LEGISLATIVE LIBRARY
JUN 15 1914
VICTORIA, B.C.

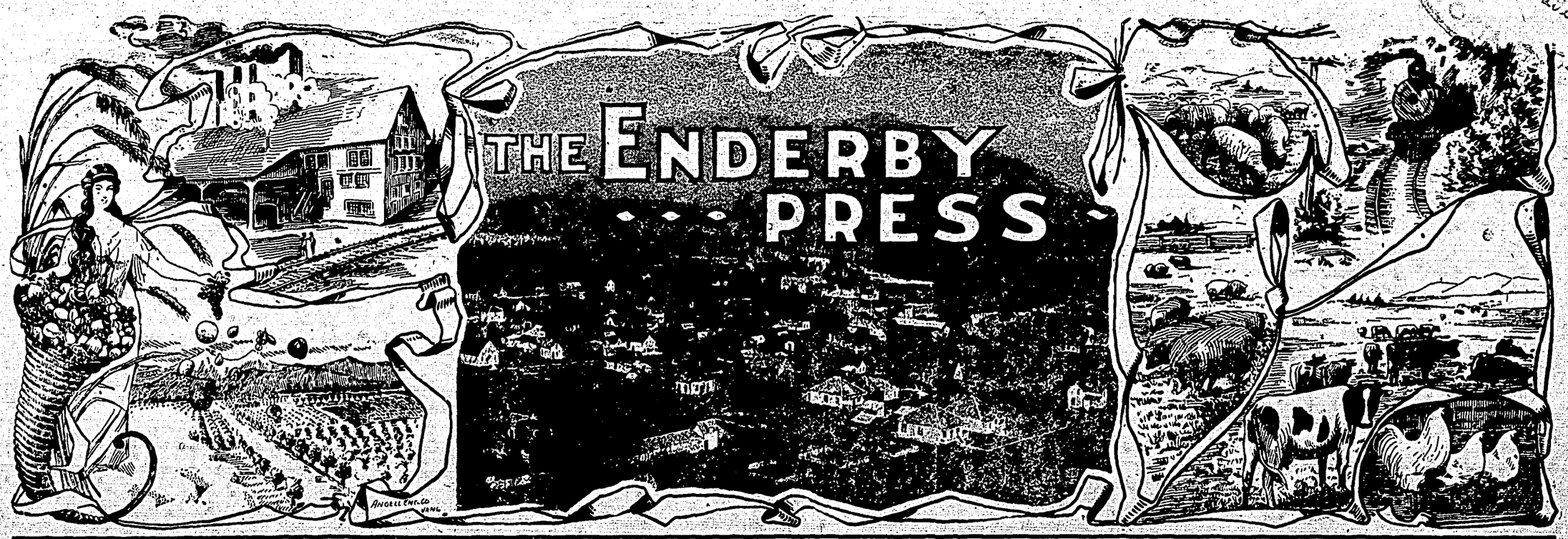

Enderby, B.C., June 11, 1914 AND WALKER'S WEEKLY Vol. 7; No. 15; Whole No. 327

Local News of General Interest and General News of Local Interest

CITY OF ENDERBY

Mrs. S. H. Speers and child left for the coast on Monday.

Mrs. Gillman will not receive on Thursday, nor again until the end of the season.

Miss Ella Mohr is enjoying a visit to her Enderby home this week, form Vernon.

Mr. A. R. Rogers, owner of the Okanagan Saw Mills, is on a visit to the property this week.

Manager Plumbly, who is taking charge of the Stepney Ranch, arrived with his family this week.

Mr. and Mrs. J. W. Gillman will leave on a month's holidays for their Alberta home next Tuesday.

A. M. Baird favored the Press with a box of delicious strawberries on Monday, the first of the season.

There are five motor boats on Mabel Lake, owned by Messrs. Abbott, Johnston, Faulkner, Baird and Warner.

The managers of the Opera House gave a free picture performance last Wednesday evening, to a crowded house.

Parish of Enderby, 1st Sunday after Trinity: Mattins, Grindrod, 10.30; Evensong, Mara, 3.00; Evensong, Enderby, 7.30.

J. H. Mohr is building a 22x35 barn on his Glen Mary property, to be finished with stalls for six cows and a team of horses.

Mr. and Mrs. F. R. Prince and Mr. and Mrs. E. J. Mack left early this week by auto on a trip to Spokane, Wash., and return.

F. Waby put on the local market this week some mommoth samples of Rollinson's telegraph cucumbers from the King Edward gardens.

The monthly meeting of the Wemen's Club will be held next Saturday, the 13th inst., at 2.30, at the home of Mrs. G. L. Williams.

Roy Wheeler and Wm. Duncan are spending the week at Victoria as delegates to the annual meeting of the grand lodge of the I.O.O.F.

Rev. Mr. Hedley and family arrived in Enderby on Friday last, and are "putting their house in order" at the Methodist parsonage.

Wm. Dorey, general superintendent of the section house supply system of the C. P. R., visited Enderby this week on a pleasure trip.

The city has received word that the $3,500 debentures for the completion of the school grounds have been sold. The price paid was 90c.

Mr. and Mrs. A. Sutcliffe left Vancouver on May 30th, for their home in England, where they are expecting to spend the next year or two.

Mrs. W. J. Wheeler and Miss Duncan left this week on a visit to Vancouver. Mrs. Wheeler will spend the summer months at the sea side.

Mr. L. Long returned from Vernon on Saturday, not entirely recovered from his injuries received in the Empire Day accident, put much improved.

A meeting of the board of directors of the Enderby Agricultural and Horticultural Society will be held in the City Hall, to-morrow, (Friday) evening, at 8 o'clock.

One cannot travel Sicamous street in the vicinity of Knight, without being attracted by the vast improvements made to their properties by Miss Forster and Mr. J. Dougall.

The citizens of Nelson are planning to hold an "Old Timers' Reunion" in that city, July 13th to the 18th. Mickey Manahan will bake bannocks, and there will be no end of a good time for all.

The five men held for trial for the killing of Berryman, on the Lumby road a month or more ago, were taken to Kamloops on Wednesday evening, there to await trial at the fall assizes.

A special meeting of the Hospital Auxiliary will be held on Friday, June 12th, in the City Hall, at 3.30 p. m. to consider the reopening of the Cottage Hospital. A full attendance is requested.

Garfield Mohr is mining in the Stewart River country, where he has interests ni several valuable gold and silver properties. He is contemplating a trip to his home this fall, at the close of the season's operations.

Manager Murrin, of the Polson, Murrin & Speers department store, says the sales of that company last month exceeded those of the previous month by more than $1,000, which indicates that there is business to be had if you get after it.

Mr. Hendrickson is sparing no pains or expense in fixing up his new barber shop on Cliff street. He has installed a revolving barber's candy-stick that is quite an attraction. The interior of his new quarters are comfortable and artistic.

Mrs. A. Buckley, displayed a fine lot of potted and bedding plants from the Armstrong nurseries, in the Crane block, the end of last week, and the way the plants were snapped up indicated how much Enderbyites are bent on making their homes beautiful.

The high school girls of Enderby played a game of ball at the recreation ground last Wednesday afternoon. They used a tennis racquet to bat with, and a tennis ball, and the score stood 411 to 602 at the end of the sixth inning, when the chalk gave out.

Methodist Church services, June 13: Morning at 11, subject, "Running the Race," evening, at 7.30, subject, "The Young Man in the Far Country," the first of a series of sermons on the Prodigal Son. Sunday school at 2 p. m. A cordial welcome is extended to all.

The Grand Bend farm, opened up by the Mack Brothers, and more recently owned by G. B. Gelling, deceased, one of the best properties in the district, has been purchased by Mr. G. Anderson, for the past year getting experience in the care of stock at the Lone Pine dairy, under the supervision of Mr. C. E. Strickland.

Mrs. T. C. Polson entertained delightfully Saturday afternoon for her little neices, Jessie and Jean Fazon, of Bellingham, Wash. The little guests were, Rena Dill, Jean Keith, Sally Walker, June Fravel, Marion Fravel, Jeanette Fravel, Kathlene Polson, Bertha Thompson Beatrice Thompson, Barrie Speers and Howard Speers.

Robert Johnstone returned to the coast this week, for medical treatment. Mr. Johnstone underwent a serious operation at the Vancouver hospital some months ago, and came home with every promise of a speedy recovery, but his condition has not shown satisfactory improvement and he returns to the hospital for further treatment.

Calgary is wild with oil excitement. In one day following the strike in the Dingman well, $50,000 was the amount paid to brokers by buyers of oil well stocks. And the money came from the pockets of the laboring men and work girls and women. Regular stock buyers do not dabble in oil stocks. It is only the unsophisticated that will bite at such bait. And every oil gusher is generally good for 100 thousand "suckers."

Frank Hassard is cleaning up his hay crop of 1913 just in time to take care of the 1914 crop. The price this year has not been as good as that of the past few years, but Mr. Hassard sold hay when the price was down before, and he knows when to let go. It has netted him $14 a ton, which, while not as profitable as $22 and $25 a ton, —pays and leaves a margin. Mr. Hassard sells from 200 to 250 tons each season, and ought to know.

Mr. and Mrs. J. C. Inch returned from a week's trip to Edgewater, B.C., last Friday, where Mr. Inch purchased a 20-acre tract of alfalfa and a fruit orchard. Edgewater is located about 30 miles from Golden. It is in the heart of a rich alfalfa belt, where the tracts are to a very large extent cut up into ten and 20-acrs, given over to alfalfa on which hogs are fattened in the field, much the same as the industry is carried on in California. Mr. and Mrs. Inch will take up their home at Edgewater, for which point they left Enderby last evening.

WELCOMED NEW PASTOR

Last Tuesday evening the young people of the Epworth League of the Methodist Church held a most enjoyable social evening to welcome their new pastor, Rev. J. W. Hedley, M. A., and his family. A large number of the members of the church and friends were present. The chair was taken by Mr. A. C. Skaling, after which an interesting program was rendered, including addresses of welcome by the chairman and by Mr. Smedley. Mr. Hedley in his reply thanked them for their kind words of welcome, and trusted that his pastorate among them might be one of great blessing, and that he might always have their heartiest enthusiasm and co-operation in the work. After the program refreshmments were served by the young people, and a social hour much enjoyed.

C. N. R. BILL WILL PASS SENATE

Ottawa, June 10.—The C. N. R. Aid Bill was given a second reading in the Senate yesterday afternoon, by a vote of 41 to 17. This ensures the passage of the measure. The 17 opponents of the bill were all Liberals.

Bread fresh from the oven every day before noon—at Joe's.

ENDERBY CONSERVATIVE MEET

A meeting of Enderby Conservatives was held in K. of P. Hall last Friday evening for the purpose of reorganizing the Enderby Association and placing it upon its feet as a working organization. In calling the meeting to order it was explained by Mr. F. H. Barnes, who took the chair, that some four weeks ago several of the Conservatives of Enderby met and decided to reorganize or organize anew the Enderby Association. He explained that it was not intended that this association should in any way interfere with the District association now organizing under the Enderby name, but would act in conjuction with the District organization when it becomes a working body, and its various ward representatives are elected. He said that it was felt by Enderby Conservatives, who had been the main support of the Conservative organization here for the past 15 or 20 years, that Enderby, as an incorporated municipality, could not reasonably be expected to, and would not, sink its identity and become a ward in any district organization. Enderby was prepared to work with and to assist the District organization, but would do so through its own organization. It was the purpose of the meeting to explain the position of Enderby in reorganizing and to invite all who wish to join the Enderby association to place their names before the executive.

Mr. C. W. Little, president of the District association, spoke at considerable length in the matter. He did not believe there was any need of two organizations, and thought that Enderby should join hands with the district and become a ward in the District association. It meant that one or the other of the organizations would have to quit, he said.

This position was held by the chairman to be untenable. When the matter had been gone into by the Enderby organizers, they put the matter before the Central District Association executive, and it was decided that the proposed organization was the best thing to do; it being felt that the Enderby city association should be continued, and that better work for the district could be accomplished by it under its independent organization than if it were to become lost as a ward in the District association.

After some discussion, applications for membership in the Enderby association were received, and the meeting adjourned.

ENDERBY SHIPMENTS

Since Jan. 1st, 1914:

Lumber	188	carloads
Hay	28	carloads
Cordwood	3	carloads
Poles	11	carloads
Fence Posts	7	carloads
Ties	61	carloads
Flour	19	carloads
Live stock	1	carload
	318	carloads

The celebrated "K" shoe—the genuine British make—is now to be found at the Enderby Supply Co's store.

BIG FRUIT CROP THIS YEAR

"The fruit crop for British Columbia for the year 1914 is now practically certain to exceed in quantity that of 1913 by about 25 per cent. Fruit crops generally will be heavy," declares Mr. R. M. Winslow, the head of the horticultural branch of the Provincial Department of Agriculture. Mr. Winslow's statement is based on confidential reports from officials throughout the various fruit districts of the Province.

Last year's fruit crop in the Province weighed 27,760,000 pounds, and brought the growers a sum of $1,033,000. This year's crop should mean that the fruit growers of the Okanagan particularly, will have at least $250,000 more to divide between them than they did last year without in any way increasing the cost of the fruit to the consumer. Better marketing facilities to prevent wastage and dumping, and the reduction of freight rates under the recent order of the Dominion Railway Board in its western freight rates decision, are expected this year to bring benefits both to the grower and the consuming public.

Apples promise from a good to a heavy crop throughout the Province, says Mr. Winslow. A few varieties are more or less off-crop, but the total production will probably be 35 per cent over last year. Pears are variable, but on the whole a medium crop. Peaches in the Southern Okanagan will be a fair but not a heavy crop. Prunes are light, but a fair crop on the coast, and medium to heavy crop in interior sections. Crab appels a heavy crop everywhere. Apricots will show a large increase over last year in the Southern Okanagan while cherries are a medium to heavy crop throughout the interior. Preserving cherries will be a good crop on the coast, but sweet cherries will be rather light in that section.

Marketing facilities are, on the whole, in good shape. The coast cities will consume the great bulk of the coast production at prices remunerative to the grower, and this year will see much larger shipments than any previous year from the interior to the coast cities. In the interior market organization has been greatly strengthened, especially by the successful launching of the Okanagan United Growers a year ago. This organization will have about 60 per cent or more of the Okanagan crops, and is aiming at a very wide distribution. In other parts of the interior co-operative organizations are at work with more or less success, though many growers feel that the time is ready for some such organization for the Kootenay as the Okanagan United Growers is for the Okanagan.

WILL RESCUE KARLUK'S CREW

The American revenue cutter Bear has been ordered to proceed from St. Michael, Alaska, to Wrangle Island, for the purpose of rescuing fifteen members of the crew of the Canadian steamer Karluk, of the Stefansson Arctic Expedition, who are marooned on that Island.

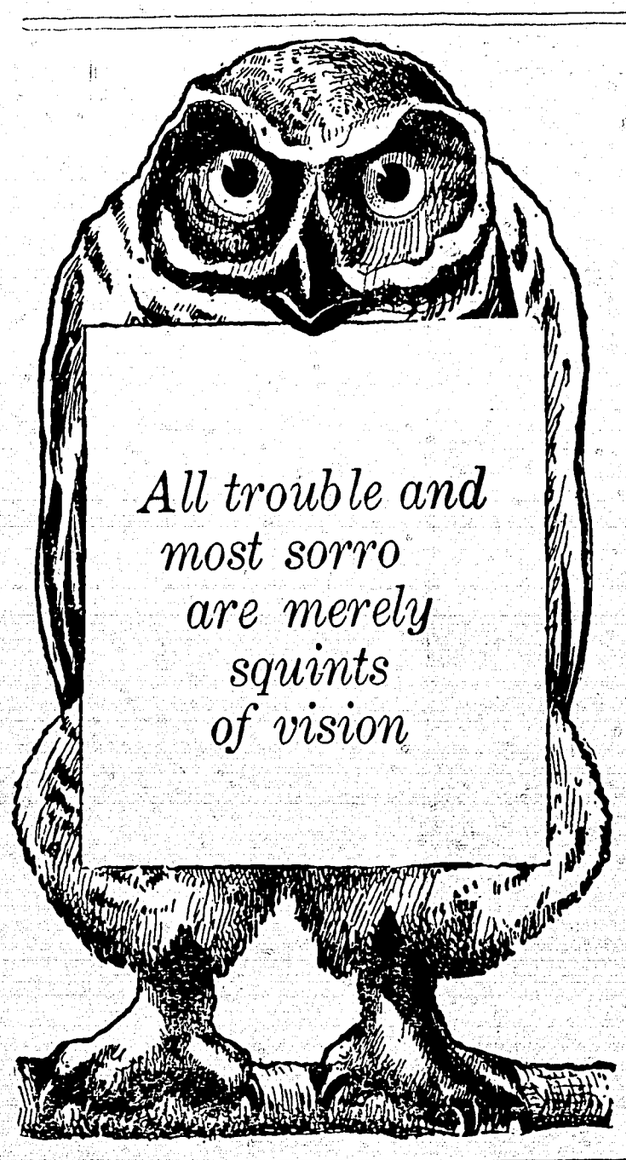

THE ENDERBY PRESS
AND WALKER'S WEEKLY

Published every Thursday at Enderby, B. C. at $2 per year, by the Walker Press.

Advertising Rates: Transient, 50c an inch first insertion, 25c each subsequent insertion. Contract advertising, $1 an inch per month.

Legal Notices: 12c a line first insertion; 8c a line each subsequent insertion. Reading Notices and Locals: 15c a line.

JUNE 11, 1914

WHAT FUTURE HAS IN STORE

One cannot travel the district adjacent to Enderby and note the vast amount of development work that is being done without realizing—in a measure at least—what magnificent potentialities the future has in store. At the present time not more than one per cent. of the possible arable land is under the plow. Only here and there are small patches producing anything. In nearly every case where settlers are located and homes are in the course of making, only a few acres have been tilled and are in crop. There are exceptions, it is true, to this rule, but the exceptions only go to prove the truth of our opening statement. When the vast majority of settlers and home-makers bring their acreage into like condition of productiveness, then, and then only, will the Enderby Dictrict come into its own.

Go in any direction from Enderby for a day's trip into the country, and you will find new acres cleared and into crop. Look in any direction and new clearings may be seen, where the brush is piled into windrows ready for burning. On the hillsides, on the benches, and in the valleys these patches of clearing—in most instances on land which has heretofore been given over to forest and bush, and therefore believed to be not fit for cultivation—are showing up the thousands of acres adjoining the clearings which are yet to be cleared and tilled.

Before these clearings were made and the possibilities of the development of the hillsides and highlands shown up, it was commonly believed that the only lands available for cultivation were the meadows and low-lands found in the bottom. And the timbered hillsides and smaller valleys leading from the main bottom land to the mountains looked most uninviting to the man in search of fruit land and land for mixed farming. In fact, one could not distinguish the arable hillsides and valleys from the mountain slopes until these recent clearings were made, and where valleys and plateaus are now showing, and hillside clearings rich in green with alfalfa, clover, or some other fodder crop growing, the eye could see only thickly timbered areas. And there was believed to be no possibility of ever bringing these vast acres under cultivation.

Now all this is changed. The clearings on Enderby Heights, and the planting of orchards, vegetable gardens and alfalfa and oat fields by Mr. Lawes and Mr. Barnes, has demonstrated possibilities in connection with these hills that were only dreamed of before. And on the hillsides and highlands in the vicinity of Glen Mary the settlers have opened up a district that is rich in future possibilities. Indeed, recent developments on the hill properties on the east and west sides of the Valley north of Enderby, have opened up a country that is more extensive, even, than that of the bottom lands, and quite as fertile. It is safe to say that these highlands now being shown up are as certain to make good, and as sure of a harvest as any acre in the Okanagan. That the highlands are going to be in demand is apparent from the popularity they have already attained to. Settlers are picking them up as rapidly as they can find open land for homesteading, and others in a position to buy are capturing all the acreage available.

In the Mabel Lake Valley the same conditions prevail. In the past season a great amount of land clearing has been undertaken, and new settlers are picking up locations as fast as they can be surveyed. On King Fisher creek, at Mabel Lake, Dominion land surveyors have just finished surveying a stretch of logged-off land that will make homes for a large number of settlers. The land covers an area of three miles in length by two in width, and is all spoken of as good land, with very light clearing. Other areas available for homesteading are being surveyed in the vicinity of Hupel, and when these are taken up, which they no doubt will be at an early date, there will be located in that valley a population that will be heard from in a year or two, when they get their lands under cultivation.

To our mind, Mabel Lake district promises as much for the future today as all that part of the Okanagan from Enderby south to Vernon promisd say twenty years ago. In the Mabel Lake district there is another Okanagan opening up It has the land, and it has the other special features that will play a prominent part in its development when they are better understood and their importance recognized.

LOOKING TO THE OKANAGAN

The Vancouver News-Advertiser in an editorial reference to the statement made last week by Mr. McNicholl, vice-president of the C. P. R., with reference to the intentions of that company to "gridiron the Okanagan," says:

"The visit of Mr. McNicholl to the Okanagan Valley was a timely journey. This is destined to become a greater traffic producing district than any other farming region of equal extent in Canada. Last year's freight business was a revelation to the Canadian Pacific head office. Now the vice-president and general manager has motored over part of the orchard area to discover that only a small portion of the available land has yet been planted, and but an insignificant fraction of the part planted is in full bearing. The statement **'We will gridiron this country with railways,'** is the result of this discovery. Other companies besides the Canadian Pacific are reaching for this traffic, and the prospects are that there will be much buusiness for all. Yet the Okanagan is only one of the many fruit-growing valleys in this province."

BRINGING IN CAPITAL

Mr. Charles Deering, of the International Harvester Company, in an article in "Tariffs, Reciprocity and Freign Trade," published by the American Academy of Political and Social Science, says: "Canada imposes a 17½ per cent ad valorem duty on mowing machines, harvesters and reapers, and a 20 per cent duty on cultivators, plows, harrows, hay rakes, drills, weeders and wind-mills. This is prohibitive, and has resulted in a wonderful growth of the Canadian implement industry. American capital and American brains have come across the border, and, with Canadian labor, have established these plants. But for the tariff this capital would have stayed at home."

WATCH THE HOME MARKET

A recent issue of the Co-operative News has this bit of sound reasoning: "The system of buying in the cheapest and selling in the dearest market involves, as a practical outcome, low wages and dear food. Labor is bought cheaply; the production of labor, passing through the hands of many middlemen, is sold back to the workers, who produced it, with those added items of profit which make it dear. Low wages and high priced commodities cause an under-demand for labor, embodying itself in unemployment."

..Another trite expression along this line comes from "Tariff, the Workers' Charter," by Ewart S. Grogan, who says, "The home market is the very bed-rock upon which the foundation of the nation's scale of production must rest, since the home market is the one market which a community can absolutely secure for itself free from outside influences."

Another from the Consular report form Dusseldorf for 1912: .."Thirty years ago Germany set up her protectionist tariff, and it is an incontestable fact that during these last thirty years Germany's progress has been nothing short of marvellous."

She Wasn't an Enderby Miss

A farmer boy and his best girl were seated in a buggy one evening in town, watching the people pass. Near by was a pop-corn vendor's stand.

Presently the young lady remarked: "My, that pop-corn smells good!" "That's right," said the gallant, "I'll drive up a little closer, so you can smell it better."

Some men spend so much time trying to wreck the business of other men that they smash their own.

Renew your subscription to The Press, and help it along

BANK OF MONTREAL
Established 1817

Capital, $16,000,000 (paid up) Rest, $16,000,000

H. V. Meredith, Esq., President
Sir Frederick Williams-Taylor, General Manager
BRANCHES IN LONDON, ENG., NEW YORK and CHICAGO.

SAVINGS DEPARTMENT

Deposits received from $1 upwards, and interest allowed at current rates. Interest credited 30th June and 31st December.

ENDERBY BRANCH A. E. TAYLOR, Manager

Fix up your House, Barn, and Outbuildings

Here are some specials in lumber while they last:

No. 2, 2x4, per thousand .....$ 13.00
No. 2 Lath, per thousand 1.75
Short Cord Wood 3.75

OKANAGAN SAW MILLS, Ltd. Enderby

Canada's Best Flour
OGILVIE'S
ROYAL HOUSEHOLD
For Bread and Pastry
At FLEWWELLING'S Feed Store

Finest in the Country

"Enderby is a charming villiage with city airs. When Paddy Murphy shook the snow of Sandon off his feet he came here, and now owns one of finest brick hotels in the country. Although Paddy is an Irishman from Michigan, he calls his hotel the King Edward. In addition to the excellence of the meals, breakfast is served up to 10 o'clock, which is an added attraction for tourists."
(Extract from Lowery's Ledge.)

King Edward Hotel, P. H. MURPHY Proprietor Enderby

JAMES MOWAT
Fire, Life, Accident
INSURANCE AGENCIES
REAL ESTATE NOTARY PUBLIC
Fruit Land Hay Land
Town Lots

The Liverpool & London & Globe Ins. Co.
The Phoenix Insurance Co. of London.
London-Lancashire Fire Insurance Co.
Royal Insurance Co., of Liverpool (Life dept
The London & Lancashire Guarantee Accident Co., of Canada.

BELL BLOCK, ENDERBY

It will cost you just one-third of a cent a pound to have your
Butter wrapped in your own neatly printed Butter Parchment, if you order from— THE WALKER PRESS

A SNAP!

FOR SALE—House and lot, 60x120; frame, one-and-one-half story, containing 9 rooms and bath; almost in centre of town and practically new; cement foundation; plastered; electric lights, bath, etc Price, $2,200; $550 cash, balance arranged. This includes furniture. A good chance for someone with a large family. or for a private boarding house, as owner has had all kinds of enquiries from people wishing rooms, but, being otherwise engaged, could not handle them. For further particulars apply, Fred Sherlow, Enderby.

OVER 65 YEARS' EXPERIENCE
PATENTS
TRADE MARKS
DESIGNS
COPYRIGHTS &C.

Anyone sending a sketch and description may quickly ascertain our opinion free whether an invention is probably patentable. Communications strictly confidential. HANDBOOK on Patents sent free. Oldest agency for securing patents.
Patents taken through Munn & Co. receive *special notice*, without charge, in the

Scientific American.

A handsomely illustrated weekly. Largest circulation of any scientific journal. Terms for Canada, $3.75 a year, postage prepaid. Sold by all newsdealers.

MUNN & Co. 361 Broadway, New York
Branch Office, 625 F St., Washington, D. C.

Enderby and School District Rate Payers Who Have to Foot the Bills

Owing to several errors and omissions having crept in in the publication of the list of Enderby city and district ratepayers last week, we are republishing the list below, with all corrections and omissions made:

REAL ESTATE TAXES

Adams, Frank A.	$ 25.84
Airth, Alexander	4.64
Airth, Caroline (Miss)	4.65
Airth, James	25.17
Attenborough, Alwyn	27.83
Attenborough, M.E. (Mrs.)	4.64
Bailey, Robert	13.25
Bailey, Robert N.	13.25
Baird, Andrew M.	86.80
Baird, Isabella (Mrs.)	9.94
Baird, James E.	25.83
Bank Montreal	519.40
Banton, Wm. E.	19.22
Barnes, Fred H.	206.01
Barrows, Wiley R.	25.17
Bates, A. Mae (Miss)	4.65
Bell, George	478.85
Bell, Florence (Mrs.)	26.50
Beattie, Andrew	33.78
Bellamy, George	4.63
Berg, Andrew	23.85
Blanchard, BeatriceL.(Mrs.)	7.95
Blanchard, Hrbert E.	82.82
Blackburn, Jane (Mrs.)	4.24
Blackburn, Richard	41.68
Blackburn, William	9.27
Binch, Richelieu H.	21.20
Birrell, Andrew D.	33.13
Bradley, Sarah J. (Mrs.)	30.47
Bovett, Charles W.	12.59
Canadian Pacific Ry	382.92
Calder, Thos. H.	17.89
Campbell, Duncan	10.60
Carefoot, Joseph H.	143.75
Carlson, Benj. J.	31.80
Carleton, Eva (Mrs.)	19.21
Carson, Robt. C.	18.55
Cedarson, Hugo	5.30
Chew Chung	25.18
Clark, Amos	9.29
Cobb, Laura (Miss)	21.85
Columbia Flouring Mills	1,033.50
Coode, John C.	402.80
Crane, John E.	96.07
Crane, Reginald	4.63
Crossman, Alan F.	4.65
Dagg, James C.	54.33
Dale, James	32.46
Dugdale, Chas. E.	11.92
Dill Bros.	106.00
Dougal, J. A.	12.60
Duncan, Mary A. (Mrs.)	37.10
Enderby Brick & Tile Co	47.70
Enderby Lawn Tennis Club	22.53
English, James C.	29.15
Evans, James E.	58.30
Evans, Joseph W.	35.77
Faulkner, Andrew A.	98.05
Flack, Walter H.	4.63
Flewwelling, H. F.	45.05
Flewwelling, Irma (Miss)	4.65
Folkard, John	17.22
Forrester, Edwin	14.57
Forester, Edith M. (Miss)	74.87
Forester, Robt. E. T.	18.55
Fortune, A. L.	13.91
Fravel, James F.	35.12
Fulton, Andrew	256.30
Funk, Florence A. (Mrs.)	15.89
Gaylord, John B.	74.85
Gibbs, Mabel R. (Miss)	49.17
Gilroy, Jacob A.	102.03
Glen, Kenneth	4.63
Golightly, Wm. H.	35.78
Gorle, Frederick T	19.88
Graham, Wm. J.	31.80
Grant, John N.	52.34
Gray, Edward G.	27.16
Greyell, Henry J.	62.93
Gunter, Abram	25.14
Hallet, Edwin	17.22
Hanson, Ole	22.52
Hartry, Samuel F.	62.94
Hartry, Agnes (Mrs.)	16.56
Harvey, Eva E. (Mrs.)	70.22
Hassard, Frank	11.26
Hatcher, Isabel H. (Mrs.)	72.38
Hawkins, Chas. E.	27.16
Hendrickson, E. F. (Mrs.)	78.8
Henniker, Mabel (Mrs.)	4.64
Higginson, John	14.75
Hughes, Bessie (Mrs.)	153.04
Hughes, Geo. T.	20.86
Hutchison, Margaret (Mrs.)	9.28
Hoffman, Edward B.	4.63
Jalland, Elizabeth (Mrs.)	25.18
Jaquest, Henry P.	62.28
Johnson, Carl	23.85
Johnson, Jas. F.	58.33
Johnson, Cathrine J. (Mrs.)	10.60
Johnston, Albert E.	35.11
Johnstone, Jane (Mrs.)	39.08
Johnstone, John S	15.91
Jones, Robt	37.10
Keith, Harry W.	127.85
Keith, May B. (Mrs.)	10.60
Kellington, Chas. W.	14.58
Lawes, Eva (Mrs.)	21.20
Lawes, Geo. R.	344.37
Linton Estate	30.48
Logan, (Mrs.)	4.63
Lindrot, Hugo	12.59
Long Loule	17.22
Lucas, John C.	18.55
Lundberg, Carl	9.28
Lundberg, Frederick	28.49
Mack, Edward J	125.88
MacKay, Jane (Mrs.	76.85
Mansel, George W.	9.27
Marois, Edmund	19.88
Marshall. A. T.	20.53
Martin, James	37.10
Matthews, Ann (Mrs.)	13.25
Methodist Church	84.79
Miller, John	25.17
Mitchell, Hugh	13.25
Mitchell, Hugh A.	5.95
Moffet, Francis V.	245.55
Mowat, James	86.38
Murphy, Patrick H.	353.78
Munroe, Geo. E.	10.60
McArthur & Harper	6.62
McLeod, Donald A.	11.27
McMahon, James	38.42
McMahon, Elizabeth (Mrs.)	25.17
McMahon, Ernest	4.65
McMahn, John	15.32
Neill, Horace	4.65
Nichol, James	21.20
Okanagan Telephone Co	76.85
Okanagan Saw Mills Ltd	2,303.65
Olford, Bruce	17.83
Oppertshauser, Charles	38.42
Paradis, Caroline (Mrs.)	39.75
Paul, Andrew	39.08
Peel, Robert E.	75.52
Pell, Wm. C.	46.38
Piper, Cecil G.	49.03
Polson, John R.	10.59
Polson, Thos. C.	34.45
Plson, Victor	4.65
Polson, Wm. S.	48.13
Polson, Smuel	1,813.41
Pound, Alice J. (Mrs.)	30.47
Pound, William	18.55
Powers, Geo. L.	14.57
Price, Albert R.	10.60
Prosser, Frederick R.	7.95
Pyman, Martha J. (Mrs.)	49.03
Reeves, Elizabeth (Mrs.)	62.27
Richards, James C.	17.23
Richardson, Morril E.	11.93
Rodie, Thos. E.	4.64
Robinson, Geo. S.	26.50
Robinson, Mary (Mrs.)	10.60
Robinson, Tom	18.55
Robinson, Ruth (Mrs.)	5.96
Ronald, Wm. E.	20.54
Rosoman, Amy (Mrs.)	13.25
Rosoman, Blanche (Mrs.)	15.90
Rosoman, Graham	76.85
Russell, Wm. A	10.60
Rutherford, Mary J. (Mrs.)	27.83
Ruttan, John L.	104.30
Sam Bow	27.83
St. Andrew's Church	2.65
St. George's Church	125.21
Schultz, Gustavius	15.24
Sewell, Elizabeth (Mrs.)	22.52
Sharpe, Geo. R.	368.35
Sherlow, Frederick	15.90
Simard, Edward	24.51
Simard, Mary (Mrs.)	18.55
Singre, John A.	14.57
Sing Kee	17.23
Skanes, E. (Miss.)	4.64
Skejie, Simon O.	19.87
Smedley, Geo. H.	84.80
Smithers, Andrew J.	22.51
Sparrow, Elizabeth (Mrs.)	25.34
Speera, Sidney H.	29.15
Stoward, Robert H.	37.10
Stoward, George	14.58
Stoward, Mary E. (Mrs.)	18.55
Stroulger, Kathleen (Miss)	9.94
Sutcliffe, Alfred	31.80
Swan, Henry	30.47
Taylor, Harold	4.64
Teece, Samuel	351.12
Taylor, William	9.27
Turner, Francis T	4.63
Turner, Violet H. (Mrs.)	20.55
Utas, John	11.93
Vogel, Rex	12.57
Walker, Anna G. (Mrs.)	13.25
Walker, H. M.	152.39
Wallace, William	32.46
Ward, Richard & John C.	121.90
Wheeler, Wm. J.	111.96
Wheeler, Edward C.	29.81
Wheeler, (Mrs.)	10.07
Williams, Guy L.	50.36
Wilson, Albert	36.44
Wilson, Herbert R.	42.40
Woods, Wm. J.	176.88
Worthington, Hugh H.	39.09
	$15,746.17

EXTRA-MUNICIPAL SCHOOL DISTRICT

Armstrong, S. F.	$ 2.08
Avery, Chas. G.	24.85
Backhaus, R. G.	2.80
Byrnes, Mary L. (Mrs.)	14.88
Barnum, A. W.	5.60
Beattie, Andrew	2.62
Bechervais, John J	7.53
Bigge, C. F.	2.80
Bogert, John E	26.42
Brash, Thomas	49.84
Brown, George	6.83
Bryant, Thomas A.	38.29
Byrnes, Henry	12.77
Bucknel, George	11.20
Cameron, Benj. J.	13.03
Cameron, Robt. B. McL	4.20
Campbell, Alexander	16.80
C. P. R. Co	16.19
Chadwick, Robt.	2.80
Chaqman, Percival W	5.46
Davies, Horatio G	1.68
Dodge, H. D.	1.33
Dunwoodie, Merlin C	11.73
Dunwoodie, Joseph	12.60
Elliott, Hezekiah	17.95
Ellison, James	6.30
Enderby Brick & Tile Co	12.60
Flack, Walter H.	1.05
Flewwelling, H. F.	7.88
Forster, Robt. E. T.	32.06
Frei, Peter J	5.78
Garden, Chas	12.60
Gardner, John	5.60
Gibbs, Mabel R. (Miss)	12.60
Gilroy, Jacob A	11.55
Glen, (Mrs.)	12.12
Gosnell, Wilfred B	2.80
Greaves, L. C.	18.20
Grindon, Henry	5.60
Gunter, Abram	32.48
Johnson, James F	10.92
Johnston, G. B.	10.15
Lawes, Geo. R.	4.20
Leroy, Lafayette	8.40
Lucas, George	17.50
Marwood, David	8.75
Moffet, Francis V.	15.40
Mohr, C. D.	12.53
Murdock, W. F.	17.15
Murphy, Patrick H.	50.40
McKay, John	10.67
McKee, Harvey	14.00
McMahon, G. E.	1.00
Nelson, Chas. M	12.25
Newberry, D. W.	14.43
Polson, Samuel	67.21
Preston, Henry A	8.33
Proctor, L. J.	14.42
Rice, Sadie M. (Mrs.)	17.15
Roberts, Robert	2.63
Roberts, Samuel	3.68
Scott, James	9.10
Sharpe, Geo. R.	6.30
Simpson, R. B. (Miss)	3.15
Smedley, Geo. H.	9.98
Spear, Richard J	2.66
Stebbings, W. Frederick	3.22
Strickland, Bertha (Mrs.)	72.59
Stroulger, Kathleen (Miss)	2.62
Teece, Samuel	153.13
Teece, Herbert	11.20
Tibbetts, Octavius D	14.70
Waby, Frederick	7.35
	$1,109.39

LOCAL IMPROVEMENT RATES

Bank of Montreal	36.52
Bell, George	121.61
C. P. R. Co	124.04
City of Enderby	29.19
Coode, John C.	31.40
Columbia Flouring Mills	98.63
Crane, John E.	10.95
Dill Bros	21.91
Fulton, Andrew	72.69
Gilroy, Jacob A.	19.72
Keith, H. W.	21.91
Murphy, Patrick H.	92.43
Polson, Samuel	120.47
Adams, Frank A.	9.12
Sharpe, George R.	14.89
Walker, H. M.	21.91
Ward, Richard & John S.	18.26
	$ 865.68

Since Mr. Crane received at the Enderby Music Store the new samples of wall papers and cretons to match he has been rushed with orders. He is showing the finest line ever seen in the West, and at prices that one cannot get in any of the ordinary paper supply houses.

Concrete is the best building material

It needs No Repairs — Canada Cement — Its use means Economy

Canada Cement

makes the most satisfactory concrete. Get my prices before placing your order for Concrete Blocks, Brick and Tile. I carry a full line for every purpose, or can fill special orders promptly.

J. S. JOHNSTONE, Enderby

ENDERBY HARDWARE CO.

Are in receipt of a nice line of *Oil Stoves for Hot Weather*

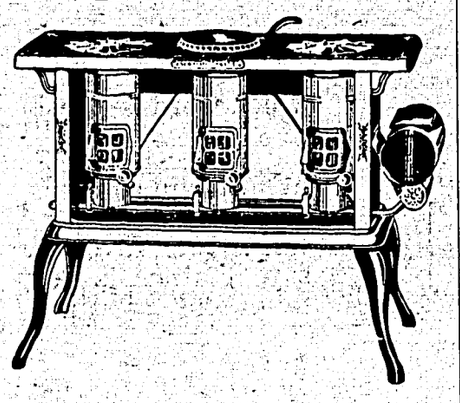

Junior Oil Stove, 1 Burner $3.50
Perfection, 2 Burner 11.00
Perfection, 3 Burner 14.00
Oven for Stove $3.75 (with glass door)

We sell Royalite Coal Oil for our Stoves, per gal. 35c

We have **Lawn Mowers,** $5.50, 6.00 and $8.00

Grass Catchers at $1.35 Lawn Sprinklers, 35c, 50c and $1.50

Rubber Hose, 15c foot (good hose); Better Quality, 20c foot

ENDERBY HARDWARE CO., in Enderby Hotel Block

Oven is a wonderful baker. That's because the heat flues completely encircle it.

McClary's Kootenay Range satisfies the most exacting cook on every point. Let the McClary dealer demonstrate the fact. 55

SOLD BY MURRIN HARDWARE CO., Limited

China, Crockery and Glassware

Pretty Presents for June Brides

In Fancy China Dinner Sets, Tea Sets, Cups & Saucers as you require them. Cut and Plain Water Sets; in fact, it is our aim to keep everything in this line that you may require, and at prices that are RIGHT.

ENDERBY MUSIC STORE J. E. Crane, Prop.

A STRATHCONA STORY

Lord Strathcona often declared that a Scotsman, though he spent his life abroad, ever remains a Scotsman, and the ubiquity of the race was a favorite conversational theme with him. To illustrate it he told of a Scotsman in Shanghai who betted an incredulous Southerner that he would discover a brither Scot in every Ship in the harbor. Going to each ship in turn and shouting "Are you there Mac?" into the engine-room, he got "Aye, aye" as answer every time.

E. J. Mack

Livery, Feed & Sale Stables
ENDERBY, B. C.

Good Rigs; Careful Drivers; Draying of all kinds.

Comfortable and Commodious Stabling for teams.

Auto for Hire

Prompt attention to all customers

Land-seekers and Tourists invited to give us a trial.

When in need of printed letterheads, envelopes, shipping tags, etc., let the Walker Press do it. We've the cuts.

SECRET SOCIETIES

A.F.&A.M.

Enderby Lodge No. 14 Regular meetings fire Thursday on or after the full moon at 8 p. m. in Oddfellows Hall. Visiting brethren cordially invited.

GRAHAM ROSOMAN W. M. JNO. WARWICK Secretary

I. O. O. F.

Eureka Lodge, No. 60 Meets every Tuesday evening at 8 o'clock, in I. O. O. F. hall, Metcalf block. Visiting brothers always welcome.

W. H. LOGAN, N. G.
JAS. MARTIN, V. G.
R. E. WHEELER, Sec'y.
GEO. BELLAMY, Treas.

ENDERBY LODGE

No. 85, K. of P.

Meets every Monday evening in K. of P. Hall. Visitors cordially invited to attend.

T. C. CALDER, C. C.
C. E. STRICKLAND, K.R.S.
R. J. COLTART, M.F.

Hall suitable for Concerts, Dances and all public entertainments. For rates, etc., address, G. G. CAMPBELL, Enderby

PROFESSIONAL

A. C. SKALING, B. A.
Barrister, Solicitor, Notary Public.
Money to Loan
BELL BLK. ENDERBY, B.C.

DR. H. W. KEITH,
Office hours: Forenoon, 9 to 10:30
Afternoon, 3 to 4
Evening, 6:30 to 7:30
Sunday, by appointment
Office: Cor. Cliff and George Sts. ENDERBY

G. L. WILLIAMS
Dominion and Provincial Land Surveyor
BELL BLOCK ENDERBY, B.C.

John Johnson
SALMON ARM, B. C.
Box 644 Phone 6H
Licenced Auctioneer. Sales attended to promptly. Terms on application, or through the Walker Press.

A. E. West, ladies' and gentlemen's tailor, cleaner and presser, is now ready for business in the old Walker Press office, and is prepared to guarantee all work placed in his hands.

POLSON, MURRIN & SPEERS
DEPARTMENT STORE

MEN' SUITS

Men's Suits—
Regular $12 to $15:
Special at 6.45

Men's Suits—
Regular $16 to $20:
Special at 7.95

A few more 20th Century High-Class Suits AT HALF-PRICE while they last.

SATURDAY SPECIALS

YOU MUST COME QUICKLY!

Men's Hats

Men's High-Grade Felt Hats; regular $3 to $3.50 SPECIAL at 1.25

Saturday only FREE a pound of 40c black Tea with each $3 purchase.

Polson, Murrin & Speers, Department Store, Enderby
Successors to the Polson Mercantile Co.

We're now in the Linotype Class of Printers

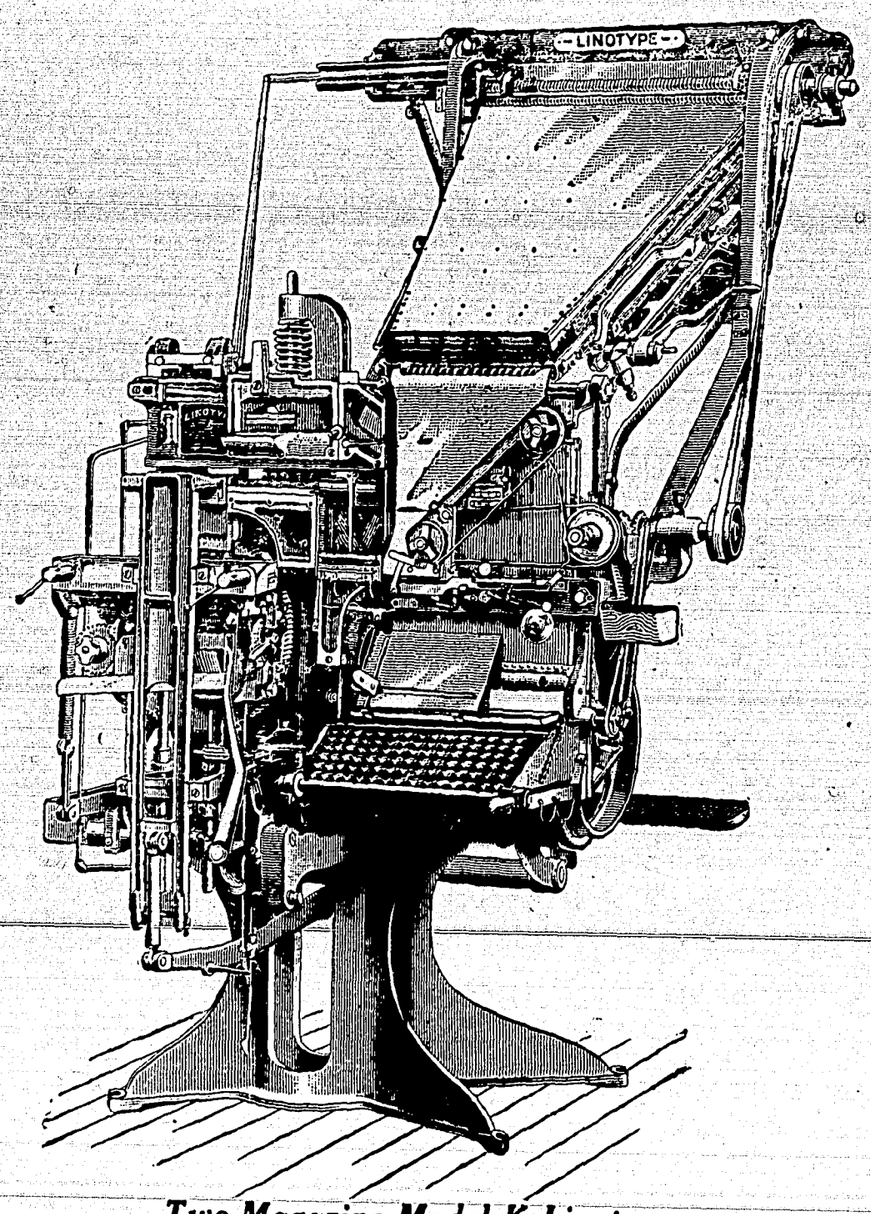

Two-Magazine Model K Linotype

THE PRINTING PLANT O THE WALKER PRESS IS FULLY EQUIPPED TO HANDLE ALL CLASSES OF COMMERCIAL JOB PRINTING.

LOOSE LEAF BILLHEAD
DUPLICATE BILLING FO MS
LETTERHEADS
ENVELOPES
STATEMENTS
ALL LINES OF RULLED ND UNRULLED WRITING PAPER
PRICE LISTS
BOOKLETS
CIRCULAR LETTERS
DODGERS
POSTERS
WINDOW CARDS
WEDDING CABINETS
WEDDING CAKE BOXES AND CARDS
FINANCIAL STATEMENT
BALL PROGRAMMES
INVITATIONS
VISITING CARDS
MATING LISTS
BUTTER WRAPPERS

HAVE YOUR PRINTING DONE IN THE HOME TOWN.

THE WALKER PRESS

Sinning Against Your Home Town

BARGAINS—THOSE AT HOME AND IN THE CCATALOGUES

A real bargain is securing an article at a lower price than its original selling cost.

A fake bargain is when you are paying its real selling price under the delusion that it has been reduced

Most every piece of goods handled by your local merchants is made to sell at a definite price—based no value.

When goods are sold at reduced prices, it is generally because the dealer prefers to get his original investment out of them, rather than wait for a profit.

In the mail order bargains this is different because the goods are generally made to sell at a bargain their original value being based on how cheap they can be made to sell at a profit.

In getting a bargain, one should not see how *cheap* one can get it, but how *good the value.*

You know that your local merchants handle reputable goods—goods that have a trade-mark which stands for the manufacturer's pledge of faith to the public.

Your dealer handles these goods because he can sell them to you knowing that they are the best.

Ever notice whether you can get these same goods from the mail order houses? In the mail order catalogues, you will find listed everything that is made. You will find stoves that *look* just like the ones your local dealer carries—*exact* in every particular, except the *name.* It's the same way with furniture, clothes, hats, home furnishings, etc.

Possibly you will run across a a well-known article, but it is there only to lend an air of merit to the thousands af unknown and unnamed articles This is for the purpose of association.

This well-known article was probably purchased in limited quantities, just to be able to make good if you insistd on purchasing it, instead of similar articles of their own manufacture.

It is only natural, while perusing the glittering pages of the gaudy mail order catalogues, to base your estimate of the goods described by the goods *illustrated.*

That is why you find so many illustrations, drawn by artists whose imagination is far in excess of reality. Then on every other second or third page, you see "special bargain" in huge type, followed by a lurid description of an article selling at a ridiculously low price.

And the object of such a bargain is so ridiculously simple: association again. You naturally think, or at least you are supposed to think, that all the articles in the catalogue are priced accordingly.

But don't forget: The mail order houses are in business to make money—not to lose it. And, generally, when the goods are delivered it will be found that the lower the price *the lower the value.*

(Anything to get the money.)

GOD GETS BLAMED

When the Titanic was lost at sea through the madness of her captain in racing against time with floating icebergs in the path of his mighty ship, many people who felt themselves in a position to know, blamed God. And now we hear the same kind of talk in connection with the ramming of the Empress of Ireland in the St. Lawrence. A despatch from Toronto states that the high officers of the Salvation Army look upon the loss of the Empress and so many Army officers on board as a direct message of criticism from Above, and the Army will try to find the flaw in itself which caused it to merit divine rebuke. Poor, God. For all of man's foolhardiness He has to take the blame.

ENDERBY AND DISTRICT CONSERVATIVE ASSOCIATION

A meeting of the members of Ward Eight (8), which includes all members residing within the city limits of the above association, will be held in the K. of P. Hall on Friday evening, June 12th, 1914, at eight (8) p. m. for the purpose of electing Councillors to represent the Ward.

H. G. DAVIES,
Secretary Enderby & District Conservative Association.

Art Clothes—made-to-measure only—See samples and leave measure at Enderby Supply Co's.

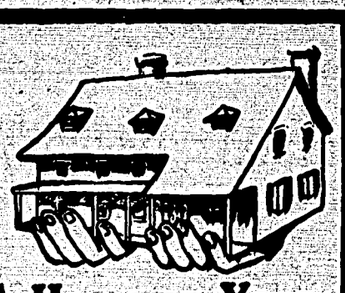

A House on Your Hands

Did you ever figure out how small a percentage of our population pass your house where they could see a "To Let" sign, or how large a percentage read our paper? Good tenants are not the kind that have time to waste in going around looking for signs. They look in our Want Ads.

If you have a house on your hands, a "House to Let" ad. will bring them to you.

Keeping Out of the ruts

The blood of a business which advertises regularly runs faster than the blood of a business which rarely or never opens its mouth.

Men who get in ruts grow like ruts. There is a certain comfort and contentment in routine—which word is very close to "rutine."

Advertising compels the advertiser to bestir himself—and since he advertises to YOU, since he wants your favor and custom, you can be pretty sure that he is doing his best to deserve your favor and custom.

A NOTE TO THE PUBLIC

Give your custom to those who solicit it—who tell you they want it; who tell you what they are doing in your interests. Encourage those who serve you best and most.

Shop where you are Invited to Shop

NO ALUM MAGIC BAKING POWDER READ THE LABEL

SUNSHINE SERMONS

Cheerful Guidance to a Happier, Healthier Life
By the Philosopher-Physician
GEORGE F. BUTLER, A. M., M. D.

Exercise is essential to the preservaton of health, while inactivity is a potent cause of degeneration. The vigor and equality of the circulation, the functions of the skin, are all promoted by muscular activity, which thus keeps up a proper balance and relation between the important organs of the body. In youth the vigor of the system is often so great that if one organ be sluggish another part will make amends for the deficiency by acting vicariously and without any consequent damage to itself. In old age the task cannot be shifted from one organ to another; the work allotted to each sufficiently taxes its strength, and vicarious action cannot be performed without mischief. Hence the importance of maintaining, so far as possible, the equable action of all the bodily organs, so that the share of the vital processes assigned to each shall be properly accomplished. For this reason, then, exercise is an important part of the conduct of life in old age, but—and this is a very important point—discretion is absolutely necessary. An old man should discover by experience how much exercise he can take without exhausting his powers, and should be careful never to exceed the limit. Old persons are apt to forget that their staying powers are much less than they once were, and that while a walk of two or three miles may prove easy and pleasurable, the addition of the return journey of similar length may seriously overtax the strength.

(Copyright, 1910, by W. G. Chapman.)

Vernon Greenhouses

L. S. GRAY, Florist

Bedding Plants

NOW READY

SPLENDID LOT OF ASSORTED GERANIUMS, NO. 1; Price $1.50 per dozen.

LARGE VARIETY OF ANNUALS —STOCKS, ASTERS, PETUNIAS PANSIES, Etc. BEST SORTS ONLY —25c per dozen.

ROSES, DAHLIAS, HOLLY HOCKS, Etc.

TOMATOES and other vegetable plants.

Phone 224

Mail orders receive prompt attention.

Fresh Meats

If you want prime, fresh meats, we have them. Our cattle are grain-fed and selected by our own buyers from the richest feeding grounds in Alberta, and are killed and brought to the meat block strictly FRESH.

We buy first-hand for spot cash, s can give you the best price possible

G. R. Sharpe,

ENDERBY, B. C.

People of Enderby

When you buy bread buy the best, and make sure that it is made in Enderby, and made by a white man. Joe Doerflinger is trying to build up a permanent, well-kept and safe bakery business in Enderby. Don't you think it is worth something to the town to have an establishment of this kind? Then do your part to encourage such an enterprise.

Picking and Packing of Strawberries and Raspberries for the Markets

The Horticultural Branch of the Department of Agriculture, Victoria has issued the following rules for picking, grading and shipping strawberries and raspberries:

Strawberries

1. Make pickings as soon as the color of the berries indicates the proper market maturity. For long express shipments pickings should be made when berries show about one-third color, the degree of color depending on the distance of the market.

2. Make frequent pickings, going over the vines on alternate days. Immediately after a period of rain go over the whole patch, cleaning up all the fruit and sending the fruit that is fit to the cannery.

3. Pick in the cool part of the day if possible, and do not allow the fruit to stand in the sun or dust after picking. Carry the stands to the packing shed at once after they have been filled.

4. Each picker should be provided with stands holding six cups. Remove the berries from the vine by breaking the stem over the forefinger in giving the berry a little side motion. Do not injure the berry in any way, either by pressure or by tearing it loose from the calyx or "hull." Pick the vines clean and place soft berries in separate cups for the cannery, throwing the culls away.

5. Pack the berries in a cool shed having plenty of light. Before packing remove the berries from the picking cups, placing them upon a cloth-covered packing frame. Be sure the berries are perfectly dry before packing. Forcing currents over the berries while they are upon the frames removes all moisture, brings out the lustre on the fruit and leaves it in a cool condition.

6. Use experienced packers. For long distance shipments make at least three grades: A—Distant market grade, using only sound, partially colored fruit. B—Local market grade, using sound and well-colored fruit. C—Cannery grade, which includes a good quality of ripe fruit. All berries showing the least indication of decay or deterioration are culls and must be thrown away. Such berries will spoil the rest of the crate.

7. To determine the proper color that berries should have for long distance shipment by express, the best plan is to study the train schedules and determine the amount of time it will require the berries to arrive at their destination. Pick several cups of berries at different stages of maturity and place them in a temperature of 65 deg. At the end of the given time inspect the berries and determine which is in the best shape. For this test the cups should be wrapped up in newspapar, and the time of the test should be two or three days over the actual train time.

8. When packing for market use uniform size of berries, placing them in clean, new cups. Have the top layer of berries come slightly above the outside edge of the cups and have the rows faced evenly so as to give an attractive appearance.

9. As soon as packed, place the cups in the crate and keep in a cool place. In nailing on covers use four nails to the cleat. Do not nail superfluously, as it irritates the customer, and deflects from the packer's reputation.

10. Cool the berries down to 60 deg. before shipping. This may be done by leaving the fruit in the night air and shipping in the morning.

Raspberries

1. Pick the berries as soon as the fruit will slip off the core without crumbling or smashing. Every berry that is red must come off the vine.

2. Packers must use small carriers attached to the waist so as to hold the cups. Pick directly into the shipping cup and never transfer from one receptacle to another any raspberries that are to be shipped. Have a separate cup for cannery berries. Throw away any berries showing decay. Do not put one over-ripe berry in the shipping cup as it will spoil the rest and the market condition of the whole crate will be ruined.

3. Berries should not be picked while the bushes are damp, either from dew, rain or fog, except for cannery purposes.

4. See that the cups are filled full, having all the corners filled to the top.

5. Pickers must not pinch the berries, nor hold them in the hand to be crushed. The berry should be taken firmly between the forefinger and the thumb, with a lateral twist removed from the core and placed directly into the shipping cup. Pinching makes a red discoloration after the berry has been on the market a few days, which is followed by premature softening and decay.

6. As soon as picked place the cups in the crate in a cool place. Never allow berries to stand in the sunshine or dust after being picked. For express shipments cool the berries to 60 deg. by fanning with night air and ship the following morning.

EDWIN SMITH.

ADVICE TO GIRLS

Wildness is a thing which girls cannot afford to indulge in, says an unknown critic. Delicacy is a thing which, once lost, cannot be recovered. No art can restore the grape its bloom. Familiarity without confidence, without regard is destructive to all that makes woman exalting and ennobling. It is the first duty of a woman to be a lady. Good breeding is common sense. Bad manners in a woman is immorality. Awkwardness may be ineradicable; bashfulness is constitutional; ignorance of etiquette is the result of circumstances. All can be condoned and not banish men and women from the amenities of their kind. But self-possessed, unshrinking and aggressive coarseness of demeanor may be reckoned as a serious offense, and certainly merits that mild form of restraint called imprisonment for life. It is a shame for a woman to be lectured on her manners. It is a bitter shame that she needs it.

Do not wish to dance with the prince unsought; feel differently. Be sure you confer a favor. Carry yourself so lofty that men will look up to you in regard, not at you in rebuke. The natural sentiment of man toward woman is reverence. He loses a large means of grace when he is compelled to account her a being to be trained in propriety. A man's ideal is not wounded when woman fails in worldly wisdom; but if in grace, in tact, in sentiment, in delicacy, and in kindness she should be found wanting, he receives an inward hurt.

Talcum Days

Red Rose Talcum Powder prevents sunburn, tanning and chapping of the skin; keeps the face and hands soft and dainty; adds to the pleasure of life out-of-doors, in sunny Okanagan.

A. REEVES

Druggist & Stationer

Cliff St. Enderby

CANADA'S VAST RESOURCES

The potential agricultural resources of Canada are indicated by the fact that not more than 2.6 per cent of the total land area of the nine provinces is now under cultivation. This is one of the interesting statements in a bulletin just issued by the census and statistics branch of the department of trade and commerce.

The area under cultivation is given as 36,000,000 acres. Only about 31 per cent of the area now occupied as farm land is at present under cultivation. In B. C. only 1.12 per cent is occupied, with 20 per cent cultivatable.

Peabody Overalls—They are made to fit and wear. Enderby Supply Co., Euderby Agents.

UNION BANK OF CANADA

Are Your Children Learning to Save Money?

Each maturing son and daughter should have a personal Savings Account in the **Union Bank of Canada,** with opportunities to save regularly, and training in how to expend money wisely. Such an education in thrift and saving will prove invaluable in later life.

Enderby Branch, J. W. GILLMAN, Manager

WATER NOTICE

APPLICATION for a licence to take and use water will be made under the "Water Act" of British Columbia, as follows:

1. The name of the applicant is Rosario Simard.

2. The address of the applicant is Hupel, B. C.

3. The name of the stream is not known. The stream has its source in Hidden Lake, flows in a northerly direction, and empties into Shuswap River about four miles from Mabel Lake.

4. The water is to be diverted from the stream on the west side, about 2,000 feet from Shuswap River.

5. The purpose for which the water is to be used is domestic.

6. The land on which the water is to be used is described as follows —Fractional NW. ¼ section 8, lying north of the Shuswap River and S. 1-2 of SW. 1-4, Section 17, Township 19, Range 6, West 6th Meridian.

7. The quantity of water applied for is as follows: 50 miner's inches.

8. This notice was posted on the ground on the 21st day of May, 1914.

9. A copy of this notice and an application pursuant thereto and to the requirements of the "Water Act" will be filed in the office of the Water Recorder at Vernon. Objections may be filed with the said Water Recorder, or with the Comptroller of Water Rights, Parliament Buildings, Victoria, B. C.

ROSARIO SIMARD,
Applicant.

Wing Lee Company

LONG LOUIE, General Manager

Contractor in

Chinese Labor

Land Clearing a Specialty

All classes of labor supplied

TIME TABLE

In effect on Okanagan Branch of C. P. R., from June 1, 1914:

Southbound		Northbound
10.55 lv	Sicamous	ar. 17.00
11.26	Mara	16.15
11.40	Grindrod	15.59
11.54	Enderby	15.44
12.20	Armstrong	15.15
12.28	Realm	15.07
12.38	Larkin	14.55
13.05	Vernon	14.30
13.25 ar.	Okanagan Ldg	lv. 14.15

H. W. BRODIE, *Gen. Pas. Agt. Vancouver* — JNO BURNHAM, *Agent Enderby*

If you have land to sell

List it with me. If you want to buy land, see me.

My new booklet descriptive of the Mara District is now out. GET ONE.

Chas. W. Little

Eldernell Orchard, Mara, B.C

Norman Grant

BUILDER & CONTRACTOR

Plans and estimates Furnished

Dealer in Windows, Doors, Turnings, and all factory work. Rubberoid Roofing, Screen Doors and Windows

GLASS CUT TO ANY SIZE

We represent S. C. SMITH CO., of Vernon

Russell Street Enderby.

Paint! Paint!

Nature has done her very best towards giving us the prettiest home-town in the Okanagan Valley. A little paint judiciously applied will complete the picture. . . . . Special cut prices on all outside painting orders placed with us during the month of June. . . . . .

C.G.PIPER City Decorator

SYNOPSIS OF COAL MINING REGULATIONS

Coal mining rights of the Dominion in Manitoba, Saskatchewan and Alberta, the Yukon Territory, the Northwest Territories and a portion of the province of British Columbia, may be leased for a term of twenty-one years at an annual rental of $1 an acre. Not more than 2,560 acres will be leased to one applicant.

Application for a lease must be made by the applicant in person to the Agent or sub-Agent of the district in which rights applied for are situated.

In surveyed territory the land must be described by sections, or legal sub-divisions of sections, and in unsurveyed territory the tract applied for shall be staked out by the applicant himself.

Each application must be accompanied by a fee for $5 which will be refunded if the rights applied for are not available, but not otherwise. A royalty shall be paid on the merchantable output of the mine at the rate of five cents per ton.

The person operating the mine shall furnish the Agent with sworn returns accounting for the full quantity of merchantable coal mined and pay the royalty thereon. If the coal mining rights are not being operated, such returns should be furnished at least once a year.

The lease will include the coal mining rights only, but the lessee may be permitted to purchase whatever available surface rights may be considered necessary for the working of the mine at the rate of $10.00 an acre.

For full information application should be made to the Secretary of the Department of the Interior, Ottawa, or to any Agent or Sub-Agent of Dominion Lands.

W. W. CORY,
Deputy Minister of the Interior.

N.B.—Unauthorized publication of this advertisement will not be paid for.

ROYAL YEAST MAKES PERFECT BREAD

When You think Groceries You think 'Billie' Woods

Take advantage of our Gallon Specials this week

GALLON SPECIALS

APPLES,	50c
BLUE BERRIES,	75c
APRICOTS,	75c
PEARS,	75c
PUMPKIN,	50c

All who have tried our Enderby-cured hams and bacons have become steady patrons, and they recommend it to their friends—that speaks for itself.

W. J. Woods

CITY OF ENDERBY

TENDERS are hereby invited for the construction of 1355 lineal feet of 4-ft. sidewalk, including crossings; 725 ft. of same, with three crossings, to be on Baird's lane, and 630 ft., with three crossings, on George street. All material will be furnished by the city, and work must be done to the satisfaction of the Board of Works.

The lowest, or any, tender will not necessarily be accepted.

Tenders must be enclosed in sealed envelopes, marked "Tender for Sidewalk," and delivered to the undersigned not later than 7.30 p. m. on Monday the 15th inst.

GRAHAM ROSOMAN,
City Clerk.

City Hall, June 8th, 1914.

The Way to Feel Better

"Mamma, I'se got a stomach ache," said Nellie Bly, aged six.

"That's because you've been playing hard with your stomach empty. You would feel better if you had something in it."

That afternoon the minister in his rounds called at Nellie's home, and in the course of conversation remarked that he had been suffering all day with a severe headache.

"That's because it's empty," said Nellie. "You'd feel better if you had something in it."

Okanagan Valley will Have Direct Telegraph Service to Vancouver

The Vancouver Province gives this important piece of news, as showing the determination of the C. P. R. to bring the Okanagan into close touch with Vancouver and the coast cities, by wire:

"Direct telegraph service to all points in the Okanagan from Vancouver will be furnished within the next two weeks by the C. P. R. in line with arrangements recently completed for extending its wire system south of Vernon to Kelowna The railway company has leased a wire from the Okanagan Telephne Company, which will obviate the relaying of messages over the Dominion Government's line.

"Mr. James F. Richardson, superintendent of telegraphs for the British Columbia division, states that with the new rail connections afforded, between the Boundary districts and the Okanagan via the Kettle Valley railway, the need of a direct service has been made imperative. He announced that the leasing of a wire was only a temporary arrangement as the C. P. R. intended to build a new line later on south of Vernon, along the shore of Okanagan Lake to Penticton. While the new toll schedules have not yet been prepared, he said that a reduction in the charges would no doubt become effective when the new service was placed in operation. At present an extra levy of 25 cents is made for relaying messages from Vernon to points south.

"In pursuance of its policy of extension and improvement the C. P. R. telegraph department is rebuilding the telegraph line between Sicamous and Okanagan Landing.

"The C. P. R. will install a complete east and west telegraph system along the Kettle Valley line, making junctions with other points of its system at Hope and Midway. This will give the company a third alternative line through the interior of British Columbia. At present, messages from the East and West, and vice versa, may be transmitted around by the Crows Nest, Nelson, Revelstoke route as well as by the main line. The extension of the Okanagan telegraph service will give still another alternative route for a portion of the same territory."

"LET THEM STARVE"

If the militant suffragetts of the Mother Country were capable of comprehending what they were doing they would have discovered long ago that every unlawful act of their's was but drawing the hand of fate tighter about them, and putting the people of England more bitterly against them. But to see themselves as others see them is not within the scope of militancy. By degrees they have gone from one evil to another, until at last the English people have turned upon them. Their desperate acts of the past few weeks have turned public feeling against them until the cry is heard from all quarters that they should be allowed to starve to death in prison if they insist on following the hunger strike that far.

"There would be nothing ethically wrong in letting them die," said Father Bernard Vaughn. "Let them start at once and make up for lost time."

Rev. Arthur Waldron, vicar of St. Matthews, Brixton, said: "If the women refuse food they should be allowed to die."

SNOW AT CLINTON

A letter from Clinton under date of June 3rd, says a heavy snow fell there the night before, and to look around one would think they were in the dead of winter. "The grading will be done to Clinton in a month or two, and when the railway reaches here, Clinton will be a thing of the past. Two men own the whole valley, and they hold the land at such a high price that people will not buy. About four families leave Clinton for other points daily. Most of them set out for the Fish Lake valley, though it is now certain that Williams Lake is going to be the most important point on the line. It is the head of navigation for a very large district and will be the divisional point for the railway. The railway company has purchased a large ranch property there, for which the company paid $80,000. There are in the neighborhood of 1000 men employed on construction work in the vicinity of Clinton."

EMPRESS OF IRELAND'S DEAD

The final complete official figures furnished by the C. P. R. of the Empress of Ireland disaster shows a total of 455 saved, making 1024 lost, as the total number on board was 1479 passengers and crew. The following is a summary:

The rescued—First cabin, 36; second-class, 47; third-class, 136; officers and crew, 233.

The missing—First-class, 56; second-class, 209; third-class, 582; officers and crew, 180.

Identified dead—First-class, 22; second-class, 31; third-class 30; officers and crew, 12.

When the Empress sailed from Quebec she had on board 1476 souls, as follows: First-class, 92; second-class, 256; third-class, 718; officrs and crew, 413. Total, 1479.

Gross receipts from the "Fair of Nations" given with such signal success recently by the Women's Hospital Aid Society, assisted by the Girls' Hospital Auxiliary, total more than $1,600, with accounts from four of the booths still to come in. It is now estimated that the net profits of the Fair will somewhat exceed $1,300.—Vernon News.

Enderby Supply Co.

A Thousand Dollars' worth of Foot-Comfort for $2.50

All who have purchased a pair of Foot-Easers (see illustrated in our shoe window) declare that we have the solution of all foot-troubles. We carry a full line Dr. Scholl's Foot-easers, for ladies and gentlemen. These are the scientific foot comforts. If you are troubled with sore, tired feet, here is the remedy.

In Our Grocery Department

We are supplying the best known brands in Cured Meats—ham, bacon, etc.—and the best in Canned Goods, and all staple articles. We invite you to inspect our goods; if not as represented, don't buy.

Enderby Supply Company

Grocers Men's Wear Shoes

Wiping Away the Tears

The preacher was young and nervous, but interesting. He was making an eloquent plea for the home life, and was descanting eloquently on the evils of the club, telling his congregation that married men in particular should spend their evenings at home with their wives and children. "Think, my hearers," said he, "of a poor, neglected wife, all alone in the great dreary house, rocking the cradle of her sleeping babe with one foot and wiping away the tears with the other."

WANT ADS

ADVERTISEMENTS under this head 3c a word first insertion, 1c a word each subsequent insertion.

LOST—One small bay mare, branded on right shoulder. Last seen had halter on. Finder will be suitably rewarded. G. E. McMahon, Enderby.

FOR SALE—Milch cow; also one buggy and single harness. H. Gildemeester, Enderby.

FOUND—On the recreation ground May 25th, a pair of gold-rimmed eye glasses in case. Owner may have same on identifying property and paying for this advertisement. Walker Press office.

STRAYED—A bay mare, weight about 1000; heavy mane and forelock; branded on left shoulder. Address, J. L. Ruttan, Enderby.

FOR SALE—Ranch of 172 acres; 7 acres cleared; $35.00 per acre; frame house 16x24 and other buildings; black loam bottomland well timbered, some cedar. Will take as part payment town property. Apply, Jas. Ellison, Enderby

WHITE PEKIN DUCK EGGS for hatching; $1.00 for setting of 11. MRS. JNO. McKAY, Waterside, Enderby. m12-8t

FOR SALE—Pressed brick, common brick, cement and lime. W. A. Russell, Enderby.

DWELLING HOUSE For Rent; eight rooms and kitchen; Barnes' addition; good garden on four lots; rent $20 per month. Apply, James Mowat, agent.

MRS. PARADIS, Dress Making Parlor, Cliff street, second building from furniture store. Fashionable dressmaking and ladies' tailoring. Reasonable prices. Work promptly executed.

Just received—a complete line of the celebrated "K" make of English shoes—once worn always asked for

Peace in a small burg: An uninteresting interval between bridges

The Enderby Supply Co' Linen, Straw and Panama Hats are the best they have ever shown.

"YOU WILL LIKE OUR GOODS"

MURRIN HARDWARE CO., LTD.

THIS WEEK SPECIAL Sherwin-Williams Paints $2.45

Regular at $3 per Gallon; this week Special at.....

WE ARE

Exclusive agents for
McCLARY'S FAMOUS STOVES AND RANGES
There is none better, and the prices are right

Exclusive agents for
THE CANADA CYCLE COMPANY
Manufacturers of Cleveland and Standard Bicycles—you can't beat them

If you are contemplating the installation of a furnace, we are sole agents for McCLARY'S SUNSHINE. You know it is the BEST.
We are specialists in installing all kinds of Plumbing work and Tinsmithing

Successors to Fulton Hardware Co. **MURRIN HARDWARE CO., Ltd.** ENDERBY