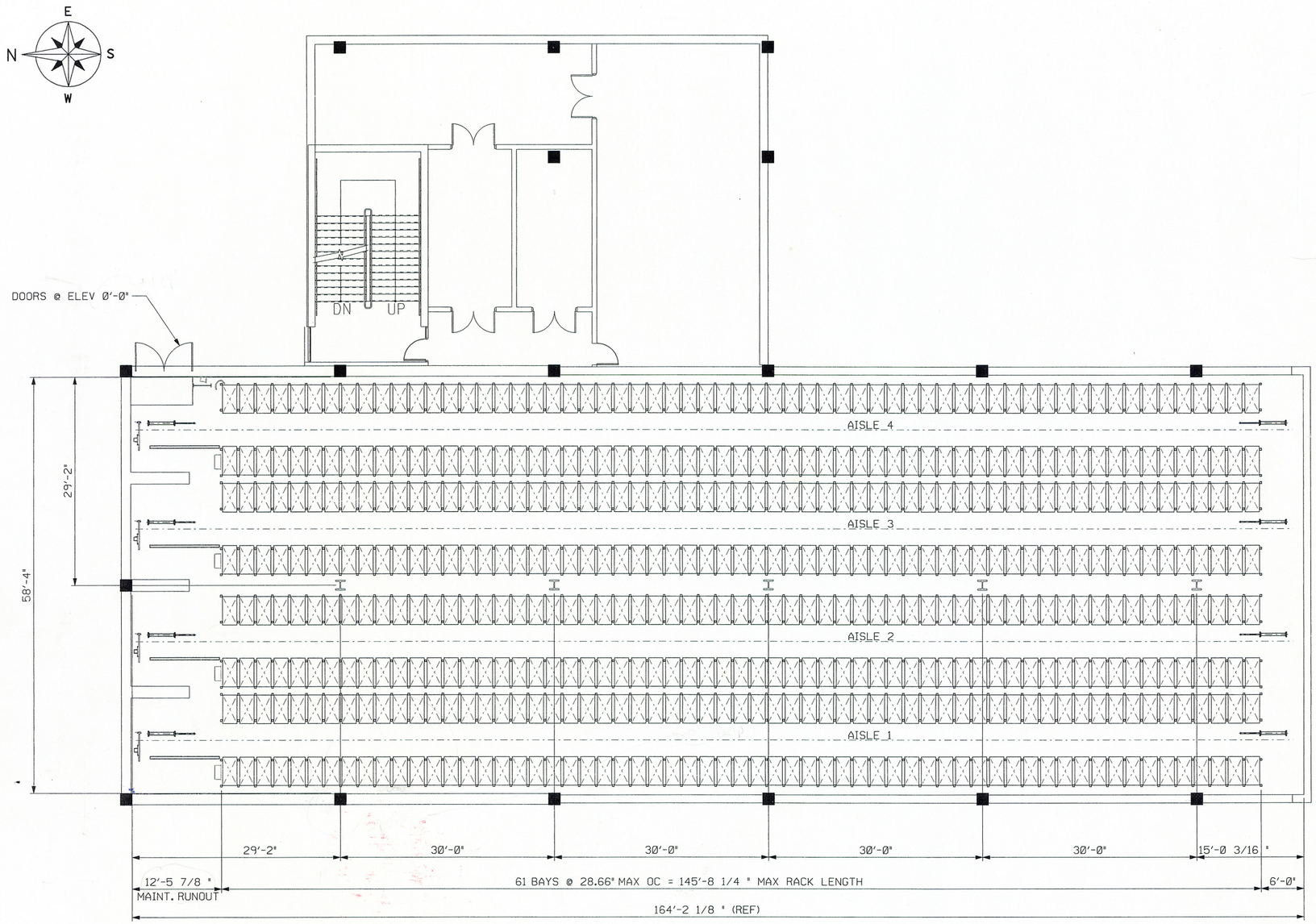

PLAN VIEW AT AS/RS FLOOR

ELEV = -20'-0"

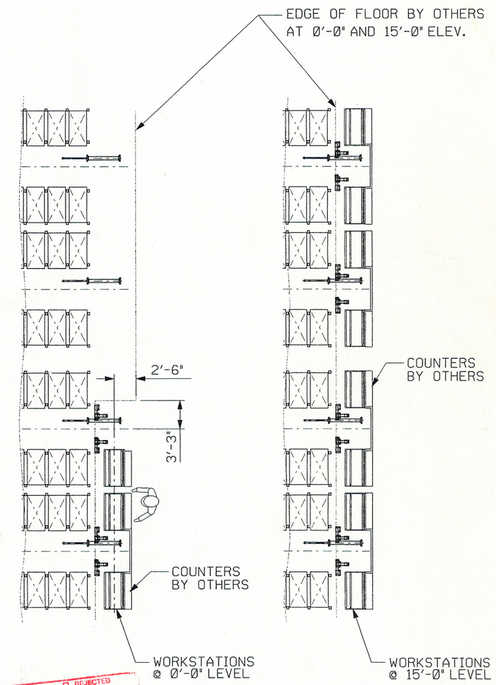

REVIEWED
REVISE AND RESUBMIT
NOT REVIEWED
REJECTED
REVIEWED AS MODIFIED

Corrections or comments made on the shop drawings during this review do not relieve contractor from compliance with requirements of the drawings and specifications. This check is only for review of the general conformance with the design concept of the project and general compliance with the information given in the contract documents. The contractor is responsible for: Confirming and correlating all quantities and dimensions; selecting fabrication processes and techniques of construction; coordinating their work with that of all other trades and performing all work in a safe and satisfactory manner.

DOWNS/ARCHAMBAULT & PARTNERS
Date 19 JAN 2004 File 11000
By

REVIEWED FOR GENERAL CONFORMITY
RESUBMIT WITH ALL SHOP DRAWINGS
B.C. P.ENGT. SEALED FOR REVIEW.

RECEIVED
DEC 22 2003
LEDCOR

ACTIVE
17-DEC-2003 09:06

ECO NUMBER	REV	REVISION	DATE	CHANGED BY	APPROVED BY
	4	REVISED	12-17-03	SLK	SRP
	3	REVISED RACK SPACING FROM 28.75" TO 28.66"	12-11-03	SLK	SRP
	2	ADDED BUTTRESS AT NORTH END	10-13-03	SLK	SRP
	1	REVISED WORKSTATIONS AND 0'-0" FLOOR	8-7-03	SLK	SRP

SURFACE MARKED THUS √ MUST BE WITHIN A ROUGHNESS VALUE OF 250 MICROINCHES UNLESS OTHERWISE SPECIFIED

GENERAL TOLERANCE NOTES

DECIMAL PLACE	STRUCTURAL	MACHINING
(1) X.X	±.240	±.040
(2) X.XX	±.120	±.020
(3) X.XXX	±.060	±.010
(4) X.XXXX	±.030	±.005

DASH NUMBER | NEXT ASS'Y NUMBER

PAINT NOTE:
MATERIAL:
BOM NUMBER:
SUPERSEDES:

CAD/CAM DRAWING – DO NOT MANUALLY CHANGE
THIRD ANGLE PROJECTION

HK SYSTEMS® SUPPLY CHAIN SOLUTIONS

NOTICE: "THIS DRAWING AND THE DATA SHOWN THEREON ARE PROPRIETARY AND CONFIDENTIAL AND ARE NOT TO BE USED NOR REPRODUCED FOR ANY PURPOSE WITHOUT THE EXPRESSED WRITTEN CONSENT OF HK SYSTEMS INC."

DWN BY SLK DATE 7-17-03
CHKD BY SRP DATE 7-17-03
SCALE 1/8"=1'-0"
APPD BY SRP DATE 7-17-03

DRAWING TITLE: AS/RS GROUND FLOOR
PRODUCT OR MODEL: RACK
WEIGHT:
PROJECT NAME: UBC BRITISH COLUMBIA
PROJECT NO: I00034
CODE: MR
HKS DRAWING NO: 19852H
SHT 1 OF 1
REV 4
D-SIZE
MICROSTATION

TOTAL PANS FOR AISLES 1 & 2

6" PANS, 1-LEVEL = 244
10" PANS, 11-LEVELS = 2684
12" PANS, 25-LEVELS = 6100
16" PANS, 2-LEVELS = 488

TOTAL PANS FOR AISLES 3 & 4

10" PANS, 14-LEVELS = 3416
12" PANS, 23-LEVELS = 5612
16" PANS, 2-LEVELS = 488

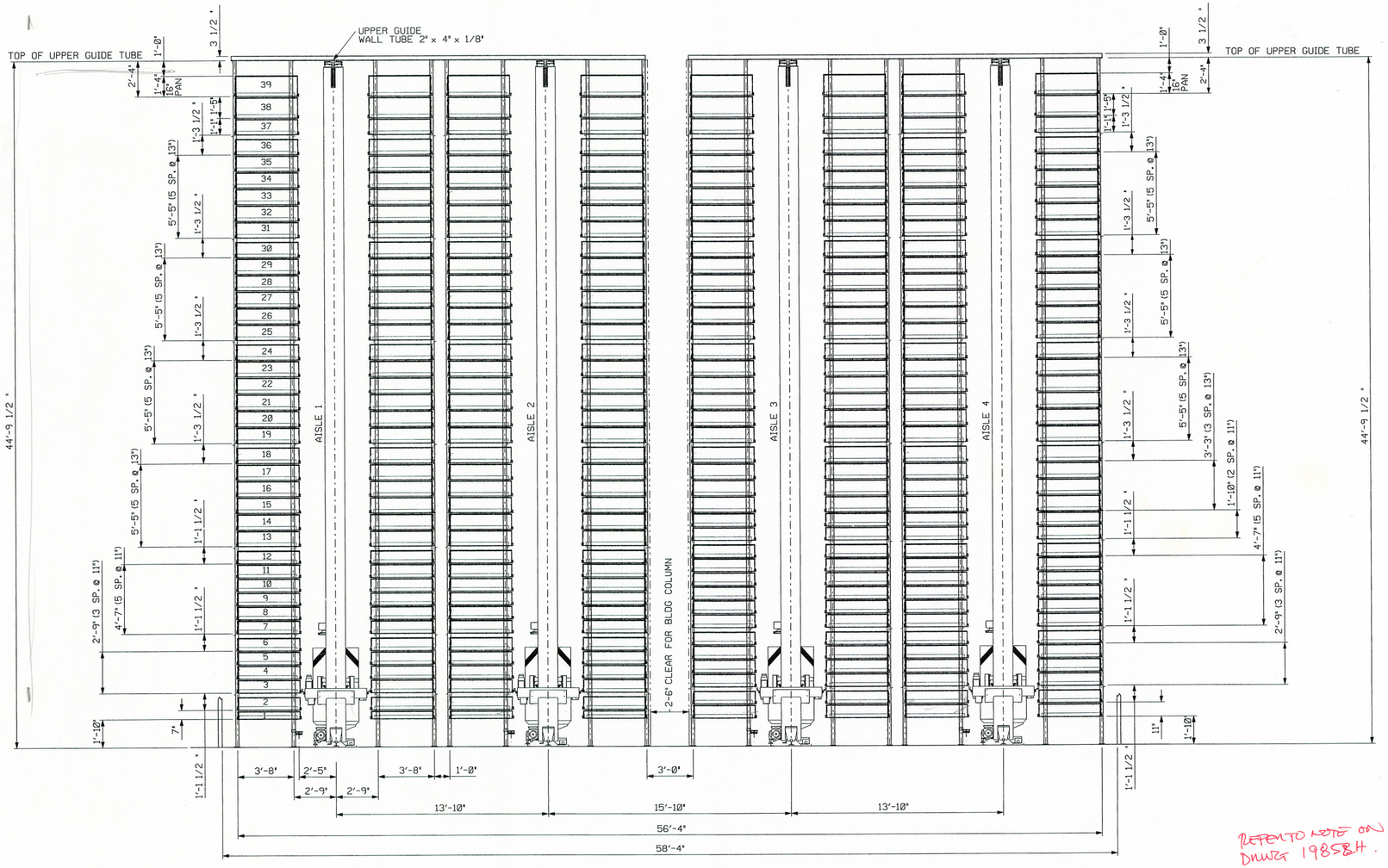

REFER TO NOTE ON DWG 19858H.

REVIEWED
REVISE AND RESUBMIT
NOT REVIEWED
REJECTED
REVIEWED AS MODIFIED

Corrections or comments made on the shop drawings during this review do not relieve contractor from compliance with requirements of the drawings and specifications. This check is only for review of the general conformance with the design concept of the project and general compliance with the information given in the contract documents. The contractor is responsible for: Confirming and correlating all quantities and dimensions; selecting fabrication processes and techniques of construction, coordinating their work with that of all other trades and performing all work in a safe and satisfactory manner.

DOWNS/ARCHAMBAULT & PARTNERS
Date 17 JAN 04 File 11000
By

5612
6100
11712
488
488
474

ACTIVE

16-DEC-2003 10:01

ECO NUMBER	REV	REVISION	DATE	CHANGED BY	APPROVED BY

SURFACE MARKED THUS √ MUST BE WITHIN A ROUGHNESS VALUE OF 250 MICROINCHES UNLESS OTHERWISE SPECIFIED

GENERAL TOLERANCE NOTES

DECIMAL PLACE	STRUCTURAL	MACHINING
(1) X.X	±.240	±.040
(2) X.XX	±.120	±.020
(3) X.XXX	±.060	±.010
(4) X.XXXX	±.030	±.005

DASH NUMBER | NEXT ASS'Y NUMBER

PAINT NOTE: | BOM NUMBER:
MATERIAL: | SUPERSEDES:

CAD/CAM DRAWING – DO NOT MANUALLY CHANGE
THIRD ANGLE PROJECTION

HK SYSTEMS® SUPPLY CHAIN SOLUTIONS

NOTICE: "THIS DRAWING AND THE DATA SHOWN THEREON ARE PROPRIETARY AND CONFIDENTIAL AND ARE NOT TO BE USED NOR REPRODUCED FOR ANY PURPOSE WITHOUT THE EXPRESSED WRITTEN CONSENT OF HK SYSTEMS INC."

DWN BY SLK DATE 7-17-03
CHKD BY SRP DATE 7-17-03
SCALE 1/4"=1'-0"
APPD BY SRP DATE 7-17-03

DRAWING TITLE: RACK CROSS AISLE ELEVATION
PRODUCT OR MODEL: RACK
WEIGHT:
PROJECT NAME: UBC BRITISH COLUMBIA
PROJECT NO: I00034
CODE: MR
HKS DRAWING NO: 19853H
SHT 1 OF 1
REV
D-SIZE
MICROSTATION

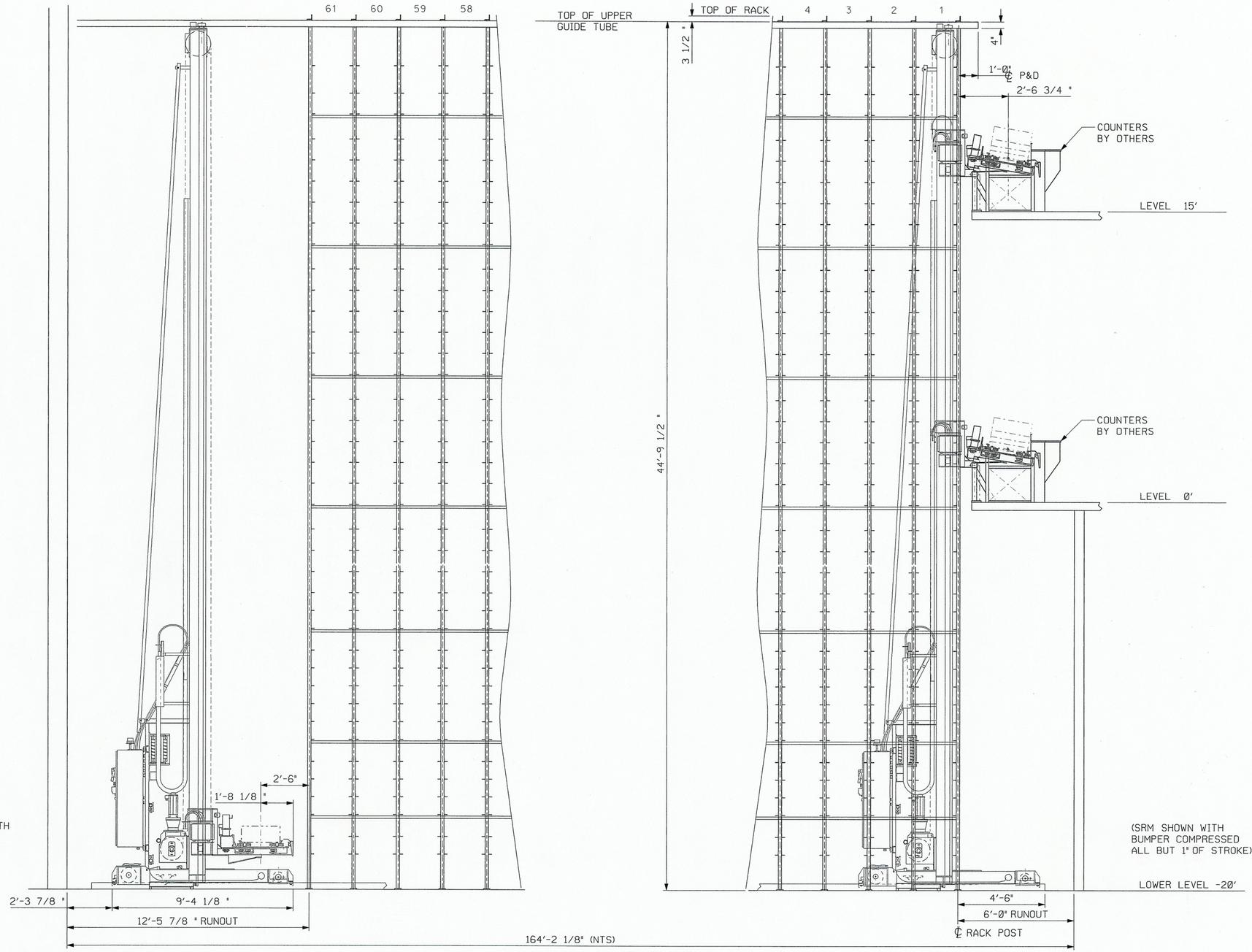

RACK DOWN AISLE ELEVATION

REFER TO NOTE ON DWG 19853H

REVIEWED
REVISE AND RESUBMIT
NOT REVIEWED
REJECTED
REVIEWED AS MODIFIED

Corrections or comments made on the shop drawings during this review do not relieve contractor from compliance with requirements of the drawings and specifications. This check is only for review of the general conformance with the design concept of the project and general compliance with the information given in the contract documents. The contractor is responsible for: Confirming and correlating all quantities and dimensions; selecting fabrication processes and techniques of construction; coordinating their work with that of all other trades and performing all work in a safe and satisfactory manner.

DOWN/ARCHAMBAULT & PARTNERS
Date 19 JAN 2004 File 11000
By

ACTIVE
17-DEC-2003 09:07

ECO NUMBER	REV	REVISION	DATE	CHANGED BY	APPROVED BY
	3	REVISED	12-17-03	SLK	SRP
	2	INCREASED CRANE FROM 9'-1 3/8" TO 9'-4 1/8"	12-11-03	SLK	SRP
	1	ADDED NOTES	8-7-03	SLK	SRP

SURFACE MARKED THUS ✓ MUST BE WITHIN A ROUGHNESS VALUE OF 250 MICROINCHES UNLESS OTHERWISE SPECIFIED

GENERAL TOLERANCE NOTES

DECIMAL PLACE	STRUCTURAL	MACHINING
(1) X.X	±.240	±.040
(2) X.XX	±.120	±.020
(3) X.XXX	±.060	±.010
(4) X.XXXX	±.030	±.005

DASH NUMBER | NEXT ASS'Y NUMBER

PAINT NOTE: | BOM NUMBER:

MATERIAL: | SUPERSEDES:

CAD/CAM DRAWING – DO NOT MANUALLY CHANGE

THIRD ANGLE PROJECTION

HK SYSTEMS® SUPPLY CHAIN SOLUTIONS

NOTICE: "THIS DRAWING AND THE DATA SHOWN THEREON ARE PROPRIETARY AND CONFIDENTIAL AND ARE NOT TO BE USED NOR REPRODUCED FOR ANY PURPOSE WITHOUT THE EXPRESSED WRITTEN CONSENT OF HK SYSTEMS INC."

DWN BY SLK DATE 7-17-03
CHKD BY SRP DATE 7-17-03
SCALE 3/8"=1'-0"
APPD BY SRP DATE 7-17-03

DRAWING TITLE: END OF AISLE INTERFACE (DOWN AISLE)
PRODUCT OR MODEL: RACK
WEIGHT:

PROJECT NAME: UBC BRITISH COLUMBIA
PROJECT NO: I00034
CODE: MR
HKS DRAWING NO: 19854H
SHT 1 OF 1
REV 3

D-SIZE
MICROSTATION

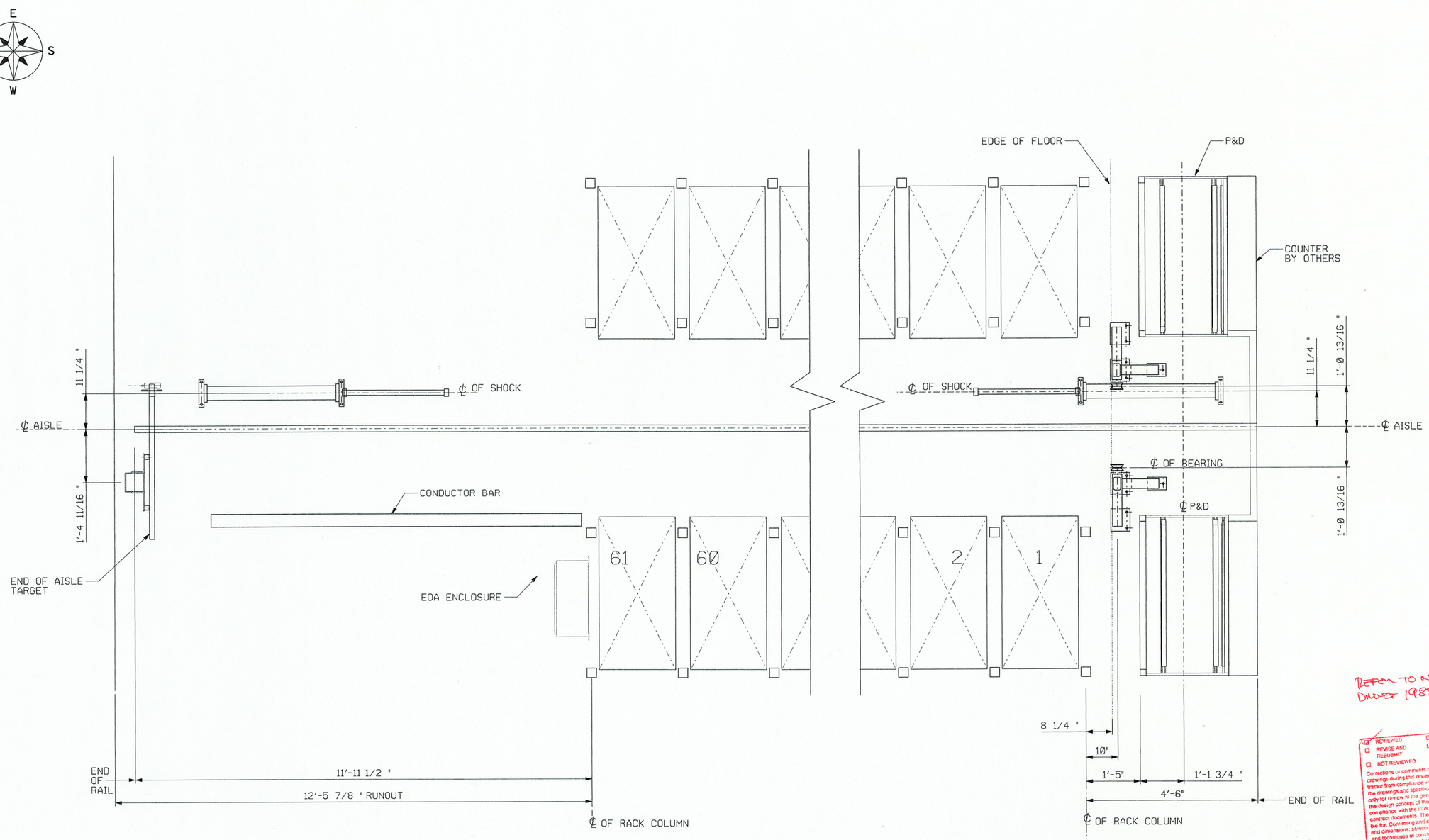

REFER TO NOTE ON DWG# 19855H

REVIEWED
REVISE AND RESUBMIT
NOT REVIEWED
REJECTED
REVIEWED AS MODIFIED

Corrections or comments made on the shop drawings during this review do not relieve contractor from compliance with requirements of the drawings and specifications. This check is only for review of the general conformance with the design concept of the project and general compliance with the information given in the contract documents. The contractor is responsible for: Confirming and correlating all quantities and dimensions; selecting fabrication processes and techniques of construction; coordinating their work with that of all other trades and performing all work in a safe and satisfactory manner.

DOWNS/ARCHAMBAULT & PARTNERS
Date 9 JAN 2004 Job 11000
By

ACTIVE

17-DEC-2003 09:08

ECO NUMBER	REV	REVISION	DATE	CHANGED BY	APPROVED BY
	2	REVISED	12-17-03	SLK	SRP
	1	REVISED RUNOUTS	12-11-03	SLK	SRP

DASH NUMBER	NEXT ASS'Y NUMBER

PAINT NOTE:

BOM NUMBER:

MATERIAL:

SUPERSEDES:

CAD/CAM DRAWING – DO NOT MANUALLY CHANGE

THIRD ANGLE PROJECTION

HK SYSTEMS® SUPPLY CHAIN SOLUTIONS

NOTICE: "THIS DRAWING AND THE DATA SHOWN THEREON ARE PROPRIETARY AND CONFIDENTIAL AND ARE NOT TO BE USED NOR REPRODUCED FOR ANY PURPOSE WITHOUT THE EXPRESSED WRITTEN CONSENT OF HK SYSTEMS INC."

DWN BY	SLK	CHKD BY	SRP
DATE	7-24-03	DATE	7-24-03
SCALE	3/4"=1'-0"	APPD BY	SRP
		DATE	7-24-03

DRAWING TITLE: END OF AISLE INTERFACE (PLAN VIEW)

PRODUCT OR MODEL: ASRS (HK 750)

WEIGHT:

PROJECT NAME: UBC BRITISH COLUMBIA

PROJECT NO: I00034

CODE: ML

HKS DRAWING NO: 19855H

SHT 1 OF 1

REV 2

D-SIZE

MICROSTATION

LIST OF MATERIALS

QTY/DASH NO. -004	-003	-002	-001	ITEM NO.	HK SYSTEMS PART NUMBER	MAT'L OR SPEC. MFR. PART NUMBER OR	MFG. CODE	NOMENCLATURE OR DESCRIPTION
			1	1		ASTM A527 A60		"B" (APPROX.) X "C" (APPROX.)
			2	2		ASTM A527 A60		24 (APPROX.) X "D" (APPROX.)
			4	3		ASTM A525 A60		SHT 10 GA, 6 1/2" X 5 1/2"

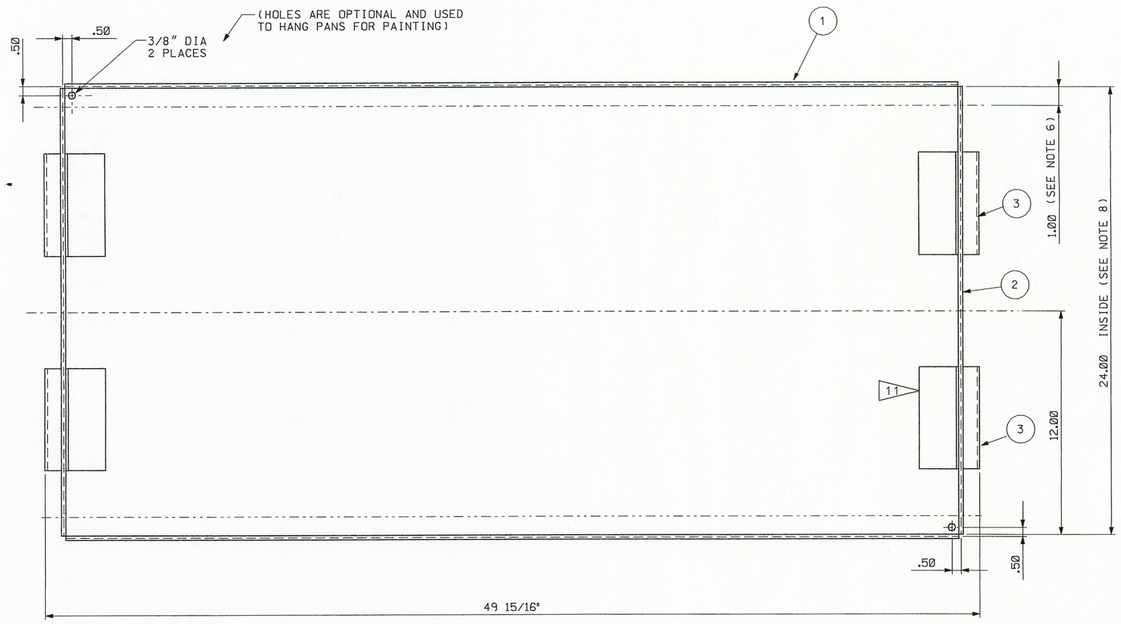

TOP VIEW

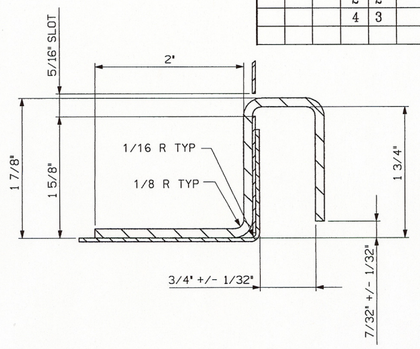

SECTION "A-A"

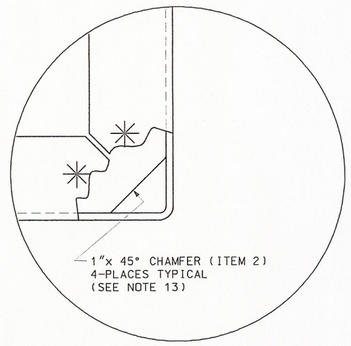

DETAIL "B"

NOTES:

1. MAX. LOAD WEIGHT: 750 LBS. INCLUDING PAN WEIGHT & DIVIDERS. MINIMUM MATERIAL THICKNESS FOR ITEM 1 TO BE 16 GA. MINIMUN MATERIAL THICKNESS FOR ITEM 2 TO BE 18 GA. PROVIDED THE MATERIAL DEFLECTION REQUIEREMENTS ARE MET. SEE NOTE 7.
2. SURFACE COATING TO BE NON-SPANGLED GALVANIZED, GALVANNEAL, OR DIFFERENTIAL COAT WITH UNIFORM SURFACE REFLECTIVITY OF +/-10% ALL PANS MUST BE OF THE SAME MATERIAL.
3. ALL PANS ARE TO BE CLEANED OF DIRT, GREASE, RUST, AND OTHER CONTAMINATES PRIOR TO ACCEPANCE AT THE JOB SITE
4. HOLD ALL SPOT WELDS MINIMUM 1/8" AND MAXIMUM 1/2" FROM ALL SEAM METAL EDGES. IF A WELD IS MISPLACED IT IS ACCEPTABLE TO REWELD IN THE CORRECT POSITION. HOLD ALL PARTS SQUARE AND TIGHT WHEN WELDING. ITEM 3 MUST BE TIGHT AGAINST SURFACES AND SQUARE WITH ENDS.
5. CONCAVE SPOT WELDS ARE ACCEPTABLE, CONVEX SURFACE AROUND SPOT WELDS ARE NOT TO EXCEED .020" ALL 4 CORNERS.
6. THE BOTTOM SURFACE OF ANY TOTE PAN SHALL BE RIDID ENOUGH THAT MAXIMUN DEFLECTION CAUSED BY A UNIFORMLY DISTRIBUTED LOAD OF LOOSE MATERIAL SHALL NOT EXCEED 1/2" .FOR TASR, PAN MUST BE ON 1" WIDE SUPPORTS ON BOTH SIDES FOR THE ENTIRE LENGTH ON THE PAN.
7. THE BOTTOM OF THE PAN CANNOT HAVE ANY RIBS. THE BOTTOM OF THE EMPTY PANS SHALL NOT WARP OR TWIST MORE THAN 1/4" MEASURED FROM A FLAT SURFACE TO THE 4TH RAISED CORNER WITH THREE CORNERS TOUCHING.
8. INSIDE DIMENSIONS (48" & 24") TO BE TAKEN AT THE BOTTOM OF THE TOTE PAN JUST ABOVE THE BEND RADIUS. 48" DIMENSION TO BE +/- 1/16" AT THE BOTTOM OF THE PAN AND NOT EXCEED -1/16" AND + 1/8" AT THE TOP OF THE PAN. 24" DIMENSION TO BE +/- 1/16" AT THE BOTTOM OF THE PAN AND +/- 1/16" AT THE TOP OF THE PAN ON BOTH ENDS. IN THE MIDDLE OF THE PAN, DIMENSIOPNS TO BE - 0", + 3/16" WITH STRAIGHTNESS OF EACH SIDE NOT TO EXCEED 3/16" AT THE TOP EDGE.
9. ALL COMMON DIAGONALS TO BE WITHIN 1/8".
10. HANDLE: 10 GA. GALVANIZED A525.
11. PAN HANDLE MUST WITHSTAND 650 LBS. PULL FORCE WITHOUT HANDLE, PAN BOTTOM, OR END PANEL DEFORMATION.
12. PANS AND HANDLES TO HAVE NO SHARP CORNERS OR EDGES.
13. WEEP HOLE PER CORNER TO .078 IN.SQ. FOR A SPRINKLER FLOW RATE OF 0.25 GPM/FT. SQ.

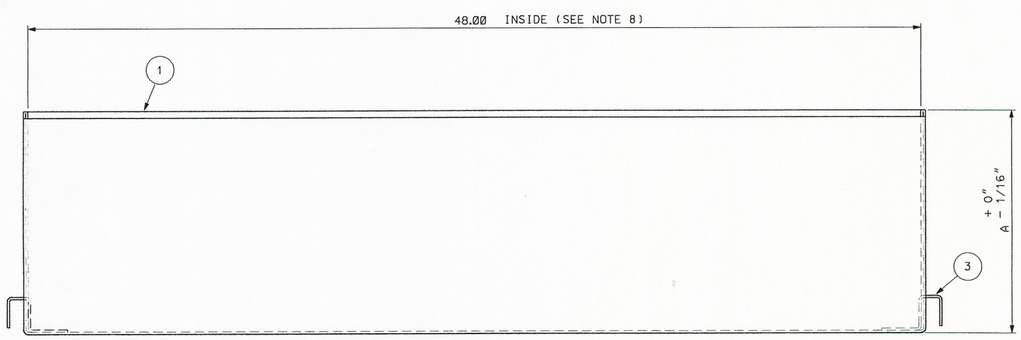

SIDE VIEW

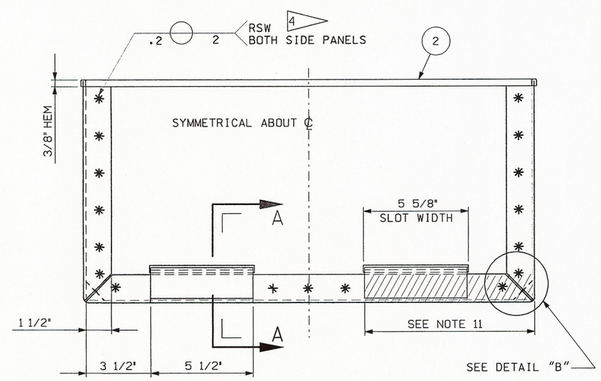

END VIEW

REFER TO NOTE ON DWG# 19853H

DASH NUMBER	HEIGHT"A"	QUANITY
-1	6"	244
-2	10"	6,100
-3	12"	11,712
-4	16"	976

☑ REVIEWED ☐ REJECTED
☐ REVISE AND RESUBMIT ☐ REVIEWED AS MODIFIED
☐ NOT REVIEWED

Corrections or comments made on the shop drawings during this review do not relieve contractor from compliance with requirements of the drawings and specifications. This check is only for review of the general conformance with the design concept of the project and general compliance with the information given in the contract documents. The contractor is responsible for: Confirming and correlating all quantities and dimensions; selecting fabrication processes and techniques of construction; coordinating their work with that of all other trades and performing all work in a safe and satisfactory manner.

DOWNS/ARCH/DAULT & PARTNERS
Date 9 JAN 2004 File 11000
By

ECO NUMBER	REV	REVISION	DATE	CHANGED BY	APPROVED BY

TOLERANCES UNLESS OTHERWISE NOTED:

MILLIMETERS	INCHES	ANGULAR
XX = ± 1	FRAC. = ± 1/16	XX° = ± 1/2°
.X = ± .5	.XX = ± .03	TORQUE
.XX = ± .25	.XXX = ± .010	± 5%

DRILL HOLES PER HK SPEC. A0079602-001
REMOVE ALL BURRS AND SHARP EDGES
MACHINED FINISH 125

DASH NUMBER	NEXT ASS'Y NUMBER

PAINT NOTE: | BOM NUMBER:
MATERIAL: | SUPERSEDES:

CAD/CAM DRAWING – DO NOT MANUALLY CHANGE
THIRD ANGLE PROJECTION

HK SYSTEMS® SUPPLY CHAIN SOLUTIONS

NOTICE: "THIS DRAWING AND THE DATA SHOWN THEREON ARE PROPRIETARY AND CONFIDENTIAL AND ARE NOT TO BE USED NOR REPRODUCED FOR ANY PURPOSE WITHOUT THE EXPRESSED WRITTEN CONSENT OF HK SYSTEMS INC."

DWN BY SLK DATE 7-23-03	CHKD BY SRP DATE 7-23-03	DRAWING TITLE: MINILOAD PAN	
SCALE 1/4" = 1"	APPD BY SRP DATE 7-23-03	PRODUCT OR MODEL: HK750	WEIGHT:
PROJECT NAME: UBC BRITISH COLUMBIA	PROJECT NO: I00034	CODE: MR	HKS DRAWING NO: 19856H
SHT 1 OF 1	REV	D-SIZE	

ACTIVE

16-DEC-2003 10:03

JOHNSON

MICROSTATION