W-310-S9 11-29
(Superseding W-310-S6 and W-310-S7)

SPECIFICATION

WORTHINGTON

MULTI-STAGE
VOLUTE PUMPS

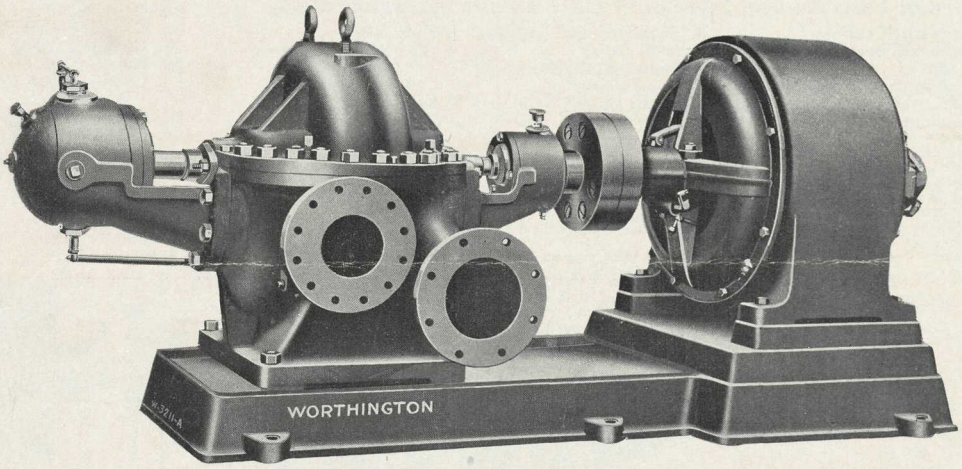

Worthington No. 6 UB-1 Two-Stage Centrifugal Pump Direct Connected to Electric Motor

TYPE "UB-1"
TWO-STAGE

B. C. DISTRIBUTORS
PUMPS & POWER LTD
40 CORDOVA EAST (OPP. McL-McF)
PHONE SEY. 1874 VANCOUVER, B. C.

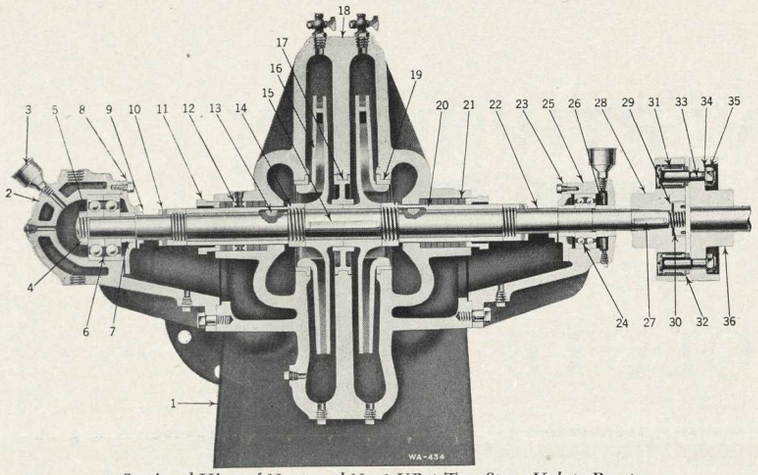

Sectional View of No. 2 and No. 3 UB-1 Two-Stage Volute Pump

List of Parts for No. 2 to No. 3 UB-1 Two-Stage Volute Pump

1. Lower half casing
2. Outboard bearing housing
3. Grease cup
4. Outboard locknut
5. Outboard lock washer
6. Outboard ball bearing
7. Shaft collar
8. Outboard bearing housing cover
9. Water shield
10. Shaft nut
11. Gland
12. Water seal cage
13. Woodruff key
14. Impeller nut
15. Impeller key
16. Impeller
17. Stage piece
18. Upper half casing
19. Impeller guide ring
20. Shaft sleeve
21. Packing
22. Shaft
23. Inboard bearing housing cover
24. Inboard ball bearing
25. Inboard bearing housing
26. Inboard bearing bushing
27. Coupling key
28. Pump half coupling
29. Coupling lock washer
30. Coupling lock nut
31. Coupling buffer
32. Coupling collar
33. Coupling bolt
34. Coupling bolt lock washer
35. Coupling bolt nut
36. Driver half coupling

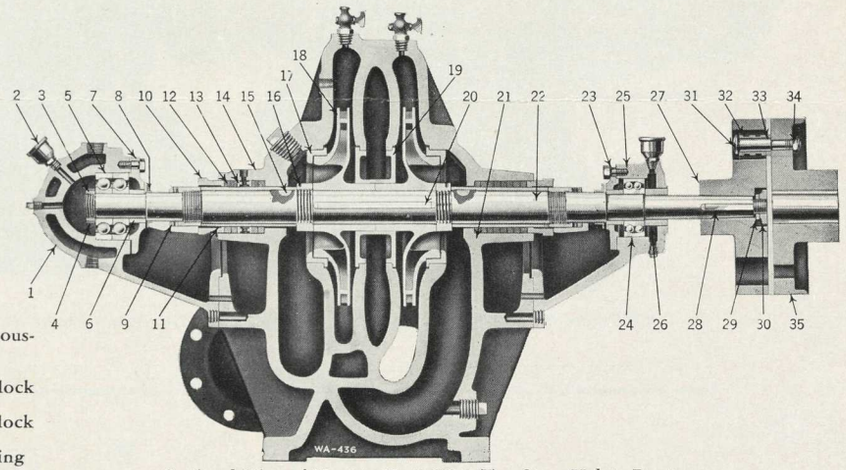

Sectional View of No. 4 to No. 8 UB-1 Two-Stage Volute Pump

List of Parts for No. 4 to No. 8 UB-1 Two-Stage Volute Pump

1. Outboard bearing housing
2. Grease cup
3. Outboard bearing lock nut
4. Outboard bearing lock washer
5. Outboard ball bearing
6. Shaft collar
7. Outboard bearing housing cover
8. Water shield
9. Shaft nut
10. Gland
11. Shaft sleeve
12. Packing
13. Water seal cage
14. Upper half casing
15. Woodruff key
16. Impeller nut
17. Impeller guide ring
18. Impeller
19. Stage piece
20. Impeller key
21. Lower half casing
22. Shaft
23. Inboard bearing housing cover
24. Inboard ball bearing
25. Inboard bearing housing
26. Inboard bearing bushing
27. Pump half coupling
28. Coupling key
29. Coupling nut lock washer
30. Coupling lock washer
31. Coupling bolt
32. Coupling buffer
33. Coupling collar
34. Coupling bolt nut
35. Driver half coupling

SPECIFICATION

CASING. The casing is of the volute type and is designed to produce smooth flow with gradual changes in velocity. The interstage passage is cast integral with the lower half of the casing and is carefully formed to eliminate losses. The casing is split on the horizontal centerline with the suction and discharge nozzles in the lower half. Access to the interior of the pump for the purpose of inspection and repairs is obtained by removing the upper half of the casing. This may be done without disturbing the pipe connection or pump alignment. The joint between the casing halves is sealed by an especially prepared gasket.

IMPELLERS. Two single suction enclosed type impellers are placed opposed on the shaft. This results in a hydraulically balanced pump. The impellers are firmly secured to the shaft with keys. One renewable bronze bushing ring is used on each impeller and maintains a close running fit preventing excessive leakage. Interstage leakage is prevented by a stage piece which is so designed as to give a long close clearance with the impeller hubs.

SHAFT. The shaft is made of heat-treated steel. It is ground to accurate dimensions and is polished to a smooth surface. Cast bronze shaft sleeves protect the shaft in the stuffing boxes. The sleeves are secured by external nuts and the impeller key is extended into the hub of the sleeves.

BEARINGS. The shaft is supported by two ball bearings, one located on each side of the pump. The outboard bearing is of the deep groove thrust type and is water jacketed.

STUFFING BOXES. The stuffing boxes are of extra depth to prevent leakage. The glands are made of bronze and are secured with special swing bolts. A water seal gland is placed in the low pressure box and is connected to the pump discharge to provide liquid under discharge pressure to prevent air leakage.

BEDPLATE. The standard bedplate is of rigid construction and is provided with a raised lip. The top of the bedplate is sloped to drain off any leakage from the pump. The bedplate is provided with lugs for foundation bolts.

COUPLING. A flexible coupling of the rubber bushing and pin type is supplied with each direct-connected unit.

EQUIPMENT. Each pump is equipped with the necessary special wrenches, water seal piping, air and water cocks and grease cups.

A bulletin giving complete instructions for installing and operating is supplied with each pump.

DIMENSIONS OF TYPE "UB-1" TWO-STAGE VOLUTE PUMPS

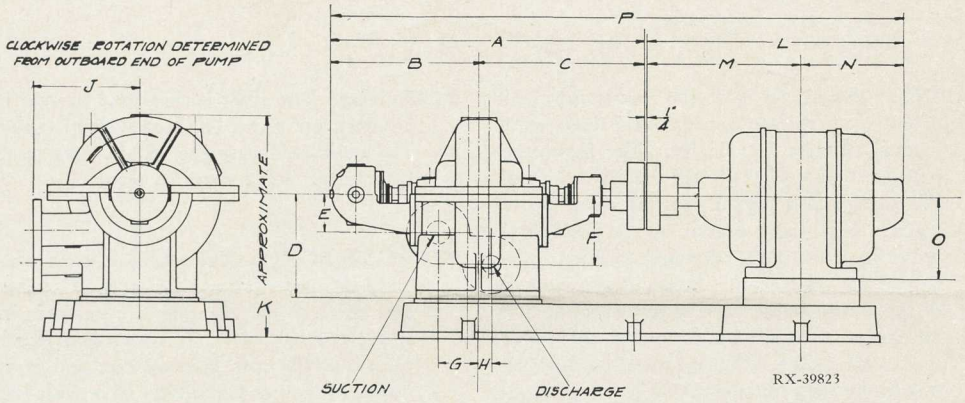

Outside end view of pump *Front view*

Size No. of Pump	Size and Drilling of Discharge Nozzle 250 Pounds					Size and Drilling of Suction Nozzle 125 Pounds					A	B	C	D	E	F	G	H	J	K	* L	* M	* N	* O	* P
	Diameter of Opening	Diameter of Flange	Number of Bolts	Size of Bolts	Diameter of Bolt Circle	Diameter of Opening	Diameter of Flange	Number of Bolts	Size of Bolts	Diameter of Bolt Circle															
2	2	6½	8	⅝	5	2½	7	4	⅝	5½	36	17	19	12	4¼	8	4⅝	1 7/16	12	27	32 3/16	19⅝	12 15/16	9½	68 13/16
3	3	8¼	8	¾	6⅝	4	9	8	⅝	7½	36	17	19	14	4⅞	9 9/16	5⅝	2	14	30	42 3/16	25 9/16	16⅝	12¾	78 7/16
4	4	10	8	¾	7⅞	5	10	8	¾	8½	48	22 11/16	25 5/16	16	10	10	7 5/16	2 13/16	14	33¼	44¼	25 7/16	18 13/16	14¾	92½
5	5	11	8	¾	9¼	6	11	8	¾	9½	52½	24⅜	28⅛	19¼	6⅝	11½	9¼	2	17	38¾	47¼	26 15/16	20 5/16	14¾	100
6	6	12½	12	¾	10⅝	8	13½	8	¾	11¾	51¼	25¼	29	20½	6 7/16	11½	9¾	3½	17	40⅛	48⅞	28	20⅞	16	103⅜
8	8	15	12	⅞	13	10	16	12	⅞	14¼	56 9/16	26 9/16	30	24	7¾	14	11⅝	3⅝	21	48½	51⅞	29½	22⅜	16	108 11/16

All dimensions are in inches

*NOTE—Dimensions L-M-N-O-P are approximate only and depend on size and type of motor

DIMENSIONS NOT TO BE USED FOR CONSTRUCTION PURPOSES

WORTHINGTON PUMP AND MACHINERY CORPORATION

Works: Harrison, N. J. Cincinnati, Ohio Buffalo, N. Y. Holyoke, Mass.

Executive Offices: 2 Park Avenue, New York, N. Y.

GENERAL OFFICES: HARRISON, N. J.

District Sales Offices:

ATLANTA, BOSTON, BUFFALO, CHICAGO, CINCINNATI, CLEVELAND, DALLAS, DENVER, DETROIT, EL PASO, HOUSTON, KANSAS CITY, LOS ANGELES, NEW ORLEANS, NEW YORK, PHILADELPHIA, PITTSBURGH, ST. LOUIS, ST. PAUL, SALT LAKE CITY, SAN FRANCISCO, SEATTLE, TULSA, WASHINGTON

Branch Offices or Representatives in Principal Cities of all Foreign Countries

WORTHINGTON PRODUCTS

PUMPS, COMPRESSORS, CONDENSERS AND AUXILIARIES, DIESEL AND GAS ENGINES, FEEDWATER HEATERS, WATER, OIL AND GASOLINE METERS

Copyright, 1929

Printed in U.S.A.