H. Tyson,
Manager, Marine Operations

Canadian Pacific

MARINE DEPARTMENT, PIER "B", VANCOUVER, B.C.

November 16th, 1967.

13913.

Harry Watters, Esq.
Chief Engineer
Puget Sound Air Pollution Control Agency
900 Public Safety Building
Seattle, Washington 98104.

Dear Mr. Watters:

Reference your letter of October 26th regarding steps to be taken to correct combustion problem on the "Princess Marguerite".

On the recommendation of Burrard Drydock Limited, Shipbuilders, Ship Repairers and Industrial Engineers, we engaged Mr. W.L. Beattie, Representative on the B.C. Coast for the Eclipse Fuel Engineering Company of Canada, to undertake this study.

It is expected that we will commence the annual overhaul of the "Princess Marguerite" in January, 1968. I have recommended to management that we let the contract to Mr. W.L. Beattie in January 1968 and have the work completed by the end of April, 1968. This firm fully expects that it will have sufficient time to carry out the work, and I should be in a position, sometime in early January, to let you have a report from the engineering firm.

Yours very truly,

H. Tyson

Manager
Marine Operations.

c.c. H. J. Tumilty, Esq.

H. Tyson,
Marine Superintendent

Canadian Pacific

Marine Department, Pier 'B', VANCOUVER, B.C.

January 9th, 1968.

13913.

Harry Watters, Esq.
Chief Engineer
Puget Sound Air Pollution Control Agency
900 Public Safety Building
Seattle, Washington 98104.

Dear Mr. Watters:

Further to my letter of November 16th regarding measures to be taken to correct combustion problem on the "Princess Marguerite".

We have now awarded a contract to the Eclipse Fuel Engineering Co. of Canada Limited to carry out any necessary work on board the "Princess Marguerite" to eliminate excessive smoke emission and to improve the combustion efficiency.

You will now find attached a photostat copy of report from the H.L. Industrial Consultants Limited, dated December 11th, 1967, covering the survey they carried out on board the "Princess Marguerite" while the vessel was in actual service between Seattle and Victoria. You will be pleased to know that the Eclipse Fuel Engineering Co. of Canada Limited commenced work on the Boilers, Instruments, etc. yesterday, and that we expect to have the work completed in April this year.

You will also be pleased to know that Mr.A.B.K. Anderson, Chief Engineer, Eclipse Fuel Engineering Co. of Canada Limited, from Toronto, Ontario, personally inspected the Boilers and Stokehold of the "Princess Marguerite" and he is satisfied that with the steps being taken the smoke nuisance will be eliminated.

We appreciate the problems which existed on board the "Princess Marguerite" this summer, while it was alongside the dock in Seattle, and I just want to let you know that we do appreciate very much indeed your patience in bearing with us

. . . 2

H. Tyson,
Marine Superintendent

Canadian Pacific

Marine Department, Pier 'B', VANCOUVER, B.C.



January 9th, 1968.

Harry Watters, Esq.

13913.

last Summer.

I take this opportunity of extending to you and your staff my warmest wishes for a healthy and happy 1968.

Yours very truly,

Manager
Marine Operations.

attachments.

c.c. H. J. Tumilty, Esq.

# ECLIPSE FUEL ENGINEERING CO.

## OF CANADA LTD.

20 UPJOHN ROAD, DON MILLS, ONTARIO

SOLD TO
C.P.R. Marine Div.,
TSS Princess Marguerite
Victoria, B.C.
Attn; Mr. H. Tumilty

SHIP TO
-Same-
Eclipse Fuel Engineering Co. of Canada Ltd.,
c/o Coast Tools Ltd.,

OUR ORDER No. 18448-C-79
OUR DATE Mar.11/68
CUSTOMER'S ORDER No.
CUSTOMER'S DATE
PRODUCT CODE 4-7-9

INVOICE NUMBER
INVOICE DATE
DATE SHIPPED
SHIPPED VIA

| SHIP VIA - F.O.B. OUR PLANT | SCHEDULED DATE | TERRITORY | FEDERAL TAX | PROVINCIAL TAX |
|---|---|---|---|---|
| C.P.R. | | 91 | | |

| QUANTITY ORDERED | ITEMS | UNIT PRICE | BACK ORDER | QTY. SHIPPED | INVOICE AMOUNT |
|---|---|---|---|---|---|
| | Order covers the supply of Equipment for 4 water tube propulsion boilers and one boiler as a standby boiler. | | | | |
| | SPECIFICATIONS | | | | |
| | Propulsion boilers | | | | |
| | Steam capacity 35,000 pph from and at 212°F --M.C.R. (maximum continuous rating) | | | | |
| | 37,500 pph overload or peak firing | | | | |
| | heavy oil #6 or Bunker C | | | | |
| | Electrics 110/1/60 | | | | |
| | Dry pneumatic air supplied at a minumum of 50 p.s.i.g. | | | | |
| | Operating steam pressure -320p.s.i.g. | | | | |
| | Maximum pressure -320 p.s.i.g. | | | | |
| | Relief Valve setting -325-327 | | | | |
| | DONKEY BOILER | | | | |
| | 9,000 pph from and at 212°F | | | | |
| | #6 or Bunker C oil | | | | |
| | 110/1/60 for controls - motor voltage not specified | | | | |
| | Operating pressure-120 p.s.ig. | | | | |
| | Maximum pressure -125 p.s.i.g. | | | | |
| | Relief valve setting-127 p.s.i.g. | | | | |
| | SUPERVISION - by others | | | | |
| | START-UP - Andy stated that the shore trials would be by Coast Tools and sea trials tentatively by Coast Tools and Eclipse. | | | | |
| | INSTRUCTION BOOKS -2 copies of instruction books unless otherwise advised. Books to be sent to attention of Mr. H. Tyson | | | | |
| | APPROVALS - CSA approval on our control panel. | | | | |
| | PRICE.....$75,000.00 | | | | |

TERMS:
ADDITIONAL TERMS ON REVERSE SIDE
DAYS NET 30
AND CONDITIONS

ACKNOWLEDGMENT

IMPORTANT

NO RETURNS WILL BE ACCEPTED UNLESS AUTHORIZED BY US IN WRITING.
RETURNS WILL BE SUBJECT TO HANDLING CHARGES

# ADDITIONAL TERMS AND CONDITIONS OF SALE

1. WARRANTY: The Company warrants equipment manufactured by it to be free from defective material or workmanship when properly installed and operated, its obligation under this warranty being limited to repairing or replacing any part or parts manufactured by it, which shall be returned to the Company within six months from date of shipment with transportation charges prepaid and which the Company's examination shall disclose to its satisfaction to be defective.

In the case of equipment or parts manufactured by others, the Company will give the buyer the benefit of such adjustment as the manufacturer makes with the Company.

This warranty is in lieu of all other conditions, warranties or guarantees express, implied or statutory, and except as herein set out the Company shall not be liable for injury or damage of any nature, direct, indirect, or consequential arising from defect, delay or any other cause. The Company gives no warranty as to the suitability for any purpose of equipment sold by it, except for the purpose, if any, expressly stated herein.

2. SHIPMENT DATES named herein are estimates only which the Company will attempt to meet.

3. CLAIM FOR SHORTAGES: Any claim for shortages or missing items of equipment must be made to the Company, in writing, within 30 days after receipt of shipment: Company assumes no responsibility for such shortage or missing items unless claim is so made.

4. TAXES: The price payable as shown hereon shall be increased by the amount of taxes on, or in respect of, the equipment or the sale thereof for which the Company may be liable, except any such taxes which are expressly included in the price stated herein.

5. APPLICABLE LAW: The contract shall be governed by the laws of Ontario.

6. TITLE: Notwithstanding anything herein contained it is expressly agreed that until payment in full of the price of the equipment, the title to and property in the equipment shall remain in the Company. If the buyer shall make any default in any payment or shall become insolvent or if the equipment or any part thereof shall be seized under any execution or legal process issued against the buyer or under any distress for rent, the whole of the unpaid balance of the price shall immediately become payable and the Company shall have the right at any time without notice to enter the premises where the equipment shall be situate and to retake possession of the equipment. The Company at its option may either retain the equipment as its own, in which case all payments previously made shall remain the property of the Company as liquidated damages and not as a penalty. Or, the Company may resell the equipment in such manner and on such terms as it may deem proper and upon resale when realized and received in cash, less all expenses and commissions in connection with retaking possession, repair, reconditioning and resale, original buyer's account will be credited and the buyer shall continue to be liable for any deficiency or shall be entitled to receive any surplus.

7. PRICE: Price shown on this quotation is firm, except for taxes, for a period of 90 days from date of quotation.

8. ACCEPTANCE will be consummated upon delivery of Customers Acknowledgement copy of Company's sales order which will denote acceptance of Buyer's purchase order or offer on the terms herein set out and no others. The said terms shall prevail over anything additional to, or inconsistent herewith, which may be set out in the said purchase order or offer.

ECLIPSE FUEL ENGINEERING CO. OF CANADA, LIMITED

ECLIPSE FUEL ENGINEERING CO. OF CANADA LIMITED

MEMORANDUM RE: CLAIMS FOR DAMAGE OR LOSS OF GOODS IN TRANSIT

(1) You become the owner of any shipments consigned to you at the time such shipments are delivered by us to the carrier. This is in accordance with our "F.O.B." Our Plant standard terms.

(2) Claims to cover damage to, or shortage of, goods received must be instituted by you against the carrier at the time of delivery or soon thereafter, but not later than ninety days after date of delivery.

(3) Claims must be submitted in writing to the carrier setting out particulars of:
- (a) The origin and date of shipment.
- (b) Destination of shipment.
- (c) Amount claimed in respect of damages or losses.

(4) Claims must be accompanied by:
- (a) Original bill of lading or a copy of it.
- (b) Original or copy of invoice covering shipment.
- (c) Correspondence or evidence relating to the claim.

(5) If detection of damage or shortage is made at the time of delivery, note such damage or shortage on the freight bill or delivery slip and have it witnessed by obtaining the signature of the agent of the Transportation Company.

(6) If detection of damage or shortage is made after delivery is completed:
- (a) Do NOT proceed with any further unpacking or handling of the goods.
- (b) Notify transportation company requesting them to send an inspector.
- (c) Request inspector to note particulars of damage or shortages on your copy of the Freight Bill and witness the same by signing it.

NOTE: By following the above procedure you will experience little difficulty in collection of your claims. You will receive our full co-operation and assistance in processing your claims, but we do not undertake to submit them for you, or to assume responsibility for collection of claims or replacement of goods.

ECLIPSE FUEL ENGINEERING COMPANY OF CANADA LIMITED

ACCOUNTING DEPARTMENT

FORM 1001

Canadian Pacific

Vancouver, B. C.
December 27th, 1967.

13913
13934.

H. J. Tumilty, Esq.
Assistant Superintendent (Engineering)
Victoria, B. C.

Reference my letter of December 14th to Mr. Fraine, regarding work to be carried out to the four Main Boilers and Donkey Boiler on the "Princess Marguerite".

For your private information, you will find attached copy of letter of December 20th received from Mr. W. Lin. Beattie of the Eclipse Fuel Engineering Co. of Canada Ltd. You will note that I have accepted his quotation, and that the amount of $75,000.00 is not to be exceeded. The Eclipse Fuel Engineering Co. fully realize this.

N. Tyson.
Manager,
Marine Operations.

attachment.

Eclipse

# ECLIPSE FUEL ENGINEERING CO.
## OF CANADA, LIMITED

*designers and manufacturers of heat process equipment*

PLANT & GENERAL OFFICES
DON MILLS, ONTARIO

20 UPJOHN ROAD, DON MILLS (TORONTO) ONTARIO • PHONE 444-6614

British Columbia Representitives:
Coast Tools Ltd., 535 East Hastings Street,
Vancouver 4, B. C. 253-7178

Vancouver, B. C.
20th December, 1967.

Canadian Pacific Railway,
Marine Operations,
Vancouver, B. C.

Attention: Mr. H. Tyson, Manager

Reference: Our Quotation V 9942 - G 79
Dated 15th December, 1967

Dear Mr. Tyson:

This letter is to confirm our discussions held in Mr. Tumilty's office on Monday.

The total quotation has been reduced to meet your budget price of $ 75,000.00. This has been made possible by the exclusion of additional labour and also the checking of the existing shipboard instruments.

It is the understanding that we will advise yourselves as to the condition of the instruments prior to repair or replacement. The entire proposal will be studied to check any other savings so that the complete program can be carried out.

All removal of equipment will be carried out by your own work force under our direction.

We thank you for the confidence that you have placed in our firm and we will do our utmost to live up to our obligations.

Yours very truly:

ECLIPSE FUEL ENGINNERING CO. OF CANADA LTD.

PER: W. L. Beattie
W. Lin. Beattie

ACCEPTED FOR THE CANADIAN PACIFIC, MARINE OPERATIONS.

By: H. Tyson.
H. Tyson.

Eclipse

DESIGNERS AND MANUFACTURERS OF HEAT PROCESS EQUIPMENT

# ECLIPSE FUEL ENGINEERING CO.
## OF CANADA, LIMITED

*PLANT AND GENERAL OFFICES:*
20 UPJOHN ROAD, DON MILLS, ONTARIO Phone HICKORY 4-6614

## QUOTATION

QUOTATION NO. V 9942 -C - 79

To Canadian Pacific Railway Co. Marine Operations.
Pier B, Vancouver, B. C.

Attn: Mr. H. Tyson, Manager.

F.O.B. Our Plant

DATE 15 December, 1967

TERMS
½ of 1% 10 DAYS
NET 30 DAYS

**WE ARE PLEASED TO QUOTE YOU ON THE FOLLOWING:**

| ITEM NO. | NO. OF UNITS | DESCRIPTION OF EQUIPMENT AND/OR SERVICES | PRICE |
|---|---|---|---|
| 1 | | Propulsion Boilers.<br><br>GENERAL - This proposal covers the supply and installation of ECLIPSE Register Oil fired burners in the four (4) main propulsion boilers of the T.S.S. Princess Marguerite.<br><br>SPECIFICATIONS Per Boiler:<br><br>Steam capacity: 35,000 P.P.H. from and at 212 Deg. F.<br>37,500 P.P.H. overload firings<br>Fuel: # 6 Bunker "C" oil<br>Oil Pressure - Nozzle 110 p.s.i.g. at250 deg. F.<br>Steam assist Pressure: 125 p.s.i.g.<br>Feed Water Temperature: to be specified later. Min. 200 deg.F.<br><br>SCOPE: The scope of this proposal covers the conversion of the four boilers from four burners each to three burners each and includes the necessary front wall refractory modifications.The necessary mechanical work needed to pipe the oil,steam and valves required. The inclusion of ECLIPSE manual hand lighter torches for torching the burners,is done to eliminate the use of oil swabs and the associated mess from the stokehold.<br><br>WORK AND SERVICES BY OWNERS:<br>The supply of necessary light,heat and water to the work area.<br>The removal of all debris and waste from the work area.<br>The removal and replacement of all necessary end or gauge<br><br>In order to avoid delay, when ordering please specify electrical, gas and air characteristics, when required. | |

cont'd on page 2

SUBJECT TO STANDARD CONDITIONS OF SALE ATTACHED

SHIPMENT: ..... AFTER RECEIPT OF ORDER

ECLIPSE FUEL ENGINEERING CO.
OF CANADA, LIMITED

# ECLIPSE FUEL ENGINEERING CO. OF CANADA, LIMITED



## CONTINUATION OF QUOTATION

Quotation No. V.9942 - C-79

To: Canadian Pacific Railway, Marine Operations.

| ITEM NO. | NO. OF UNITS | DESCRIPTION OF EQUIPMENT AND/OR SERVICES | PRICE |
|---|---|---|---|
| | | Work and services by owners cont'd. | |
| | | lines along with all thermocouple rund. | |
| | | Materials handling of equipment to deck adjacent to stokehold and storage of material prior to company's arrival on job. | |
| | | COMBUSTION EQUIPMENT: | |
| | | Twelve (12) ECLIPSE Steam Assisted Register oil burners complete with all valves, air register, air diffuser, oil gun and gun supports. | |
| 2 | | AUXILIARY BOILER: | |
| | | GENERAL: This proposal covers the conversion to single burner operation with the supply and installation of a single ECLIPSE Steam assisted oil fired register burner. | |
| | | SPECIFICATIONS: | |
| | | Steam Capacity: 9000 P.P.H. from and at 212 Deg. F. | |
| | | Fuel : # 6 Bunker "C" oil. | |
| | | Balance as per propulsion boilers. | |
| | | SCOPE: The scope of this section is to place the auxiliary boiler in operation using a single burner, modifying the boiler front and refractory to suit and to include all necessary valves, fittings and material and services for this conversion. | |
| | | WORK AND SERVICES BY OWNERS: Refer to section 1 - Propulsion Boilers. | |
| | | COMBUSTION EQUIPMENT: one only of above. | |
| | | TESTS AND COMMISSIONING: We propose to carry out startup and preliminary firing tests at dockside, Victoria, on all five boilers. The final tests and acceptance of the auxiliary boiler will be carried out at dockside. The final setting up, capacity tests, efficiency tests and acceptance of the boilers will be done during sea trials. | |
| | | These sea trials will be in two sections. The first consisting of aproximately one day for inital p[illegible] service tests and the second will be carried out on the run and will consist of the final tests for acceptance of the ships boiler conversion and as the | |

# ECLIPSE FUEL ENGINEERING CO. OF CANADA, LIMITED



## CONTINUATION OF QUOTATION

Quotation No. V 3942 - G79

To: Canadian Pacific Railway - Marine Operations.

| ITEM NO. | NO. OF UNITS | DESCRIPTION OF EQUIPMENT AND/OR SERVICES | PRICE |
|---|---|---|---|

Testing and commissioning cont'd:

training period for the Engineering staff of the vessel. This period is limited to a continous period not to exceed four calander days.

TERMS:
25% with order.
30% on delivery of material to shipside.
35% on completeon of installation.
10% on completion of sea trials.

PRICE:---------- $ 61,188.00

| | | |
|---|---|---|
| Less labour allowed for removal of old refractory material from fron walls of boilers | $ 425.00 | |
| Less labour allowed for the removal of existing oil burners | 150.00 | |
| Less labour allowed for the removal of oil piping at boiler fronts. | 75.00 | |
| Less labour allowed for disposal of waste material and depris | 100.00 | |
| Less allowance for rental of air compressor for refractory work. | 110.00 | |
| TOTAL DEDUCTION ---------- | | 860.00 |
| Net Contract---------- | | $ 60.328.00 |

OPTIONS:

ADD for providing new gauges for the following reference points: Windbox pressure
Furnace pressure
uptake draft
windbox temperature
enterance to superheater temperature
enterance to economiser temperature
economiser discharge temperature

These gauges are shown in our quotation enclosure. Draft and pressure gauges are "Cleveland". The temperature gauge is a "Thermovolt" indicating pyrometer.

# ECLIPSE FUEL ENGINEERING CO. OF CANADA, LIMITED



## CONTINUATION OF QUOTATION

Quotation No. V 9042 G 79

To: Canadian Pacific Railway Marine Operations.

| ITEM NO. | NO. OF UNITS | DESCRIPTION OF EQUIPMENT AND/OR SERVICES | PRICE |
|---|---|---|---|

OPTIONS CONT'D

| | |
|---|---|
| Five "multi point boiler draft gauges | $ 2000.00 |
| Two Pyrometers - indicating only | 520.00 |
| Twelve thermocouples | 588.00 |
| one lot t/c extention wire | 160.00 |

TOTAL ADDITIONS ---------- $ 3,268.00

ADD For converting the auxiliary boiler from manual to semi-automatic firing.
To supply and install the following:

1 only ECLIPSE flame safguard control panel which is C.S.A. approved and houses the following components: purge timer
ultra-violet flame relay
control relays and low fire interlock
Prewired to numbered terminal strip
Pilot lights and control switches as required to indicate sequence or alarm.

1 only main oil shut off valve.
1 only low water cutoff.
2 only steam pressure controls.
1 only remote mounted audible alarm.
1 only U/V main flame scanner.
1 only set of rate of fire controls consisting of:
forced draft damper
forced draft damper control
Characterised oil flow control valve
pneumatic actuators for the oil and air controls
pneumatic steam pressure control

ALL FIELD WIRING BY OWNERS ADD $ 5,815.00

Add For the supply, supervision of installation and calibration of a manual system of rate or fire control consisting of the following and operating the boilers as follows:

Canadian Pacific

Vancouver, B. C.
December 14th, 1967.

13913
T.68-101 PM.

J. N. Fraine, Esq.
Assistant Superintendent (Engineering)
Victoria, B. C.

Reference my letter of November 15th to Mr. K. A. Truman, regarding 1968 Appropriations for B.C. Coast Steamship Service. I had a discussion today with Mr. W. Lin Beattie of H.L. Industrial Consultants Limited and with Mr. A.B.K. Anderson, Chief Engineer, Eclipse Fuel Engineering Co. of Canada Ltd., who is here from Toronto, regarding steps to be taken to replace Burners and Four Main Boilers and Donkey Boiler on the "Princess Marguerite" in order to eliminate excessive smoke and to improve the combustion efficiency.

You will now find attached copy of report of survey and recommendation from H.L. Industrial Consultants Limited. This firm has been requested to confirm in writing the following:

(1) Cost of making the Donkey (auxiliary) Boiler fully automatic.

(2) The date of delivery after order is placed for gauges and other required instruments.

(3) Reduction in their estimate of $61,188.00, (Item One) of their quotation of December 4th, 1967, covering the boiler conversion should our own engineers and electricians carry out some of the work involved in dismantling the instruments, burners, etc.

(4) Reduction to be made in the sum of $14,995.00 shown under their options in their quotation of December 4th, 1967, should our own engineers perform some of the work in installing the equipment under their direction.

. . . 2

Vancouver, B. C.
December 14th, 1967.

13913
T. 68-101 PM.

J. N. Fraine, Esq.

For your ready information, copy of their quotation of December 4th, 1967 is attached.

With our own engineers performing some of the work and as they are required on duty in any case, the total cost involved in supplying the equipment and outside labour where necessary, should result in total expenditure being slightly under the amount of $75,000.00, included in the 1968 Appropriations.

In view of the time element involved in obtaining the equipment and after receipt of the further communication from this firm, it is my intention to have them order the equipment for delivery as soon as possible in 1968. Even after receipt of the equipment, as you will appreciate, there will also be time involved in the installation.

Mr. Anderson, Chief Engineer of Eclipse Fuel Engineering Co. of Canada Ltd. and Mr. W. Lin Beattie, will be meeting me in Victoria on December 18th to acquaint Mr. Anderson with the physical setup of the boiler room on the "Princess Marguerite". I telephoned Mr. H. Hanson today and informed him of the meeting so that a representative from his department could be on hand should it be possible for them to arrange this.

N. Tyson
Manager
Marine Operations.

c.c.o. W. Stewart, Supt.
Motive Power & Rolling Stock.

c.c. H.J. Tumilty, Esq.

Copy of report from H.L. Industrial Consultants Limited dated December 11, together with copy of quotation from Eclipse Fuel Engineering Co., is attached.

TELEPHONE:
253-7178

# H L INDUSTRIAL CONSULTANTS LIMITED

535 EAST HASTINGS STREET
VANCOUVER 4, B.C.
CANADA

December 11, 1967.

Mr. H. Tyson, Manager,
Marine Operation,
Canadian Pacific Railway,
Pier B, Vancouver, B.C.

Ref: Princess Marguerite

Dear Sir:

The following report has been prepared at the request of Mr. Hugh Tumilty, and is based on the two visits to the subject vessel, along with the mechanical drawings of said vessel. The first visit was made while the vessel was on the Victoria-Seattle run and the stokehold was observed under steam. The second inspection was carried out while the vessel was laid up for the winter. At this time an "internal" inspection was made of the propulsion boilers. The auxiliary boiler was still steaming and therefore no internal inspection was made.

FIRST INSPECTION:- GENERAL

On arriving at Victoria on September 12th, 1967, a meeting was held with Mr. Hugh Tumilty to discuss terms of reference for the inspection. The main point brought out was the excessive smoke being generated and the Port of Seattle's complaints about it. The second point was to improve the operation of the boilers and their efficiency. It was stated that a general inspection of the stokehold was to be carried out to determine any other problems that might be present.

We then boarded the ship and met the acting Chief, Mr. M. Locke, who arranged on-board accommodations for the trip. Mr. Walter Phillips, the Chief was at ships side and a general discussion of the existing problems was held.

Drawings of the ship were made available to us for perusal and notations. With Mr. Loc a general below-deck tour was made with special attention being directed to the four

Continued from Page 1.

propulsion boilers and one donkey boiler. The ship was then under way and the steaming up procedure was observed.

GENERAL OBSERVATIONS:

Condition of stokehold--dirty--this due to the loose boiler casings allowing soot to be expelled into the atmosphere.

Mechanical equipment--generally well maintained. Very little leakage at packing glands and joints.

Engine staff--extremely cooperative and of great assistance during inspection tours of vessel.

Propulsion boilers--boilers in need of major overhaul.

Casings:--very loose-require new gaskets and joint seals to eliminate sooting of stokehold and to permit proper firing of the boilers. Caulking required around the steam and mud drums.

Burners:--The present mechanical atomizing oil burners are not operating satisfactorily and are causing sooting and flame impingement on the boiler tubes. This is one of the major causes of the smoke. The air register and air control vanes are not in good shape. Some warping and distortion is present and preventing proper air control. Burner turndown is not good. Combustion at all firing rates is poor and control is difficult.

Oil System:--The oil handling and heating system is functional for the present system supplying heated oil under medium pressure for the mechanical oil guns. Internal cleaning of oil surfaces recommended.

Gauges and Instruments:---These are unserviceable. The boiler draft gauges are broken and the entire multipoint draft gauge is inoperative. The indicating pyrometer and its thermocouples are completely unserviceable. The carbon dioxide analyser has been removed and the pick-up points are plugged. Other boiler operating steam pressure and temperature gauges are suspect. Combustion air temperature indication is non existant.

Continued from Page 2

Economiser and Superheater:--The economiser is in a state of disrepair. The fins are plugged with soot and in some areas are melted out. There has been an attempt to remove some tube fins to improve gas travel through the economiser. The superheater is in need of a good cleaning. The superheater bypass damper assembly has been removed and the bypass duct bricked off. This is also true of the economiser bypass arrangement.

Stack:--An internal inspection of the stack revealed some buckling of the plates at expansion joints but no major problem.

Auxiliary Boiler: A firing inspection of this unit was carried out. No internal inspection was made as it was under fire to provide heat and domestic hot water during the second inspection. The firing of the boiler was poor, with severe flame inpingement and dumping of oil in the bottom of the fire tube. Refer to the propulsion boiler remarks for the report on the two burners.

Refractories: --Propulsion Boilers--the refractory condition is poor. The front walls all require replacement and two rear walls require major work.

Combustion Efficiency:--Number four boiler was tested on the run for oxygen in the flue gas. Eleven percent was found on steaming load. At the same time heavy smoke and traces of carbon monoxide were also present. This indicates serious combustion problems.

RECOMMENDATIONS:

General: A complete check on all stokehold equipment to be made as to each component's serviceability. All gauges, thermometers, instruments and indicating equipment to be cleaned, calibrated and if necessary be replaced. This is important to give your engine staff a point of origin to set up the systems. All reference lines to be blown out and-air tested for tightness. All internal surfaces be inspected for coating and/or scaling. All inspection ports to be repaired and replaced where necessary. A general housekeeping and painting be carried out during lay-up.

Continued from Page 3.

Boilers; All boiler casings to be removed, straightened, regasketed and replaced. Caulking required around boiler drums. The refractory to be modified as required under the heading of "Burners". The bypass dampers be reinstalled and placed in service to permit control of the superheat temperature and the economiser temperature. This is essential to give good control when correct firing is established. The superheater would be able to be controlled without having to sacrifice boiler efficiency. The economiser operation would be improved and any chance of fin damage would be reduced by the control of the amount of stack gases being passed through it.

Combustion Equipment: The combustion equipment as presently installed is not satisfactory for its use. The oil guns are mechanical atomizing guns which are installed in the boilers with slide type air adjusters. The design of the air adjusters is intended to provide flame pattern control but are unable to give satisfactory adjustment. It is therefore recommended that "Eclipse" register burner be installed in place of the entire burner. The "Eclipse" steam assisted oil gun be used. The steam assisted gun is recommended because of the tight cubic area of the combustion chamber and especially the short inline length for flame burn out. It would be difficult to accomplish this with a mechanical atomized oil gun. The steam assisted gun uses approximately 0.1 p p h steam/ p p h oil. The flame control is very good, producing controlled burn out. The top burner would be removed and the boilers would be fired with three burners producing the same output of steam. The excess air would then be able to be controlled, giving much higher combustion and thermal efficiencies and greatly reduced maintenance costs. The operating costs per pound of steam produced would be down. The savings obtained would help to write off the capital expenditure required. The fuel-air ration would be able to be closely maintained and the emission of noticeable smoke would be eliminated. The steam required for the steam assist would be taken from the donkey boiler, thus no desuperheater would be required. The steam pressure would be a maximum of 125 psig. and variable throughout the entire turndown range of each burner or group of burners. The steam to oil differential would be maintained by the use of a

Continued from Page 4.

differential steam pressure controller. The existing oil handling equipment is functional for the steam assist units being recommended,as the oil supply pressure to the guns would be approximately 110 psig. nominal.

Refractory: The refractory material on the front walls of the boilers must be replaced and the design of the new refractory must be in accordance with the burner manufacturer's recommendations. The material should be a high duty ram mix refractory to withstand the high heat release of these boilers.

Rate of Fire Control: To obtain the optimum efficiency of these boilers a basic system of fuel flow/air flow should be incorporated into the system. A simple type of such a system is the installation of air dampers on the discharge of the supply fan and the control of these dampers by a pneumatic actuator, complete with a positive positioner. This damper working in conjunction with an adjustable cam pneumatically operated oil valve ~~which~~ will parallel the fuel to air. The control of this system is by the Stoker on watch by means of a manual pneumatic positioning regulator. This positioner controls the pneumatic signal to both the fuel valve and also to the air damper operator. The fuel-air ration is thus maintained to give close excess oxygen control in the stack gases. This system installed on each of the four propulsion boilers would be able to be adapted to a semi-automatic system at your convenience.

Installation of above Equipment: The installation of the revised combustion equipment should be carried out by the manufacturer to make sure of its correct operation. Miscellaneous work can be carried out by ship's engine staff. All equipment should be checked under sea trials to ensure its proper operation throughout the entire required range of operation.

Auxillairy Boiler: This boiler should be converted from a two burner to a single burner boiler. A single "Eclipse" register burner would give better flame pattern in a firetube type of boiler. The flame impingement on the rear tubes is a result of too long a flame. The boiler front would be modified to suit the single burner installation Fuel/air ratio control is also recommended for this boiler.

Continued from page 5.

Smoke Recorder: A photoelectric smoke indicator or recording device can be installed in the stack to record or indicate the presence of smoke in either the forward or aft sets of boilers. This could be arranged to give visual or audio alarm to tell the on-watch stoker of trouble.

General Comments: This vessel, when correctly modified,will give satisfactory operation of the stokehold and you should yield the results of increased operating efficiency. The working conditions as presently endured by your stokers is prohibitive. A definite health hazard exists. The tightening of the boiler casings will permit pressure firing of the combustion chamber and thus better control and efficiency. A sea trial training program should be carried out while on the run. The dock-side run in of equipment is recommended to "get the bugs out" of the system prior to sailing. It is necessary to get these modifications underway quickly to permit completion and testing prior to placement of the ship in service.

Recapitulation: It is not the purpose of this report to be critical of the engineering staff of this ship nor to cast any blame for the condition on them. Rather, it is intended to point out the areas of neglect of the equipment and the short comings of design which have caused the bulk of the problems. The use of mechanical firing at sea has been used to eliminate the usage of water which cannot be reclaimed. The advent of the steam assisted gun has reduced the steam to oil ration to a minimum. The flame control is much superior to that of a low pressure mechanical gun and the cost of equipment for high pressure atomization is very expensive.

Should you carry out the recommendations of this report, we feel assured that the smoke problem and the sooting of the stokehold will be eliminated. The undersigned will be responsible for supervision and commissioning of the equipment to ensure their correct selection and installation. This work to be incorporated in the quotation for this equipment. Shop drawings to be provided to show intended work. The carrying out of the additional work mentioned in this report, ie, gauges, instrumentation, smoke alarms, boiler work (bypass dampers, etc.) and any additional work requested can be

Continued from Page 6.

incorporated into the quotation at your discretion.

This report has been prepared from my observations during the two inspections carried out and from the discussions held with the ship's personnel and your Shore Superintendent and is complete to the best of my knowledge, from the date available.

W. LIN BEATTIE.

Eclipse

DESIGNERS AND MANUFACTURERS OF HEAT PROCESS EQUIPMENT

# ECLIPSE FUEL ENGINEERING CO.
## OF CANADA, LIMITED

*PLANT AND GENERAL OFFICES:*
20 UPJOHN ROAD, DON MILLS, ONTARIO Phone HICKORY 4-6614

## QUOTATION

QUOTATION NO. V 9942 - G 79

To Canadian Pacific Railway - B. C. Coast Steamship Service,
Vancouver, B. C.

F.O.B. Our Plant

DATE 4th December 1967

TERMS
½ of 1% 10 DAYS
NET 30 DAYS

*WE ARE PLEASED TO QUOTE YOU ON THE FOLLOWING:*

| ITEM NO. | NO. OF UNITS | DESCRIPTION OF EQUIPMENT AND/OR SERVICES | PRICE |
|---|---|---|---|
| 1 | | Princess Marqurette Boiler Conversion.<br><br>GENERAL :<br>This preposal covers the conversion of the four (4) main propultion boilers and the one (1) aux. Boiler onboard the subject ship. This proposal includes the supply and installation of three (3) ECLIPSE steam assist register burners per boiler and one (1) on the aux. boiler.<br><br>SPECIFICATIONS:<br>The following data is per boiler (propultion units)<br>Capacity: 35,000 p.p.h from and at 212°F overload 37,500 p.p.h<br>Fuel: #6 Bunker "C" fuel oil.<br>Steam - Nozzle assist - 125 p.s.i.g.<br>Oil pressure nominal 110 p.s.i.g.<br><br>SCOPE:<br>This proposal covers the following:<br>To modify the boiler fronts to receive the ECLIPSE burners.<br>To remove and replace the front walls of the boilers.(refracrory only)<br>To supply and install the necessary pipe, fittings, and control equipment to regulate the steam assist system.<br>To modift the fuel oil piping to accomidate the ECLIPSE burners.<br>To supply ECLIPSE hand lighter torches to light off the burners.<br><br>Work and services by OWNERS:<br><br>The supply necessary electric power to work area.<br>The supply of water to work area.<br><br>In order to avoid delay, when ordering please specify electrical, gas and air characteristics, when required. | ---- cont'd |

SUBJECT TO STANDARD CONDITIONS OF SALE ATTACHED

SHIPMENT:
AFTER RECEIPT OF ORDER

ECLIPSE FUEL ENGINEERING CO.
OF CANADA, LIMITED

# ECLIPSE FUEL ENGINEERING CO. OF CANADA, LIMITED



## CONTINUATION OF QUOTATION

Quotation No. V 9942 -G -79

To: Canadian Pacific Railway.

| ITEM NO. | NO. OF UNITS | DESCRIPTION OF EQUIPMENT AND/OR SERVICES | PRICE |
|---|---|---|---|

Work and services by owners - cont'd.
To make available dollys for material and rubish handling to and from dockside.
Receiving and storage of material at dockside pending the arrival of repair crews.

TESTS AND COMMISSIONING
We have proposed to carry out firing tests at dockside on each boiler and to carry out SEA TRIALS for a period not to exceed fivr (5) days at which time the Engine Staff will be instructed on the correct usage of the new ECLIPSE combustion equipment.

TERMS:

25% with order
30% on delivery of material to shipside.
35% on completion of installation.
10% on completion of seatrials.

PRICE:------- Sixty-one thousand,one hundred and eighty-eight dollars. $ 61,188.00

OPTIONS:
As an addition to the above proposal we would recommend the installation of a basic combustion control system for the control of the fuel/air ratio and rate of fire control.
This system would incorporate the use of air dampers in the outlet of each fan ( forced draft) and the supply and installation of pneumatic caracteristic type oil valve and pneumatic damper actuators complete with positive positioners and manual regulation of the rate of fire control.
This system supplied, installed and calibrated for the additional amount of Fourteen thousand nine hundred and nitety-five dollars. 14,995.00

Complete drawings, instruction books and parts lists will be provided on receipt of order.

Submitted by:

W.Lin. Beattie.

ECLIPSE FUEL ENGINEERING CO
OF CANADA, LIMITED

CANADA'S MOST COMPLETE REFRACTORY SERVICE
A. P. Green REFRACTORY PRODUCTS
SERVE THE WORLD'S INDUSTRIES

*Quotation and Specifications*

# A. P. GREEN FIRE BRICK CO. LTD.

VANCOUVER 4, B.C.

*Our new address!*
A. P. GREEN REFRACTORIES (CANADA) LTD.
638 DERWENT WAY • ANNACIS INDUSTRIAL ESTATE
NEW WESTMINISTER, B.C.
TEL. 522-2801

January 26, 1968.

Quotation No. VJ 6008-68

TO: Canadian Pacific Steamship Lines,
468 Belleville,
Victoria, B.C.

Attention: Mr. Hugh Tumilty,
Sup't. of Marine Services

Subject: Repairs to C.P.R. Steamship
Princess Marguerite

FOR: 1. Supply and installation of refractory materials to rebuild rear wall in No. 2 and No. 4 Boilers on a lump sum contract basis.

2. Supply and installation of refractory materials to do miscellaneous repair work in Boilers No. 1, 2, 3, 4 and auxiliary or donkey boiler, on a "Time and Materials" basis.

## PROPOSAL NO. 1

## SCOPE OF WORK

Tear-out of repair areas and removal of debris to be carried out by the Purchaser.

This Contractor to replace the rear wall (within a general diameter of approximately 8'-6") with 6" A.P. Green's Greenpak 80, 80% Alumina Plastic Fire Brick, backed with ½" asbestos millboard. Plastic to be suitably anchored with A.P. Green's Special VC style 310 Stainless Steel Anchors.

Freight and Cartage - is included to dock site, C.P.R. Docks, Victoria, B.C.

Labour - All labour is based on being carried out during regular daytime shifts.

Workmen's Board and Lodging - is included in this proposal.

Continued Page 2.....

Workmen's Travel Time and Travel Expense is included.

The Following Items To Be Supplied by the Purchaser at No Expense to This Contractor

1. Tear-out of repair areas.
2. Removal and disposal of debris.
3. Unloading, handling and storage of this Contractor's material and equipment.
4. Moving and handling this Contractor's material and equipment from storage to front of each boiler.
5. Compressed air 100 c.f.m. @ 100 psi.
6. Welding of anchors.

TAXES: Federal Sales Tax is Exempt on refractories, Extra where applicable.

5% B.C. SS & MA Tax is Extra.

## ALTERNATE FOR PROPOSAL NO. 1

As an alternative for proposal no. 1, all conditions remain the same excepting the rear wall to be rebuilt with 6" A.P. Green's 70% High Alumina Plastic in place of Greenpak 80.

## PROPOSAL NO. 2

SCOPE OF WORK (Time and Material Basis)

This Contractor to undertake the supply and installation of certain materials to carry out miscellaneous repairs on side chambers in Boilers #1, 2, 3 and 4, as well as miscellaneous repair work on the auxiliary or "donkey" boiler.

In regard to Boiler #1, 2, 3 and 4, painting and patching to be done on the inboard side walls up to and around the superheaters and economisers, as well as some resetting of existing tile.

Continued Page 3.....

Drum protection or seal to be provided along the drum at bottom inboard side of drum near top edge of tubes.

With respect to the auxiliary or donkey boiler, miscellaneous painting and patching to be done on right, rear side adjacent to the inspection port.

The aforementioned work will require approximately 1700 lbs. High Alumina Plastic and some 700 lbs. T-36 refractory cement. It is estimated that the work mentioned above could be completed by one mason and one helper in about 4 days.

Conditions outlined in Proposal No. 1 to apply.

LUMP SUM PRICE:

| | Amount | F.S.T. | B.C. Tax |
|---|---|---|---|
| Proposal #1 | $2307.00 | $12.65 | $76.00 |
| Proposal #1 Alternate | $2130.00 | $12.65 | $68.00 |

Approximate price to carry out work outlined in Proposal No. 2 and done on a Time and Material basis:

Approximately .....$775.00

F.S.T. nil
B.C. Tax $15.00 approx.

ERA/ch

# CONTRACT CONDITIONS

Agreement Between: Canadian Pacific Steamship Lines

of the City of Victoria in the Province of British Columbia

hereinafter called the "PURCHASER", and A.P. Green Refractories (Canada) Ltd.

~~A.P. Green Fire Brick Co. Limited~~ of the City of New Westminster

in the Province of British Columbia

hereinafter called the "CONTRACTOR"

1. **Proposal:** The detailed proposal and specifications attached hereto are to be considered part of this Agreement.
2. **Location:** Where the work covered by this Proposal is to be performed at a location other than that of the Purchaser's plant or place of business, it is agreed that the responsibilities of the Purchaser and of the Contractor will be the same as if the work were performed at the Purchaser's plant or place of business.
3. **Tearing Out:** In tearing out those areas specified to be torn out, it is sometimes impossible to save the sections adjoining the repair. Should this difficulty arise, the Contractor will endeavour to prevent the collapse of such sections. However, should a collapse occur, such additional work and/or materials as required will be charged to the Purchaser at the Contractor's current rates and prices on a cost plus basis unless covered by a supplementary contract.
4. **Excavation:** Where the proposal requires excavation, and any unusual obstruction is encountered (such as old foundations, structural steel work, sewer and water pipes, rocks, boulders, water, quicksand etc.), removal thereof and preparation of the foundation shall be charged by the Contractor to the Purchaser as an extra on a cost plus basis.
5. **Delays and Continuity:** The Purchaser agrees that the Contractor shall not be responsible for any delays or defaults in workmanship under this contract which are the result of strikes, accidents, fires, acts of God, or any other unavoidable delays which are beyond the Contractor's reasonable control. The Contractor's costs are based on doing all of the erection work in accordance with his work schedule with a crew of reasonable size. If delays for which the Contractor is not responsible prevent the work from being accomplished expeditiously, and additional travel or job mobilization costs are incurred, the same shall be paid by the Purchaser.
6. **Overtime:** The field supervision and labour costs included herein are based on working only during hours for which no overtime or premium pay is required in accordance with local Union contracts, unless stipulated under Specifications.
7. **Storage:** The Purchaser agrees to provide or arrange storage of the Contractor's materials, tools and supplies in a location on the jobsite adjacent to the working area and agreeable to the Contractor; under cover and in a manner that will prevent their damage by frost, heat, water and other physical or natural conditions. It is agreed that there will be no charge to the Contractor for such services.
8. **Protection:** The Purchaser agrees to provide protection against theft or damage to the Contractor's materials, tools and supplies while they are on the job site.
9. **Utilities:** The Purchaser agrees to provide all necessary heat, light, power and water required to complete the work, at no charge to the Contractor. Standard outlets for electrical extensions, electrical equipment, water service, shall be provided within Fifty feet of the work. Any wiring required to connect this Contractor's equipment to existing utilities shall be provided by the Purchaser at no cost.
10. **Control:** It is understood that the Contractor is to be given full control over the area to be worked on in accordance with his schedule, and that ample working space outside the vessel or enclosure will be provided for his working area.
11. **Materials:** The Contractor guarantees that all refractory materials used will be as good as, or better than A.S.T.M. specifications; and that all other materials used will be of good standard quality. All materials to be installed in accordance with the manufacturer's standard practices and recommendations.
12. **Maturing:** It is understood that the Purchaser will burn in or mature the installation in strict accordance with the Contractor's instructions. Failure to properly mature the installation will relieve the Contractor from any and all further responsibility.
13. **Workmen's Compensation Insurance:** All workmen in the Contractor's employ will be covered by the Workmen's Compensation Act of the Province in which the work is to be performed. Where there is no such Act, the Contractor's employees will be covered by Employer's insurance arranged by the Contractor.
14. **Insurance:** Public liability and Property Damage insurance in the amount of $1,000,000.00 inclusive, will be carried by the Contractor during the construction or repair period.
15. **Terms:** It is agreed that payment is to be made by the Purchaser in Canadian dollars as follows: 50% on delivery of materials, 30% on completion of work, 20% thirty days after completion of work. It is further agreed that the 50% and 30% payments are to be considered due and payable by the Purchaser without notice from the Contractor and that there are no provisions in this agreement that provide for the withholding of such payments. It is further agreed that any additional charges made by the Contractor through the exercise of any provisions within this agreement will become due and payable thirty days from the date of the Contractor's invoice for such extra charges.
16. **Guarantee:** The Contractor guarantees his work for a period of one (1) year from completion of work against defects in workmanship. The Purchaser shall give prompt notice to the Contractor of any observed defects. The Contractor shall not be liable for back charges incidental to field changes or correction of workmanship performed hereunder unless ample opportunity is given the Contractor to inspect the workmanship claimed to be defective, and then only after the field changes or corrections have been authorized in writing by the Contractor. This guarantee is in lieu of all guarantees, expressed or implied.
17. **Sales Tax:** It is understood, unless otherwise specified, that the contract price does not include sales tax and that same will be extra, if and where applicable.
18. **Escalation:** This agreement is for a firm price based on prices currently in effect. However, should there be any increase or decrease in labour rates, freight rates or material prices between the date of the proposal and the date of the completion of the work, it is agreed that a corresponding revision will be made in the contract amount to give effect to such changes.
19. **Errors in Drawings:** The Contractor will not be responsible for errors and/or changes in blueprints when such prints are furnished by the Purchaser or one of the Purchaser's other contractors.
20. **Acceptance:** Acceptance by the Purchaser and the Contractor shall constitute an agreement that there are no representations, warranties, collateral agreements, conditions express or implied statutory or otherwise with respect to the work to be done on this contract, or affecting the rights of the parties other than as specifically contained herein. This agreement is subject to acceptance by the Purchaser within _____ days of the date of the Contractor's proposal.

Acceptance of Quotation No. VJ 6008-68 Proposal No. _____ together with specifications and conditions as detailed herein.

Date _____ 19____ Purchaser _____

Per _____ Title _____

Contractor A. P. GREEN ~~FIRE BRICK CO. LIMITED~~ Refractories (Canada) Ltd.

Date January 26 19 68 Per E.R. Armstrong Title Eng. Dept.

FORM G126

# ECLIPSE FUEL ENGINEERING CO.

## OF CANADA LTD.

20 UPJOHN ROAD, DON MILLS, ONTARIO

SOLD TO
C.P.R. Marine Div.,
TSS Princess Marguerite
Victoria, B.C.
Attn; Mr. H. Tumilty

SHIP TO
-Same-
Eclipse Fuel Engineering Co. of Canada Ltd.,
c/o Coast Tools Ltd.,

OUR ORDER No. 18440-C-79
OUR DATE Mar.11/68
CUSTOMER'S ORDER No.
CUSTOMER'S DATE
PRODUCT CODE 4-7-9

INVOICE NUMBER 36798
INVOICE DATE June 7, 1968
DATE SHIPPED Completed by
SHIPPED VIA June 7, 1968

| SHIP VIA - F.O.B. OUR PLANT | SCHEDULED DATE | TERRITORY | FEDERAL TAX | PROVINCIAL TAX |
|---|---|---|---|---|
| C.P.R. | | 91 | Exempt | |

| QUANTITY ORDERED | ITEMS | UNIT PRICE | BACK ORDER | QTY. SHIPPED | INVOICE AMOUNT |
|---|---|---|---|---|---|
| | Order covers the supply of Equipment for 4 water tube propulsion boilers and one donkey boiler | | | | |
| | SPECIFICATIONS | | | | |
| | Propulsion boilers | | | | |
| | Steam capacity 35,000 pph from and at 212°F --M.C.R. (maximum continuous rating) 37,500 pph overload or peak firing Heavy oil #6 or Bunker C Electrics 110/1/60 Dry pneumatic air supplied at a minimum of 50 p.s.i.g. Operating steam pressure -320p.s.i.g. Maximum pressure -320 p.s.i.g. Relief Valve setting -325-327 | | | | $75,000.00 |
| | Add: 4-40 USGPH Oil Nozzles, requested as an extra @ 39.00 | | | | 156.00 |
| | | | | | 75,156.00 |
| | less: Progress billing #35846 | | | | (11,250.00) |
| | 36108 | | | | (37,500.00) |
| | 36427 | | | | (11,250.00) |
| | | | | | 15,156.00 |
| | DONKEY BOILER | | | | |
| | 9,000 pph from and at 212°F #6 or Bunker C oil 110/1/60 for controls - motor voltage not specified Operating pressure-120 p.s.i.g. Maximum pressure -125 p.s.i.g. Relief valve setting-127 p.s.i.g. | | | | |
| | SUPERVISION - by others | | | | |
| | START-UP - Andy stated that the shore trials would be by Coast Tools and sea trials tentatively by Coast Tools and Eclipse. | | | | |
| | INSTRUCTION BOOKS -2 copies of instruction books unless otherwise advised. Books to be sent to attention of Mr. H. Tyson | | | | |
| | APPROVALS - CSA approval on our control panel. | | | | |
| | PRICE.....$75,000.00 | | | | |

DITTOFORMS

TERMS: ½% 10 DAYS NET 30

ADDITIONAL TERMS AND CONDITIONS ON REVERSE SIDE.

INVOICE

IMPORTANT

NO RETURNS WILL BE ACCEPTED UNLESS AUTHORIZED BY US IN WRITING.
RETURNS WILL BE SUBJECT TO HANDLING CHARGE.

# ADDITIONAL TERMS AND CONDITIONS OF SALE

1. WARRANTY: The Company warrants equipment manufactured by it to be free from defective material or workmanship when properly installed and operated, its obligation under this warranty being limited to repairing or replacing any part or parts manufactured by it, which shall be returned to the Company within six months from date of shipment with transportation charges prepaid and which the Company's examination shall disclose to its satisfaction to be defective.

In the case of equipment or parts manufactured by others, the Company will give the buyer the benefit of such adjustment as the manufacturer makes with the Company.

This warranty is in lieu of all other conditions, warranties or guarantees express, implied or statutory, and except as herein set out the Company shall not be liable for injury or damage of any nature, direct, indirect, or consequential arising from defect, delay or any other cause. The Company gives no warranty as to the suitability for any purpose of equipment sold by it, except for the purpose, if any, expressly stated herein.

2. SHIPMENT DATES named herein are estimates only which the Company will attempt to meet.

3. CLAIM FOR SHORTAGES: Any claim for shortages or missing items of equipment must be made to the Company, in writing, within 30 days after receipt of shipment: Company assumes no responsibility for such shortage or missing items unless claim is so made.

4. TAXES: The price payable as shown hereon shall be increased by the amount of taxes on, or in respect of, the equipment or the sale thereof for which the Company may be liable, except any such taxes which are expressly included in the price stated herein.

5. APPLICABLE LAW: The contract shall be governed by the laws of Ontario.

6. TITLE: Notwithstanding anything herein contained it is expressly agreed that until payment in full of the price of the equipment, the title to and property in the equipment shall remain in the Company. If the buyer shall make any default in any payment or shall become insolvent or if the equipment or any part thereof shall be seized under any execution or legal process issued against the buyer or under any distress for rent, the whole of the unpaid balance of the price shall immediately become payable and the Company shall have the right at any time without notice to enter the premises where the equipment shall be situate and to retake possession of the equipment. The Company at its option may either retain the equipment as its own, in which case all payments previously made shall remain the property of the Company as liquidated damages and not as a penalty. Or, the Company may resell the equipment in such manner and on such terms as it may deem proper and upon resale when realized and received in cash, less all expenses and commissions in connection with retaking possession, repair, reconditioning and resale, original buyer's account will be credited and the buyer shall continue to be liable for any deficiency or shall be entitled to receive any surplus.

7. PRICE: Price shown on this quotation is firm, except for taxes, for a period of 90 days from date of quotation.

8. ACCEPTANCE will be consummated upon delivery of Customers Acknowledgement copy of Company's sales order which will denote acceptance of Buyer's purchase order or offer on the terms herein set out and no others. The said terms shall prevail over anything additional to, or inconsistent herewith, which may be set out in the said purchase order or offer.

**ECLIPSE FUEL ENGINEERING CO. OF CANADA, LIMITED**

# ECLIPSE FUEL ENGINEERING CO.

## OF CANADA LTD.

20 UPJOHN ROAD, DON MILLS, ONTARIO

SOLD TO
C.P.R. Marine Div.,
TSS Princess Marguerite
Victoria, B.C.
Attn; Mr. H. Tumilty

SHIP TO
-Same-
Eclipse Fuel Engineering Co. of Canada Ltd.,
c/o Coast Tools Ltd.,

OUR ORDER NO. 18448-C-79
OUR DATE Mar.11/68
CUSTOMER'S ORDER No.
CUSTOMER'S DATE
PRODUCT CODE 4-7-9

INVOICE NUMBER 36798
INVOICE DATE June 7, 1968
DATE SHIPPED Completed by
SHIPPED VIA June 7, 1968

| SHIP VIA - F.O.B. OUR PLANT | SCHEDULED DATE | TERRITORY | FEDERAL TAX | PROVINCIAL TAX |
|---|---|---|---|---|
| C.P.R. | | 91 | Exempt | |

| QUANTITY ORDERED | ITEMS | UNIT PRICE | BACK ORDER | QTY. SHIPPED | INVOICE AMOUNT |
|---|---|---|---|---|---|
| | Order covers the supply of Equipment for 4 water tube propulsion boilers and one donkey boiler | | | | |
| | SPECIFICATIONS | | | | |
| | Propulsion boilers | | | | |
| | Steam capacity 35,000 pph from and at 212°F --M.C.R. (maximum continuous rating) 37,500 pph overload or peak firing Heavy oil #6 or Bunker C Electrics 110/1/60 Dry pneumatic air supplied at a minimum of 50 p.s.i.g. Operating steam pressure -320p.s.i.g. Maximum pressure -320 p.s.i.g. Relief Valve setting -325-327 | | | | $75,000.00 |
| | Add: 4-40 USGPH Oil Burners, requested as on extra @ 39.00 | | | | 156.00 |
| | | | | | 75,156.00 |
| | DONKEY BOILER | | | | |
| | 9,000 pph from and at 212°F #6 or Bunker C oil 110/1/60 for controls - motor voltage not specified Operating pressure-120 p.s.i.g. Maximum pressure -125 p.s.i.g. Relief valve setting-127 p.s.i.g. | | | | |
| | less: Progress Billing #35846 | | | | (11,250.00) |
| | 36108 | | | | (37,500.00) |
| | 36427 | | | | (11,250.00) |
| | | | | | 15,156.00 |
| | SUPERVISION - by others | | | | |
| | START-UP - Andy stated that the shore trials would be by Coast Tools and sea trials tentatively by Coast Tools and Eclipse. | | | | |
| | INSTRUCTION BOOKS -2 copies of instruction books unless otherwise advised. Books to be sent to attention of Mr. H. Tyson | | | | |
| | APPROVALS - CSA approval on our control panel. | | | | |
| | PRICE..... | $75,000.00 | | | |

DITTOFORMS

TERMS: ½% 10 DAYS NET 30

ADDITIONAL TERMS AND CONDITIONS ON REVERSE SIDE.

INVOICE

IMPORTANT

NO RETURNS WILL BE ACCEPTED UNLESS AUTHORIZED BY US IN WRITING.
RETURNS WILL BE SUBJECT TO HANDLING CHARGE.

# ADDITIONAL TERMS AND CONDITIONS OF SALE

1. WARRANTY: The Company warrants equipment manufactured by it to be free from defective material or workmanship when properly installed and operated, its obligation under this warranty being limited to repairing or replacing any part or parts manufactured by it, which shall be returned to the Company within six months from date of shipment with transportation charges prepaid and which the Company's examination shall disclose to its satisfaction to be defective.

In the case of equipment or parts manufactured by others, the Company will give the buyer the benefit of such adjustment as the manufacturer makes with the Company.

This warranty is in lieu of all other conditions, warranties or guarantees express, implied or statutory, and except as herein set out the Company shall not be liable for injury or damage of any nature, direct, indirect, or consequential arising from defect, delay or any other cause. The Company gives no warranty as to the suitability for any purpose of equipment sold by it, except for the purpose, if any, expressly stated herein.

2. SHIPMENT DATES named herein are estimates only which the Company will attempt to meet.

3. CLAIM FOR SHORTAGES: Any claim for shortages or missing items of equipment must be made to the Company, in writing, within 30 days after receipt of shipment: Company assumes no responsibility for such shortage or missing items unless claim is so made.

4. TAXES: The price payable as shown hereon shall be increased by the amount of taxes on, or in respect of, the equipment or the sale thereof for which the Company may be liable, except any such taxes which are expressly included in the price stated herein.

5. APPLICABLE LAW: The contract shall be governed by the laws of Ontario.

6. TITLE: Notwithstanding anything herein contained it is expressly agreed that until payment in full of the price of the equipment, the title to and property in the equipment shall remain in the Company. If the buyer shall make any default in any payment or shall become insolvent or if the equipment or any part thereof shall be seized under any execution or legal process issued against the buyer or under any distress for rent, the whole of the unpaid balance of the price shall immediately become payable and the Company shall have the right at any time without notice to enter the premises where the equipment shall be situate and to retake possession of the equipment. The Company at its option may either retain the equipment as its own, in which case all payments previously made shall remain the property of the Company as liquidated damages and not as a penalty. Or, the Company may resell the equipment in such manner and on such terms as it may deem proper and upon resale when realized and received in cash, less all expenses and commissions in connection with retaking possession, repair, reconditioning and resale, original buyer's account will be credited and the buyer shall continue to be liable for any deficiency or shall be entitled to receive any surplus.

7. PRICE: Price shown on this quotation is firm, except for taxes, for a period of 90 days from date of quotation.

8. ACCEPTANCE will be consummated upon delivery of Customers Acknowledgement copy of Company's sales order which will denote acceptance of Buyer's purchase order or offer on the terms herein set out and no others. The said terms shall prevail over anything additional to, or inconsistent herewith, which may be set out in the said purchase order or offer.

**ECLIPSE FUEL ENGINEERING CO. OF CANADA, LIMITED**

# fireye FLAME SAFEGUARD CONTROL SYSTEM with UV-eye ULTRAVIOLET SCANNER for

## MANUAL/SEMI-AUTOMATIC OIL, GAS and COAL BURNERS

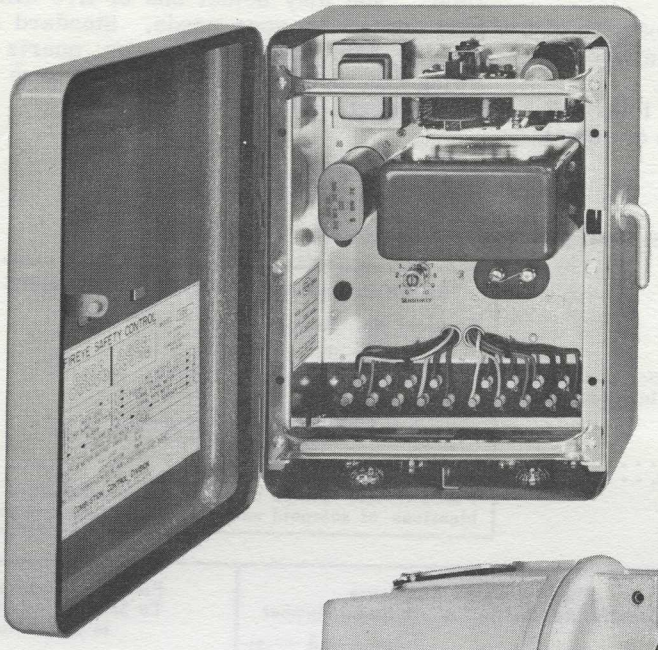

CONTROL
◀ TYPE 25SU5
MODEL 1100

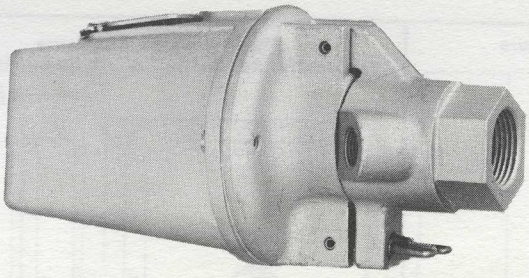

SCANNER TYPE 45UVI

MODEL 1102 — STANDARD MOUNT

MODEL 1105 — HINGED MOUNT

fireye
COMBUSTION CONTROL DIVISION
ELECTRONICS CORPORATION OF AMERICA
ONE MEMORIAL DRIVE, CAMBRIDGE 42, MASSACHUSETTS
IN CANADA: Electronics Corporation of America (Canada) Ltd.,
104 Advance Road, Toronto 18, Ontario

COAST TOOLS LIMITED
"Tooling for Industry"
VANCOUVER, B.C.

# BULLETIN CU-11-S

## APPLICATION:

Fireye System UVP-4 provides ignition and flame failure protection for manually or semiautomatically ignited, oil, gas, pulverized fuel, or combination fuel burners. The UVP-4 System consists of a control Type 25SU5 and Type 45UV1 U-V-eye scanner to supervise visually oil, gas or pulverized fuel flames.

The UVP-4 System monitors both pilot and main flames and is designed to de-energize all fuel valves within 4 seconds following loss of flame. Manual restart is required following any shutdown.

The control provides for the direct connection of limit switches, air flow switches, starting interlocks and fuel pressure and temperature switches.

The UVP-4 System includes a safe start interlock whereby component failure, or the presence of actual or simulated flame prior to startup will prevent burner operation.

The 25SU5 affords the advantages of a completely transistorized, printed electronic circuit, a sensitivity control which provides a gain of twenty to one and voltage regulation.

The 45UV1 U-V-eye scanner has a rugged cast aluminum housing, designed to meet the demanding requirements of the utility and large power boiler field. You may select one of five different models best suited to your needs. Standard scanners are offered with collecting lenses, quartz windows and swing-out mounts. All scanners have provision for air purging.

## SPECIFICATIONS:

**Fireye System UVP4, consisting of Control Type 25SU5, Model 1100, and Scanner Type 45UV1**

SUPPLY VOLTAGE at 60 cycles, 1 phase:
120 volts (Min. 102v, Max. 132v)

VOLT-AMPERE RATINGS:
25SU5 consumption: 35va
Maximum simultaneous connected load: 1965va (See chart at right and text on pages 3 and 4 for additional rating information.)

MAXIMUM OPERATING TEMPERATURE:
Scanner Type 45UV1 . . . . . 212°F
Control Type 25SU5 . . . . . ambient, . . . 125°F

SHIPPING WEIGHT: 21 lbs.

**TERMINAL RATINGS (MAX.) FOR TYPE 25SU5 MODEL 1100**

| Terminal No. | Ratings at 120 v 60 cy |
|---|---|
| 6 | 125 va Pilot Duty |
| 7 | Amperes at 120 volts ac:<br>Full Load – 9.8<br>Locked Rotor – 58.8<br>Alternate: 250 va Pilot Duty |
| 9 | 50 va Pilot Duty |

For alternate ratings to accommodate motorized valves or combinations of solenoid and motorized valves, consult the factory.

**Standard Surface Enclosure**

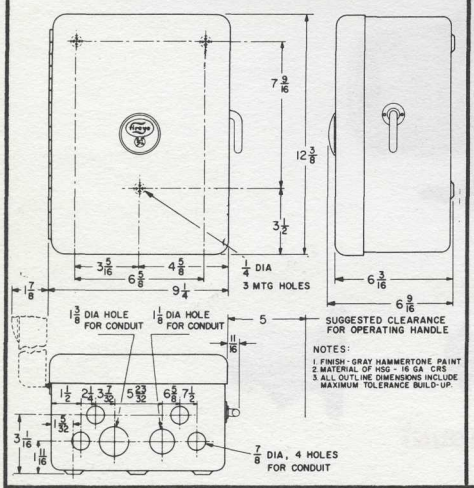


**Flush Mounted Enclosure**
**To Specify, Add Suffix "B" to Model Number**

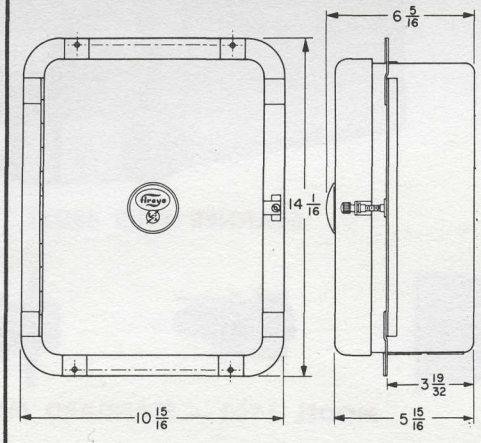


**Frame for Cabinet Mounting**
**To Specify, Add Suffix "A"**
**to Model Number**

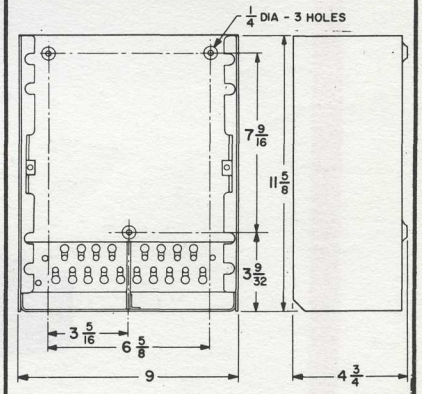


**SCANNER TYPE 45UV1**

**Model 1102**

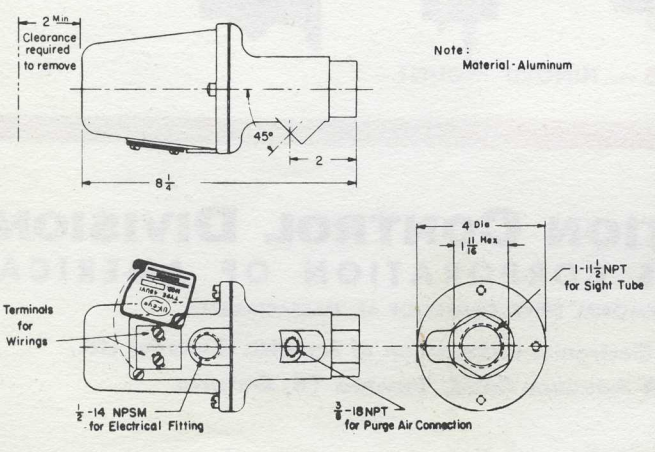


**Model 1105**

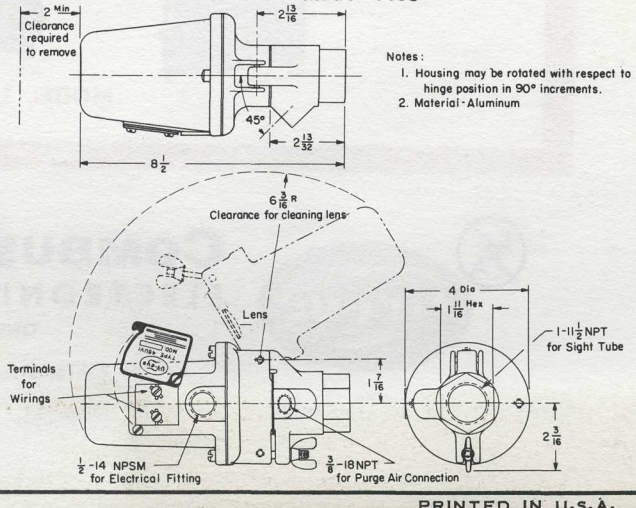




PRINTED IN U.S.A.

BULLETIN NO. MG-571

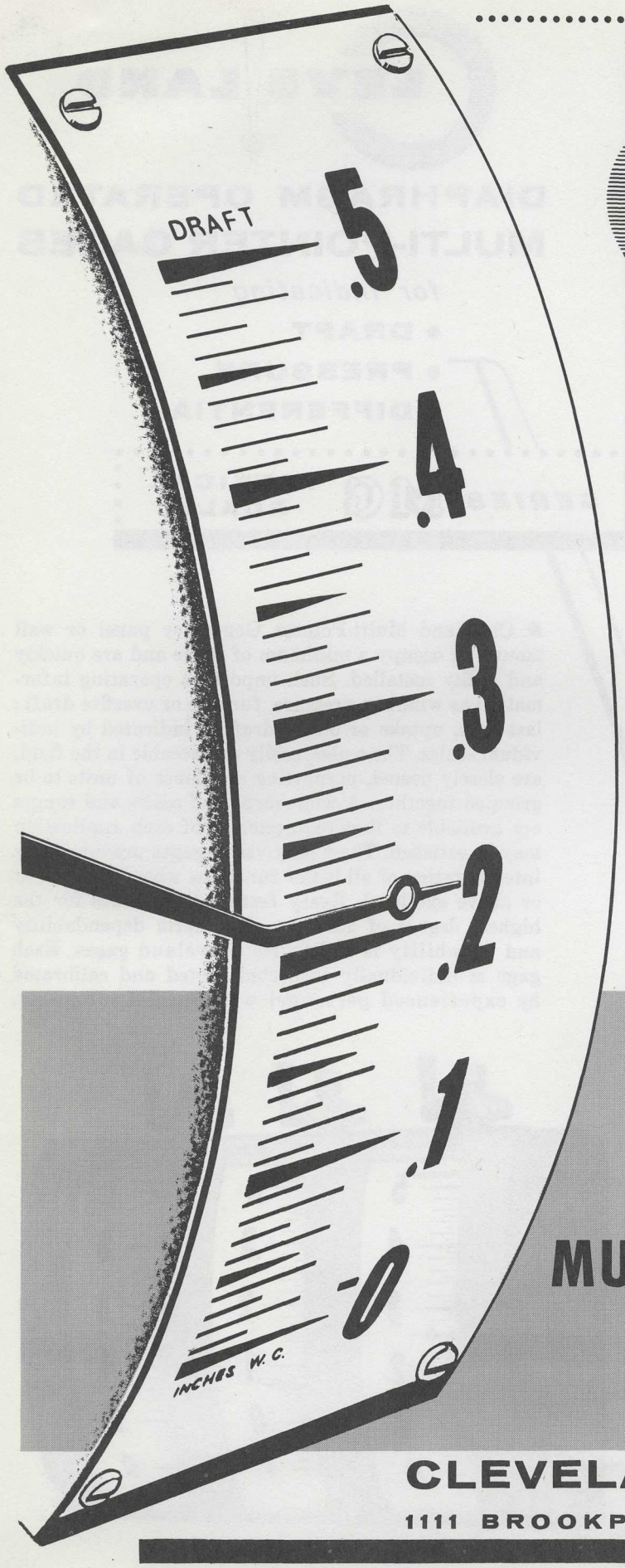


CLEVELAND

ACCURATE

RELIABLE

DURABLE

COMPACT

SERIES MG

VERTICAL SCALE

DIAPHRAGM OPERATED

# MULTI-POINTER GAGES

FOR INDICATING
DRAFT, PRESSURE AND DIFFERENTIAL

CLEVELAND CONTROLS, INC.
1111 BROOKPARK RD. • CLEVELAND 9, OHIO

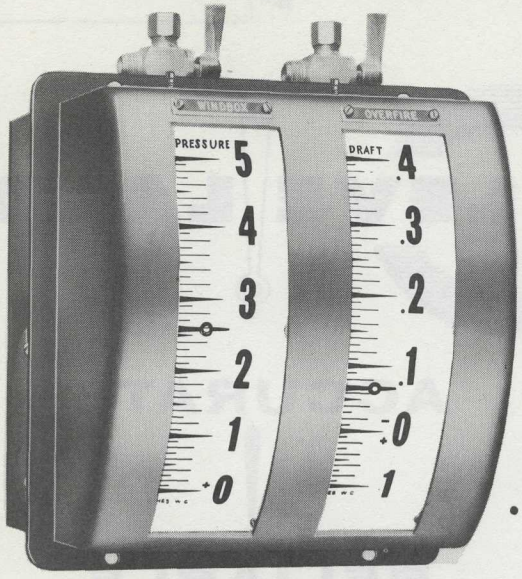


MODEL MG-2

# CLEVELAND

## DIAPHRAGM OPERATED MULTI-POINTER GAGES

*for indicating*

- DRAFT
- PRESSURE
- DIFFERENTIAL

**SERIES MG VERTICAL SCALE**

■ Cleveland Multi-Pointer Gages for panel or wall mounting occupy a minimum of space and are quickly and easily installed. Such important operating information as windbox pressure, furnace or overfire draft; last pass, uptake or outlet draft is indicated by individual scales. The scales, easily replaceable in the field, are closely nested, permitting a number of units to be grouped together. A wide variety of scales and ranges are available so that requirements of each application may be satisfied. These easy-vision gages provide quick interpretation of all boiler functions when mounted at or above eye level. Every feature that makes for the highest degree of accuracy, long term dependability and durability is built into Cleveland gages. Each gage is individually inspected, tested and calibrated by experienced personnel with special equipment.

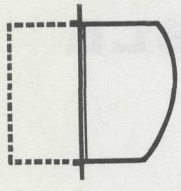

### SEMI-FLUSH MOUNTING

These are the most popular models because they can be mounted above eye level, thereby providing convenient panel space for other instruments requiring close supervision.

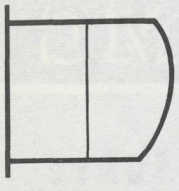

### PROJECTED MOUNTING

The back flange plate provided with 4 mounting holes makes for easy installation. This model is generally used for wall or surface mounting.

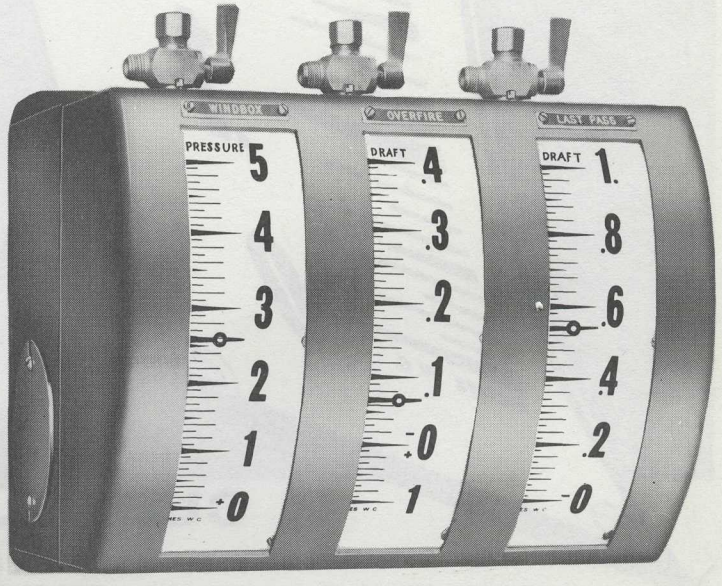


MODEL MG-3

COAST TOOLS LIMITED
"Tooling for Industry"
VANCOUVER, B.C.

CLEVELAND CONTROLS, INCORPORATED
1111 BROOKPARK RD., CLEVELAND 9, OHIO

Honeywell

First in Control

# Type 01
# AIR-O-MOTOR ACTUATORS
# Lever and Thrust Models

Lever Model

01 Air-O-Motor actuators are power devices which operate on a small air signal from a controller and convert this signal into mechanical motion or force.

The forces produced by the 01 Air-O-Motor actuator may be used to operate many kinds of final control elements such as rotary shaft valves, dampers, louvers, and butterfly valves.

Either direct (Fig. 1-1) or reverse action (Fig. 1-2) is possible on the lever model simply by reversing the lever. On the thrust model two different actuators are used to produce direct or reverse action.

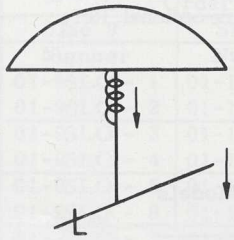

Fig. 1-1

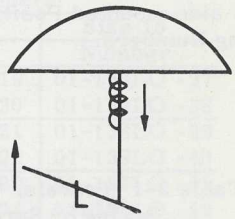

Fig. 1-2

Thrust Model

## SPECIFICATIONS

MODELS - Thrust or lever. Thrust and lever models can use either a spring or springless actuator. Thrust models provide more force, but less travel. Lever models provide more travel, but less force. Refer to Tables 2-3, 2-4, 2-5.

ACTION - Lever Model: direct or reverse action with a direct acting spring or springless actuator. Reverse actuators are not normally used on lever models because of the reversible lever. Thrust Model: direct or reverse action. For direct action specify a direct acting spring or springless actuator. For reverse action specify a reverse acting spring or springless actuator.

CONSTRUCTION - Both models have steel diaphragm cases, cast iron spring barrels and cast iron yokes. 01 Air-O-Motor actuator diaphragms are Neoprene with a fabric insert. Ambient temperature ranges for Neoprene diaphragms is -20°F to 160°F. Other diaphragm materials available for higher or lower temperatures. Direct acting Air-O-Motor actuator stem is zinc plated steel. Reverse acting Air-O-Motor actuator stem is stainless steel. The connector clevis is cadmium plated steel. All mounting brackets are cast iron. Lever is steel with eight 3/8" dia. holes. Needle bearings are used at critical pivot holes in the lever.

MOUNTING - Both models, lever and thrust, are constructed for base mounting. For wall or vertical mounting a cast iron right-angle wall bracket is furnished. This bracket is attached directly to the base plate. See Fig. 4-2 and Table 4-1 for bracket size and number of holes.

TRAVELS - Travels vary with model and size of Air-O-Motor actuators. Refer to Tables 2-1 and 2-2.

SPRING RANGES - Standard ranges are 3 to 15 psig or 6-30 psig. Refer to Tables 2-4 and 2-5.

AIR SUPPLY - Maximum air pressure to all 01 Air-O-Motor actuator diaphragms is 50 psig. All air connections are 1/4 inch N. P. T.

POSITIONERS - Springless actuators are furnished with a side-mounted Positioner, regulator and gage for air-loading constant pressure side. With spring actuators, side mounted Positioners are optional. Refer to Ordering Numbers.

Table 2-1 Travels, Thrust Models
Spring or Springless

| Action | Direct or Reverse | | |
|---|---|---|---|
| Actuator Size | 01-9 | 01-11 | 01-13 |
| Travel, Inches | 3/4 | 1-1/8 | 1-1/2 |

Table 2-2 Travels, Lever Models
Spring or Springless, Direct or Reverse Action

| Actuator Size | | 01-9 | 01-11 | 01-13 |
|---|---|---|---|---|
| Air-O-Motor Model | Lever Hole | Travel, Inches | | |
| Lever | A | 1.62 | 2.42 | 3.24 |
| | B | 2.16 | 3.22 | 4.32 |
| | C | 2.69 | 4.03 | 5.40 |
| | D | 3.23 | 4.83 | 6.48 |
| | E | 3.77 | 5.65 | 7.57 |
| | F | 4.32 | 6.45 | 8.63 |
| | G | 4.86 | 7.26 | 9.72 |
| | H | 5.39 | 8.07 | 10.80 |

Table 2-3

**Forces* Springless Air-O-Motor Actuators**

| Actuator Size | | 01-9 | 01-11 | 01-13 |
|---|---|---|---|---|
| Actuator Model | Lever Hole | Force, lbs | | |
| Thrust | - | 675 | 1050 | 1500 |
| Lever | A | 310 | 485 | 695 |
| | B | 235 | 365 | 520 |
| | C | 185 | 290 | 415 |
| | D | 155 | 240 | 345 |
| | E | 135 | 210 | 295 |
| | F | 115 | 180 | 260 |
| | G | 105 | 160 | 230 |
| | H | 95 | 145 | 205 |

*** The thrusts are based upon a supply pressure of 18 psig and a constant loading pressure of 3 psig, which results in a differential or overpressure of 15 psig. To determine available thrusts when the differential is other than 15 psig, divide the listed values by 15 and then multiply by the actual differential or overpressure.**

Table 2-4 Force (lbs) for Lever Model (Direct or Reverse)

| | FULL TRAVEL | | | | | | | | | | | | | | | ZERO TRAVEL | | | | | |
|---|---|---|---|---|---|---|---|---|---|---|---|---|---|---|---|---|---|---|---|---|---|
| Actuator Size | 01-9 | | | | | 01-11 | | | | | 01-13 | | | | | 01-9 | | 01-11 | | 01-13 | |
| Spring Range | 3-15 | | | 6-30 | | 3-15 | | | 6-30 | | 3-15 | | | 6-30 | | 3-15 | 6-30 | 3-15 | 6-30 | 3-15 | 6-30 |
| Air Pressure | 18 | 35 | 50 | 35 | 50 | 18 | 35 | 50 | 35 | 50 | 18 | 35 | 50 | 35 | 50 | - | - | - | - | - | - |
| Lever Hole | Force, lbs | | | | | | | | | | | | | | | Force, lbs. | | | | | |
| A | 60 | 415 | 730 | 105 | 415 | 95 | 650 | 1125 | 160 | 650 | 140 | 925 | 1625 | 230 | 925 | 62 | 125 | 97 | 194 | 140 | 280 |
| B | 47 | 310 | 545 | 80 | 310 | 70 | 485 | 850 | 120 | 485 | 105 | 695 | 1220 | 175 | 695 | 47 | 94 | 73 | 146 | 105 | 210 |
| C | 37 | 270 | 435 | 60 | 270 | 60 | 390 | 680 | 95 | 390 | 80 | 555 | 950 | 140 | 555 | 37 | 75 | 58 | 116 | 83 | 166 |
| D | 31 | 205 | 360 | 50 | 205 | 48 | 320 | 565 | 80 | 320 | 70 | 460 | 800 | 115 | 460 | 31 | 62 | 48 | 96 | 69 | 138 |
| E | 27 | 175 | 310 | 45 | 175 | 41 | 275 | 485 | 70 | 275 | 60 | 395 | 700 | 100 | 395 | 26 | 52 | 41 | 82 | 60 | 120 |
| F | 23 | 155 | 270 | 40 | 155 | 36 | 240 | 425 | 60 | 240 | 50 | 345 | 600 | 85 | 345 | 24 | 48 | 36 | 72 | 52 | 104 |
| G | 21 | 135 | 240 | 35 | 135 | 32 | 215 | 375 | 55 | 215 | 46 | 305 | 550 | 75 | 305 | 21 | 42 | 32 | 64 | 46 | 92 |
| H | 19 | 125 | 220 | 30 | 125 | 29 | 195 | 340 | 48 | 195 | 41 | 275 | 480 | 70 | 275 | 19 | 38 | 29 | 58 | 42 | 84 |

Table 2-5 Force (lbs) for Thrust Model

| Full Travel | | | | | | | | | | | | | | | |
|---|---|---|---|---|---|---|---|---|---|---|---|---|---|---|---|
| Actuator | 01-9 | | | | | 01-11 | | | | | 01-13 | | | | |
| Spring Range | 3-15 | | | 6-30 | | 3-15 | | | 6-30 | | 3-15 | | | 6-30 | |
| Air Pressure | 18 | 35 | 50 | 35 | 50 | 18 | 35 | 50 | 35 | 50 | 18 | 35 | 50 | 35 | 50 |
| Force, lbs | 135 | 900 | 1575 | 225 | 900 | 210 | 1400 | 2450 | 350 | 1400 | 300 | 2000 | 3500 | 500 | 2000 |

| Zero Travel | | | | | | |
|---|---|---|---|---|---|---|
| Actuator | 01-9 | | 01-11 | | 01-13 | |
| Spring Range | 3-15 | 6-30 | 3-15 | 6-30 | 3-15 | 6-30 |
| Force, lbs | 145 | 290 | 230 | 460 | 335 | 670 |

# ORDERING NUMBERS

The ordering tables below list all 01 Air-O-Motor actuators now available. Order accessories (except Handwheels) separately. Positioners are normally furnished with Springless Air-O-Motor actuators, so please specify if positioner is not needed. When ordering, use the ordering number or word description whichever you prefer. Send orders or inquiries to your local Honeywell office.

## POSITIONERS

(1) Springless Actuators - ordering number includes side-mounted Positioner with regulator and gage.
(2) Spring Actuators - create Positioner ordering number from Table at right. Always prefix Positioner ordering number with HP. Add Positioner number to Air-O-Motor number, i.e. 01-9SLO-1-HP-1111.

| Range | First Digit | Cam* Type | Second Digit | Accessories | Third Digit | Positioner Action | Fourth Digit |
|---|---|---|---|---|---|---|---|
| 3-15 | 1 | 1 | 1 | bypass and gages | 1 | Direct | 1 |
| 3-9 | 2 | 2 | 2 | gages only | 2 | Reverse | 2 |
| 9-15 | 3 | 3 | 3 | no bypass or gages | 3 | | |
| 6-30 | 4 | | | | | | |

*** Cam 1 is factory-installed as a standard. Cams 2 and 3 are included with each positioner shipped. Please specify if factory installation of either Cam 2 or 3 is desired.**

## Lever Models

| Selection | | | | | | | | Ordering Numbers | | |
|---|---|---|---|---|---|---|---|---|---|---|
| Mounting | | Spring Range, psig | | | | Spring- | Manual | Size 9 | Size 11 | Size 13 |
| Base | Wall | 3-15 | 3-9 | 9-15 | 6-30 | less | Operator | Number | Number | Number |
| x | | x | | | | | | 01-9SLO - 1 | 01-11SLO -19 | 01-13SLO -37 |
| x | | x | | | | | x | 01-9SLO - 2 | 01-11SLO -20 | 01-13SLO -38 |
| x | | | x | | | | | 01-9SLO - 3 | 01-11SLO -21 | 01-13SLO -39 |
| x | | | x | | | | x | 01-9SLO - 4 | 01-11SLO -22 | 01-13SLO -40 |
| x | | | | x | | | | 01-9SLO - 5 | 01-11SLO -23 | 01-13SLO -41 |
| x | | | | x | | | x | 01-9SLO - 6 | 01-11SLO -24 | 01-13SLO -42 |
| x | | | | | x | | | 01-9SLO - 7 | 01-11SLO -25 | 01-13SLO -43 |
| x | | | | | x | | x | 01-9SLO - 8 | 01-11SLO -26 | 01-13SLO -44 |
| x | | | | | | x | | 01-9PLO -55 | 01-11PLO -57 | 01-13PLO -59 |
| | x | x | | | | | | 01-9SLW -10 | 01-11SLW -28 | 01-13SLW -46 |
| | x | x | | | | | x | 01-9SLW -11 | 01-11SLW -29 | 01-13SLW -47 |
| | x | | x | | | | | 01-9SLW -12 | 01-11SLW -30 | 01-13SLW -48 |
| | x | | x | | | | x | 01-9SLW -13 | 01-11SLW -31 | 01-13SLW -49 |
| | x | | | x | | | | 01-9SLW -14 | 01-11SLW -32 | 01-13SLW -50 |
| | x | | | x | | | x | 01-9SLW -15 | 01-11SLW -33 | 01-13SLW -51 |
| | x | | | | x | | | 01-9SLW -16 | 01-11SLW -34 | 01-13SLW -52 |
| | x | | | | x | | x | 01-9SLW -17 | 01-11SLW -35 | 01-13SLW -53 |
| | x | | | | | x | | 01-9PLW-56 | 01-11PLW-58 | 01-13PLW-60 |

## Thrust Models

| Selection | | | | | | | | | Ordering Numbers | | |
|---|---|---|---|---|---|---|---|---|---|---|---|
| Mounting | | Spring Range, psig | | | | Springless | | Manual | Size 9 | Size 11 | Size 13 |
| Base | Wall | 3-15 | 3-9 | 9-15 | 6-30 | Dir. | Rev. | Operator | Number | Number | Number |
| x | | x | | | | | | | 01-9STO - 1 | 01-11STO -21 | 01-13STO -41 |
| x | | x | | | | | | x | 01-9STO - 2 | 01-11STO -22 | 01-13STO -42 |
| x | | | x | | | | | | 01-9STO - 3 | 01-11STO -23 | 01-13STO -43 |
| x | | | x | | | | | x | 01-9STO - 4 | 01-11STO -24 | 01-13STO -44 |
| x | | | | x | | | | | 01-9STO - 5 | 01-11STO -25 | 01-13STO -45 |
| x | | | | x | | | | x | 01-9STO - 6 | 01-11STO -26 | 01-13STO -46 |
| x | | | | | x | | | | 01-9STO - 7 | 01-11STO -27 | 01-13STO -47 |
| x | | | | | x | | | x | 01-9STO - 8 | 01-11STO -28 | 01-13STO -48 |
| x | | | | | | x | | | 01-9PTO -61 | 01-11PTO -65 | 01-13PTO -69 |
| x | | | | | | | x | | 01-9PTO -62 | 01-11PTO -66 | 01-13PTO -70 |
| | x | x | | | | | | | 01-9STW -11 | 01-11STW -31 | 01-13STW -51 |
| | x | x | | | | | | x | 01-9STW -12 | 01-11STW -32 | 01-13STW -52 |
| | x | | x | | | | | | 01-9STW -13 | 01-11STW -33 | 01-13STW -53 |
| | x | | x | | | | | x | 01-9STW -14 | 01-11STW -34 | 01-13STW -54 |
| | x | | | x | | | | | 01-9STW -15 | 01-11STW -35 | 01-13STW -55 |
| | x | | | x | | | | x | 01-9STW -16 | 01-11STW -36 | 01-13STW -56 |
| | x | | | | x | | | | 01-9STW -17 | 01-11STW -37 | 01-13STW -57 |
| | x | | | | x | | | x | 01-9STW -18 | 01-11STW -38 | 01-13STW -58 |
| | x | | | | | x | | | 01-9PTW-63 | 01-11PTW-67 | 01-13PTW-71 |
| | x | | | | | | x | | 01-9PTW-64 | 01-11PTW-68 | 01-13PTW-72 |

## DIMENSIONS

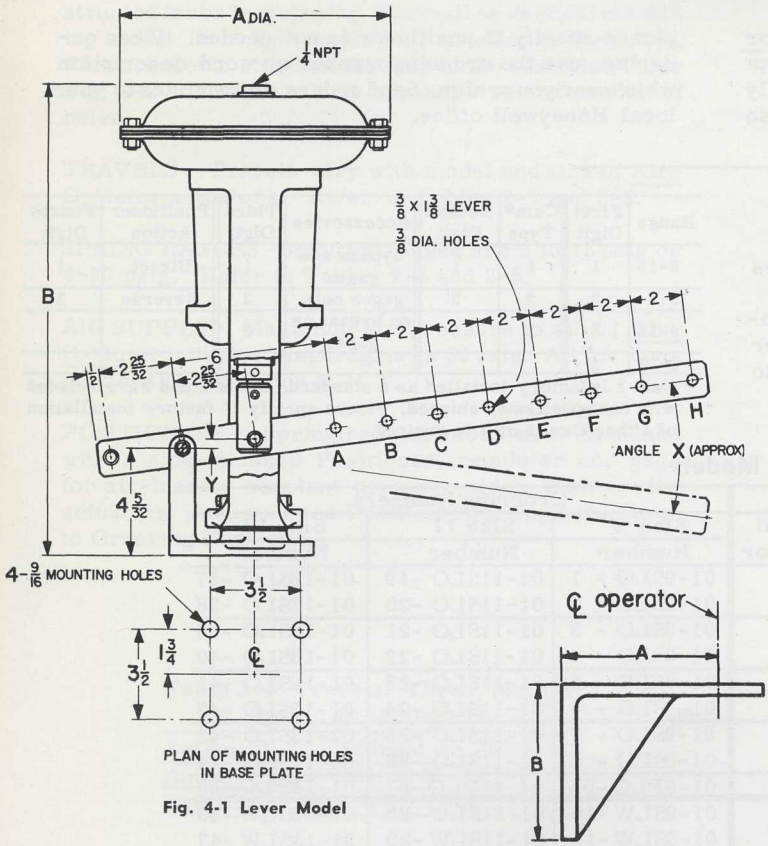


Fig. 4-1 Lever Model

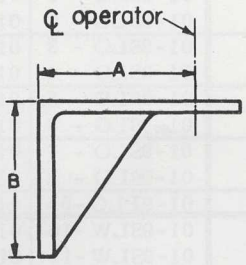


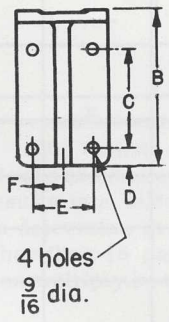


Fig. 4-2
Wall Bracket Dimensions

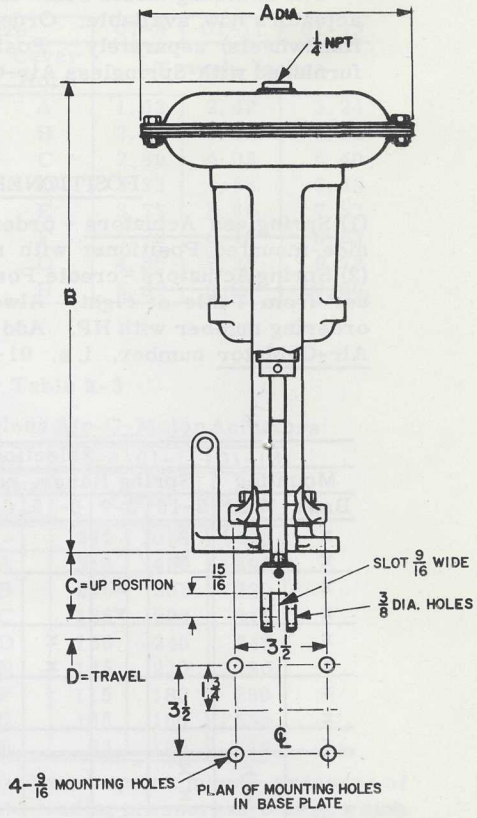


Fig. 4-3 Thrust Model

Table 4-1 Wall Bracket Dimensions

| Actuator Size | Dimensions, inches | | | | | |
|---|---|---|---|---|---|---|
| | A | B | C | D | E | F |
| 9 | 5-1/2 | 7-9/16 | 5 | 9/16 | 3 | 1-1/2 |
| 11 | 7-3/4 | 8-1/16 | 5 | 1 | 3 | 1-1/2 |
| 13 | 7-3/4 | 8-1/16 | 5 | 1 | 3 | 1-1/2 |

Table 4-2 Dimensions, inches, Lever Models

| Actuator Size | A | B | | Angle X | Y |
|---|---|---|---|---|---|
| | | Spring | Springless | | |
| 9 | 10-1/2 | 17-1/8 | 18-3/4 | 15° | 3/8 |
| 11 | 12-3/4 | 18-1/2 | 20-1/8 | 23° | 9/16 |
| 13 | 15 | 21 | 22-3/4 | 31° | 3/4 |

Table 4-3 Dimensions, inches, Thrust Models

| Actuator Size | A | B | | | | C* | D | E |
|---|---|---|---|---|---|---|---|---|
| | | Spring | | Springless | | | | |
| | | Direct | Reverse | Direct | Reverse | | | |
| 9 | 10-1/2 | 17-1/8 | 18-1/4 | 18-3/4 | 18-3/4 | 2-7/16 | 3/4 | 5- 5/8 |
| 11 | 12-3/4 | 18-1/2 | 21-3/8 | 20-1/8 | 20-1/8 | 2-7/16 | 1-1/8 | 5-15/16 |
| 13 | 15 | 21 | 23-7/8 | 13-5/8 | 13-5/8 | 2-3/4 | 1-1/2 | 7- 1/4 |

* At beginning of stroke for direct actuators; at end of stroke for reverse actuators.

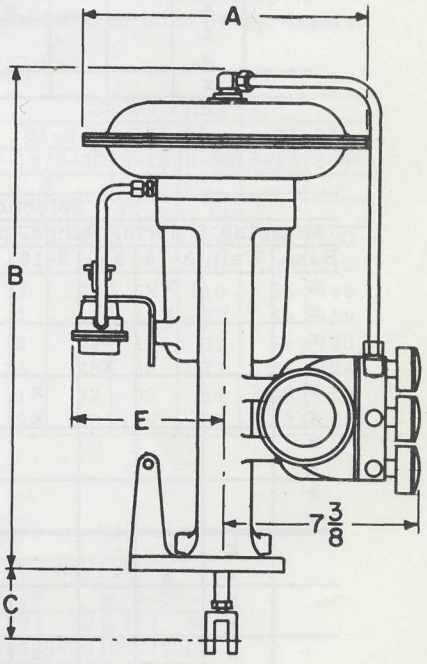


Fig. 4-4 Springless Model

*Specifications and dimensions are subject to change without notice*

COAST TOOLS LIMITED
"Tooling for Industry"
VANCOUVER, B.C.

MINNEAP
Valve Divis
IN CANADA: Ho
HONEYWELL INTERNATIONAL: Sales and Service offices in all principal cities of the world. Manufacturing in United States, United Kingdom, Canada, Netherlands, Germany, France, Japan.

**Honeywell**

S 804-1c—5M—April 1963 PRINTED IN U.S.A.

Eclipse

DESIGNERS AND MANUFACTURERS OF HEAT PROCESS EQUIPMENT

# ECLIPSE FUEL ENGINEERING CO.
## OF CANADA, LIMITED

*PLANT AND GENERAL OFFICES:*
20 UPJOHN ROAD, DON MILLS, ONTARIO Phone HICKORY 4-6614

## QUOTATION

To Canadian Pacific Railway Co. Marine Operations.
Pier B, Vancouver, B. C.
Attn: Mr. H. Tyson, Manager.

QUOTATION NO. V 9942 -G - 79

F.O.B. Our Plant

DATE 15 December, 1967

TERMS
½ of 1% 10 DAYS
NET 30 DAYS

**WE ARE PLEASED TO QUOTE YOU ON THE FOLLOWING:**

| ITEM NO. | NO. OF UNITS | DESCRIPTION OF EQUIPMENT AND/OR SERVICES | PRICE |
|---|---|---|---|
| 1 | | Propulsion Boilers.<br>GENERAL - This proposal covers the supply and installation of ECLIPSE Register Oil fired burners in the four (4) main propulsion boilers of the T.S.S. Princess Marguerite.<br>SPECIFICATIONS Per Boiler:<br>Steam capacity: 35,000 P.P.H. from and at 212 Deg. F.<br>37,500 P.P.H. overload firings<br>Fuel: # 6 Bunker "C" oil<br>Oil Pressure - Nozzle 110 p.s.i.g. at250 deg. F.<br>Steam assist Pressure: 125 p.s.i.g.<br>Feed Water Temperature: to be specified later. Min. 200 deg.F.<br>SCOPE: The scope of this proposal covers the conversion of the four boilers from four burners each to three burners each and includes the necessary front wall refractory modifications.The necessary mechanical work needed to pipe the oil,steam and valves required. The inclusion of ECLIPSE manual hand lighter torches for torching the burners,is done to eliminate the use of oil swabs and the associated mess from the stokehold.<br>WORK AND SERVICES BY OWNERS:<br>The supply of necessary light,heat and water to the work area.<br>The removal of all debris and waste from the work area.<br>The removal and replacement of all pneumatic and or gauge | |

In order to avoid delay, when ordering please specify electrical, gas and air characteristics, when required.

cont'd on page 2

SUBJECT TO STANDARD CONDITIONS OF SALE ATTACHED

SHIPMENT: ..... AFTER RECEIPT OF ORDER

ECLIPSE FUEL ENGINEERING CO.
OF CANADA, LIMITED

# ECLIPSE FUEL ENGINEERING CO. OF CANADA, LIMITED

(herein called the "Company")

Page .....

Quotation No. .....

## Conditions of Sale

1. WARRANTY: The Company warrants equipment manufactured by it to be free from defective material or workmanship when properly installed and operated, its obligation under this warranty being limited to repairing or replacing any part or parts manufactured by it, which shall be returned to the Company within six months from date of shipment with transportation charges prepaid and which the Company's examination shall disclose to its satisfaction to be defective.

In the case of equipment or parts manufactured by others, the Company will give the buyer the benefit of such adjustment as the manufacturer makes with the Company.

This warranty is in lieu of all other conditions, warranties or guarantees express, implied or statutory, and except as herein set out the Company shall not be liable for injury or damage of any nature, direct, indirect, or consequential arising from defect, delay or any other cause. The Company gives no warranty as to the suitability for any purpose of equipment sold by it, except for the purpose, if any, expressly stated herein.

2. SHIPMENT DATES named herein are estimates only which the Company will attempt to meet.

3. CLAIM FOR SHORTAGES: Any claim for shortages or missing items of equipment must be made to the Company, in writing, within 30 days after receipt of shipment: Company assumes no responsibility for such shortage or missing items unless claim is so made.

4. TAXES: The price payable as shown heron shall be increased by the amount of taxes on, or in respect of, the equipment or the sale thereof for which the Company may be liable, except any such taxes which are expressly included in the price stated herein.

5. APPLICABLE LAW: The contract shall be governed by the laws of Ontario.

6. TITLE: Notwithstanding anything herein contained it is expressly agreed that until payment in full of the price of the equipment, the title to and property in the equipment shall remain in the Company, If the buyer shall make any default in any payment or shall become insolvent or if the equipment or any part thereof shall be seized under any execution or legal process issued against the buyer or under any distress for rent, the whole of the unpaid balance of the price shall immediately become payable and the Company shall have the right at any time without notice to enter the premises where the equipment shall be situate and to retake possession of the equipment. The Company at its option may either retain the equipment as its own, in which case all payments previously made shall remain the property of the Company as liquidated damages and not as a penalty. Or, the Company may resell the equipment in such manner and on such terms as it may deem proper and upon resale when realized and received in cash, less all expenses and commissions in connection with retaking possession, repairs, reconditioning and resale, original buyer's account will be credited and the buyer shall continue to be liable for any deficiency or shall be entitled to receive any surplus.

7. PRICE: Price shown on this quotation is firm, except for taxes, for a period of 90 days from date of quotation.

8. ACCEPTANCE will be consummated upon delivery of Customers Acknowledgement copy of Company's sales order which will denote acceptance of Buyer's purchase order or offer on the terms herein set out and no others. The said terms shall prevail over anything additional to, or inconsistent herewith, which may be set out in the said purchase order or offer.

CONTINUATION OF QUOTATION

Quotation No. V.9942 - G-79

To: Canadian Pacific Railway, Marine Operations.

| ITEM NO. | NO. OF UNITS | DESCRIPTION OF EQUIPMENT AND/OR SERVICES | PRICE |
|---|---|---|---|
| | | Work and services by owners cont'd. | |
| | | lines along with all thermocouple rund. | |
| | | Materials handling of equipment to deck adjacent to stokehold and storage of material prior to company's arrival on job. | |
| | | COMBUSTION EQUIPMENT: | |
| | | Twelve (12) ECLIPSE Steam Assisted Register oil burners complete with all valves, air register, air diffuser, oil gun and gun supports. | |
| 2 | | AUXILIARY BOILER: | |
| | | GENERAL: This proposal covers the conversion to single burner operation with the supply and installation of a single ECLIPSE Steam assisted oil fired register burner. | |
| | | SPECIFICATIONS: | |
| | | Staem Capacity: 9000 P.P.H. from and at 212 Deg. F. | |
| | | Fuel : # 6 Bunker "C" oil. | |
| | | Balance as per propulsion boilers. | |
| | | SCOPE: The scope of this section is to place the auxiliary boiler in operation using a single burner, modifying the boiler front and refractory to suit and to include all necessary valves, fittings and material and services for this conversion. | |
| | | WORK AND SERVICES BY OWNERS: Refer to section 1 - Propulsion Boilers. | |
| | | COMBUSTION EQUIPMENT: one only of above. | |
| | | TESTS AND COMMISSIONING: We propose to carry out startup and preliminary firing tests at dockside, Victoria, on all five boilers. The final tests and acceptance of the auxiliary boiler will be carried out at dockside. The final setting up, capacity tests, efficiency tests and acceptance of the boilers will be done during sea trials. | |
| | | These sea trials will be in two sections. The first consisting of aproximately one day for inital ~~pea~~ service tests and the second will be carried out on the run and will consist of the final tests for acceptance of the ships boiler conversion and as the | |

## CONTINUATION OF QUOTATION

Quotation No. V 9942 - G79

To: Canadian Pacific Railway - Marine Operations.

| ITEM NO. | NO. OF UNITS | DESCRIPTION OF EQUIPMENT AND/OR SERVICES | PRICE |
|---|---|---|---|

Testing and commissioning cont'd:

training period for the Engineering staff of the vessel. This period is limited to a continous period not to exceed four calander days.

TERMS:
25% with order.
30% on delivery of material to shipside.
35% on completion of installation.
10% on completion of sea trials.

PRICE:---------- $ 61,188.00

| | | |
|---|---|---|
| Less labour allowed for removal of old refractory material from fron walls of boilers | $ 425.00 | |
| Less labour allowed for the removal of existing oil burners | 150.00 | |
| Less labour allowed for the removal of oil piping at boiler fronts. | 75.00 | |
| Less labour allowed for disposal of waste material and depris | 100.00 | |
| Less allowance for rental of air compressor for refractory work. | 110.00 | |
| TOTAL DEDUCTION ---------- | | 860.00 |
| Net Contract---------- | | $ 60.328.00 |

OPTIONS:

ADD for providing new gauges for the following reference points: Windbox pressure
Furnace pressure
uptake draft
windbox temperature
enterance to superheater temperature
enterence to economiser temperature
economiser discharge temperature

These gauges are shown in our quotation enclosure. Draft and pressure gauges are "Cleveland". The temperature gauge is a "Thermovolt" indicating pyrometer.

# ECLIPSE FUEL ENGINEERING CO. OF CANADA, LIMITED



## CONTINUATION OF QUOTATION

Quotation No. [illegible]

To: Canadian Pacific Railway Marine Operations.

| ITEM NO. | NO. OF UNITS | DESCRIPTION OF EQUIPMENT AND/OR SERVICES | PRICE |
|---|---|---|---|
| | | OPTIONS CONT'D | |
| | | Five "multi point boiler draft gauges | $ 2000.00 |
| | | Two Pyrometers - indicating only | 320.00 |
| | | Twelve thermocouples | 500.00 |
| | | one lot t/c extention wire | 180.00 |
| | | TOTAL ADDITIONS ---------- | $ 3,000.00 |
| | | ADD For converting the auxiliary boiler from manual to semi-automatic firing. To supply and install the following: | |
| | | 1 only ECLIPSE flame safguard control panel which is C.S.A. approved and houses the following components: purge timer | |
| | | ultra-violet flame relay | |
| | | control relays and low fire interlock | |
| | | Prewired to numbered terminal strip | |
| | | Pilot lights and control switches as required to indicate sequence or alarm. | |
| | | 1 only main oil shut off valve. | |
| | | 1 only low water cutoff. | |
| | | 2 only steam pressure controls. | |
| | | 1 only remote mounted audible alarm. | |
| | | 1 only U/V main flame scanner. | |
| | | 1 only set of rate of fire controls consisting of: | |
| | | forced draft damper | |
| | | forced draft damper control | |
| | | characterized oil flow control valve | |
| | | pneumatic actuators for the oil and air controls | |
| | | pneumatic steam pressure control | |
| | | ALL FIELD WIRING BY OTHERS | ADD $ 3,215.00 |
| | | Add For the supply, supervision of installation and calibration of a manual system of rate of fire control consisting of the following and operating the boilers as follows: | |

# ECLIPSE FUEL ENGINEERING CO. OF CANADA, LIMITED



## CONTINUATION OF QUOTATION

Quotation No. V 9942 - G 79

To: Canadian Pacific Railway - Marine Operations.

| ITEM NO. | NO. OF UNITS | DESCRIPTION OF EQUIPMENT AND/OR SERVICES | PRICE |
|---|---|---|---|

Rate of Fire Control cont'd

The sequence of operation of the proposed rate of fire control is a simple oil/air paralleling to give close oxygen control.

A multi-louvred damper is cut into the forced air fan discharge duct. This damper is actuated by a pneumatic damper actuator complete with a positive positioner. A characterised cam operated oil valve is set into the oil manifold (one per boiler). This valve is of a vernier type and is set to parallel the oil to the air. The control is the same as for the air damper.

These actuactors are positioned in direct ratio to the steam requirements by the stoker by adjusting the control air pressure with an adjustable air regulator.

The supply of the material for this system is included herein, the installation of the air damper, air and oil valve actuactors and interconnecting pneumatic tubing is by owner's staff.

Add ---------- $ 9,200.00

SMOKE INDICATION:

We propose to supply two (2) sets of smoke indicators for the stack. One set for the forward stokehold, the second for the aft stokehold. The stack configuration does not permit individual smoke scanning. This equipment consists of (per set)

electronic relay with visual dial and indicating lights.
photo-diode scanner and light source.

installation of the scanner and light source and inter wiring is by owner's staff.

Add ----------$ 878.00

COMPLETION DATE 16 to 17 weeks after receipt of order.

DELIVERY OF BURNERS 12 to 14 weeks after receipt of order.

INSTRUCTION BOOKS: three copies furnished

Submitted by:

W. Lin. Beattie.

ECLIPSE FUEL ENGINEERING CO. OF CANADA, LIMITED

Canadian Pacific

Vancouver, B. C.
February 2nd, 1968.

T. 68 - 101 PM.

H. J. Tumilty, Esq.
Assistant Superintendent (Engineering)
Victoria, B. C.

Reference your letter of January 30th, enclosing quotation from A.P. Green Fire Brick Co. Ltd., New Westminster, in connection with repairs to boilers, "Princess Marguerite".

Mr. Green phoned me this morning and I advised him that possible we would consider accepting his Proposal No. 1. In line with our subsequent conversation, I have now accepted their Quotation VJ 6008-68. A copy of the Contract Conditions duly signed by myself is attached for your information and record.

N. Tyzuk
Manager
Marine Operations.

attachment.

# CONTRACT CONDITIONS

Agreement Between: Canadian Pacific Steamship Lines

of the City of Victoria in the Province of British Columbia

hereinafter called the "PURCHASER", and A.P. Green Refractories (Canada) Ltd.

~~A.P. Green Fire Brick Co. Limited~~ of the City of New Westminster

in the Province of British Columbia

hereinafter called the "CONTRACTOR"

1. **Proposal:** The detailed proposal and specifications attached hereto are to be considered part of this Agreement.
2. **Location:** Where the work covered by this Proposal is to be performed at a location other than that of the Purchaser's plant or place of business, it is agreed that the responsibilities of the Purchaser and of the Contractor will be the same as if the work were performed at the Purchaser's plant or place of business.
3. **Tearing Out:** In tearing out those areas specified to be torn out, it is sometimes impossible to save the sections adjoining the repair. Should this difficulty arise, the Contractor will endeavour to prevent the collapse of such sections. However, should a collapse occur, such additional work and/or materials as required will be charged to the Purchaser at the Contractor's current rates and prices on a cost plus basis unless covered by a supplementary contract.
4. **Excavation:** Where the proposal requires excavation, and any unusual obstruction is encountered (such as old foundations, structural steel work, sewer and water pipes, rocks, boulders, water, quicksand etc.), removal thereof and preparation of the foundation shall be charged by the Contractor to the Purchaser as an extra on a cost plus basis.
5. **Delays and Continuity:** The Purchaser agrees that the Contractor shall not be responsible for any delays or defaults in workmanship under this contract which are the result of strikes, accidents, fires, acts of God, or any other unavoidable delays which are beyond the Contractor's reasonable control. The Contractor's costs are based on doing all of the erection work in accordance with his work schedule with a crew of reasonable size. If delays for which the Contractor is not responsible prevent the work from being accomplished expeditiously, and additional travel or job mobilization costs are incurred, the same shall be paid by the Purchaser.
6. **Overtime:** The field supervision and labour costs included herein are based on working only during hours for which no overtime or premium pay is required in accordance with local Union contracts, unless stipulated under Specifications.
7. **Storage:** The Purchaser agrees to provide or arrange storage of the Contractor's materials, tools and supplies in a location on the jobsite adjacent to the working area and agreeable to the Contractor; under cover and in a manner that will prevent their damage by frost, heat, water and other physical or natural conditions. It is agreed that there will be no charge to the Contractor for such services.
8. **Protection:** The Purchaser agrees to provide protection against theft or damage to the Contractor's materials, tools and supplies while they are on the job site.
9. **Utilities:** The Purchaser agrees to provide all necessary heat, light, power and water required to complete the work, at no charge to the Contractor. Standard outlets for electrical extensions, electrical equipment, water service, shall be provided within Fifty feet of the work. Any wiring required to connect this Contractor's equipment to existing utilities shall be provided by the Purchaser at no cost.
10. **Control:** It is understood that the Contractor is to be given full control over the area to be worked on in accordance with his schedule, and that ample working space outside the vessel or enclosure will be provided for his working area.
11. **Materials:** The Contractor guarantees that all refractory materials used will be as good as, or better than A.S.T.M. specifications; and that all other materials used will be of good standard quality. All materials to be installed in accordance with the manufacturer's standard practices and recommendations.
12. **Maturing:** It is understood that the Purchaser will burn in or mature the installation in strict accordance with the Contractor's instructions. Failure to properly mature the installation will relieve the Contractor from any and all further responsibility.
13. **Workmen's Compensation Insurance:** All workmen in the Contractor's employ will be covered by the Workmen's Compensation Act of the Province in which the work is to be performed. Where there is no such Act, the Contractor's employees will be covered by Employer's insurance arranged by the Contractor.
14. **Insurance:** Public liability and Property Damage insurance in the amount of $1,000,000.00 inclusive, will be carried by the Contractor during the construction or repair period.
15. **Terms:** It is agreed that payment is to be made by the Purchaser in Canadian dollars as follows: 50% on delivery of materials, 30% on completion of work, 20% thirty days after completion of work. It is further agreed that the 50% and 30% payments are to be considered due and payable by the Purchaser without notice from the Contractor and that there are no provisions in this agreement that provide for the withholding of such payments. It is further agreed that any additional charges made by the Contractor through the exercise of any provisions within this agreement will become due and payable thirty days from the date of the Contractor's invoice for such extra charges.
16. **Guarantee:** The Contractor guarantees his work for a period of one (1) year from completion of work against defects in workmanship. The Purchaser shall give prompt notice to the Contractor of any observed defects. The Contractor shall not be liable for back charges incidental to field changes or correction of workmanship performed hereunder unless ample opportunity is given the Contractor to inspect the workmanship claimed to be defective, and then only after the field changes or corrections have been authorized in writing by the Contractor. This guarantee is in lieu of all guarantees, expressed or implied.
17. **Sales Tax:** It is understood, unless otherwise specified, that the contract price does not include sales tax and that same will be extra, if and where applicable.
18. **Escalation:** This agreement is for a firm price based on prices currently in effect. However, should there be any increase or decrease in labour rates, freight rates or material prices between the date of the proposal and the date of the completion of the work, it is agreed that a corresponding revision will be made in the contract amount to give effect to such changes.
19. **Errors in Drawings:** The Contractor will not be responsible for errors and/or changes in blueprints when such prints are furnished by the Purchaser or one of the Purchaser's other contractors.
20. **Acceptance:** Acceptance by the Purchaser and the Contractor shall constitute an agreement that there are no representations, warranties, collateral agreements, conditions express or implied statutory or otherwise with respect to the work to be done on this contract, or affecting the rights of the parties other than as specifically contained herein. This agreement is subject to acceptance by the Purchaser within _____ days of the date of the Contractor's proposal.

PROPOSAL NO. 1.

Acceptance of Quotation No. VJ 6008-68 Proposal No. _____ together with specifications and conditions as detailed herein.

Date February 2nd, 1968. 19____

Purchaser Canadian Pacific Railway (B.C. Coast Steamship Service)

Per _____ Title MANAGER MARINE OPERATIONS

Contractor A. P. GREEN ~~FIRE BRICK CO. LIMITED~~ Refractories (Canada) Ltd.

Date January 26 19 68

Per E.P. Armstrong Title Eng. Dept.

FORM G126

# SECTION IV

# FAN PARTS LIST

1 - Housing
1A - Top Half Housing
1B - Bottom Half Housing
1C - Power Side Half Housing
1D - Inlet Side Half Housing
2 - Backplate & Flange Wheel
2A - Centerplate & Flange Wheel
2B - Open Wheel
2C - Paddle (Blast) Wheel
2D - Flange & Spider Wheel
3 - Inlet Cone or Bell
3A - Variable Inlet Vanes
3B - Butterfly Valve
4 - Inlet Stand
4A - Inlet Side Plate
4B - Flanged Inlet Side Plate
4C - Drive Side Plate
5 - Power Stand
6 - Shaft
6A - Washer
6B - Slotted Nut
6C - Cotter Pin
7 - Pillow Block Bearing
8 - Arr. 2 Pillow Block Bearings
9 - Arr. 2 Tripod Bearing Arm with Bearings
10 - Bearing Base
10A - Inlet Side Bearing Support
10B - Power Side Bearing Support
11 - Arr. 9 Motor Slide Rails
11A - Arr. 10 Motor Slide Rails
11B - Arr. 10 Motor Adjusting Screw
12 - Standard or Raised Access Door
13 - Motor
14 - Combination All-Weather Cover & Belt Guard
15 - V-Belts
15A - Motor Sheave
15B - Fan Sheave
16 - Belt Guard
17 - Arr. 4 Motor Base
17A - Arr. 7 Motor Base
17B - Arr. 8 Motor & Bearing Base
18 - Shaft Seal
19 - Heat Slinger
20 - Outlet Damper
21 - Standard Drain, ½ Tapped Pipe Coupling
21A - Flanged Type Drain
22 - Inlet Screen
23 - Outlet Screen
24 - Outlet Cone or Evase
25 - Coupling
25A - Coupling Guard
26 - Bearing Shield
27 - Unit Vibration Isolators
27A - Rail Type Vibration Isolators
28 - Inlet Collar
28A - Inlet Flange
28B - Outlet Flange
29 - Stuffing Box
29A - Stuffing Box Gland

**TYPES "CB" & "R"**
**SINGLE INLET**

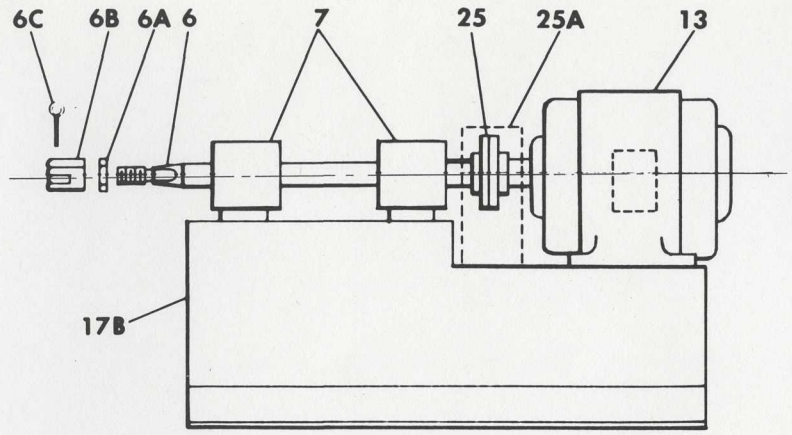


ARR. NO. 8

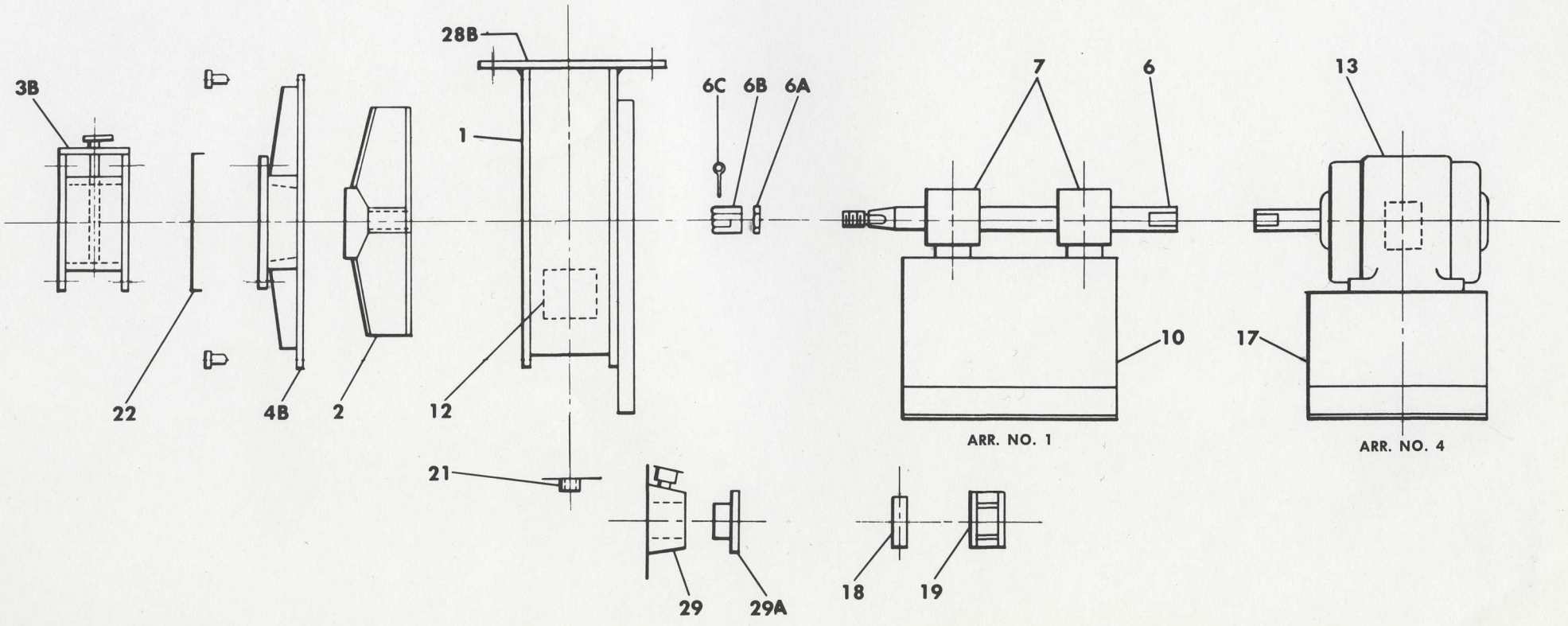


ARR. NO. 1

ARR. NO. 4

**TYPE RE BLOWERS & EXHAUSTERS**
**GAS BOOSTERS & EXHAUSTERS**
**SINGLE INLET**

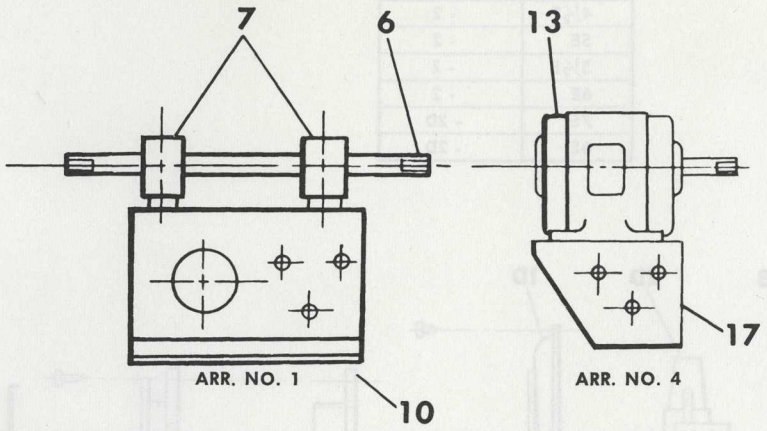





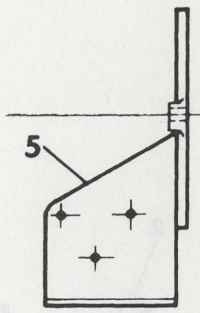


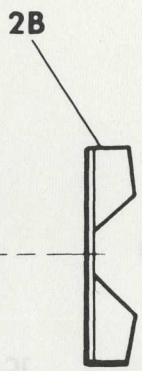

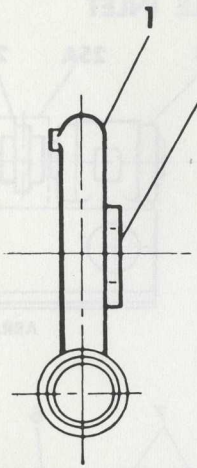


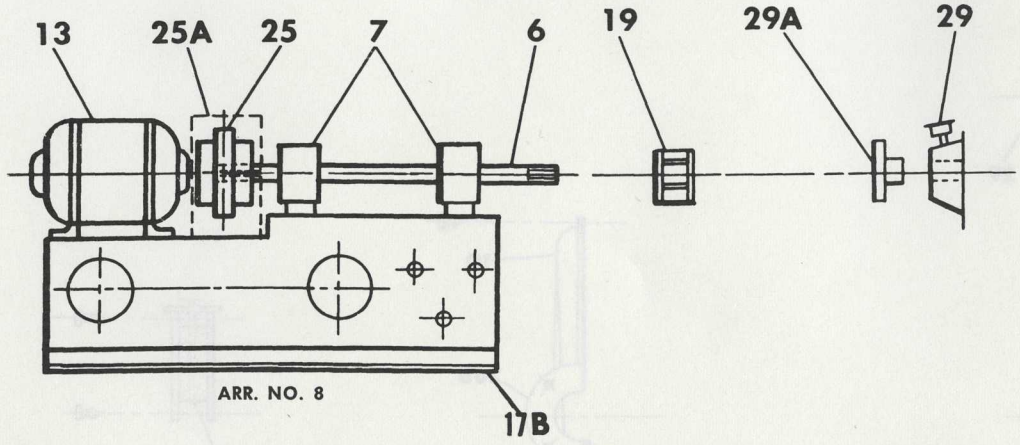


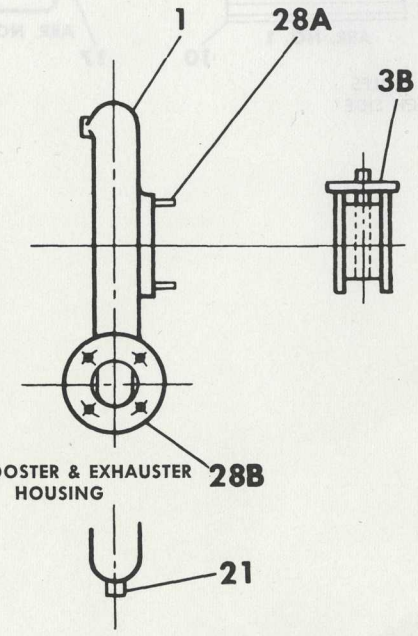

## TYPE E BLOWERS & EXHAUSTERS
## GAS BOOSTERS & EXHAUSTERS
## SINGLE INLET

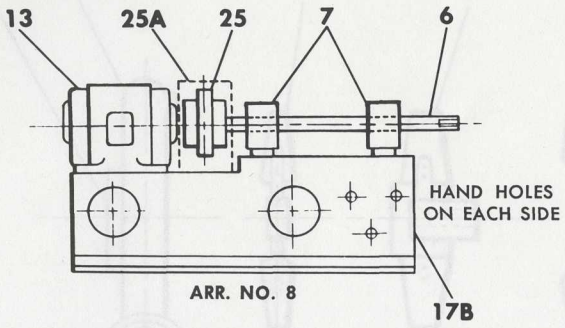


| SIZE | STD WHEEL |
|---|---|
| 4½E | - 2 |
| 5E | - 2 |
| 5½E | - 2 |
| 6E | - 2 |
| 7E | - 2D |
| 8E | - 2D |

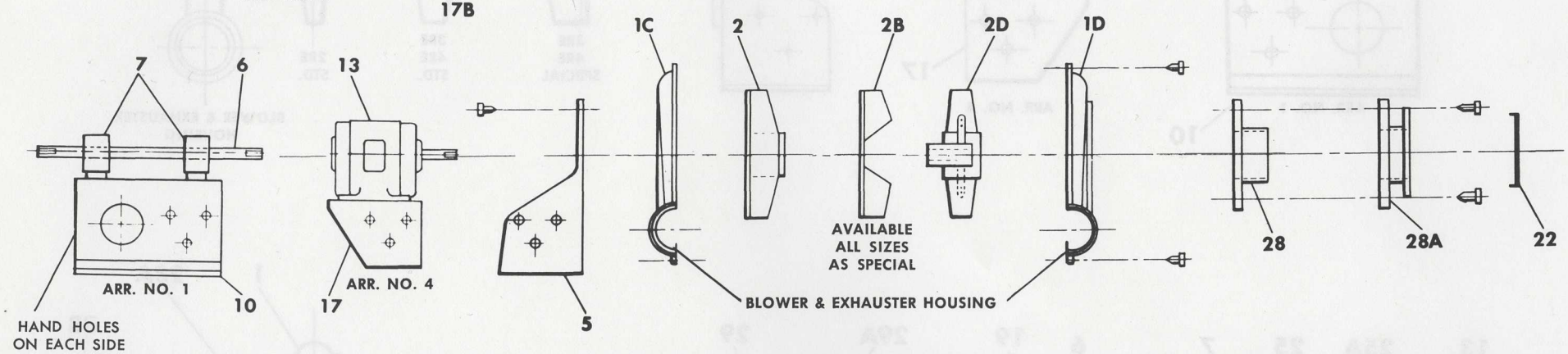


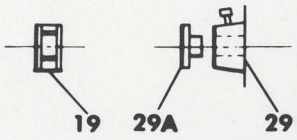


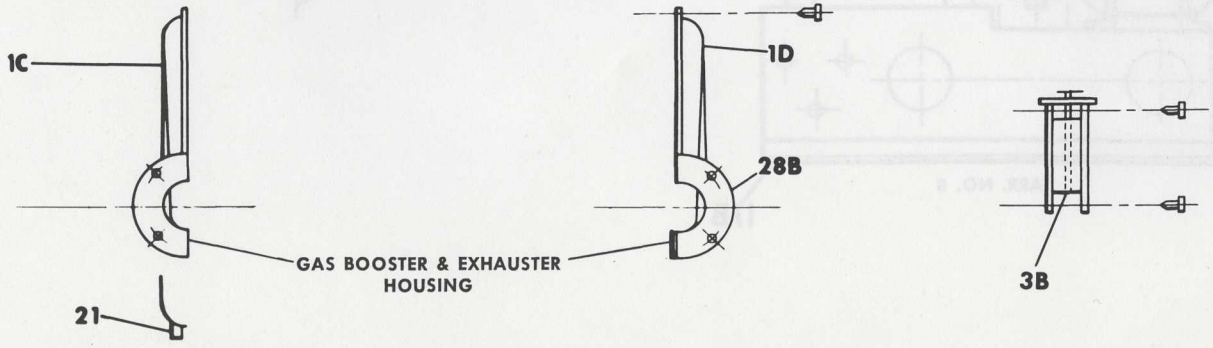

## TYPE "V" VOLUME FANS
## SINGLE INLET

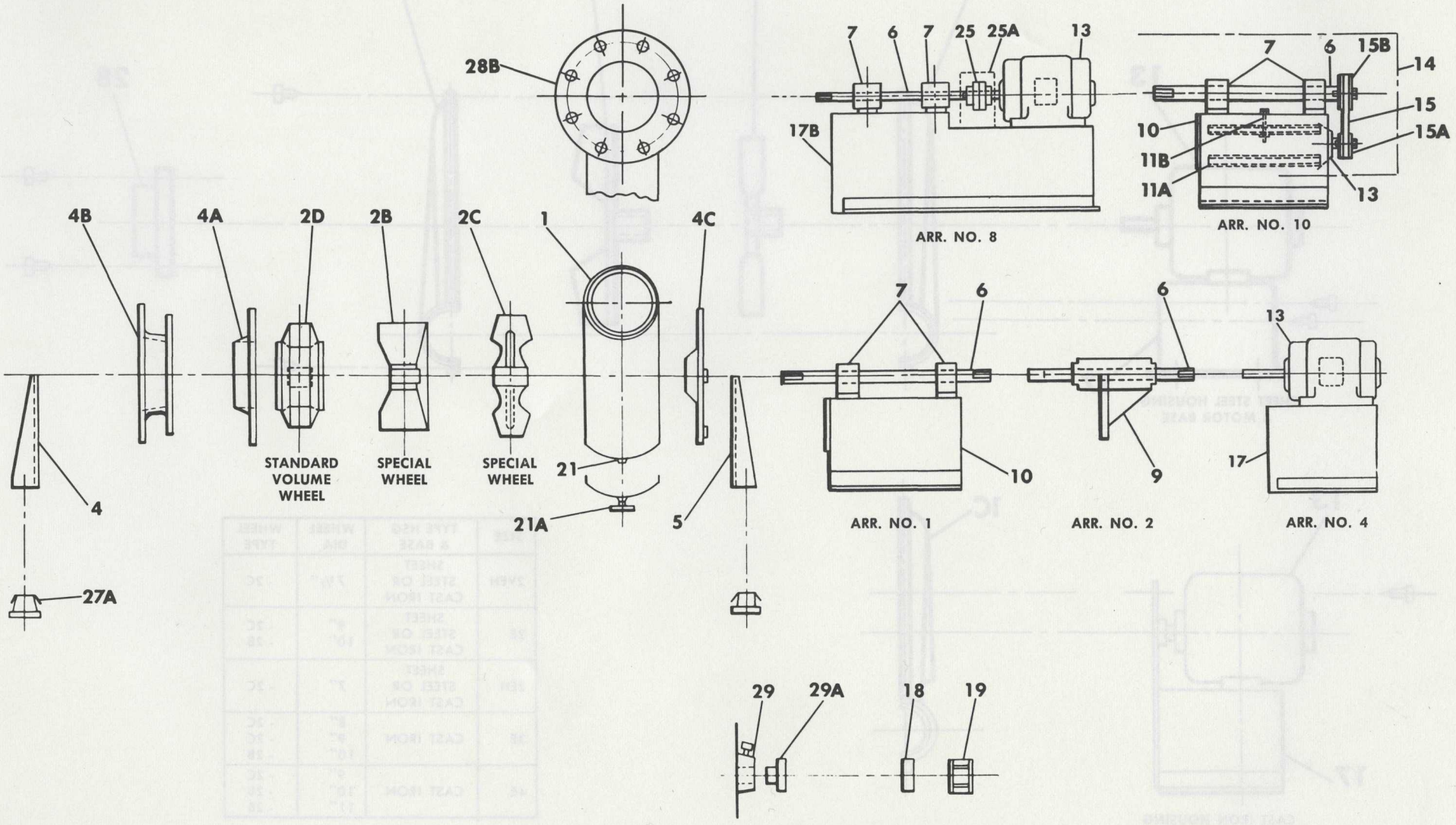

## TYPE "E" BLOWERS & EXHAUSTERS
## SINGLE INLET — ARR. NO. 4

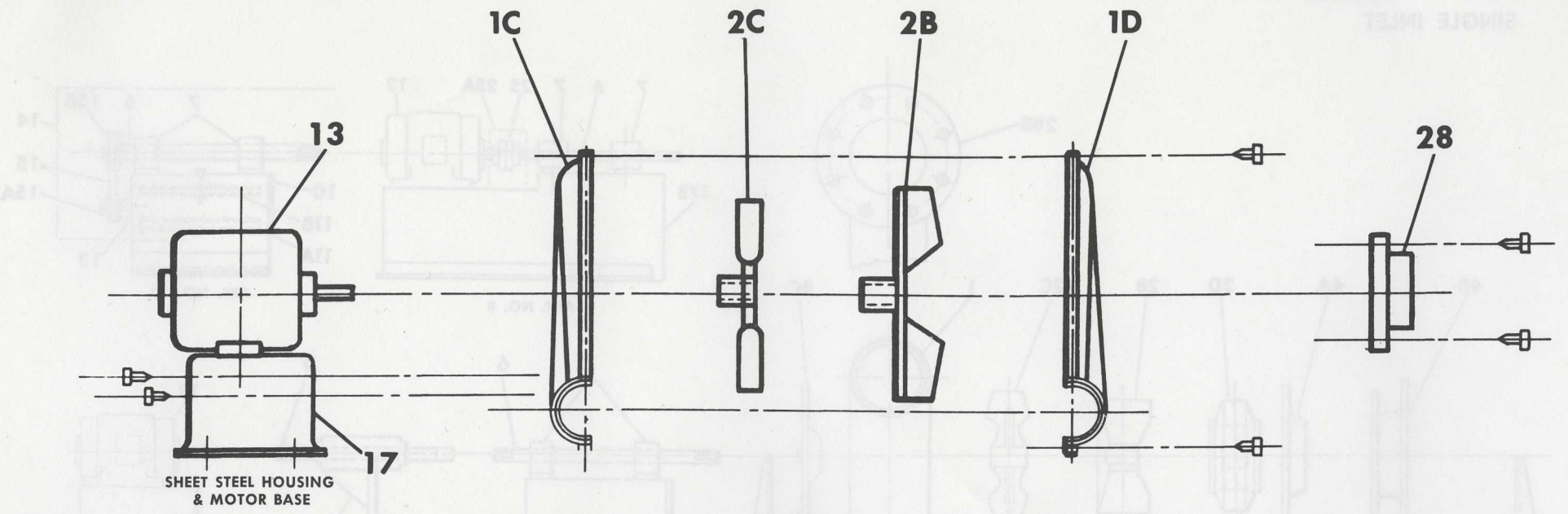


SHEET STEEL HOUSING & MOTOR BASE

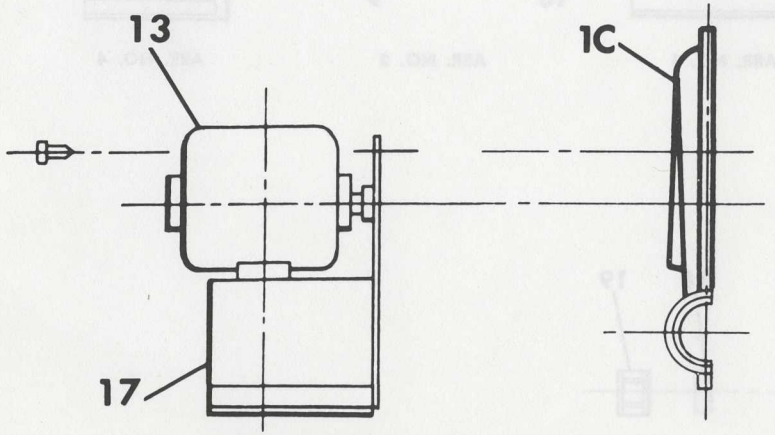


CAST IRON HOUSING WITH SHEET STEEL MOTOR BASE

| SIZE | TYPE HSG & BASE | WHEEL DIA. | WHEEL TYPE |
|---|---|---|---|
| 2VEH | SHEET STEEL OR CAST IRON | 7½" | - 2C |
| 2E | SHEET STEEL OR CAST IRON | 9"<br>10" | - 2C<br>- 2B |
| 2EH | SHEET STEEL OR CAST IRON | 7" | - 2C |
| 3E | CAST IRON | 8"<br>9"<br>10" | - 2C<br>- 2C<br>- 2B |
| 4E | CAST IRON | 9"<br>10"<br>11" | - 2C<br>- 2B<br>- 2B |

**TYPES L39(BLH), L33(CL), L25(DL), & L21(EL)**
**CLASS III & IV**
**DOUBLE INLET**

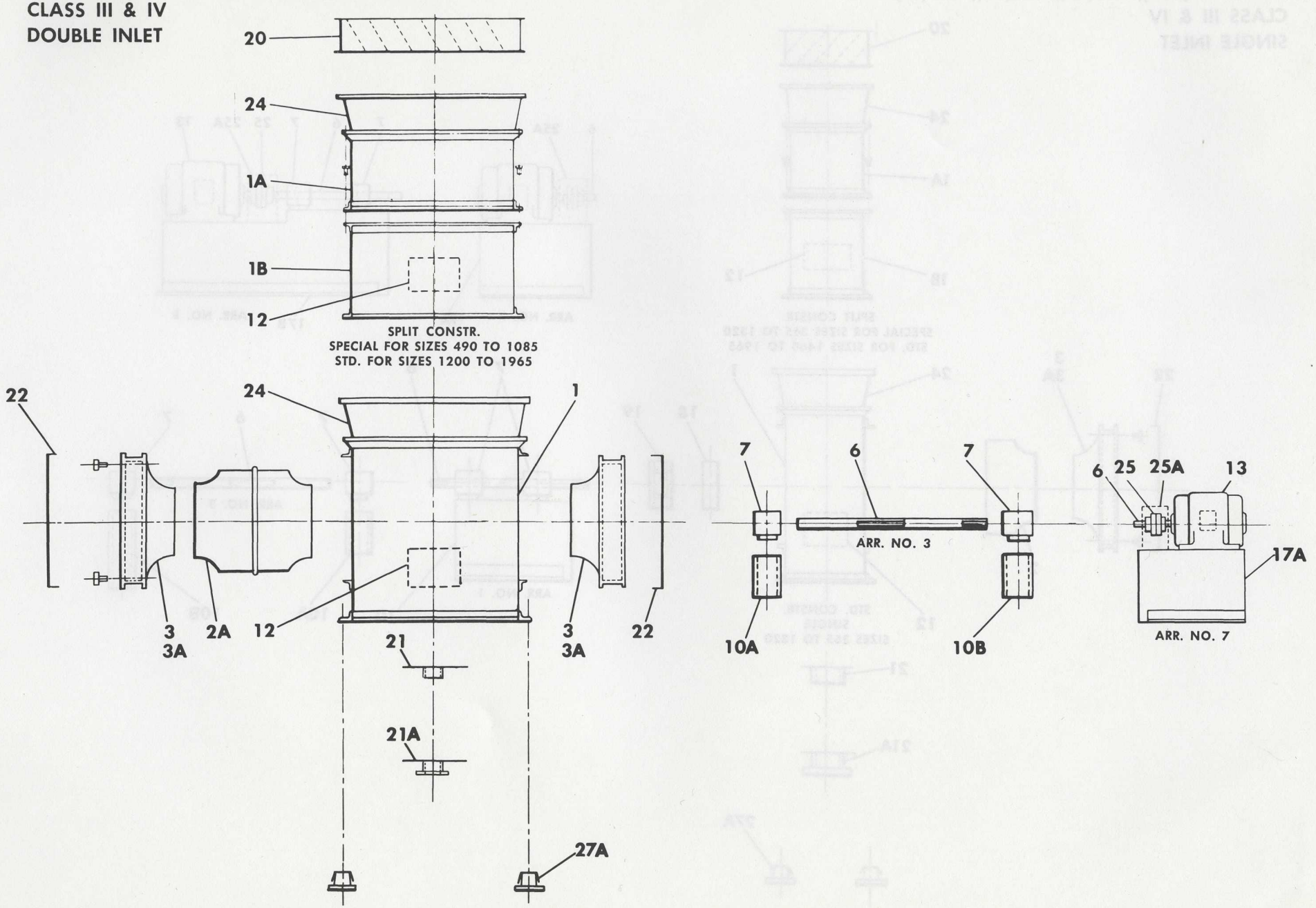

TYPES L39(BLH), L33(CL), L25(DL), L21(EL)
CLASS III & IV
SINGLE INLET

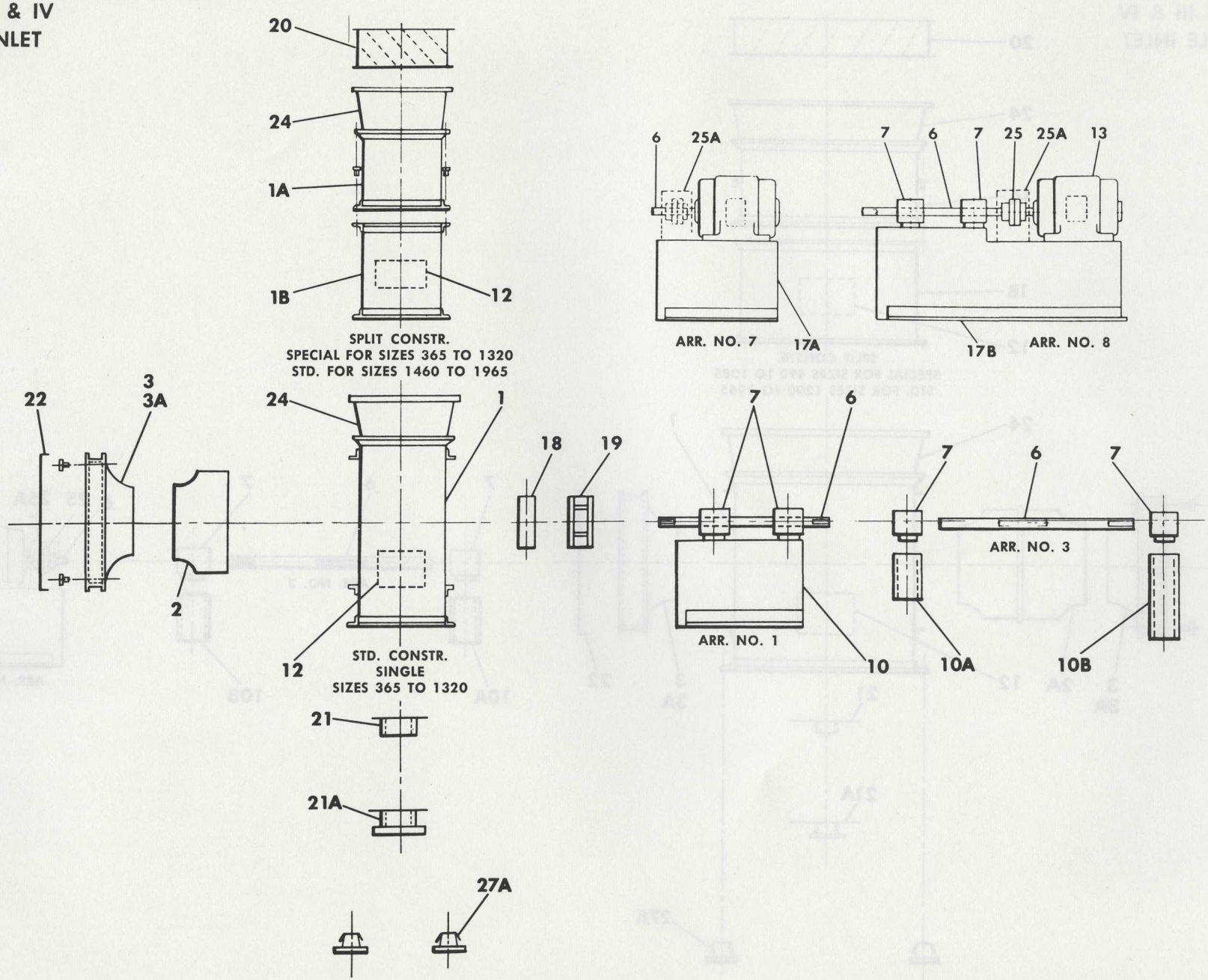

# INDUSTRIAL EXHAUSTERS
# TYPES MW, AW & OW
# SINGLE INLET

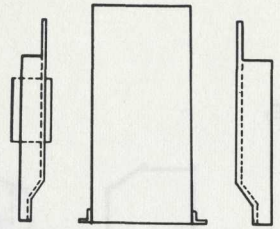

SPECIAL
REMOVABLE SCROLL
CONSTRUCTION

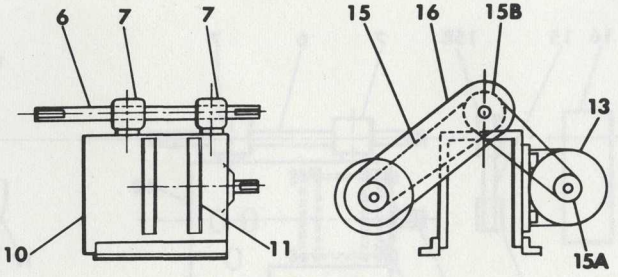


ARR. NO. 9

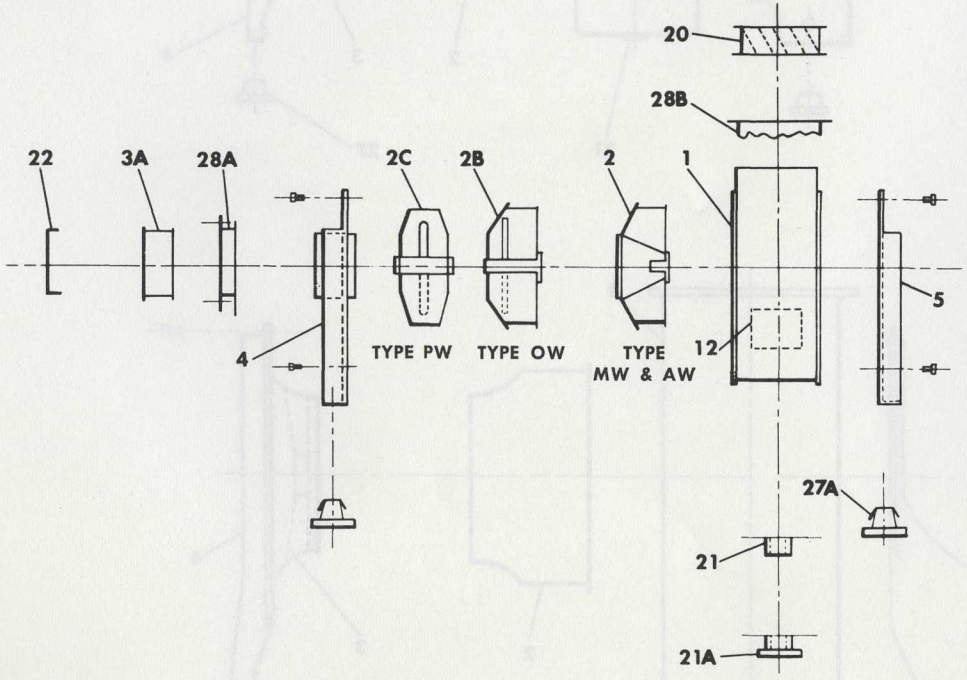


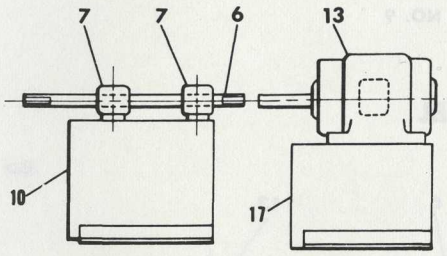


ARR. NO. 1

ARR. NO. 4

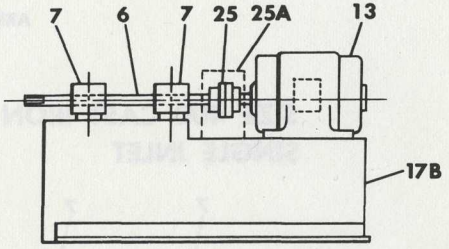


ARR. NO. 8

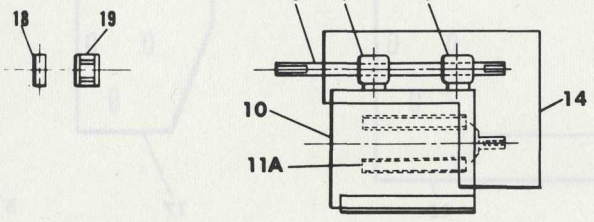


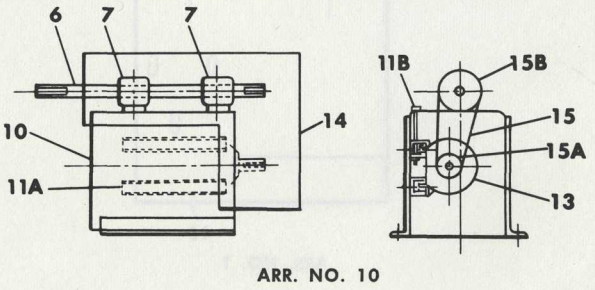


ARR. NO. 10

## SIZE 2½ CAST IRON LL
## SINGLE INLET

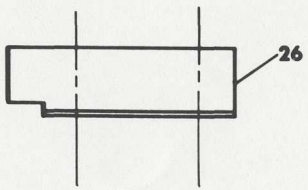


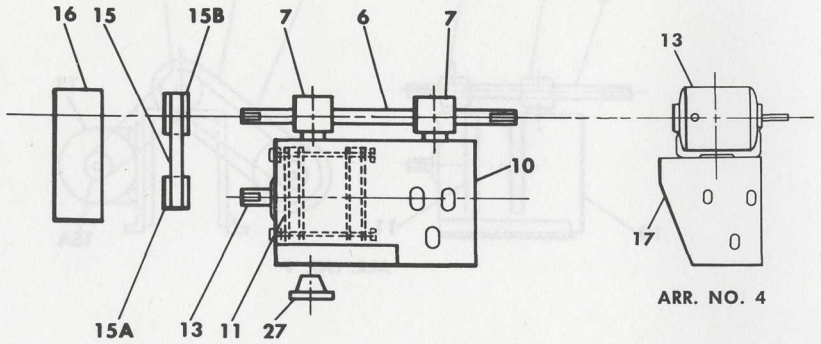


ARR. NO. 1 — LESS 11 & 13

ARR. NO. 9




ARR. NO. 4

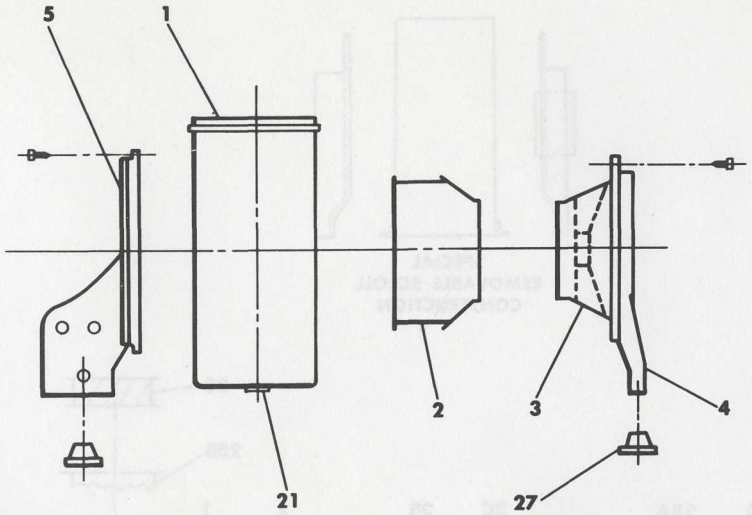


## SIZE 400 CAST IRON BL
## SINGLE INLET

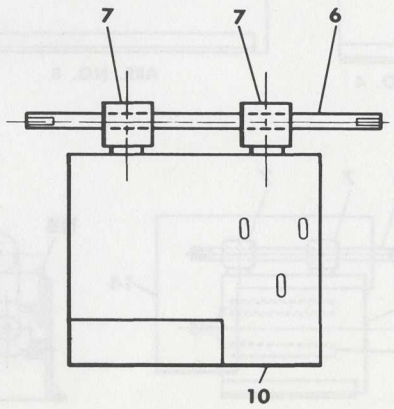


ARR. NO. 1

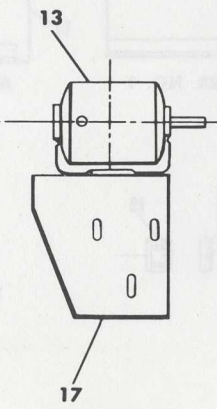


ARR. NO. 4

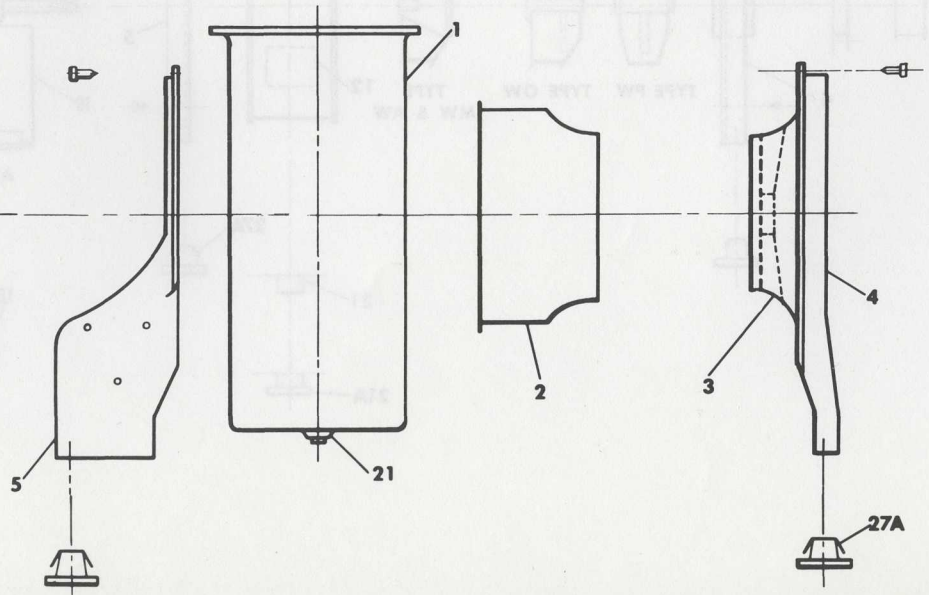

## BABY VENT SET
## SINGLE INLET

ARR. NO. 4

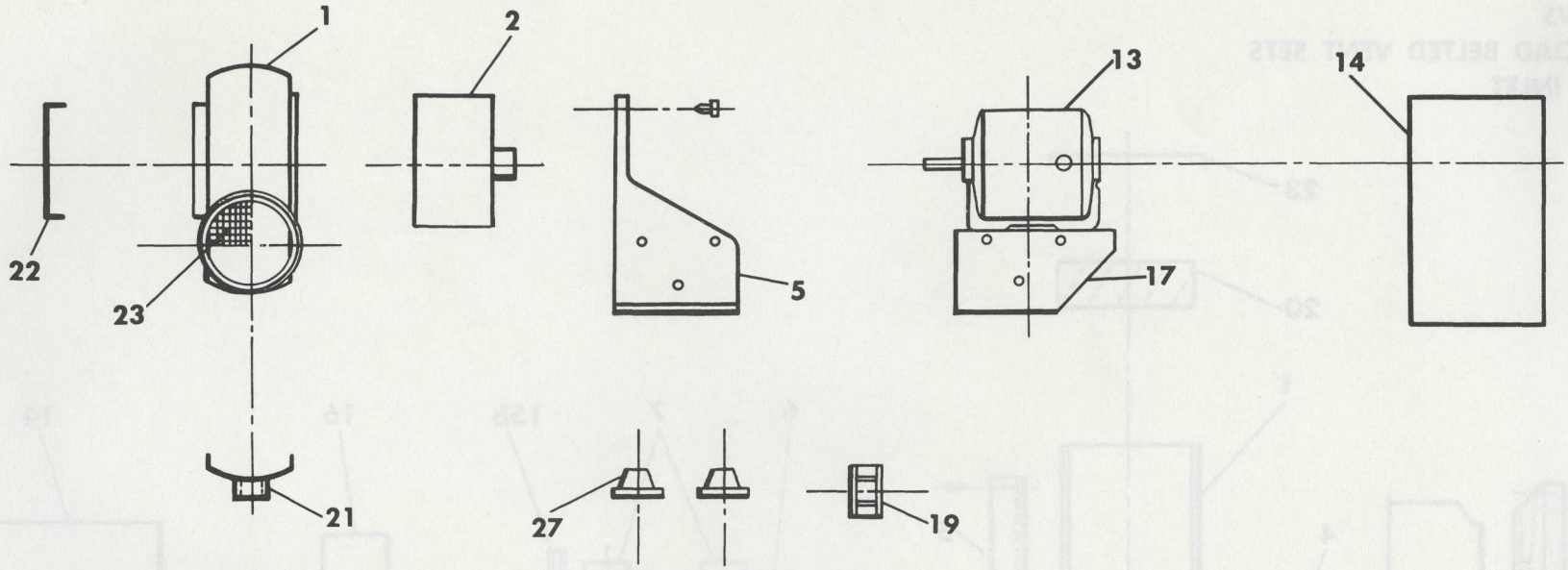


## TYPE HVA
## DOUBLE INLET

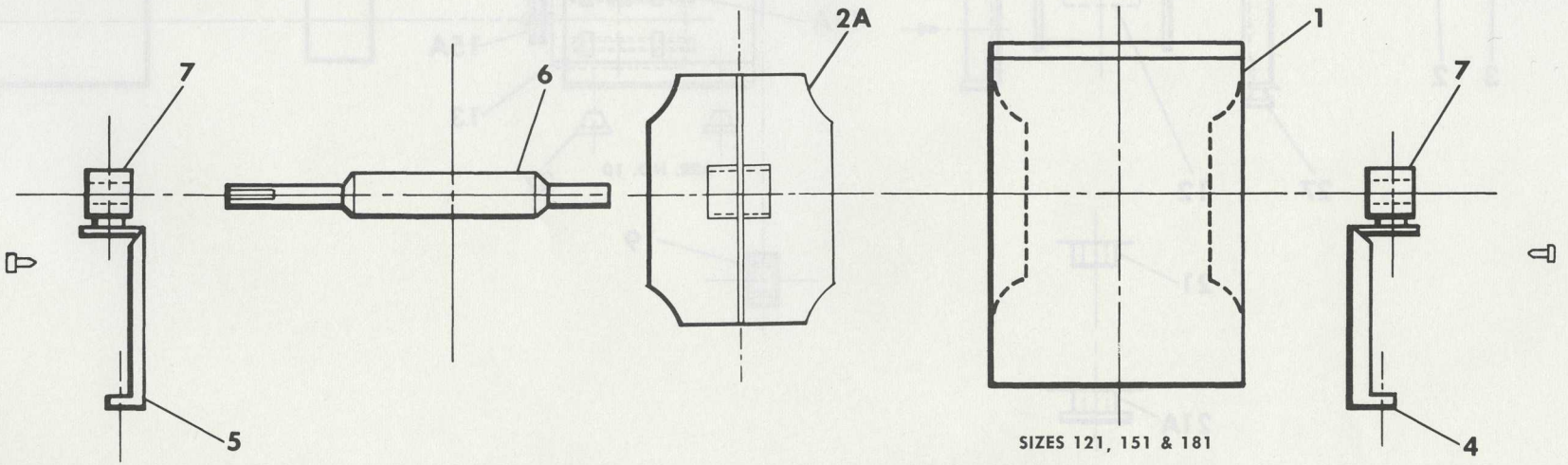


SIZES 121, 151 & 181

SIZES 122, 152 & 182 USES 2 WHEELS & 2 HOUSINGS WITH ONE SHAFT
SIZES 123, 153 & 183 USES 3 WHEELS & 3 HOUSINGS WITH ONE SHAFT

**TYPE BVS**
**LIMIT LOAD BELTED VENT SETS**
**SINGLE INLET**

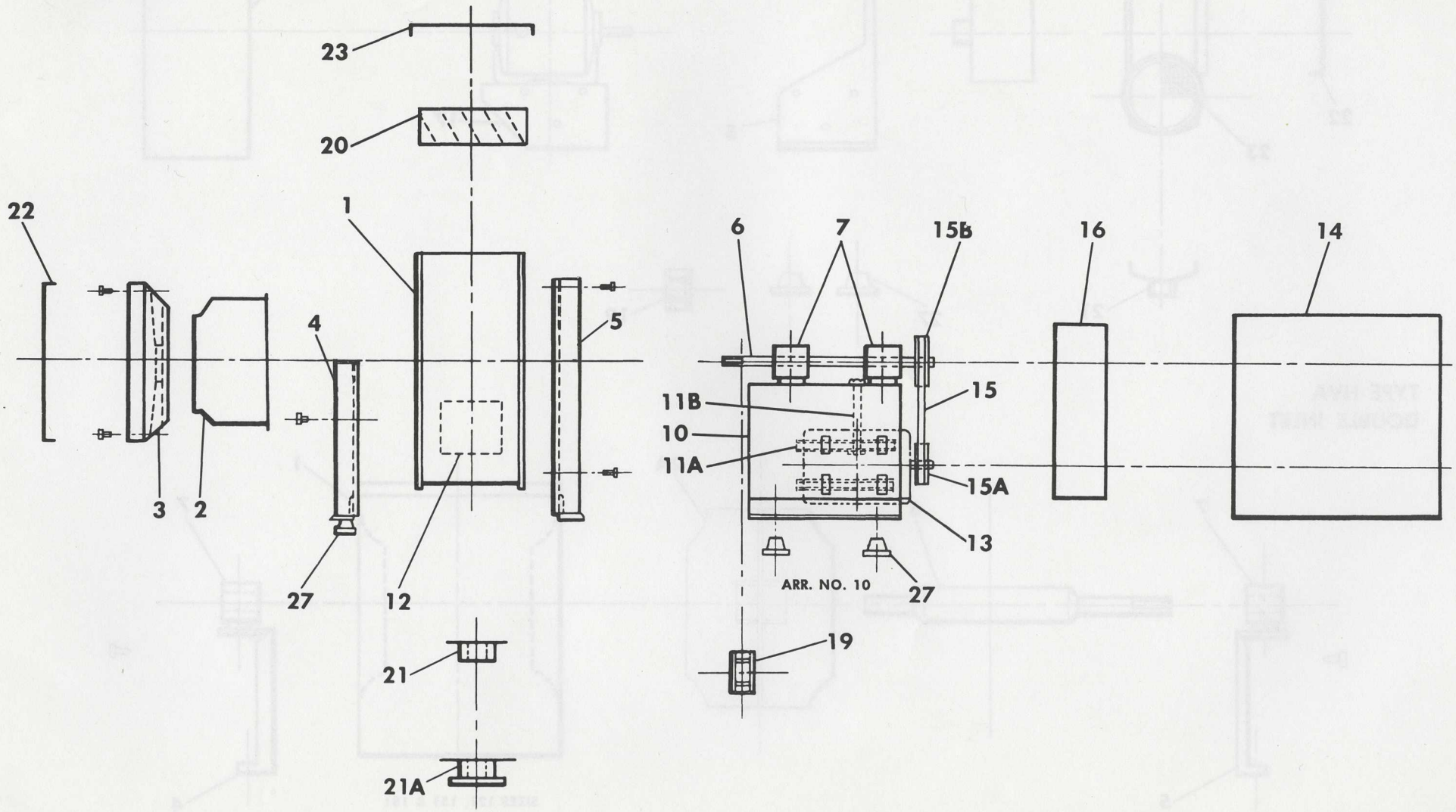

## TYPES BL & BL-AEROFOIL
## CLASS I & II
## DOUBLE INLET

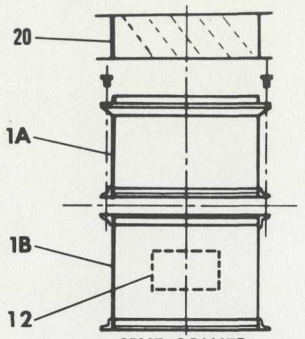


SPLIT CONSTR.
SPECIAL FOR SIZES 805 TO 1200
STD. FOR SIZES 1320 TO 1615*

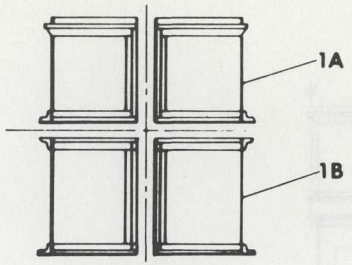


SPLIT CONSTR.
STD. FOR SIZES 1780 TO 2175

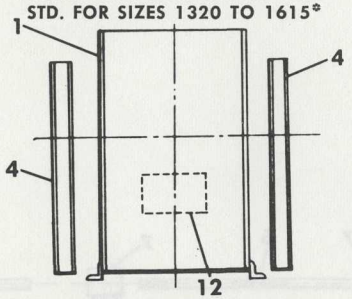


SIZES 600 TO 1200
STD. CONSTR.

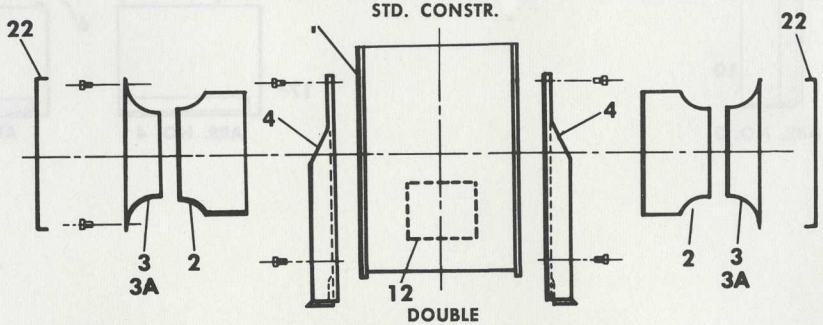


DOUBLE
SIZES 245 TO 540

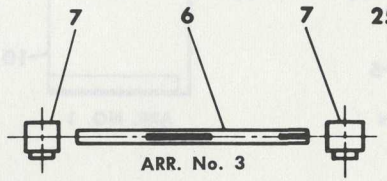


ARR. No. 3

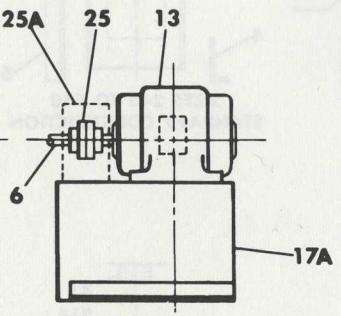


ARR. No. 7

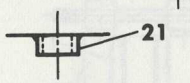


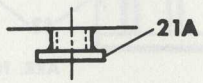


* 1320 and larger has collar on inlet bell

## TYPES BL & BL-AEROFOIL
## CLASS I & II
## SINGLE INLET

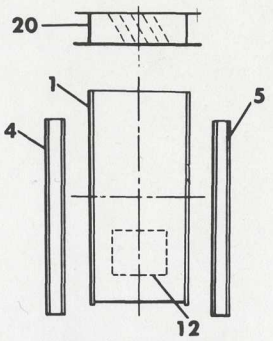


SIZES 600 TO 1200*
STANDARD CONSTRUCTION

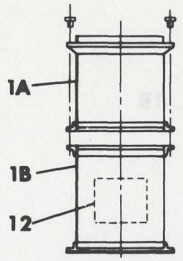


SPLIT CONSTR.
SPECIAL FOR SIZES 805 TO 1200
STANDARD FOR SIZES 1320 TO 2175

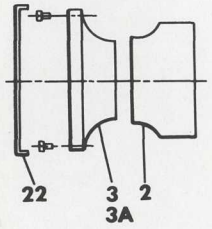


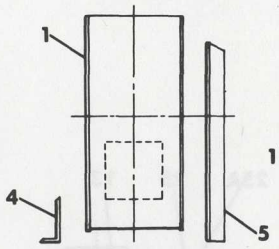


SIZES 245 TO 540
STANDARD CONSTRUCTION

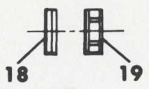


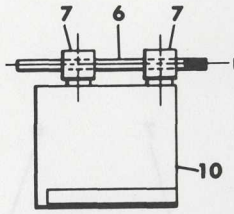


ARR. NO. 1

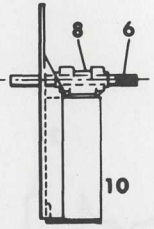


ARR. NO. 2

ARR. NO. 3

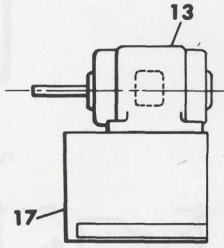


ARR. NO. 4

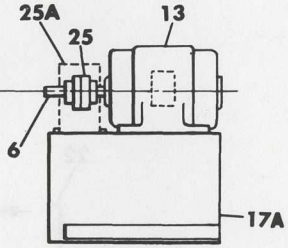


ARR. NO. 7

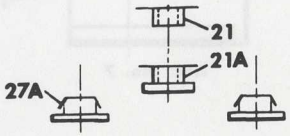


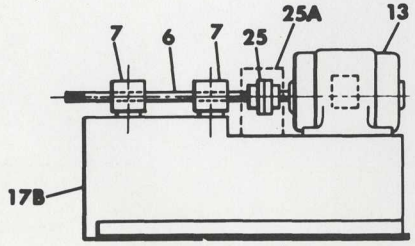


ARR. NO. 8

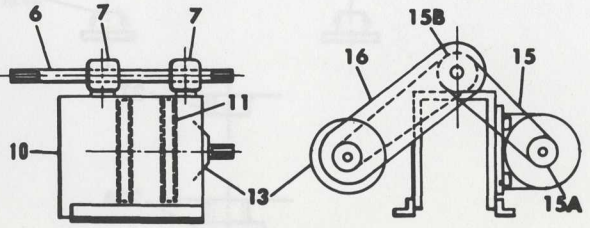


ARR. NO. 9

* 600 to 1200 has square inlet with no collar on inlet bell

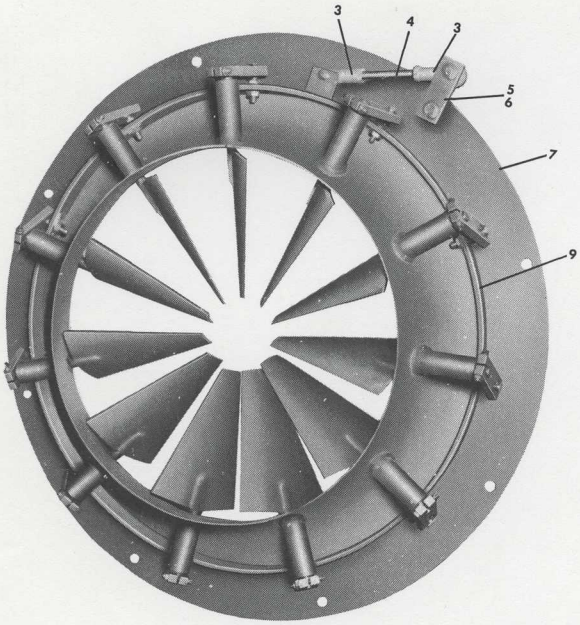


## DESIGN 5

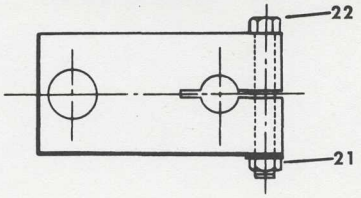


## DESIGN 6 & 6A

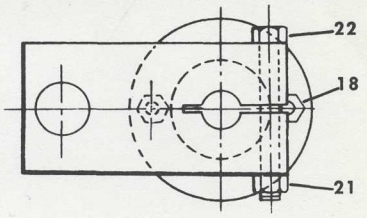


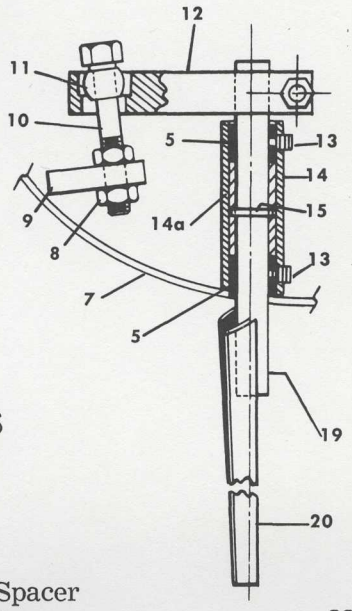


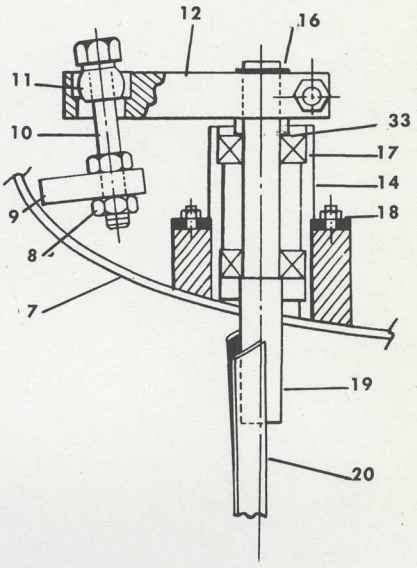


# VARIABLE INLET VANES
## Parts List

1. Control Lever
2. Quadrant
3. Teflon Insert Rod End
4. Control Rod
5. Bronze Oilite Bearings
6. Crank Assembly
7. Inlet Bell
8. Jam Nuts
9. Control Ring
10. Bearing Bolt
11. Teflon-Spherco Bearing
12. Vane Lever
13. Half Dog Point Set Screw — **Do Not Loosen or Remove**
14. Bearing Housing

14a. Steel Spacer
15. Roll Pin
16. Retaining Ring
17. "Nice Co" Prelube Ball Bearing
18. Weld Studs and Nuts
19. Vane Shaft
20. Vane
21. Flexloc Nut
22. Hex Bolt — Torque 20 ft. lbs. for $^{5}/_{16}$" Bolt; 30 ft. lbs. for $^{3}/_{8}$" Bolt

23. Knuckle
24. "Nice Co" Ball Bearings — Run Dry — No Lube Req'd.
25. Alemite Grease Fitting
26. Connecting Pin
27. Pin
28. Wheel Swivel
29. Wheel
30. Wheel Pin
31. Set Screw
32. Center Ring
33. Spacer

## TYPE HV

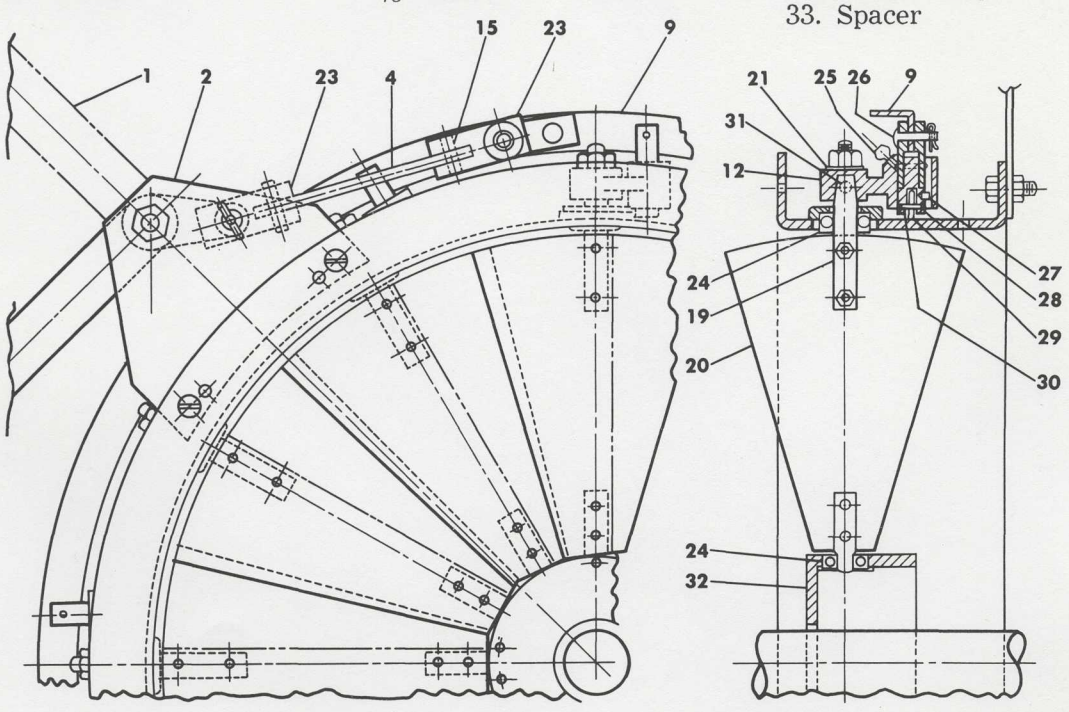

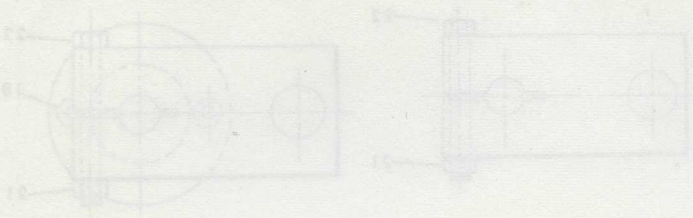



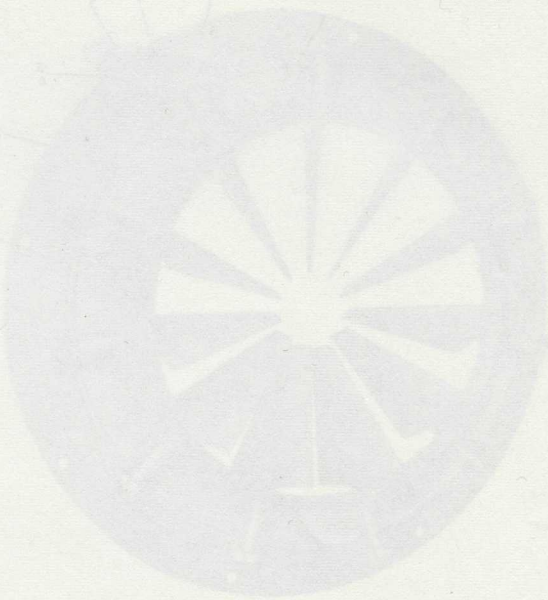

# OUTLET DAMPERS - Parts List

1. Channel Frame Assembly
2. Damper Blades
3. Quadrant
4. Control Lever
5. Wing Nut
6. KSM Weld Stud, Washer & Nut
7. Damper Lever
8. Cross Bar
9. Blade Shaft — Solid or Tubing
10. Huck Bolt
11. Hex Nut, Bolt & Lockwasher
12. Jam Nut
13. Roll Pin
14. Ball Bearing Housing
15. Bearing Spacer
16. Truarc Retaining Ring
17. Series 500 Nice Ball Bearings (or equal)
18. Connecting Bar
19. Fafnir Series 200 Shielded Ball Bearings (or equal)
20. Cast Iron Sleeve Bearing
21. Cast Iron Bearing Spacer
22. Johns Manville Style C Asbestos Packing (or equal)

## DESIGN 4 & 5

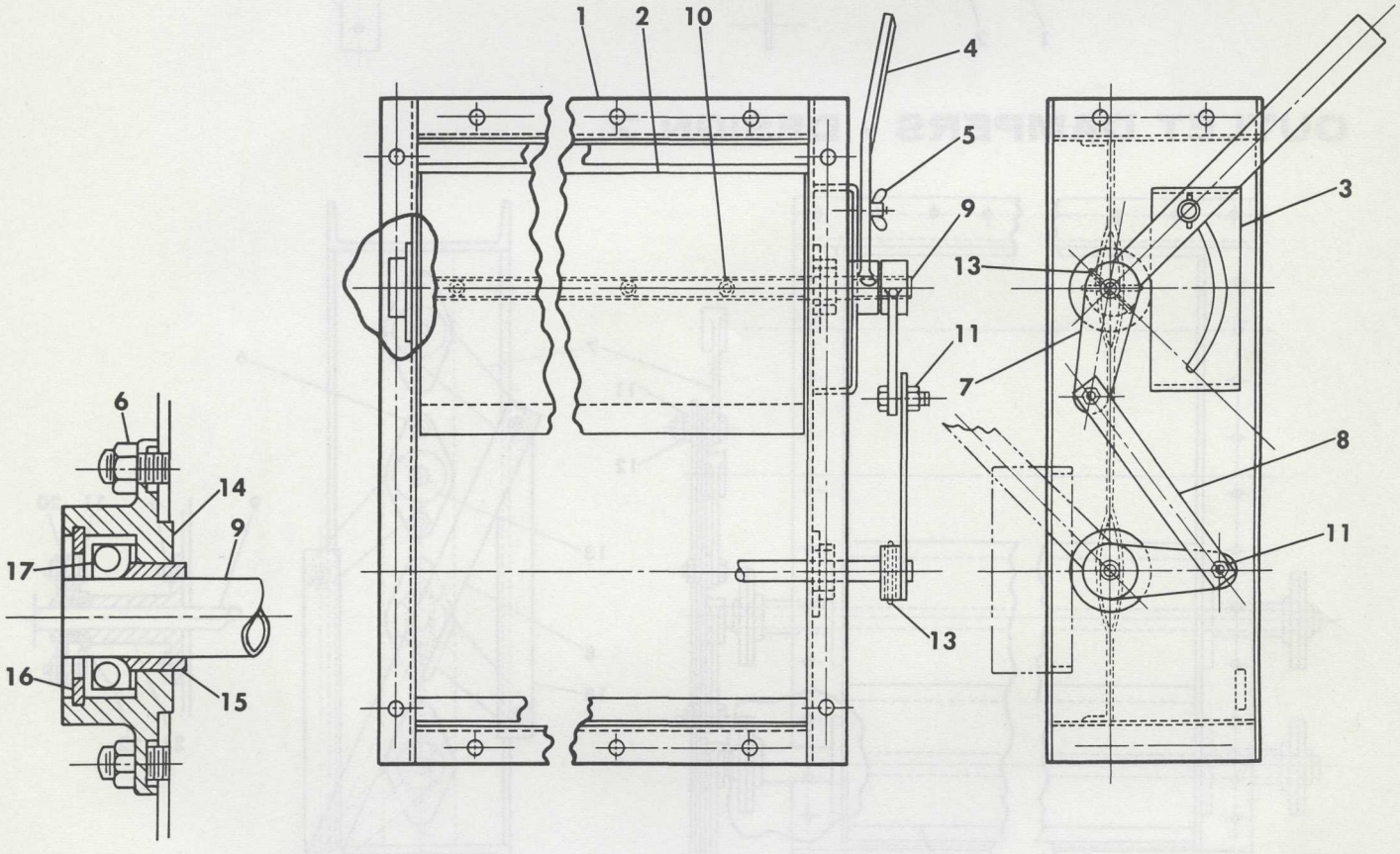

# OUTLET DAMPERS - DESIGN 6

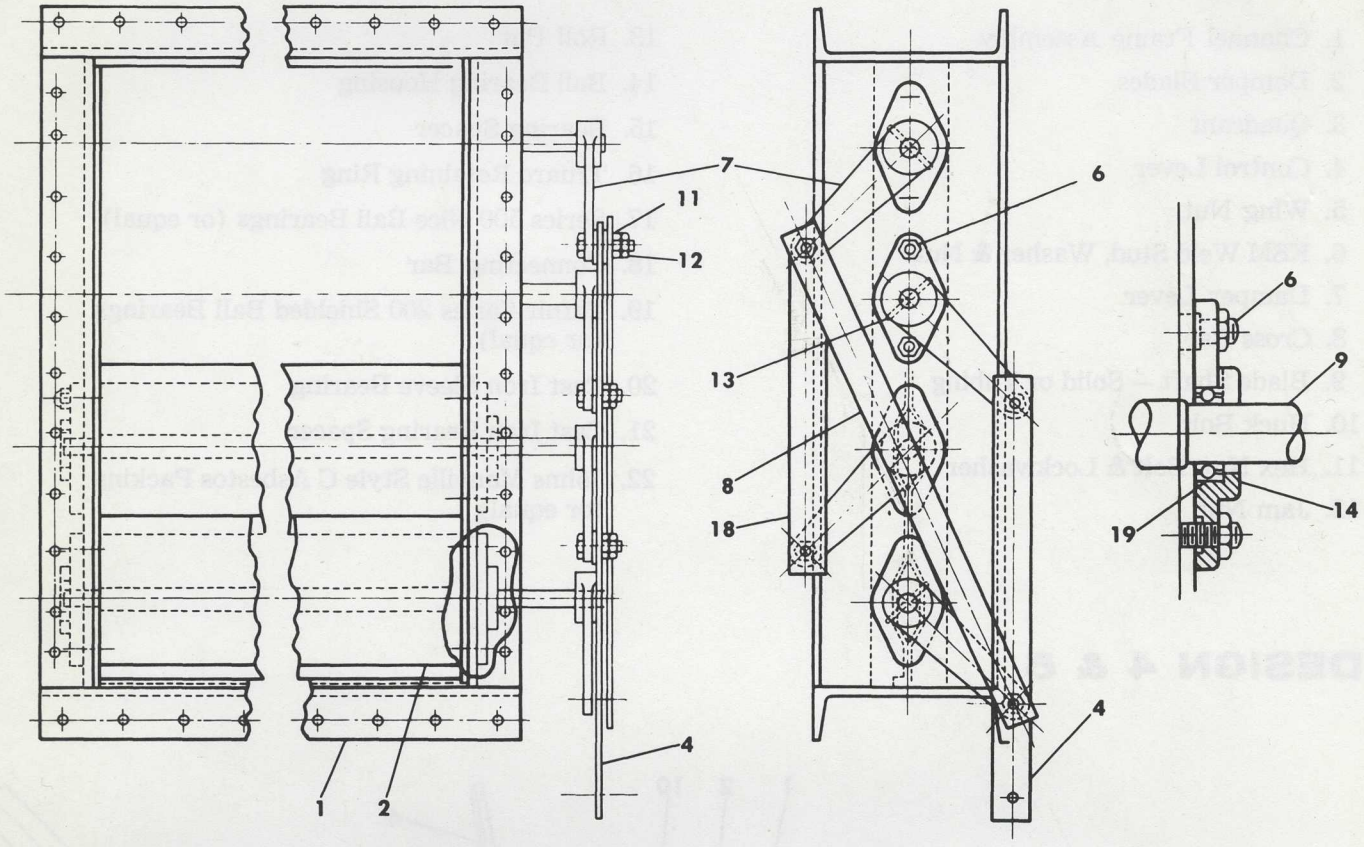


# OUTLET DAMPERS - DESIGN 7

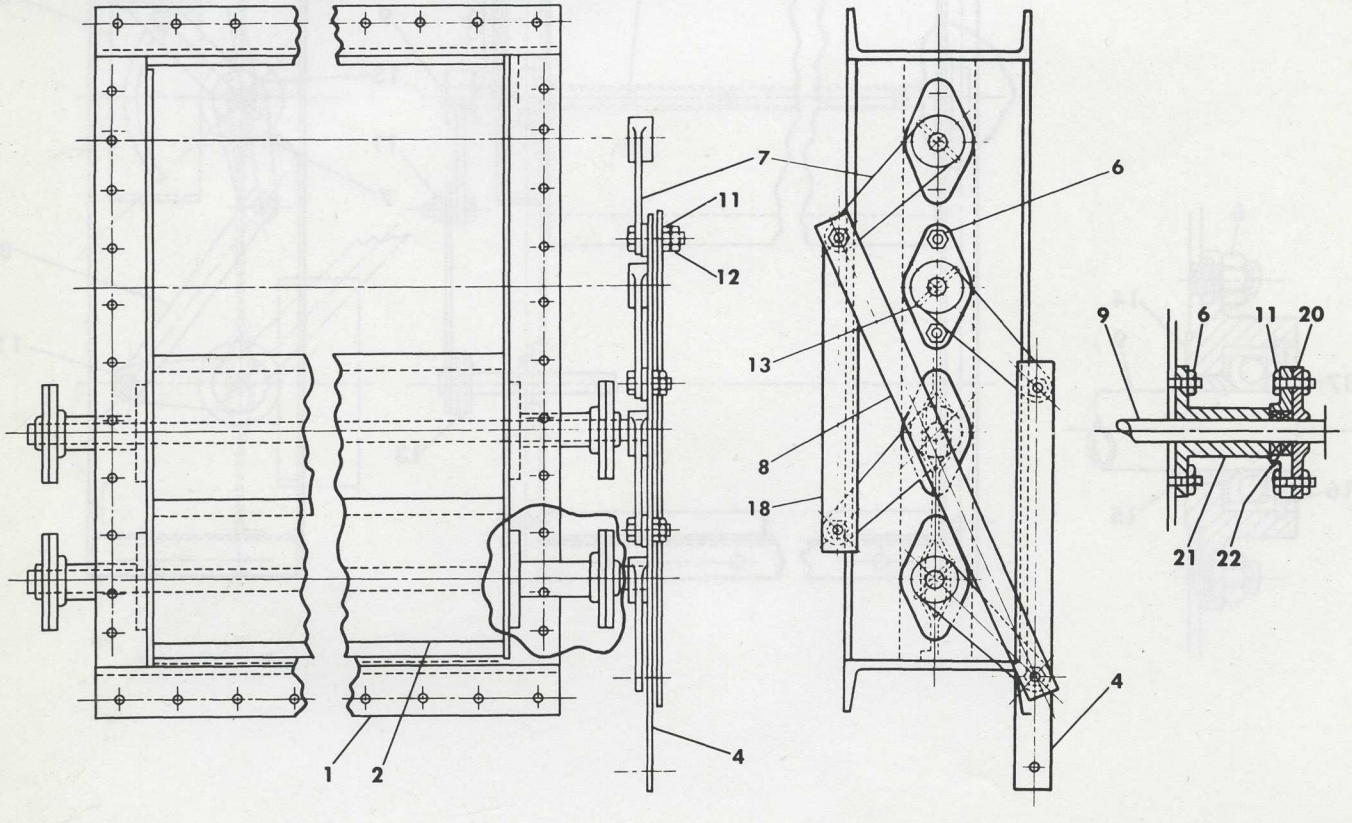


Litho in U.S.A. SAV. 3500 G 100 4-70

B. C. COAST SERVICE To Date May 13th, 1968

| Job. No. | | MATERIAL | LBAOUR | Total | |
|---|---|---|---|---|---|
| 1159 ? | Fabricate pipe - stoke hole area | 8.58 | 25.82 | 34.40 | maintenance |
| 1183 | Weld blow down pipe in our shop (Patricia) | | 9.60 | 9.60 | |
| 1184 | Welding to waste (Marguerite) | | 19.20 | 19.20 | maintenance |
| 509 | Weld Whistle Pilot (Patricia) | | 8.30 | 8.30 | |
| | | | | 19740.64 | |

Already Invoiced

| | | |
|---|---|---|
| Feb. 27 | - #6996 | $850.00 |
| Mar. 18 | - 7120 | 2150.00 |
| Mar. 29 | - 7196 | 1530.00 |
| Apr. 19 | - 7263 | 2676.80 |
| Apr. 30 | - 7339 | 4500.00 |
| | | $11706.80 |

PHONE: 386-3264 RESIDENCE:

# Edwards' Welding Ltd.

ESTABLISHED 1912

727 CALEDONIA STREET, VICTORIA, B.C.

Apr. 30th 8

DATE 196

B. C. Coast Service
468 Belleville St.
Victoria, B.C.

Attn: Mr. Hugh Tumilty

PORTABLE EQUIPMENT • STEEL CONSTRUCTION • BODY FABRICATION • BOILER REPAIRS

| QUAN. | DESCRIPTION | AMOUNT | TOTAL |
|---|---|---|---|
| | Pipe welding to boiler front, steam lines, oil lines, water columns etc. | | |
| | Progress draw to date | $3000.00 | |
| | Install copper tubing, fittings, mounting brackets etc. to boiler controls. | | |
| | Progress draw to date | 1500.00 | |
| | | | $4500.00 |
| | S.S.& M.A. Tax No. 8000041 | | |
| | Fed. Tax exempt-C.S.A. ships use | | |
| | JOB No. | | |

7339

B. C. COAST SERVICE  To date April 16th, 1968  (These figures are direct sheet take off and are not necessarily accouate of complete)

| Job No's. | | MATERIAL | LABOUR | | STATUS | |
|---|---|---|---|---|---|---|
| 170 | Elbows | 301.21 | 1130.39 | 1431.60 | Comp. | |
| | | | | | Already Invoiced | |
| 334 | Vice | | 27.79 | 27.79 | Comp. | |
| | | | | | Feb. 27 - #6996 | $850.00 |
| | | | | | Mar. 18 - 7120 | 2150.00 |
| 1037 | Valves | | 128.25 | 128.25 | Comp. | " 29 - 7196 1530.00 |
| | | | | | | 4530.00 |
| 1064 | Bar | 1001.70 | 1148.30 | 2150.00 | Comp. | |
| 1065 | Extras General | 78.14 | 1412.40 | 1490.54 | N. F. | |
| 1085 | Wrought Iron rails, gates, etc. | 181.28 | 1673.72 | 1855.00 | Comp. | |
| 1101 | Air Receiver | 42.45 | 33.90 | 76.35 | Comp. | |
| 1110 | Brackets, gussets etc. (Air compressor) | 3.50 | 220.13 | 223.63 | N. F. | |
| 1111 | Burner Pans Pres. Patricia | | 33.88 | 33.88 | N. F. | |
| 1123 | Pipe Welding etc. | 47.51 | 2316.02 | 2363.53 | N. F. | |
| 1127 | Overflow oil fuel tank | - | - | - | N. F. | |

9780.57
Pd. 4530.00
Bal 5250.57

To April 28 inclusive

| | | Labour ~~Mat.~~ |
|---|---|---|
| #1123 | Pipe Welding & welding to Boiler Front | 603457 |
| | material: 100 M. Bolts & Nuts 5/16 x 3 | |
| | 40' - 5/16 x 1 F.B. | |
| | 20' - 1/4 x 1 1/4 x 1 1/4 | |
| | 20' - 1/4 x 1 1/2 x 1 1/2 | |
| | 20' - 1/4 x 1 1/2 F.B. | |
| | 10' - 1/2 R | |
| | 1 ⊄ - 3/8 R | |
| | 2' - 3/8 x 2 F.B. | |
| | 24 - 3/4 nuts | |
| | 24 - 3/4 x 3 1/2 V.M.D. | |
| | 40 - 3/16 x 1 F.B. | |
| | 60' - 3/16 x 1 1/2 x 1 1/2 OA | |
| | 1 sht. Plate 3/16 x 48 x 96 | 10303 |
| | Cartage | 300 |

To April 28th inclusive

| | | Labour |
|---|---|---|
| #1127 | 16 hrs. Cavelling to rivets in over flow oil Fuel Tank | 1500 |
| #1145 | Install Copper Tubing<br>material:<br>Fittings (Andrew Shered)<br>18' - 1/8 x 1 alum. F.B. | 136440<br><br><br>1160 |
| #1110 | Brackets, gussets & fitments to Air Compressor etc.<br>material:<br>1'6 x 3' - 3/8 PL<br>4' - 2 x 2 x 1/4 L<br>5' - 2 x 1/4 F.B.<br>Handy Messenger | 36488<br><br><br>652<br>350<br>0 |

WINEL
ASSEN

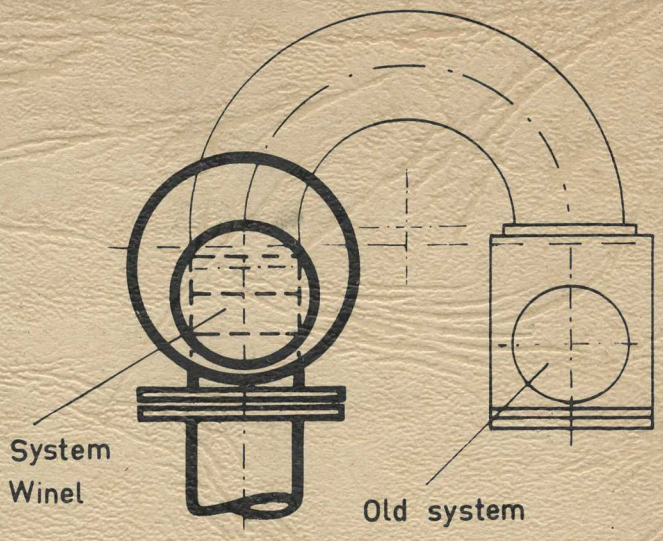


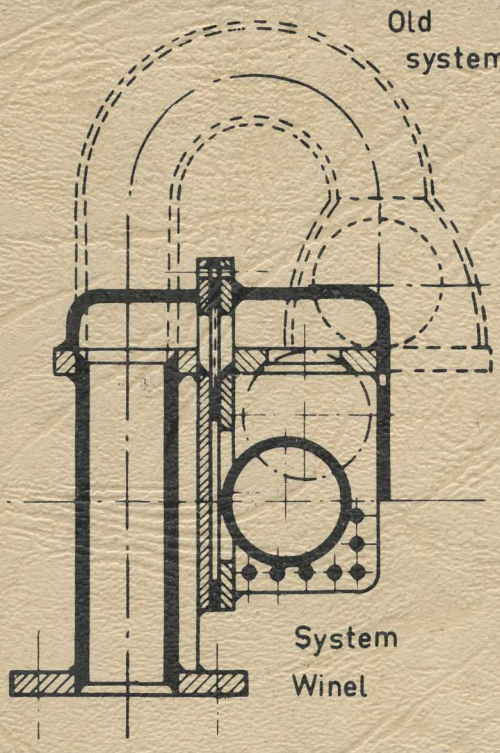


Mr N.J. Timothy

WINEL
OF AMERICA

# Take the difference

# Take Winel vent valves

# and ventilation systems

SHIP'S EQUIPMENT
HORTICULTURAL MACHINERY
ENGINE BUILDING
CONSTRUCTION-WORK

# Winel of America

Division of Winel - Assen - Holland

**8304 Wyatt Road, Broadview Heights, OHIO 44147, U.S.A. Tel.(216) 526-5484 Telex (TWX) 810 427 9165**

YOUR REF:
OUR REF:

November, 1972.

Gentlemen,

It is a pleasure for us to send you ,enclosed, our new documentation about our specialized marine equipment.

More than 8,000 ships have been supplied with the Winel Ventilation Systems during the last 15 years, which really is a good recommendation. Our equipment is approved by all Classification Societies known by us, including United States Coast Guard and American Bureau of Shipping, and it also meets the latest requirements of the Load Line Convention 1966.

May we ask your special attention for the front cover of the brochure, which tells you how Winel Valves are fitted and save you a goose-neck pipe and much space. Also larger sizes can be fitted alongside the rails and there is no need to close the valves in bad weather as they operate automatically.

In order to keep the brochure as clear as possible, we did not mention our complete program. We can tell you that our modern works fabricate many products for shipbuilding industry.

We hope you will keep this brochure in your file and we kindly ask you to give our equipment attention for your present and future ships.

Very truly yours,

Winel of America.

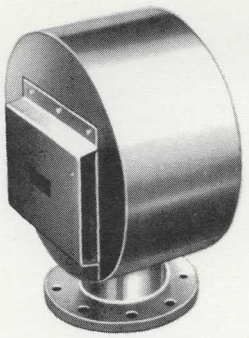

WINEL standard vent valve

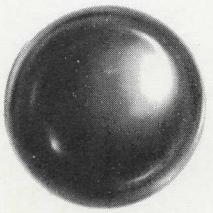

WINEL float-ball

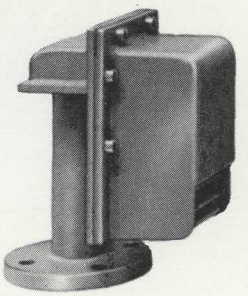

WINEL FA. type vent valve

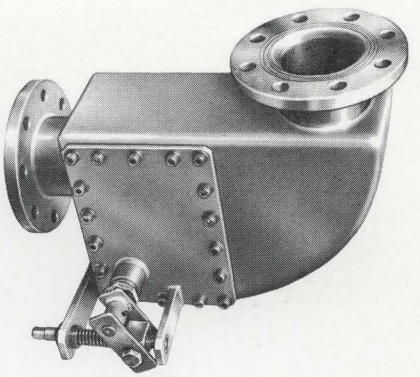

WINEL stormvalve

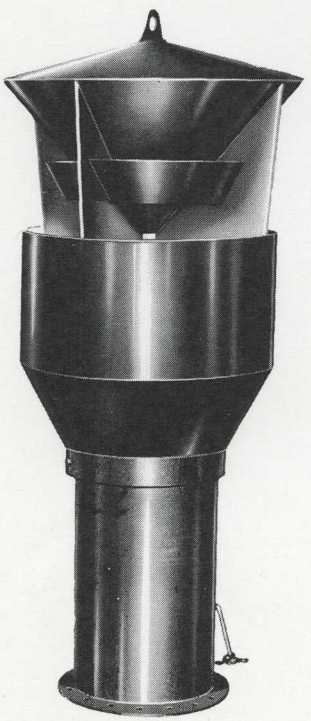

BRIGITTE Inlet ventilation cowl

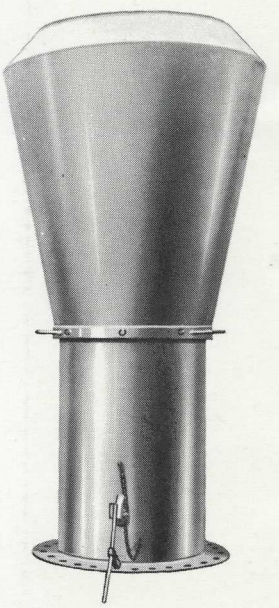

MILOS Outlet ventilation cowl

WINEL ASSEN

# Simplicity
# Solidity
# Service

WINEL OF AMERICA

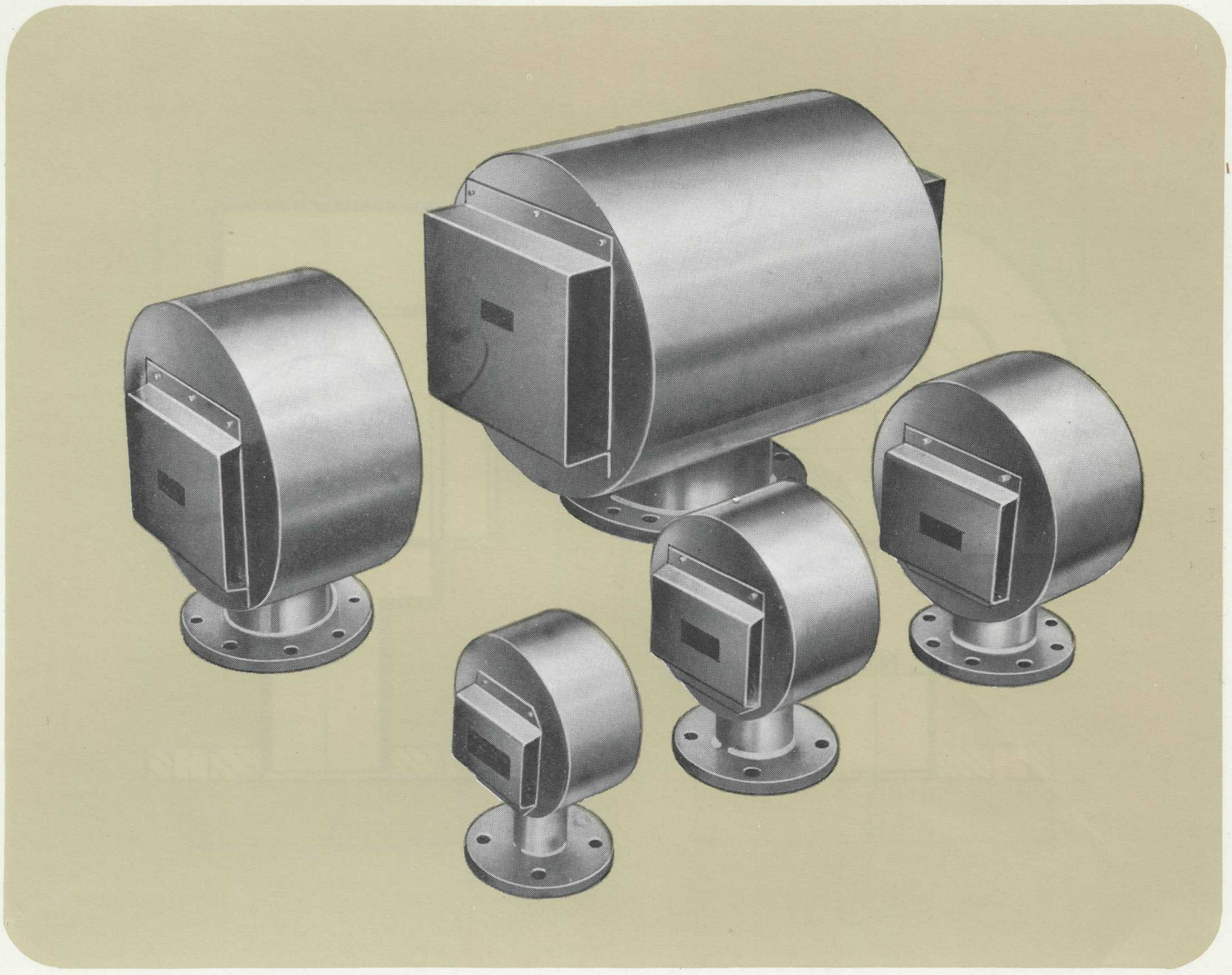

# WINEL TANK VENT CHECK VALVES

## GENERAL TECHNICAL INFORMATION:

THE WINEL TANK VENT CHECK VALVE consists of two chambers. The outer chamber is connected to the vent-pipe by flange-, butt-welded-, or threaded connection. The inner chamber has a seat, which can be closed by the ball. The inner chamber is connected to the outer casing with an outlet over which a flame-screen can be fitted. The float-ball prevents water entering the tank, and as the water comes over the deck, the ball will close the valve. The discharge of gasses will not be obstructed and free vent-flow to and from the tank is secured. Flame-screens, if fitted, will prevent flames backfiring into the tank. These so-called filters are easily changeable, if necessary.

## PRACTICAL ADVANTAGES:

— Quick and simple fitting through choice of flange-, butt-welded-, or threaded connection.

— They do not occupy much space.

— They make considerable saving in the lower-deck piping.

## CONSTRUCTION:

Steel, galvanized- or black execution.
Flange-, butt-welded-, or threaded connection.
P.V.C. float-ball.

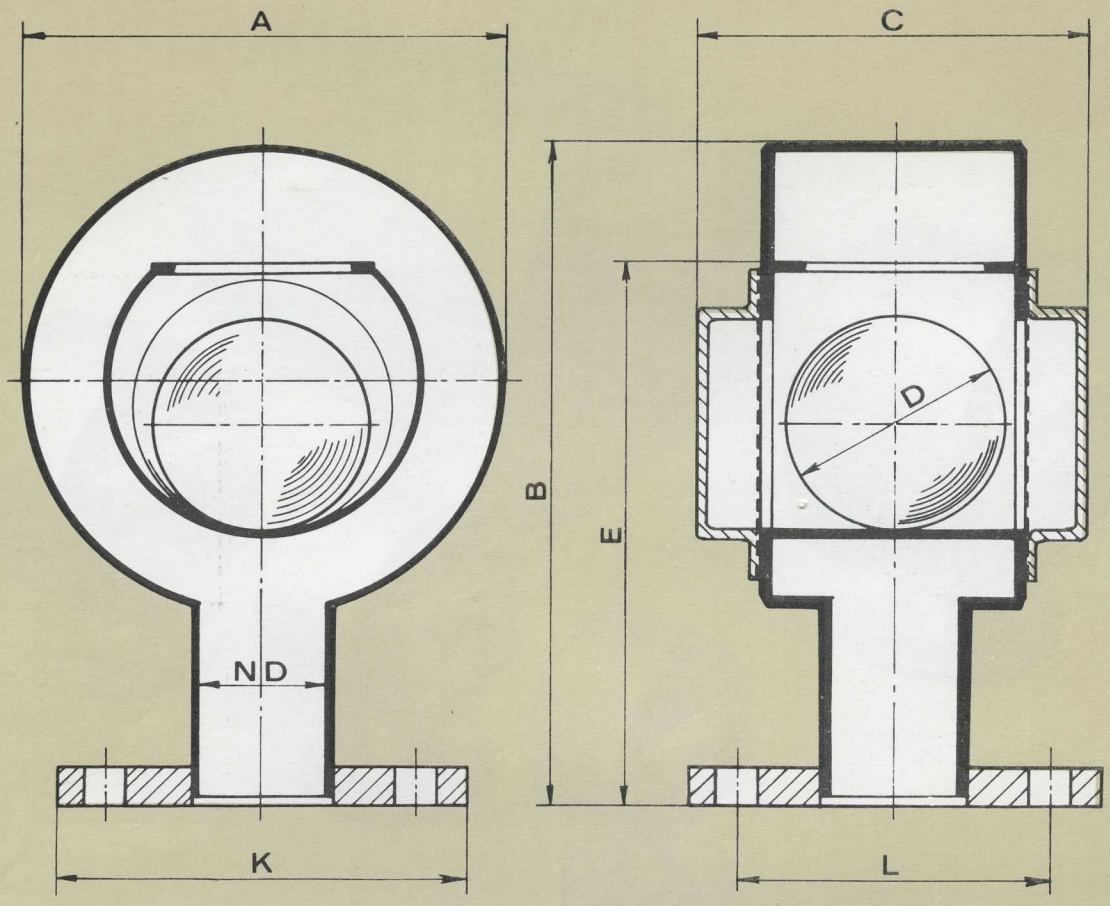


# WINEL TANK VENT CHECK VALVES

| ND | 40 | 50 | 65 | 80 | 90 | 100 | 125 | 150 | 175 |
|---|---|---|---|---|---|---|---|---|---|
| A | 190 | 190 | 225 | 250 | 265 | 315 | 390 | 460 | 490 |
| B | 265 | 265 | 300 | 325 | 340 | 390 | 470 | 560 | 580 |
| C | 150 | 150 | 180 | 200 | 200 | 240 | 270 | 355 | 355 |
| E | 230 | 230 | 255 | 275 | 280 | 330 | 380 | 470 | 490 |
| D | 85 | 85 | 100 | 115 | 115 | 150 | 185 | 240 | 240 |
| K | 150 | 165 | 185 | 200 | 200 | 220 | 250 | 285 | 315 |
| L | 110 | 125 | 145 | 160 | 160 | 180 | 210 | 240 | 270 |

**"Winel" standard tank vent check valve, single-house.**

**Galvanized execution, with or without flamescreen, with P.V.C. float ball, connection at choice with flange, butt-welded or threadsocket.**

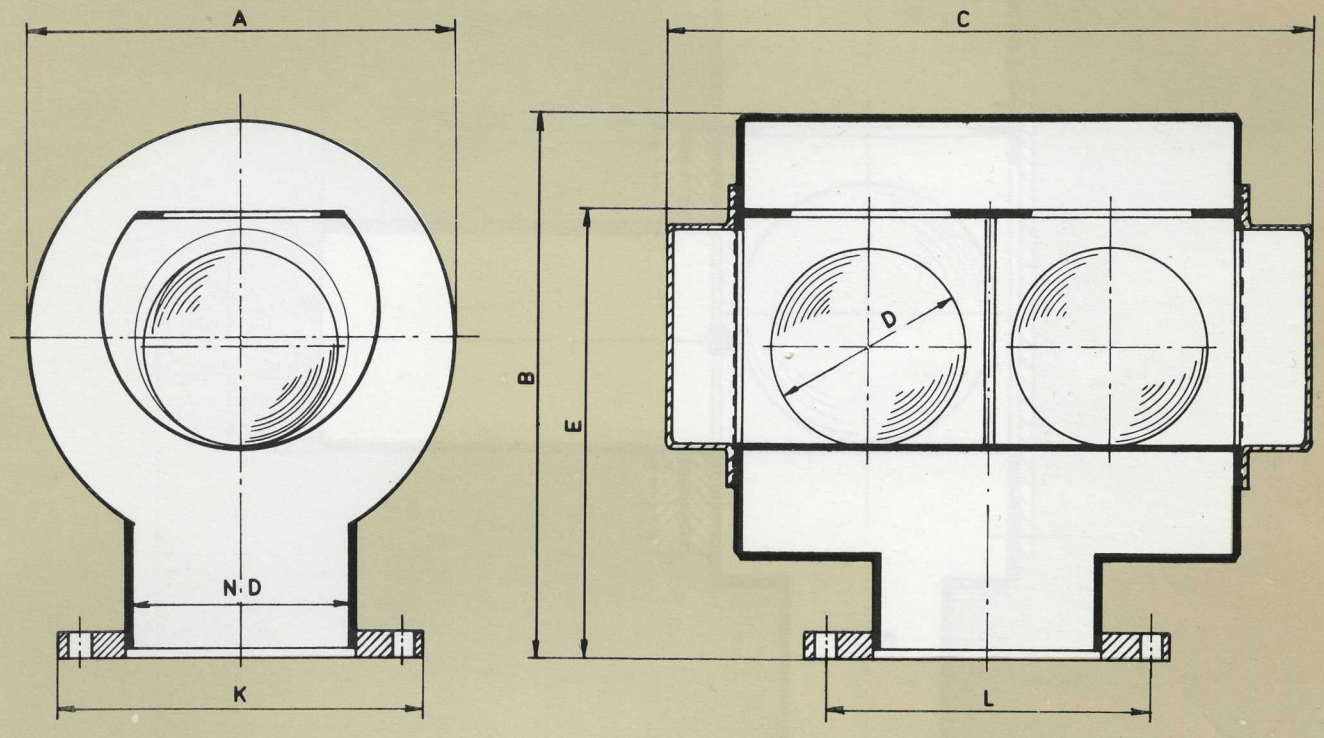


# WINEL TANK VENT CHECK VALVES

| ND | 200 | 225 | 250 | 300 | 350 | 400 |
|---|---|---|---|---|---|---|
| A | 395 | 440 | 480 | 580 | 650 | 700 |
| B | 490 | 530 | 575 | 650 | 710 | 850 |
| C | 590 | 620 | 690 | 780 | 900 | 1050 |
| E | 405 | 445 | 475 | 555 | 600 | 650 |
| D | 185 | 185 | 240 | 300 | 340 | 340 |
| K | 340 | 365 | 395 | 445 | 505 | 565 |
| L | 295 | 320 | 350 | 400 | 460 | 515 |

**"Winel" standard tank vent check valve, double-house.**

**Galvanized execution, with or without flamescreen, with P.V.C. float ball, connection at choice with flange, butt-welded or threadsocket.**

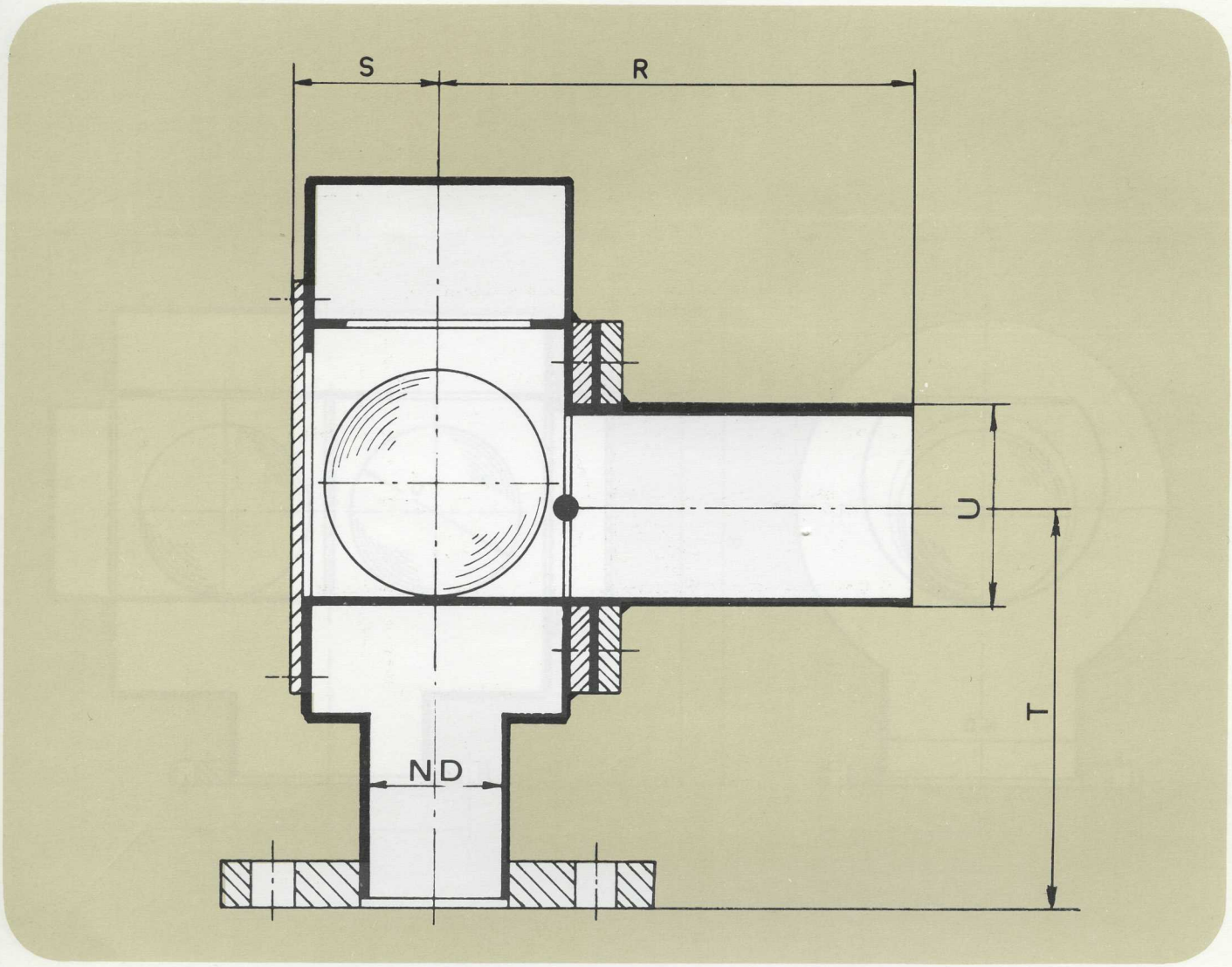


# WINEL TANK VENT CHECK VALVES

| ND | 40 | 50 | 65 | 80 | 90 | 100 | 125 | 150 | 175 |
|---|---|---|---|---|---|---|---|---|---|
| R | 200 | 200 | 210 | 220 | 220 | 235 | 250 | 285 | 285 |
| S | 55 | 55 | 65 | 75 | 75 | 90 | 105 | 140 | 140 |
| T | 140 | 140 | 160 | 155 | 160 | 200 | 210 | 245 | 280 |
| U | 57 | 70 | 76 | 95 | 108 | 133 | 178 | 194 | 219 |

**TYPE OVERFLOW.**

**"Winel" overflow tank vent check valve, single-house.**

**Please see for further sizes page 2.**

**Galvanized execution, with or without flamescreen, with P.V.C. float ball, connection at choice with flange, butt-welded or threadsocket.**

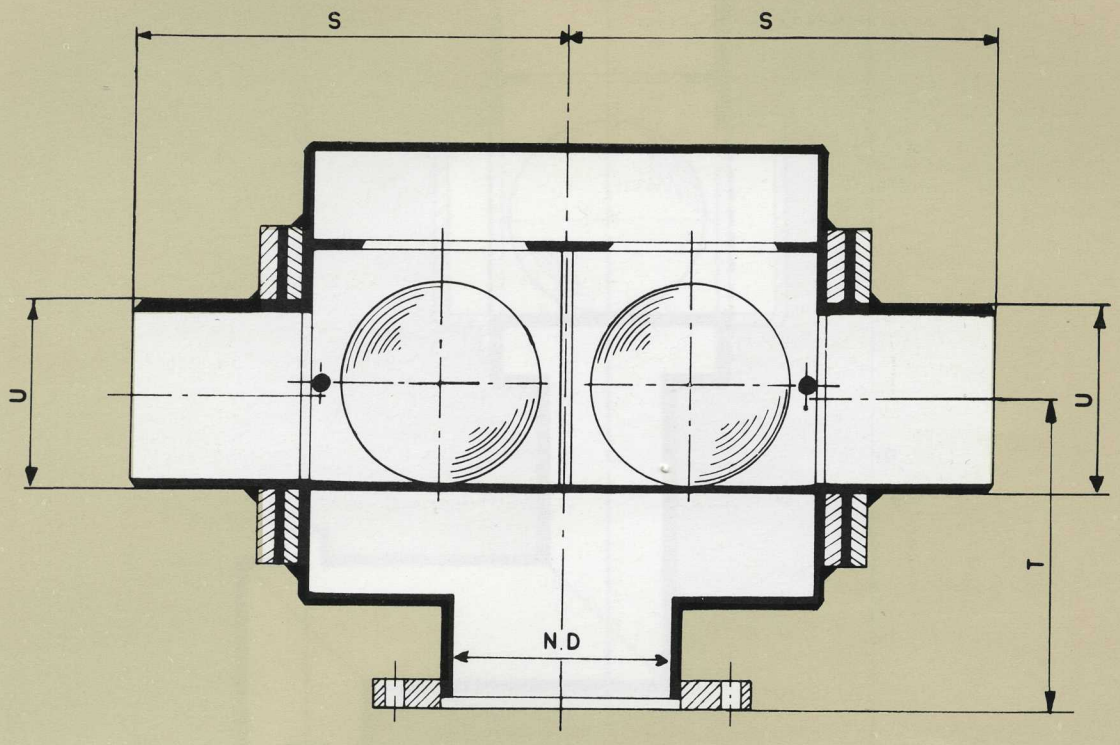


# WINEL TANK VENT CHECK VALVES

| ND | 200 | 225 | 250 | 300 | 350 | 400 |
|---|---|---|---|---|---|---|
| S | 380 | 395 | 425 | 470 | 500 | 550 |
| T | 245 | 270 | 305 | 350 | 360 | 360 |
| U | 159 | 194 | 219 | 267 | 298 | 324 |

**TYPE OVERFLOW.**

**"Winel" overflow tank vent check valve, double-house.**

**Please see for further sizes page 3.**

**Galvanized execution, with or without flamescreen, with P.V.C. float ball, connection at choice with flange, butt-welded or threadsocket.**

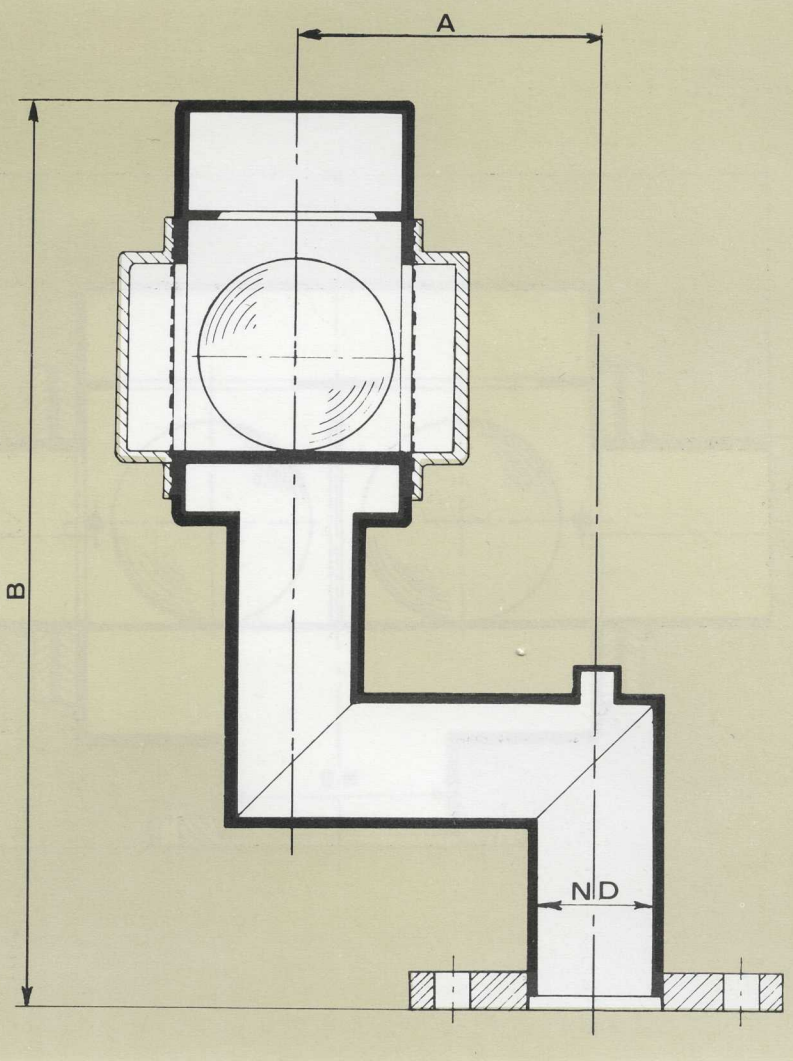


# WINEL TANK VENT CHECK VALVES

| ND | 40 | 50 | 65 | 80 | 90 | 100 | 125 | 150 | 175 |
|---|---|---|---|---|---|---|---|---|---|
| A | 125 | 125 | 140 | 150 | 150 | 170 | 185 | 220 | 230 |
| B | 425 | 425 | 470 | 500 | 520 | 600 | 700 | 820 | 980 |

**"Winel" tank vent check valve with possibility for dip-rod.**

**Please see for further sizes page 2.**

**Galvanized execution, with or without flamescreen, with P.V.C. float ball, connection at choice with flange, butt-welded or threadsocket.**

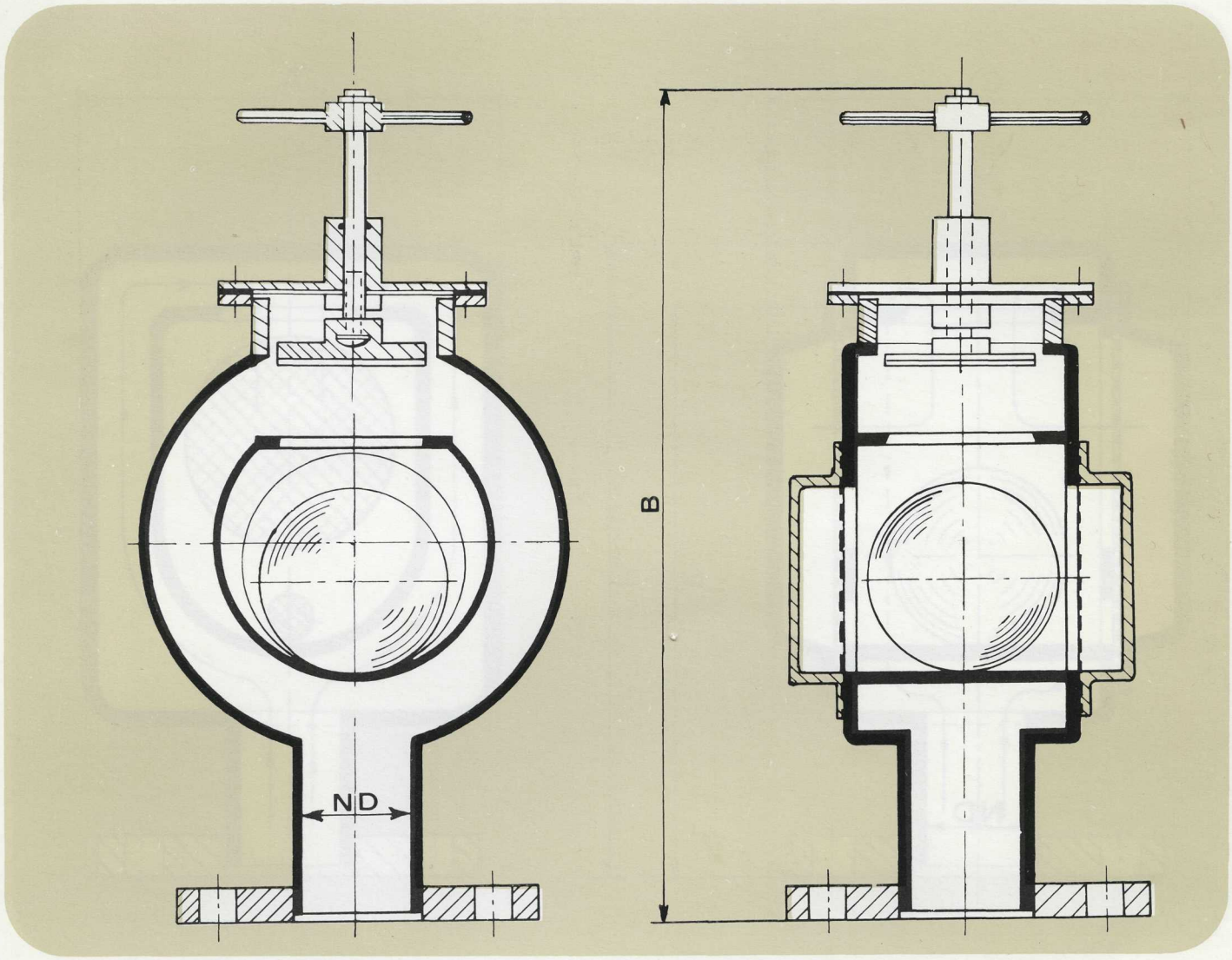


# WINEL TANK VENT CHECK VALVES

| ND | 40 | 50 | 65 | 80 | 90 | 100 | 125 | 150 | 175 |
|---|---|---|---|---|---|---|---|---|---|
| B | 490 | 490 | 565 | 605 | 670 | 720 | 830 | 920 | 940 |

**"Winel" free-flow/stop tank vent check valve.**

**Please see for further sizes page 2.**

**Galvanized execution, with or without flamescreen, with P.V.C. float ball, connection at choice with flange, butt-welded or threadsocket.**

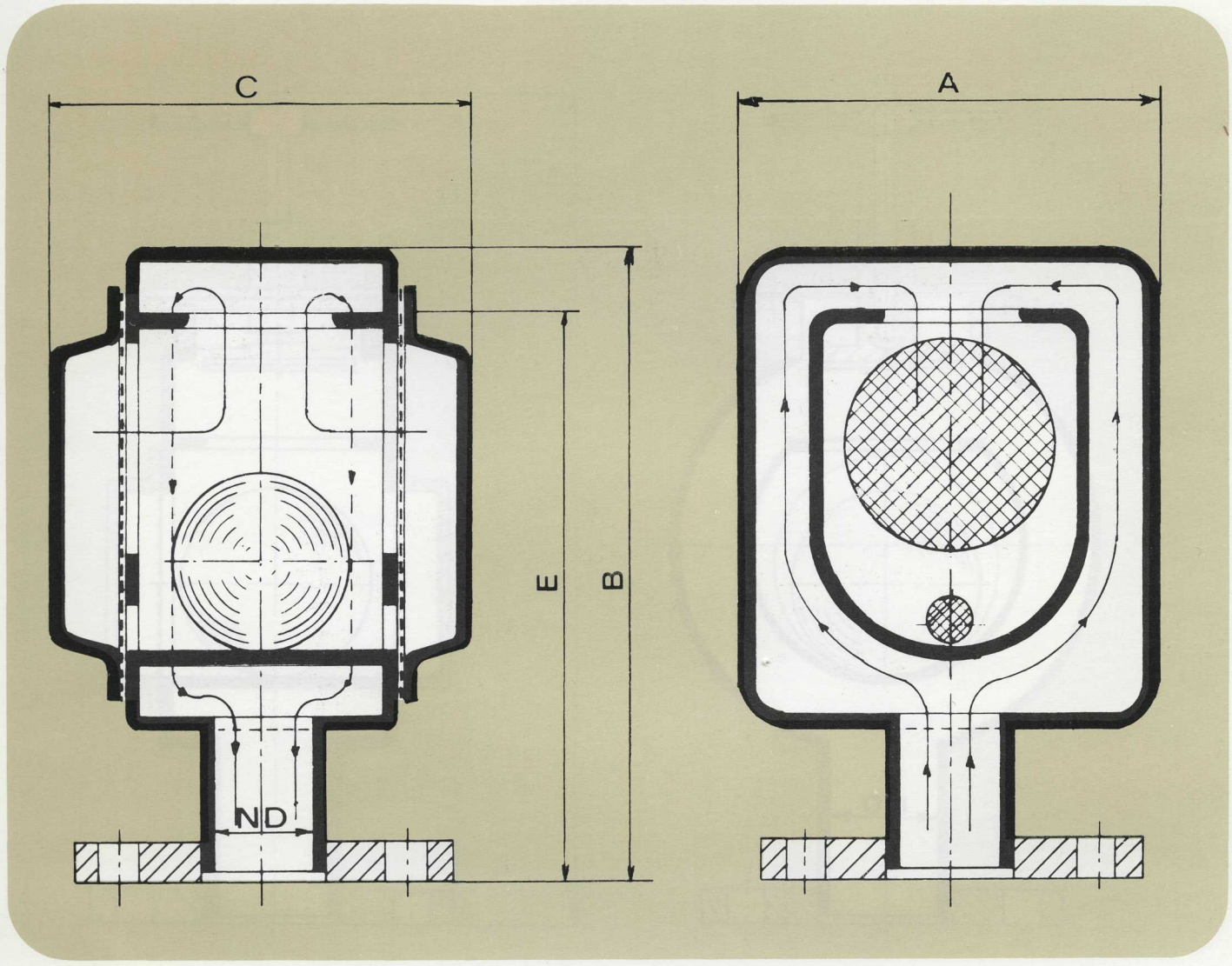


# WINEL TANK VENT CHECK VALVES

| ND | 40 | 50 | 65 | 80 | 90 | 100 | 125 | 150 | 175 |
|---|---|---|---|---|---|---|---|---|---|
| A | 150 | 150 | 175 | 205 | 205 | 255 | 300 | 385 | 385 |
| B | 280 | 280 | 315 | 360 | 360 | 430 | 510 | 635 | 635 |
| C | 145 | 145 | 170 | 190 | 190 | 225 | 260 | 330 | 330 |
| E | 260 | 260 | 290 | 325 | 325 | 390 | 465 | 585 | 585 |

**"Winel" tank check valve for high velocity flow rates.**

**Galvanized execution, with or without flamescreen, with P.V.C. float ball, connection at choice with flange, butt-welded or threadsocket.**

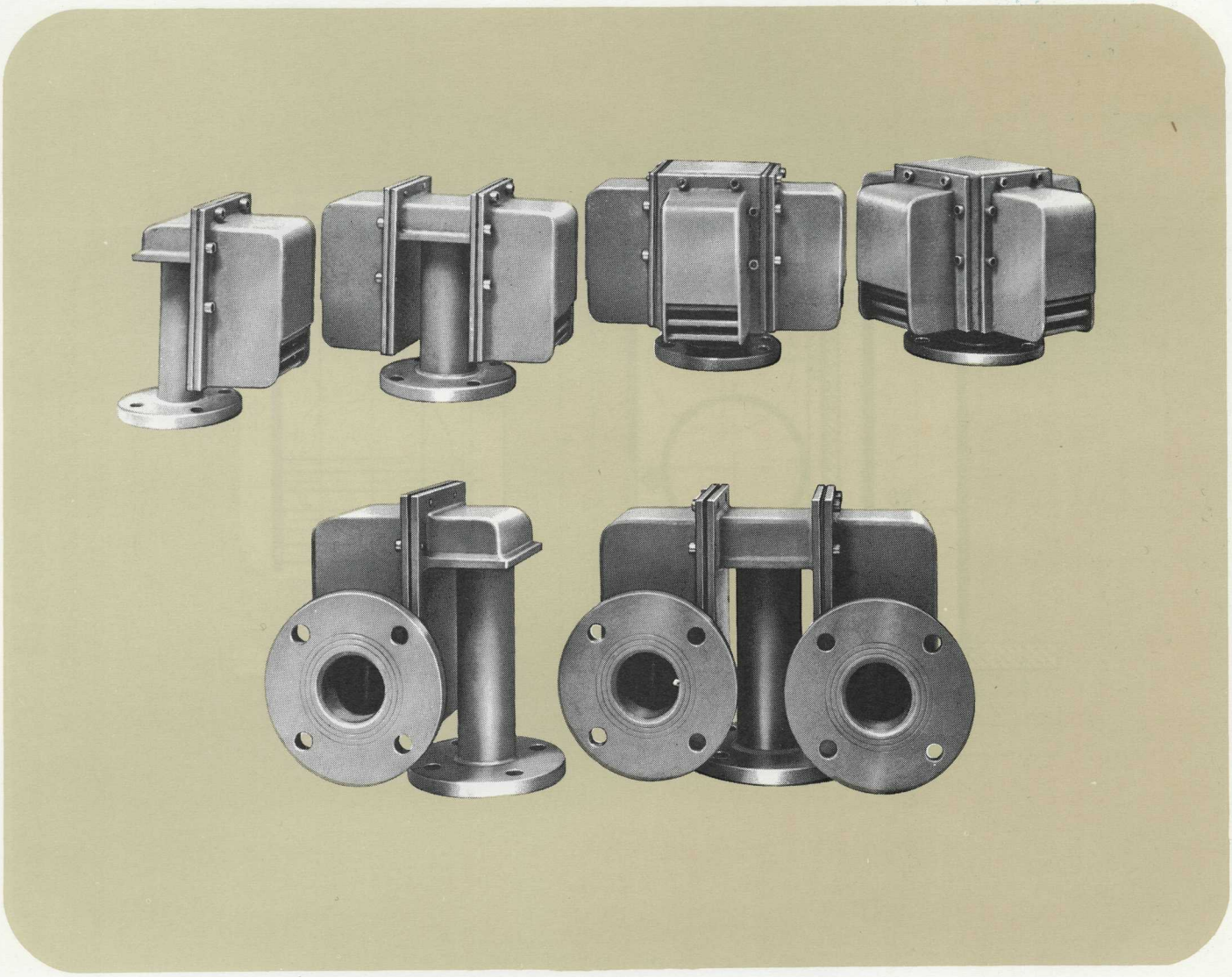

# WINEL TANK VENT CHECK VALVES

## GENERAL TECHNICAL INFORMATION:

**THE NEW WINEL TANK VENT CHECK VALVES have been developed in order to reduce flow resistance as tanks are now filled and emptied at much higher speed than hitherto, in order to decrease transfer time.**
**The tank vent check valves types FA-3 and FA-4 were specially developed to cope with these higher velocities.**
**The operation is based on the well-known float-ball function and in construction resembles the gooseneck. The chief advantage of the new types over the gooseneck is the considerable lower fitting height.**
**The valve is of a robust steelwelded construction, galvanized after fabrication. The make of P.V.C. ball has been succesfully used by us for very many years in our other valves and its life is unlimited. The construction permits easy access for inspection of the ball (approving our ball in Summer, 1971, Lloyd's intimated they would wish to examine it at each survey), and also of the flame screens which can be removed without difficulty for cleaning or replacement.**

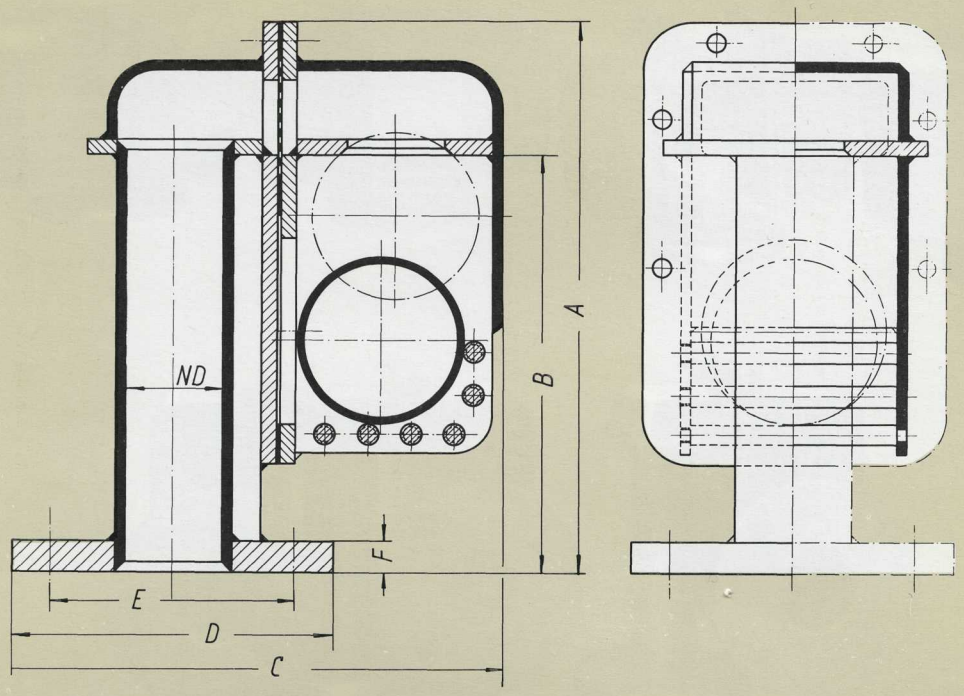


# WINEL TANK VENT CHECK VALVES

| ND | A | B | C | D Ø | E Ø | F |
|---|---|---|---|---|---|---|
| 40 | 296 | 234 | 235 | 150 | 110 | 14 |
| 50 | 306 | 236 | 248 | 165 | 125 | 16 |
| 65 | 318 | 236 | 266 | 185 | 145 | 16 |
| 80 | 352 | 258 | 294 | 200 | 160 | 18 |
| 90 | 360 | 258 | 305 | 200 | 160 | 18 |
| 100 | 423 | 313 | 358 | 220 | 180 | 18 |
| 125 | 546 | 410 | 457 | 250 | 210 | 20 |
| 150 | 666 | 510 | 548 | 285 | 240 | 20 |
| 175 | 688 | 512 | 577 | 315 | 270 | 22 |

"Winel" tank vent check valve

## Type FA3. 1

Single-house execution,

Construction: steel, black execution or galvanized after fabrication, with or without flamescreens, with P.V.C. floatball, with flange-, butt-welded or threaded connection.

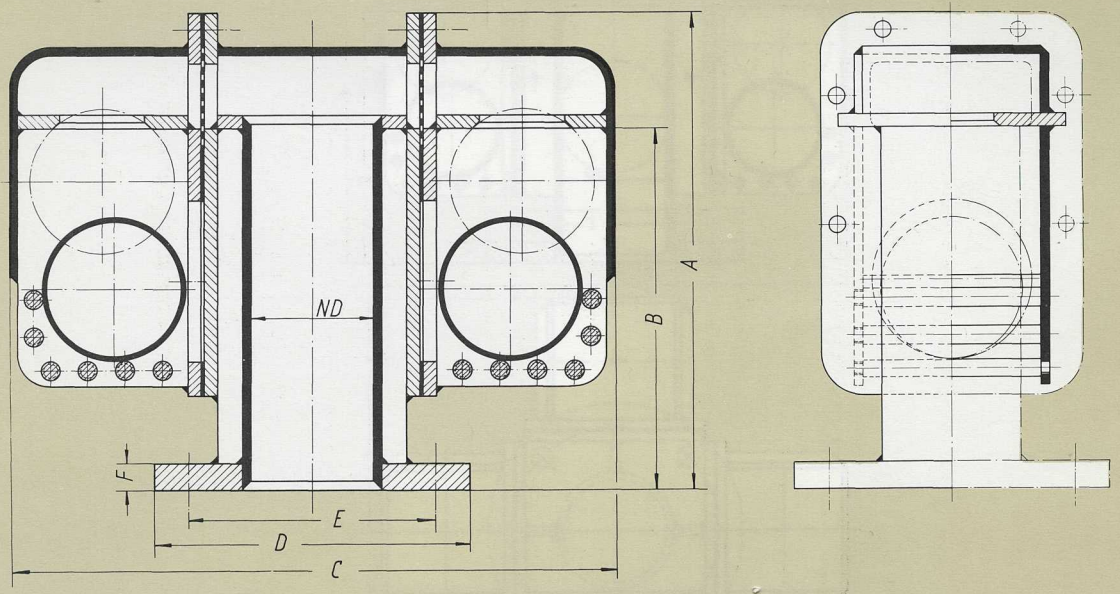


# WINEL TANK VENT CHECK VALVES

| ND | A | B | C | D Ø | E Ø | F |
|---|---|---|---|---|---|---|
| 90 | 320 | 236 | 374 | 200 | 160 | 18 |
| 100 | 352 | 258 | 432 | 220 | 180 | 18 |
| 125 | 362 | 258 | 458 | 250 | 210 | 20 |
| | | | | | | |
| 175 | 548 | 410 | 718 | 315 | 270 | 22 |
| 200 | 668 | 510 | 872 | 340 | 295 | 22 |
| | | | | | | |
| 250 | 690 | 512 | 928 | 395 | 350 | 24 |
| 300 | 730 | 512 | 988 | 445 | 400 | 24 |
| 350 | 750 | 514 | 1034 | 505 | 460 | 24 |
| 400 | 980 | 680 | 1325 | 565 | 515 | 26 |

"Winel" tank vent check valve

## Type FA3. 2

Double-house execution,

Construction: steel, black execution or galvanized after fabrication, with or without flamescreens, with P.V.C. floatball, with flange-, butt-welded or threaded connection.

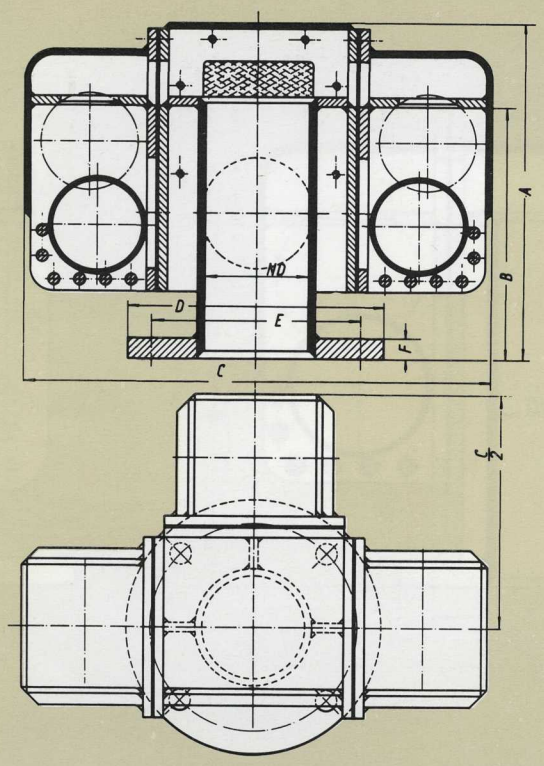


# WINEL TANK VENT CHECK VALVES

| ND | A | B | C | D Ø | E Ø | F |
|---|---|---|---|---|---|---|
| 150 | 367 | 260 | 514 | 285 | 240 | 20 |
| 200 | 432 | 317 | 602 | 340 | 295 | 22 |
| 250 | 676 | 514 | 986 | 395 | 350 | 24 |
| 300 | 701 | 514 | 1036 | 445 | 400 | 24 |
| 350 | 723 | 514 | 1101 | 505 | 460 | 24 |
| 400 | 746 | 516 | 1145 | 565 | 515 | 26 |

"Winel" tank vent check valve

## Type FA3. 3

Three-house execution,

**Construction: steel, black execution or galvanized after fabrication, with or without flamescreens, with P.V.C. floatball, with flange-, butt-welded or threaded connection.**

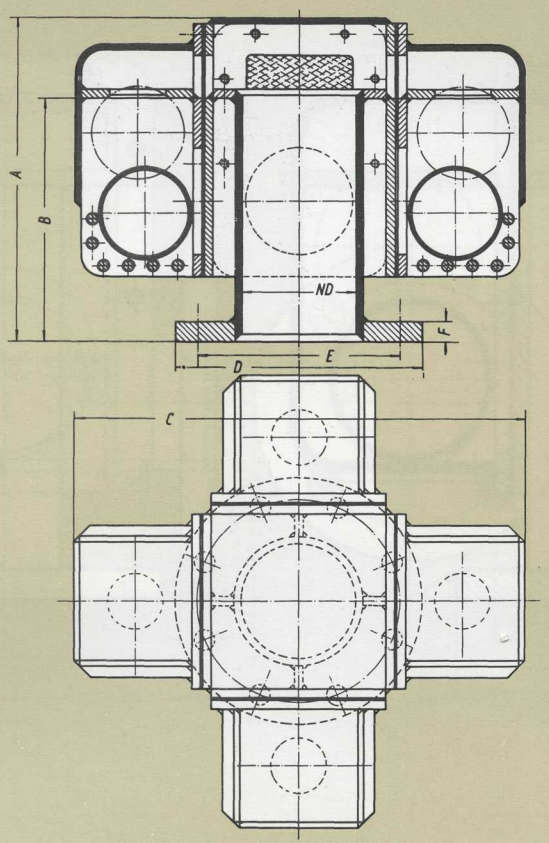


# WINEL TANK VENT CHECK VALVES

| ND | A | B | C | D Ø | E Ø | F |
|---|---|---|---|---|---|---|
| 250 | 550 | 414 | 812 | 395 | 350 | 24 |
| 300 | 676 | 514 | 994 | 445 | 400 | 24 |
| 350 | 700 | 514 | 1048 | 505 | 460 | 24 |
| 400 | 725 | 514 | 1100 | 565 | 515 | 26 |

"Winel" tank vent check valve

## Type FA3. 4

Four-house execution,

**Construction: steel, black execution or galvanized after fabrication, with or without flamescreens, with P.V.C. floatball, with flange-, butt-welded or threaded connection.**

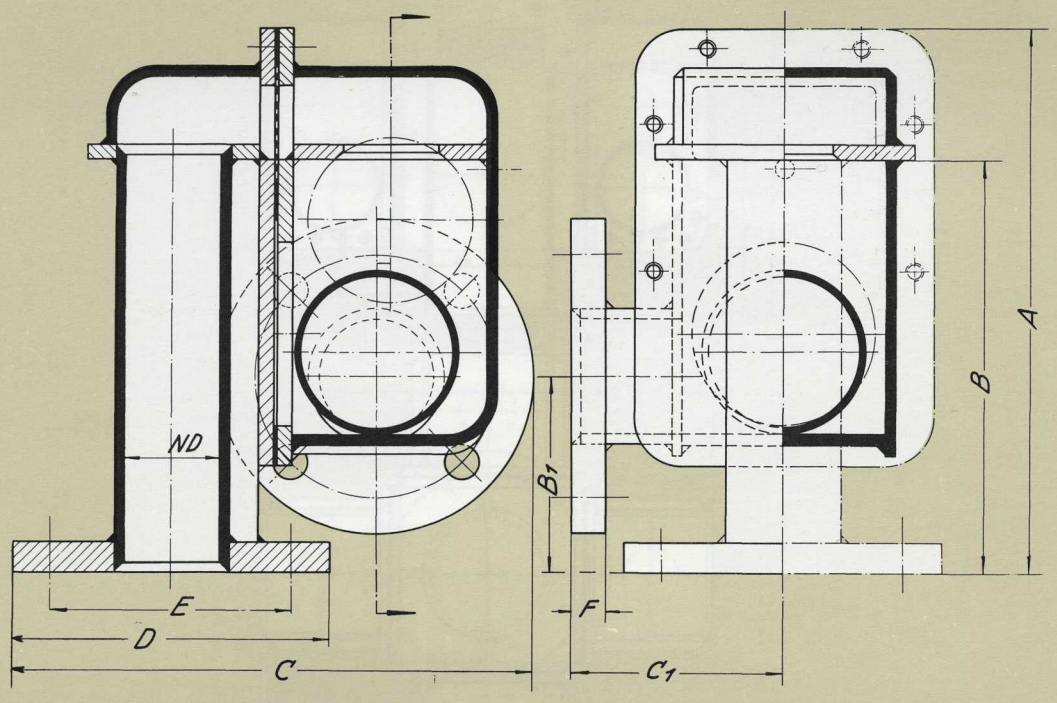


# WINEL TANK VENT CHECK VALVES

| ND | A | B | B 1 | C | C 1 | D Ø | E Ø | F |
|---|---|---|---|---|---|---|---|---|
| 40 | 296 | 234 | 103 | 235 | 120 | 150 | 110 | 14 |
| 50 | 306 | 236 | 111 | 248 | 135 | 165 | 125 | 16 |
| 65 | 318 | 236 | 119 | 266 | 154 | 185 | 145 | 16 |
| 80 | 352 | 258 | 128 | 294 | 166 | 200 | 160 | 18 |
| 90 | 360 | 258 | 134 | 305 | 175 | 200 | 160 | 18 |
| 100 | 423 | 313 | 140 | 358 | 188 | 220 | 180 | 18 |
| 125 | 546 | 410 | 156 | 457 | 224 | 250 | 210 | 20 |
| 150 | 666 | 510 | 170 | 548 | 251 | 285 | 240 | 20 |
| 175 | 688 | 512 | 185 | 577 | 278 | 315 | 270 | 22 |

"Winel" tank vent check valve

## Type FA4. 1

OVERFLOW

Single-house execution

**Construction: steel, black execution or galvanized after fabrication, with or without flamescreens, with P.V.C. floatball, with flange-, butt-welded or threaded connection.**

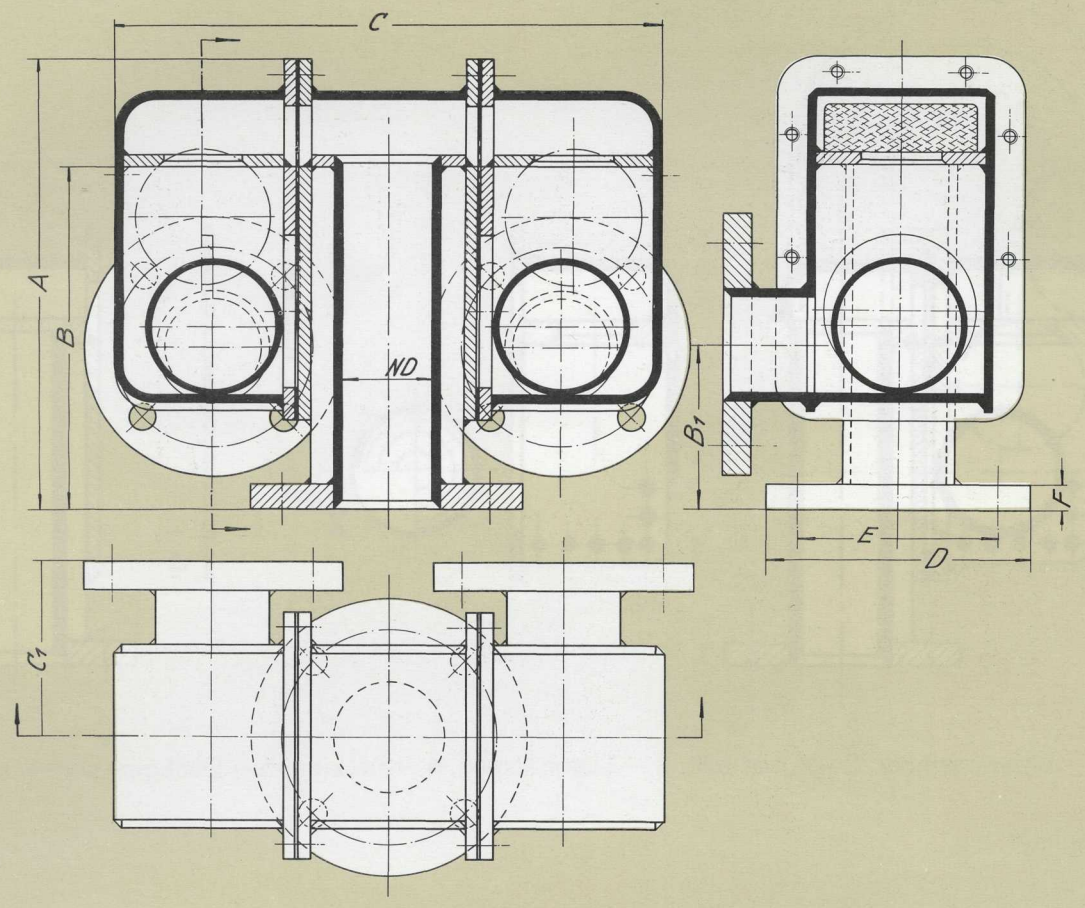


# WINEL TANK VENT CHECK VALVES

| ND | A | B | B 1 | C | C 1 | D Ø | E Ø | F |
|---|---|---|---|---|---|---|---|---|
| 90 | 320 | 236 | 119 | 374 | 154 | 200 | 160 | 18 |
| 100 | 352 | 258 | 128 | 432 | 166 | 220 | 180 | 18 |
| 125 | 362 | 258 | 134 | 458 | 175 | 250 | 210 | 20 |
| 175 | 548 | 410 | 156 | 718 | 224 | 315 | 270 | 22 |
| 200 | 668 | 510 | 170 | 872 | 251 | 340 | 295 | 22 |
| 250 | 690 | 512 | 185 | 928 | 278 | 395 | 350 | 24 |
| 300 | 730 | 512 | 212 | 988 | 327 | 445 | 400 | 24 |
| 350 | 750 | 514 | 225 | 1034 | 354 | 505 | 460 | 24 |
| 400 | 980 | 680 | 262 | 1325 | 415 | 565 | 515 | 26 |

"Winel" tank vent check valve

## Type FA4. 2

OVERFLOW

Double-house execution

**Construction: steel, black execution or galvanized after fabrication, with or without flamescreens, with P.V.C. floatball, with flange-, butt-welded or threaded connection.**

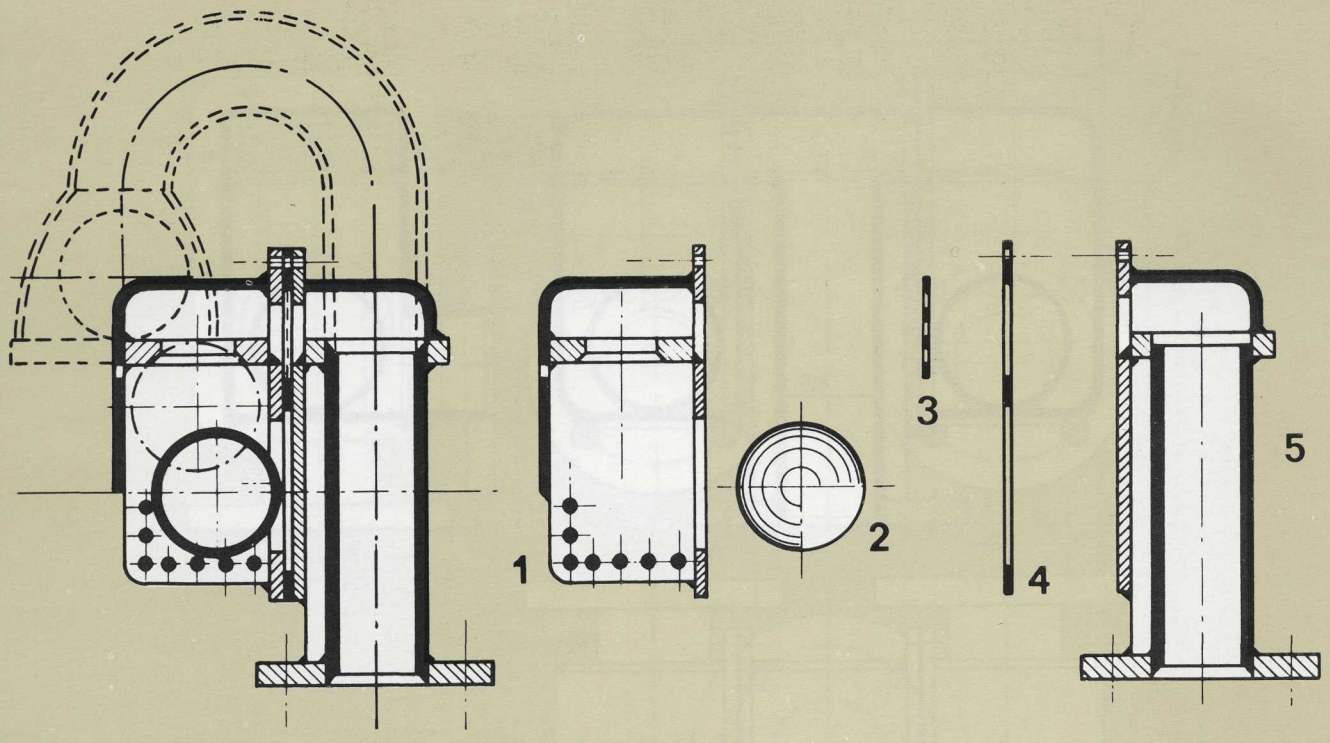


1 – Float-chamber, 2 – Float-ball, 3 – Flame-screen, 4 – Packing, 5 – Deckpipe connection

# WINEL TANK VENT CHECK VALVES

**Approved by all Classification Bureaux known by us. We reserve the right to improve/modify any design without being bound by any earlier delivery.**

# WINEL
# STORM VALVES

## PATENT APPLIED FOR

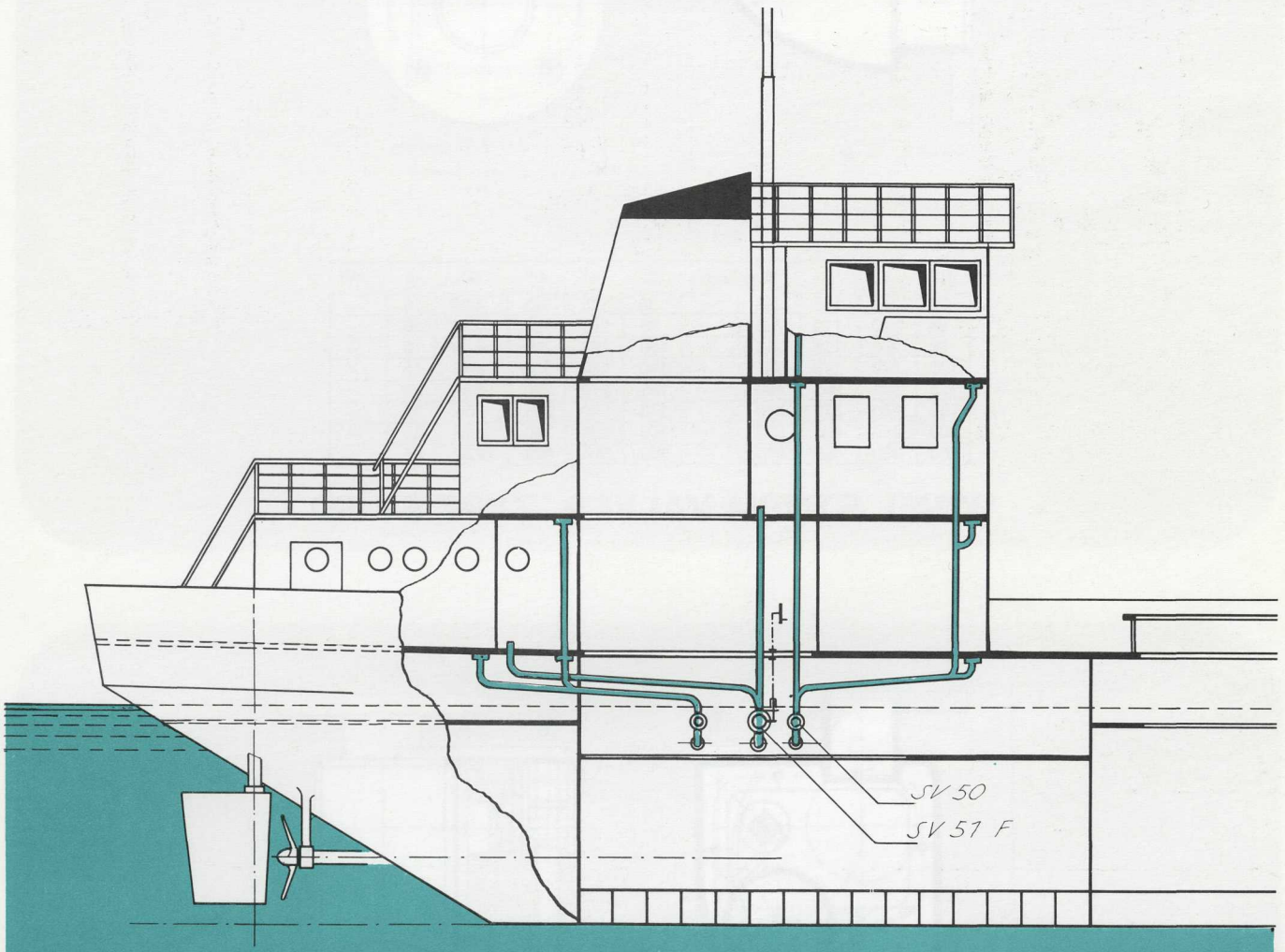


WINEL STORM VALVES are of a solid steel fabrication, galvanized in-, and outside.
Moving parts in contact with water are of non-rusting material.
The float-ball is of a well-tried synthetic material and will withstand many years of use.
Among the advantages of the WINEL storm-valve are :

— They can be fitted vertically as well as horizontally;

— An exact vertical position, as required by other storm-valves, is not necessary;

— The maximum deviation can be 90° because the float-ball is guided to the ball-seat, unless there is stronger counter-pressure.

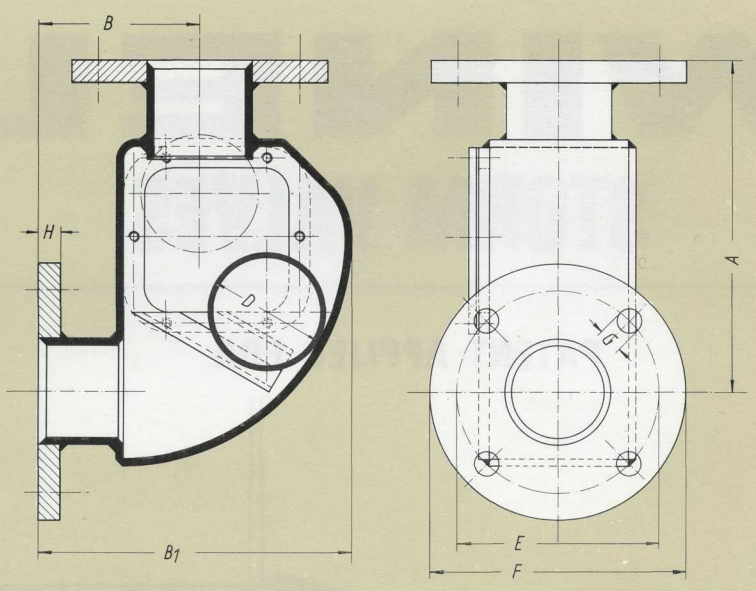


| ND | A | B | $B_1$ | C | D | $E^{\varnothing}$ | $F^{\varnothing}$ | $G^{\varnothing}$ | H | $J^{\varnothing}$ |
|---|---|---|---|---|---|---|---|---|---|---|
| 50 | 240 | 115 | 225 | – | 85 | 125 | 165 | 4.18 | 16 | – |
| 65 | 240 | 115 | 225 | – | 85 | 145 | 185 | 4.18 | 16 | – |
| 80 | 285 | 135 | 265 | – | 100 | 160 | 200 | 4.18 | 16 | – |
| 100 | 370 | 175 | 345 | – | 130 | 180 | 220 | 8.18 | 18 | – |
| 125 | 525 | 250 | 490 | – | 185 | 210 | 250 | 8.18 | 20 | – |
| 150 | 680 | 325 | 640 | – | 240 | 240 | 285 | 8.22 | 20 | – |
| 200 | 850 | 400 | 800 | – | 300 | 295 | 340 | 8.22 | 22 | – |
| 250 | 850 | 400 | 800 | – | 300 | 350 | 395 | 12.22 | 24 | – |

## WINEL STORM VALVES TYPE SV 50

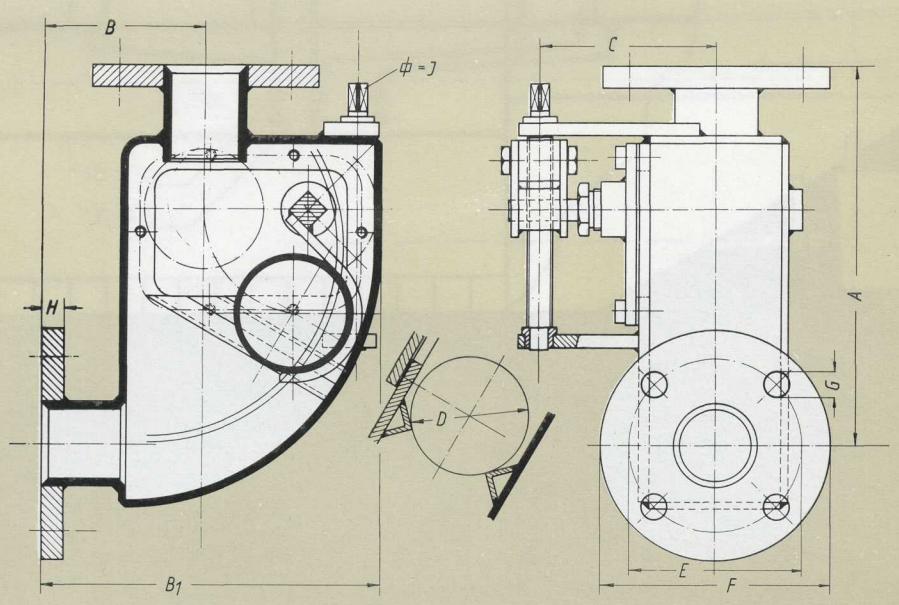


| ND | A | B | $B_1$ | C | D | $E^{\varnothing}$ | $F^{\varnothing}$ | $G^{\varnothing}$ | H | $J^{\varnothing}$ |
|---|---|---|---|---|---|---|---|---|---|---|
| 50 | 270 | 115 | 245 | 125 | 85 | 125 | 165 | 4.18 | 16 | 12 |
| 65 | 270 | 115 | 245 | 125 | 85 | 145 | 185 | 4.18 | 16 | 12 |
| 80 | 320 | 135 | 290 | 125 | 100 | 160 | 200 | 4.18 | 16 | 12 |
| 100 | 415 | 175 | 375 | 140 | 130 | 180 | 220 | 8.18 | 18 | 14,5 |
| 125 | 590 | 250 | 535 | 140 | 185 | 210 | 250 | 8.18 | 20 | 14,5 |
| 150 | 760 | 325 | 690 | 140 | 240 | 240 | 285 | 8.22 | 20 | 14,5 |
| 200 | 950 | 400 | 865 | 160 | 300 | 295 | 340 | 8.22 | 22 | 16 |
| 250 | 950 | 400 | 865 | 160 | 300 | 350 | 395 | 12.22 | 24 | 16 |

## WINEL STORM VALVES TYPE SV 51

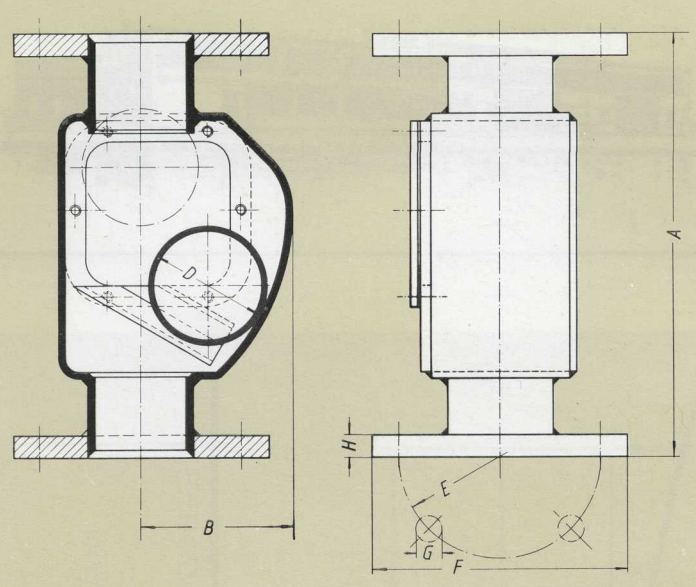


| ND | A | B | $B_1$ | C | D | $E^{\varnothing}$ | $F^{\varnothing}$ | $G^{\varnothing}$ | H | $J^{\#}$ |
|---|---|---|---|---|---|---|---|---|---|---|
| 50 | 305 | 110 | – | – | 85 | 125 | 165 | 4.18 | 16 | – |
| 65 | 305 | 110 | – | – | 85 | 145 | 185 | 4.18 | 16 | – |
| 80 | 335 | 130 | – | – | 100 | 160 | 200 | 4.18 | 16 | – |
| 100 | 400 | 170 | – | – | 130 | 180 | 220 | 8.18 | 18 | – |
| 125 | 625 | 240 | – | – | 185 | 210 | 250 | 8.18 | 20 | – |
| 150 | 755 | 310 | – | – | 240 | 240 | 285 | 8.22 | 20 | – |
| 200 | 975 | 390 | – | – | 300 | 295 | 340 | 8.22 | 22 | – |
| 250 | 975 | 390 | – | – | 300 | 350 | 395 | 12.22 | 24 | – |

## WINEL STORM VALVES TYPE SV 52

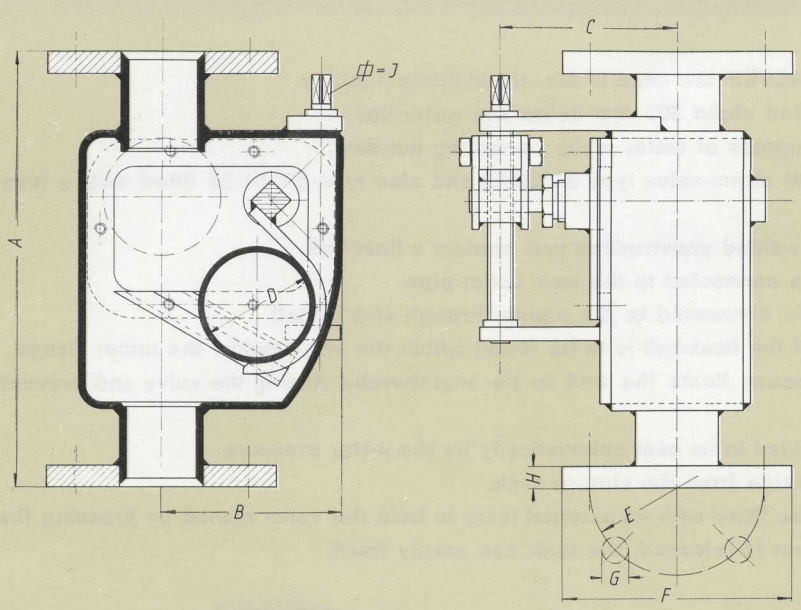


| ND | A | B | $B_1$ | C | D | $E^{\varnothing}$ | $F^{\varnothing}$ | $G^{\varnothing}$ | H | $J^{\#}$ |
|---|---|---|---|---|---|---|---|---|---|---|
| 50 | 315 | 130 | – | 125 | 85 | 125 | 165 | 4.18 | 16 | 12 |
| 65 | 315 | 130 | – | 125 | 85 | 145 | 185 | 4.18 | 16 | 12 |
| 80 | 370 | 155 | – | 125 | 100 | 160 | 200 | 4.18 | 16 | 12 |
| 100 | 480 | 200 | – | 140 | 130 | 180 | 220 | 8.18 | 18 | 14,5 |
| 125 | 685 | 275 | – | 140 | 185 | 210 | 250 | 8.18 | 20 | 14,5 |
| 150 | 890 | 365 | – | 140 | 240 | 240 | 285 | 8.22 | 20 | 14,5 |
| 200 | 1110 | 460 | – | 160 | 300 | 295 | 340 | 8.22 | 22 | 16 |
| 250 | 1110 | 460 | – | 160 | 300 | 350 | 395 | 12.22 | 24 | 16 |

## WINEL STORM VALVES TYPE SV 53

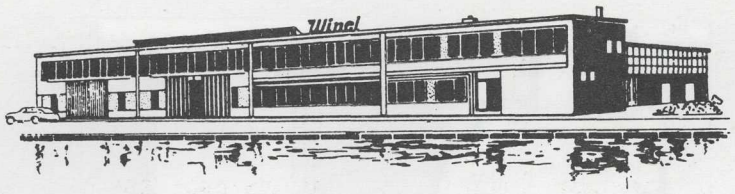


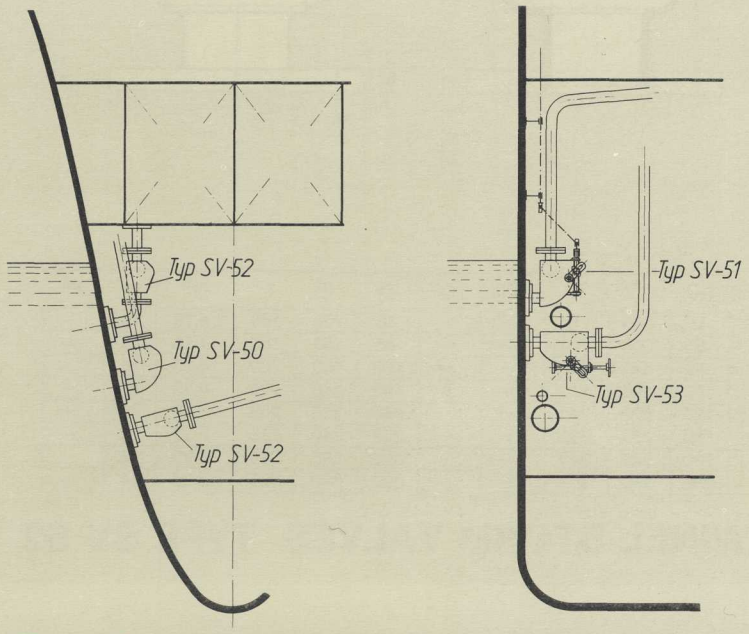


## Possible alternatives of installation

WINEL STORM VALVES are used in the shipbuilding industry.
They should be fitted about 300 mm below the water-line.
They prevent the ingress of water while permitting out-flow.
We offer the normal storm-valve type SV 50-52 and also type SV 51-53 fitted with a lever to hold the valve closed.
Both types are of welded construction and contain a float-ball.
The upper flange is connected to the tank outlet pipe.
The other flange is connected to the piping through ship's shell.
The conical seat of the float-ball is to be found within the valve below the upper flange.
External waterpressure floats the ball to its seat thereby closing the valve and preventing the entry of water.
The float-ball is guided to its seat automatically by the water pressure.
There is free discharge from the storage tank.
Storm valves can be fitted with an external lever to hold the valve closed by pressing the ball into its seat. When the lever is released, the tank can empty itself.

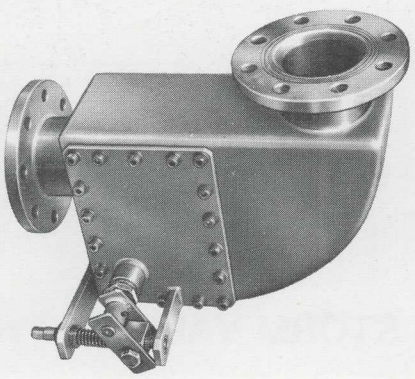

# WINEL

# FLOAT-BALLS

## honestly, the best!

Winel float-balls are now produced in series because after years of research:

- Winel float-balls are made to resist oil, petrol, seawater, etc.;
- Winel float-balls are made of a special P.V.C. composition;
- Winel float-balls are nearest to a real sphere;
- Winel float-balls have been tested and approved by all Classification Societies known to us;
- Winel float-balls are used in the well-known Winel tank vent check valve (air pipe top) on board of more than 8,000 ships, say 300,000 balls;
- Winel float-balls are available from stock in the mm diameters 85 - 100 - 115 - 150 - 185 - 240 - 300 - 340;
- Winel float-balls can be supplied in other diameters - prices on application.

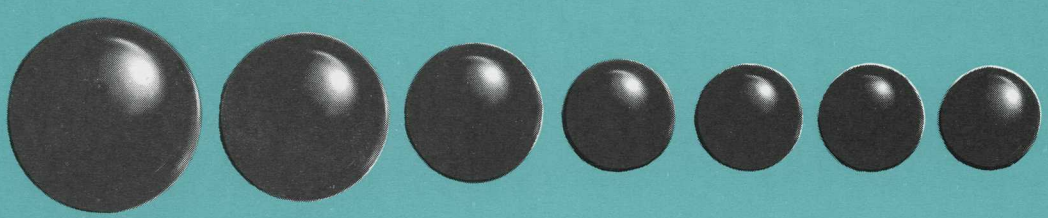

"Milos"

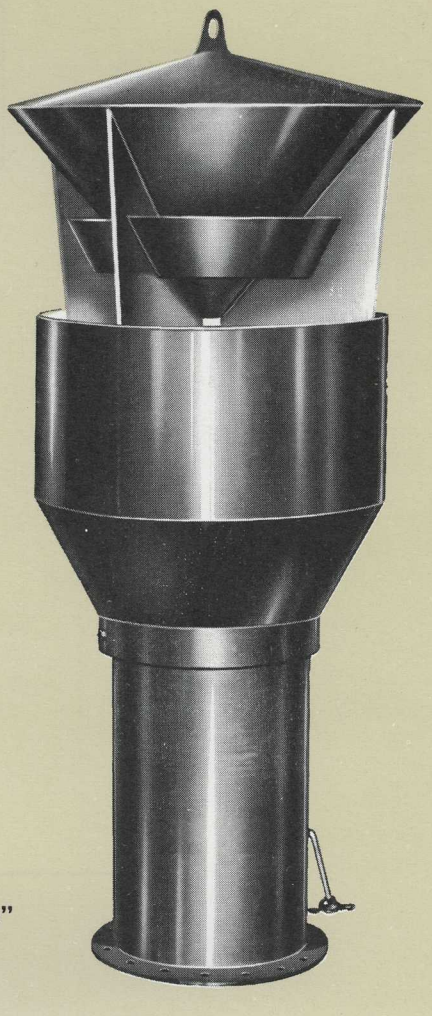

"Brigitte"

# Winel ventilation cowls for ships' holds.

## GENERAL TECHNICAL INFORMATION:

WINEL VENTILATION COWLS are universally applicable so that all ventilation problems throughout the ship are solved.

Winel designed the cowls in such a way as to be independent of wind direction.

Extensive and intensive trials show that seawater is drained away so quickly that none enters the hold. In extremely bad weather ventilation can, as an extra precaution, be closed by simply pulling a lever. This is usefull too in dust/sand storms.

Ships equipped with Winel ventilation cowls do not require so-called rat-screens as it is virtually impossible for rats to enter the cowls.

Winel cowls are fabricated from steel plate and galvanized thereafter. They are easily fitted and little maintenance is required.

Winel cowls are so designed as not to hold water and will blow or suck themselves dry.

Winel ventilation cowls are internationally appreciated. Owners and builders throughout the world are satisfied users and keep repeating for other ships.

Winel ventilation cowls, like the Winel tank vent check valves, have been approved by every Classication Society known to us.

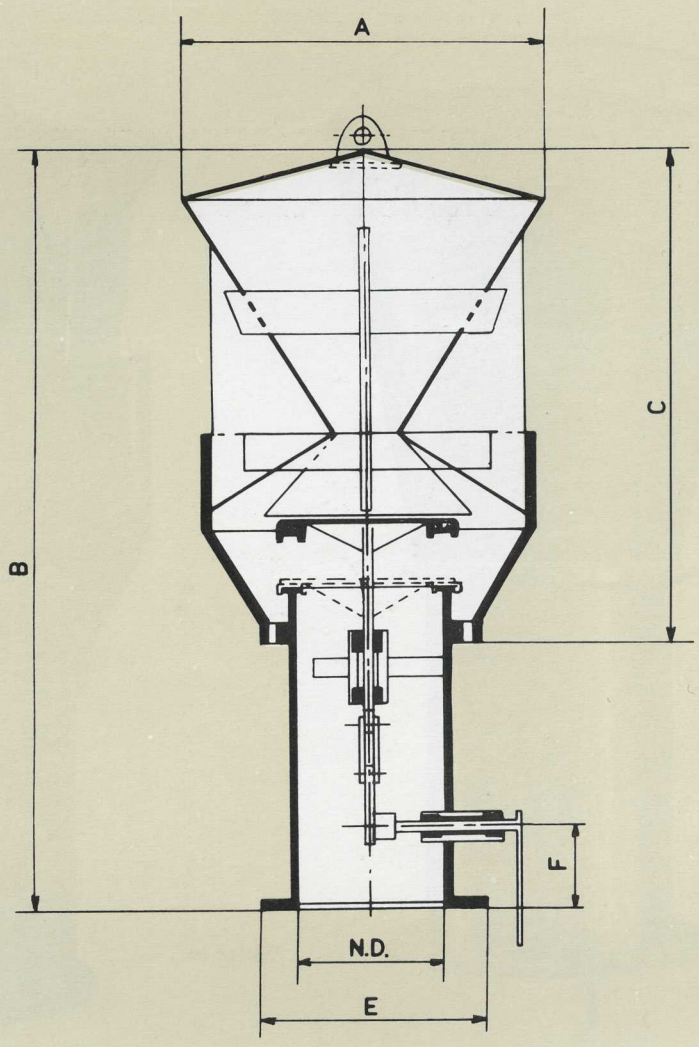


# Winel ventilation cowls for ships' holds.

| ND | 150 | 200 | 250 | 300 | 350 | 400 | 500 | 600 | 700 | 800 | 900 |
|---|---|---|---|---|---|---|---|---|---|---|---|
| A | 450 | 500 | 600 | 650 | 700 | 800 | 1000 | 1200 | 1400 | 1600 | 1800 |
| B | 1075 | 1125 | 1315 | 1315 | 1425 | 1575 | 2200 | 2480 | 2890 | 3000 | 3250 |
| C | 550 | 600 | 790 | 790 | 900 | 1050 | 1300 | 1580 | 1840 | 1950 | 2200 |
| E | 260 | 310 | 360 | 410 | 460 | 510 | 615 | 715 | 815 | 915 | 1015 |
| F | 170 | 170 | 170 | 170 | 170 | 180 | 220 | 250 | 300 | 360 | 380 |

**Brigitte inlet ventilation cowl No. 1 with or without air-closure.**
**Galvanized after fabrication.**

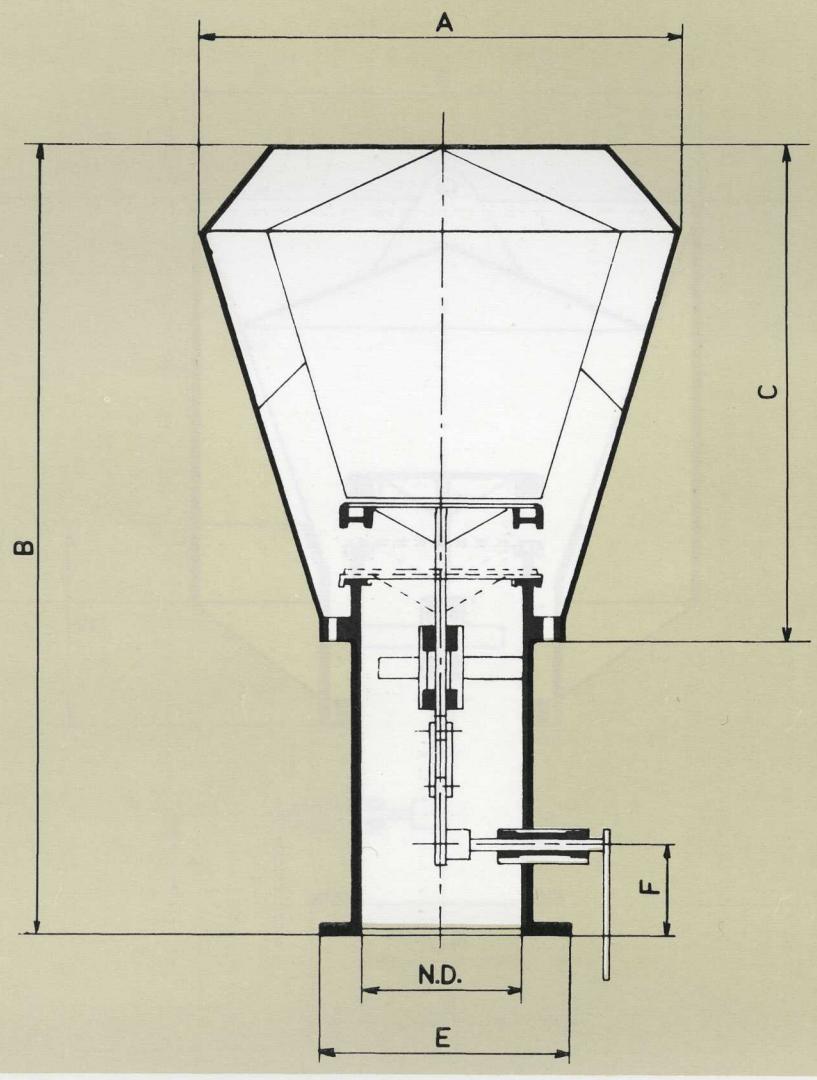


# Winel ventilation cowls for ships' holds.

| ND | 150 | 200 | 250 | 300 | 350 | 400 | 500 | 600 | 700 | 800 | 900 |
|---|---|---|---|---|---|---|---|---|---|---|---|
| A | 400 | 450 | 550 | 550 | 650 | 720 | 915 | 1200 | 1300 | 1400 | 1650 |
| B | 975 | 1025 | 1175 | 1175 | 1275 | 1385 | 1980 | 2100 | 2560 | 2750 | 3000 |
| C | 450 | 500 | 650 | 650 | 750 | 860 | 1080 | 1200 | 1510 | 1700 | 1950 |
| E | 260 | 310 | 360 | 410 | 460 | 510 | 615 | 715 | 815 | 915 | 1015 |
| F | 170 | 170 | 170 | 170 | 170 | 180 | 220 | 250 | 300 | 360 | 380 |

**Milos outlet ventilation cowl No. 2 with or without air-closure.**
**Galvanized after fabrication.**

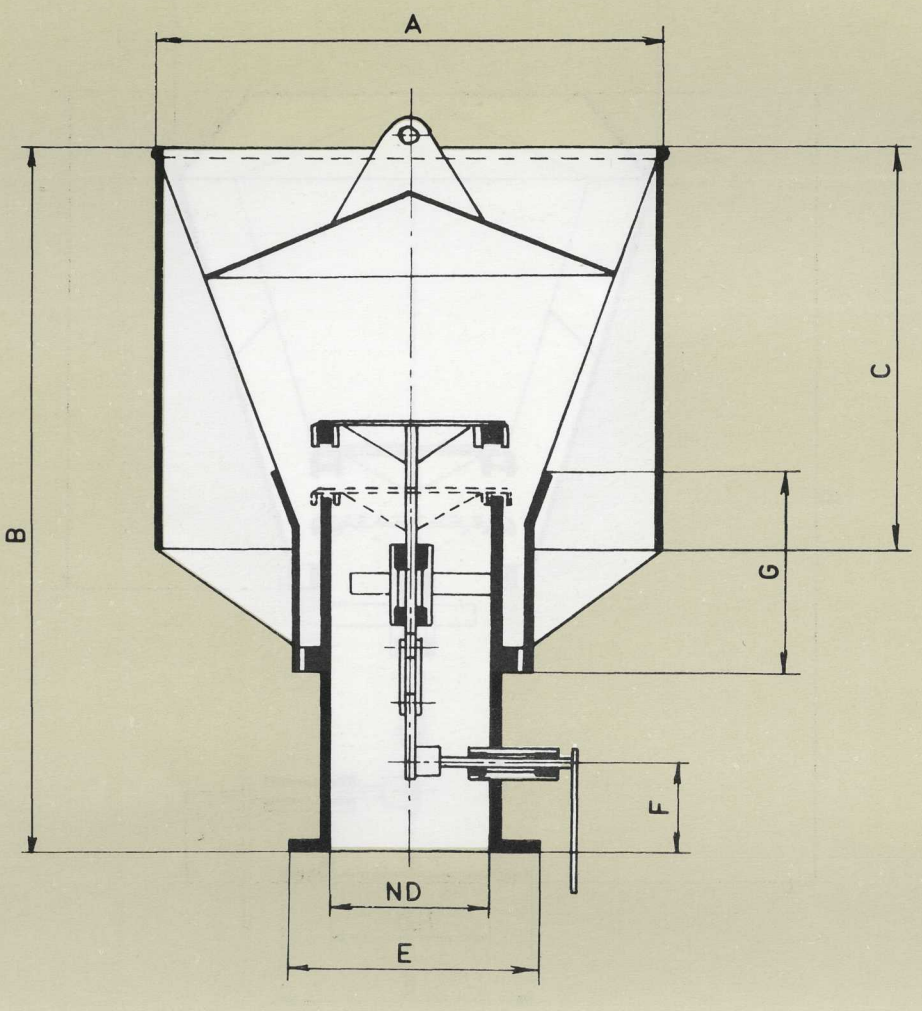


# Winel ventilation cowls for ships' holds.

| ND | 150 | 200 | 250 | 300 | 350 | 400 | 500 | 600 | 700 | 800 | 900 |
|---|---|---|---|---|---|---|---|---|---|---|---|
| A | 260 | 340 | 430 | 500 | 580 | 660 | 840 | 990 | 1160 | 1340 | 1500 |
| B | 710 | 750 | 775 | 830 | 875 | 915 | 1400 | 1480 | 1755 | 1880 | 1920 |
| C | 165 | 220 | 275 | 330 | 385 | 440 | 550 | 660 | 770 | 880 | 990 |
| E | 260 | 310 | 360 | 410 | 460 | 510 | 615 | 715 | 815 | 915 | 1015 |
| F | 170 | 170 | 170 | 170 | 170 | 180 | 220 | 250 | 300 | 360 | 380 |
| G | 105 | 135 | 165 | 200 | 220 | 250 | 310 | 360 | 425 | 495 | 540 |

**Outlet ventilation cowl No. 3 with air-closure.**
**Galvanized after fabrication.**

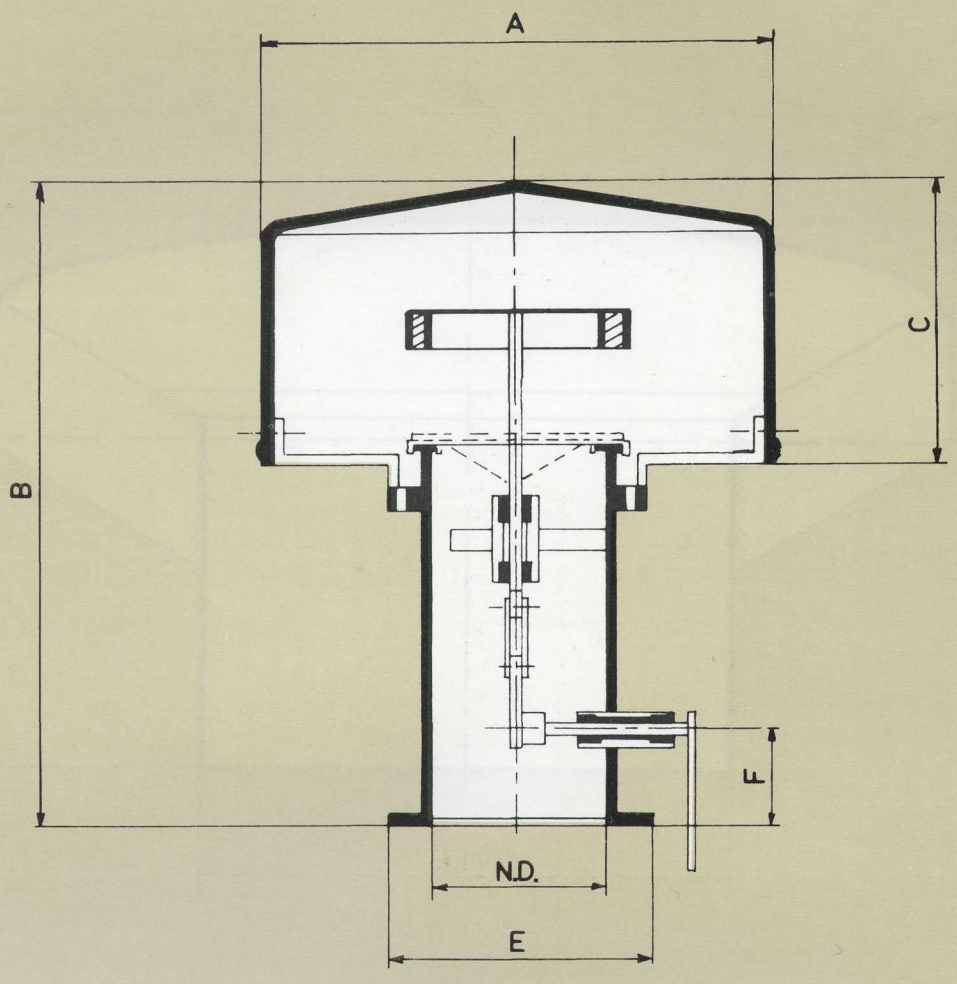


# Winel ventilation cowls for ships' holds.

| ND | 150 | 200 | 250 | 300 | 350 | 400 | 500 | 600 | 700 | 800 | 900 |
|---|---|---|---|---|---|---|---|---|---|---|---|
| A | 360 | 460 | 530 | 640 | 760 | 850 | 980 | 1100 | 1280 | 1440 | 1670 |
| B | 650 | 710 | 780 | 830 | 890 | 950 | 1470 | 1590 | 1670 | 2100 | 2190 |
| C | 200 | 260 | 330 | 380 | 440 | 500 | 620 | 700 | 780 | 850 | 940 |
| E | 260 | 310 | 360 | 410 | 460 | 510 | 615 | 715 | 815 | 915 | 1015 |
| F | 170 | 170 | 170 | 170 | 170 | 180 | 220 | 250 | 300 | 360 | 380 |

**Mushroom ventilation cowl No. 4 with or without air-closure.**
**Galvanized after fabrication.**

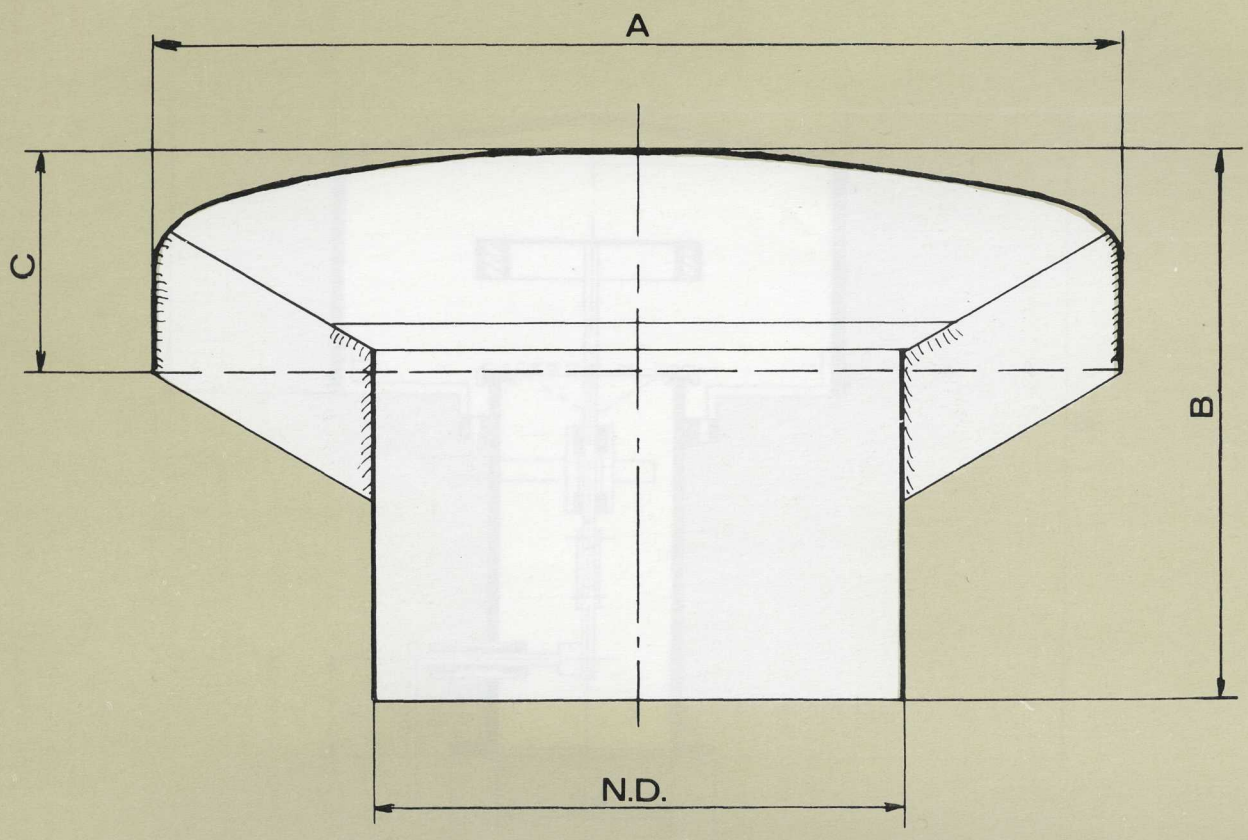


# Winel ventilation cowls for ships' holds.

| ND | 100 | 150 | 200 | 250 | 300 | 350 | 400 | 450 | 500 | 550 | 600 | 650 | 700 | 750 | 800 |
|---|---|---|---|---|---|---|---|---|---|---|---|---|---|---|---|
| A | 160 | 240 | 320 | 400 | 480 | 560 | 640 | 720 | 800 | 880 | 960 | 1040 | 1120 | 1200 | 1280 |
| B | 120 | 180 | 240 | 300 | 360 | 420 | 480 | 540 | 600 | 660 | 720 | 780 | 840 | 900 | 960 |
| C | 40 | 60 | 80 | 100 | 120 | 140 | 160 | 180 | 200 | 220 | 240 | 260 | 280 | 300 | 320 |

**Mushroom ventilator No. 5.**
**Galvanized after fabrication.**

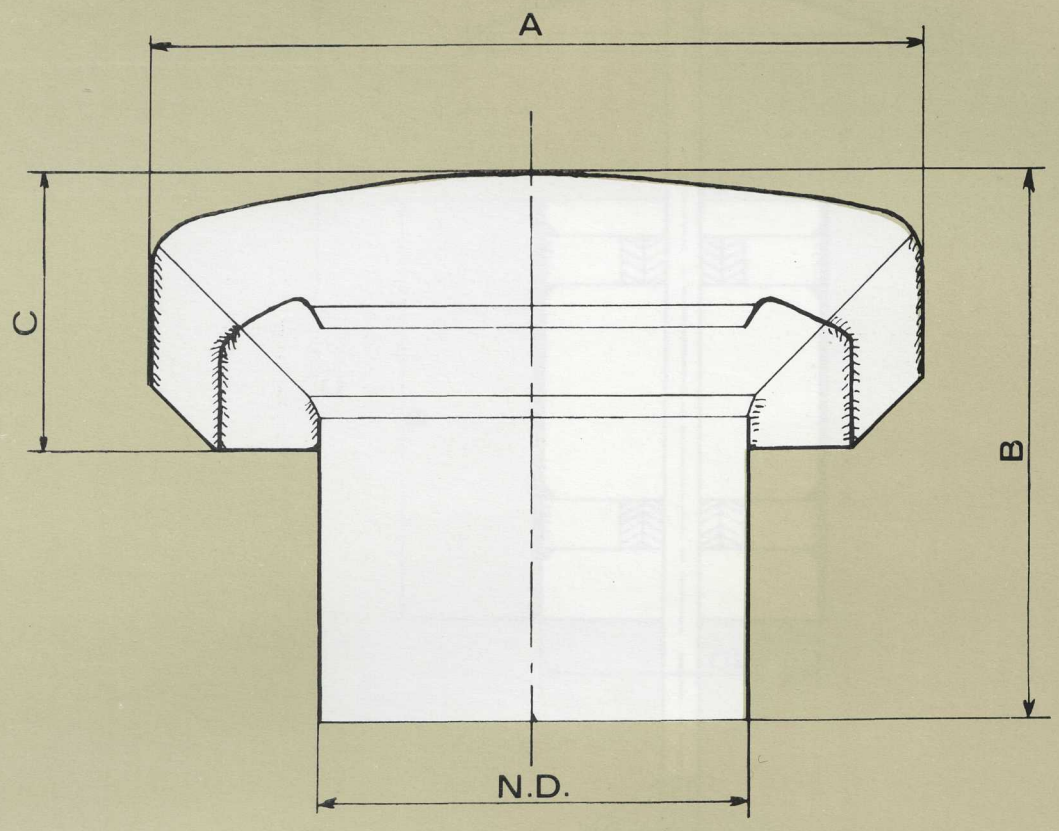


# Winel ventilation cowls for ships' holds.

| ND | 100 | 150 | 200 | 250 | 300 | 350 | 400 | 450 | 500 | 550 | 600 | 650 | 700 | 750 | 800 |
|---|---|---|---|---|---|---|---|---|---|---|---|---|---|---|---|
| A | 160 | 240 | 320 | 400 | 480 | 560 | 640 | 720 | 800 | 880 | 960 | 1040 | 1120 | 1200 | 1280 |
| B | 120 | 180 | 240 | 300 | 360 | 420 | 480 | 540 | 600 | 660 | 720 | 780 | 840 | 900 | 960 |
| C | 65 | 90 | 115 | 140 | 165 | 190 | 215 | 240 | 265 | 290 | 315 | 340 | 365 | 390 | 415 |

**Mushroom ventilator No. 6.**
**Galvanized after fabrication.**

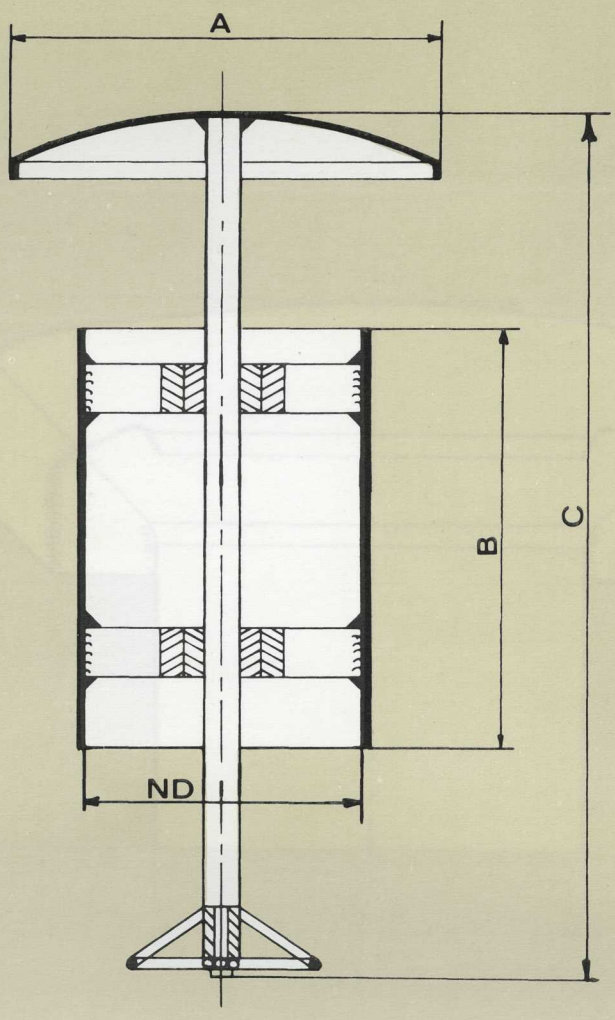


# Winel ventilation cowls for ships' holds.

| ND | 100 | 150 | 200 | 250 | 300 | 350 | 400 |
|---|---|---|---|---|---|---|---|
| A | 140 | 210 | 275 | 340 | 400 | 465 | 530 |
| B | 250 | 250 | 250 | 250 | 300 | 300 | 300 |
| C | 320 | 340 | 360 | 380 | 400 | 440 | 480 |

**Adjustable Mushroom ventilator No. 7.**
**Galvanized after fabrication.**

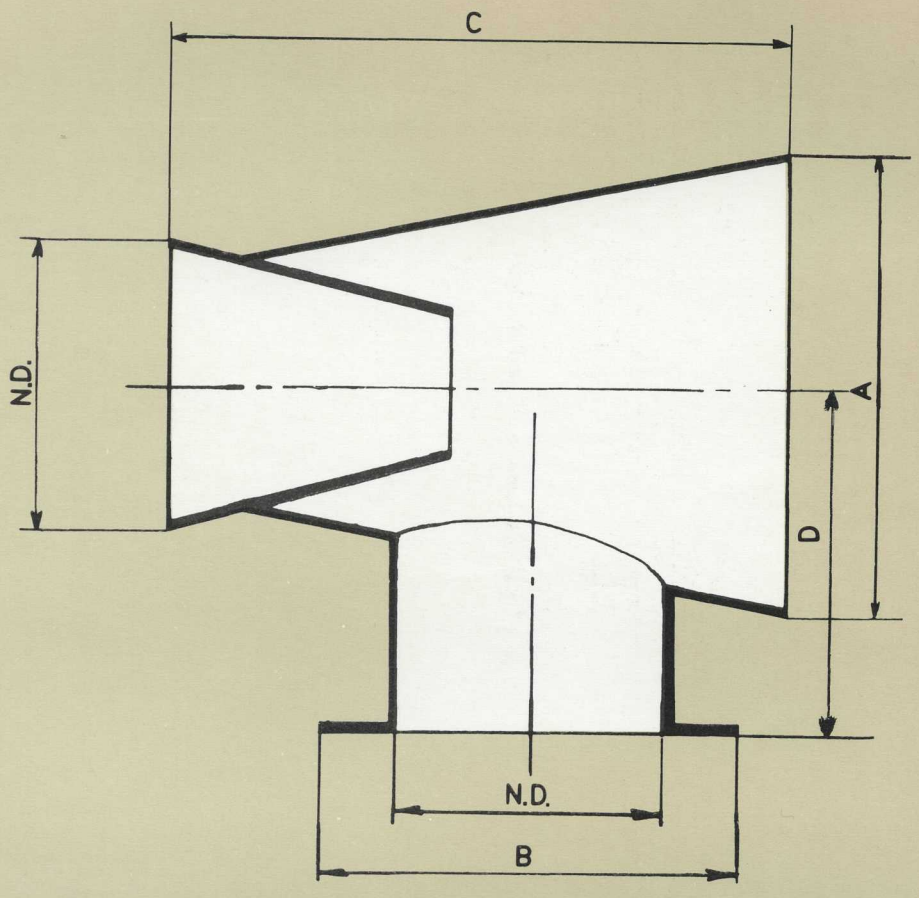


# Winel ventilation cowls for ships' holds.

| ND | 100 | 150 | 200 | 250 | 300 | 350 | 400 | 450 | 500 |
|---|---|---|---|---|---|---|---|---|---|
| A | 170 | 260 | 345 | 430 | 520 | 600 | 695 | 780 | 870 |
| B | 160 | 210 | 260 | 310 | 360 | 410 | 460 | 510 | 560 |
| C | 230 | 350 | 460 | 570 | 690 | 800 | 920 | 1030 | 1150 |
| D | 170 | 250 | 330 | 410 | 490 | 570 | 650 | 730 | 810 |

**Torpedo ventilation cowl No. 8.**
**Galvanized after fabrication.**

**WINEL OF AMERICA**

8304 WYATT ROAD

BROADVIEW HEIGHTS, OHIO 44147 U.S.A.

TELEPHONE: (216) 526-5484

TELETYPEWRITER: 810 427 9165

MACHINEFABRIEK EN HANDELMAATSCHAPPIJ

**"WINEL" B.V.**

P.O. BOX 70 – ASSEN – HOLLAND

TELEPHONE 05920–14644 TELEX 53275

Printed by Winel Netherlands