THE SYNTHESIS OF EXPONENTIALLY-TAPERED DISTRIBUTED RC NETWORKS REALIZING DRIVING-POINT IMMITTANCE FUNCTIONS

by

HENRY RONALD CHINN

F.R.M.T.C., Royal Melbourne Technical College, 1956,

B.E., University of New South Wales, 1960,

M.E., University of New South Wales, 1963.

A THESIS SUBMITTED IN PARTIAL FULFILMENT OF

THE REQUIREMENTS FOR THE DEGREE OF

DOCTOR OF PHILOSOPHY

in the Department of

Electrical Engineering

We accept this thesis as conforming to the

required standard

Research Supervisor .....

Members of the Committee ..

Head of the Department

Members of the Department
of Electrical Engineering
THE UNIVERSITY OF BRITISH COLUMBIA

DECEMBER, 1966

In presenting this thesis in partial fulfilment of the requirements for an advanced degree at the University of British Columbia, I agree that the Library shall make it freely available for reference and study. I further agree that permission for extensive copying of this thesis for scholarly purposes may be granted by the Head of my Department or by his representatives. It is understood that copying or publication of this thesis for financial gain shall not be allowed without my written permission.

Department of Electrical Engineering

The University of British Columbia
Vancouver 8, Canada

Date February 7, 1967

ABSTRACT

In this dissertation, positive-real conformal transformations are used to develop synthesis procedures for the realization of driving-point immittance functions by exponentially-tapered distributed RC networks. These synthesis procedures include the realization by uniform distributed RC networks as a special case.

New equivalent circuits are developed for the exponentially-tapered distributed RC network. These differ from the equivalent circuits for the uniform distributed RC network through the presence of positive and negative lumped elements and ideal transformers.

It is found that the lumped elements must be eliminated from the equivalent circuits developed for exponentially-tapered distributed RC networks before it is possible to apply a positive-real conformal transformation to change the synthesis problem into a lumped LC synthesis problem. Hence, through Richards' Theorem, a cascade synthesis procedure for the realization of driving-point immittance functions is developed. Various cascade network realizations are presented. Additional distributed RC sections are used in these realizations to compensate for the lumped elements in the equivalent circuits.

Before the synthesis procedure can be applied, it is necessary to approximate any specified driving-point immittance function by a function that is realizable by one of the network configurations presented. A digital computer with plotting facilities is deemed necessary for this purpose.

TABLE OF CONTENTS

LIST OF ILLUSTRATIONS

Figure | Page

ACKNOWLEDGEMENTS

I wish to thank my research supervisor, Dr. A.D. Moore, for his encouragement, guidance, interest and suggestions during the course of the research work and the writing of this dissertation. I also wish to thank Dr. L. Young for his interest and helpful discussions on the practical realization of thin-film networks.

Thanks are due to my colleagues for helpful discussions and suggestions, particularly with regard to digital computer programming.

Thanks are also due to Miss L. Blaine for typing this dissertation.

I gratefully acknowledge the financial assistance of the National Research Council of Canada through its grant A-68 for 1963-64 and its award of a Studentship for 1965-67.

1. INTRODUCTION

1.1 Review of Previous Work

Integrated circuits and thin-film networks are being increasingly used because of their smaller physical dimensions and greater reliability. The realization of passive distributed-parameter networks in the form of thin-film structures is currently under investigation by circuit theorists.

Linear, passive, time-invariant, distributed-parameter networks, hereafter referred to simply as distributed-parameter networks, are characterized by immittance functions that are not rational in the complex frequency s. Various approaches have been used to realize distributed-parameter networks to satisfy network specifications[1]. These approaches can be divided into two groups.

The first group of methods include those[2, 3] in which a network approximating the specified response is selected on the basis of response curves obtained by analysis, as well as those which are based upon approximations, such as the use of dominant poles[4]. Such methods are neither as elegant nor as general of application as those of the second group.

The second group of methods are synthesis methods, because the distributed-parameter network is exactly and systematically realized after the specified network function is approximated by a suitable network function. These synthesis methods can be further divided into two subgroups.

In one of these subgroups, configurations of distributed-

parameter networks which have immittance functions that are rational in the complex frequency s are found, so that the usual lumped-parameter synthesis procedures can be applied. Heizer[5-10] and Hesselberth[11] have reported various configurations of thin-film distributed RC networks that will give rational immittance functions.

The other subgroup of synthesis methods uses positive-real (p-r) conformal transformations to change the distributed-parameter network problems into lumped-parameter network problems. The usual lumped-parameter synthesis procedures can then be applied and the distributed-parameter networks realized. This synthesis approach is depicted by Fig. 1.1. In this approach, the distributed-parameter network function must first be obtained, i.e., the specified network function must be approximated by an irrational function that satisfies the realizability conditions. Wyndrum[12-15] and O'Shea[16] have used this technique in their synthesis procedures. Wyndrum used the p-r conformal transformation $w = \tanh \sqrt{sRC}\,\ell$ to change the distributed RC network function into a lumped LC network function. He has proposed a cascade synthesis procedure to realize driving-point (d-p) immittance functions by uniform (untapered) distributed RC (hereafter abbreviated to uniform $\overline{RC}$[12]) networks. O'Shea used the p-r conformal transformation $w = \cosh \sqrt{sRC}\,\ell$ to change the distributed RC network function into a lumped RL network function, and proposed Foster-type realizations (i.e., realizations based upon partial-fraction expansions) of d-p immittance functions

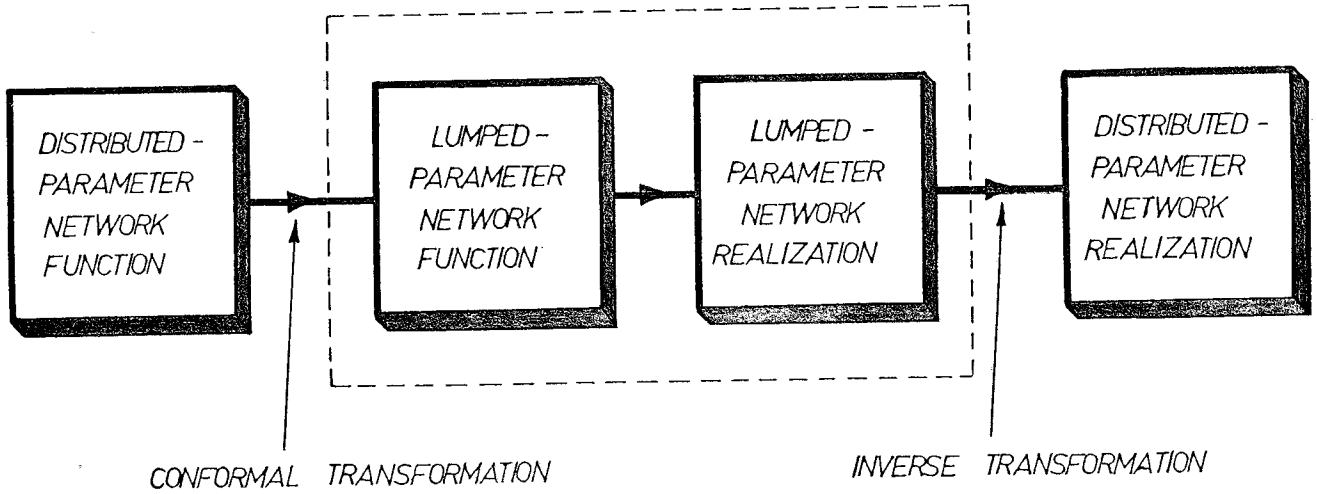

Fig. 1.1 - Synthesis Procedure Using Positive-Real Conformal Transformation.

by uniform $\overline{RC}$ networks. However, physical realization of these networks is not as practical as the cascaded uniform $\overline{RC}$ networks obtained by Wyndrum's synthesis procedure.

1.2 Proposed Synthesis Procedures

Wyndrum and O'Shea used the uniform $\overline{RC}$ section of Fig. 1.2 as the basic network element in their synthesis procedures.

It has been reported[13] that tapered thin-film passive $\overline{RC}$ networks may have useful properties not possessed by uniform $\overline{RC}$ networks. For ease of fabrication, distributed passive RC structures consist of conductive, dielectric and resistive films of uniform composition and constant thickness. The effective width at any point of a tapered transmission line will be assumed to be that of the resistive film and that modulation of this width with respect to the axial coordinate produces resistance and capacitance taper functions which are reciprocal. Under these constraints, solutions of the differential equations of nonuniform $\overline{RC}$ networks are known for some taper functions such as the linear[17] and exponential[17] tapers. The exponentially-tapered distributed RC (exponential $\overline{RC}$[12]) section of Fig. 1.3, with the additional degree of freedom provided by its taper parameter, may have characteristics not obtainable by a uniform $\overline{RC}$ section. The exponential $\overline{RC}$ section includes the uniform $\overline{RC}$ section as a special case. Furthermore, Hellstrom[17] and Schwartz[18] have shown other distributed RC structures which are equivalent to the exponential $\overline{RC}$ section insofar as terminal characteristics are concerned. These equivalent structures do not constrain the

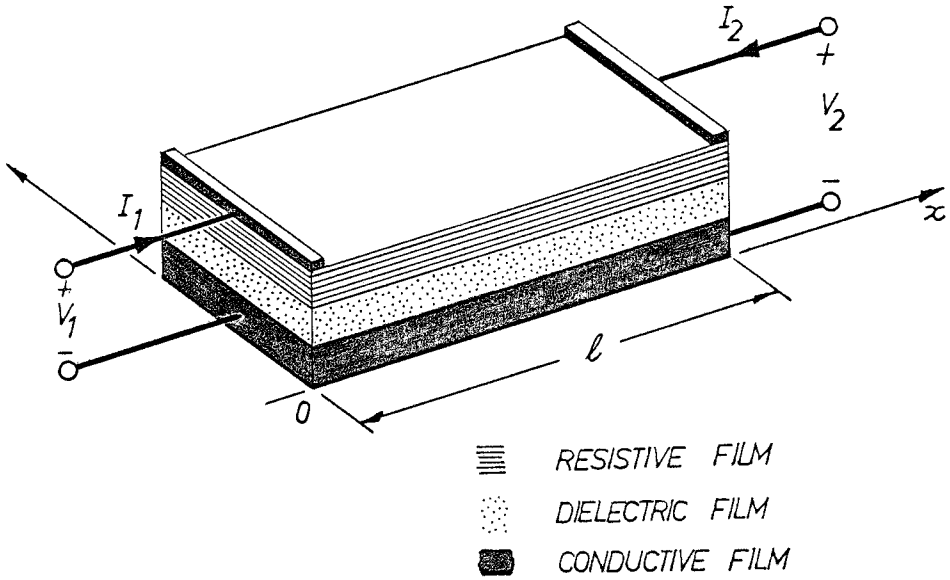

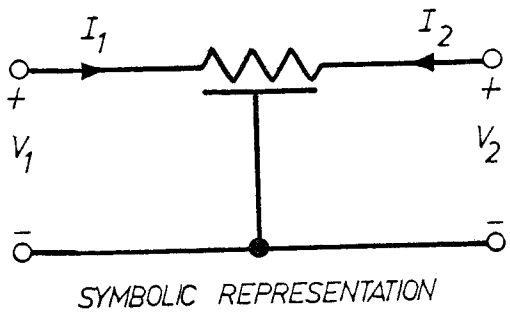

Fig. 1.2 - The Uniform $\overline{RC}$ Section.

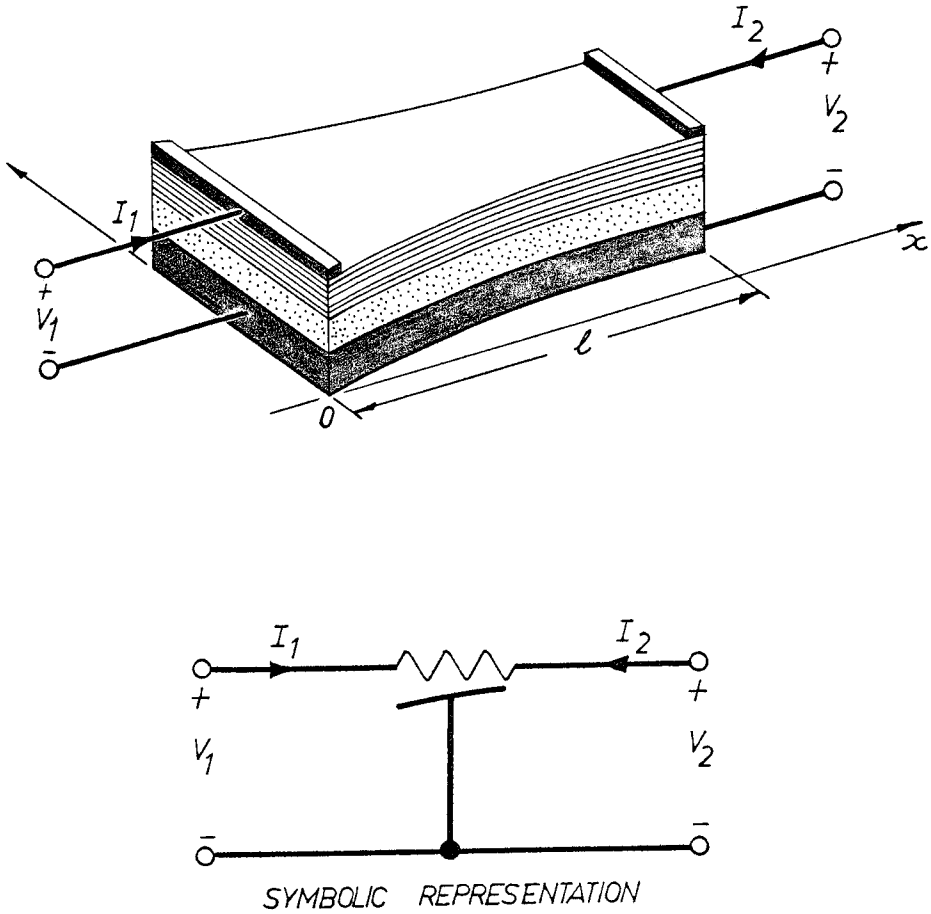

Fig. 1.3 - The Exponential RC Section.

resistance and capacitance functions to vary inversely.

A simple extension of Wyndrum's synthesis procedure for the realization of d-p immittance functions by uniform $\overline{RC}$ networks to the case of exponential $\overline{RC}$ networks would result from the p-r conformal transformation $w = \tanh \sqrt{k^2 + sRC}\, \ell$ instead of $w = \tanh \sqrt{sRC}\, \ell$. However, this is inadequate for the development of a synthesis procedure using exponential $\overline{RC}$ networks.

In this dissertation, it will be shown how Wyndrum's synthesis procedure can be extended to the realization of d-p immittance functions by exponential $\overline{RC}$ networks. Certain constraints must be satisfied. These constraints do not apply when the taper constants of the exponential $\overline{RC}$ sections become zero and the synthesis procedure reduces to Wyndrum's procedure for uniform $\overline{RC}$ sections.

2. THE CHARACTERISTICS OF UNIFORM AND EXPONENTIAL $\overline{RC}$ SECTIONS, AND A SUMMARY OF WYNDRUM'S SYNTHESIS PROCEDURE

2.1 Introduction

The characteristics of uniform and exponential $\overline{RC}$ sections will be discussed in this chapter.

The two-port parameters of the uniform $\overline{RC}$ section and of the exponential $\overline{RC}$ section have been derived previously[12,13, 19, 20] but will be presented here for completeness. Series inductance and shunt conductance will be assumed to be present to make the analysis more general.

To show how it can be extended to the realization of d-p immittance functions by exponential $\overline{RC}$ networks, Wyndrum's procedure for the realization of d-p immittance functions by uniform $\overline{RC}$ networks will be presented.

2.2 The Two-Port Parameters of the Uniform $\overline{RC}$ Section[12, 13]

Consider the uniform $\overline{RC}$ section of length ℓ shown in Fig. 1.2. The section in thin-film form consists of conductive, dielectric and resistive layers. We have

$$Z(x) \triangleq R + sL,$$

$$Y(x) \triangleq G + sC,$$

$R \triangleq$ series resistance/unit length at $x = 0$,

$L \triangleq$ series inductance/unit length at $x = 0$,

$G \triangleq$ shunt conductance/unit length at $x = 0$,

$C \triangleq$ shunt capacitance/unit length at $x = 0$,

$x \triangleq$ distance along the section,

and $s \triangleq$ complex frequency. (2.1)

The series inductance of thin-film $\overline{RC}$ networks is negligibly small but is included in the analysis for completeness. Because it is assumed that the dielectric film is lossy, shunt conductance is included.

By considering an elemental length of line, we can derive the telegrapher's equations

$$\frac{dV}{dx} = -Z(x)I$$

$$\frac{dI}{dx} = -Y(x)V \tag{2.2}$$

which yield the Sturm-Liouville equations

$$\frac{d^2V}{dx^2} - \frac{1}{Z}\frac{dZ}{dx}\frac{dV}{dx} - ZYV = 0$$

$$\frac{d^2I}{dx^2} - \frac{1}{Y}\frac{dY}{dx}\frac{dI}{dx} - YZI = 0 \tag{2.3}$$

For the special case of the uniform (untapered) line, where $\frac{dZ}{dx} = 0$ and $\frac{dY}{dx} = 0$, these equations become

$$\frac{d^2V}{dx^2} - (R+sL)(G+sC)V = 0$$

$$\frac{d^2I}{dx^2} - (G+sC)(R+sL)I = 0 \tag{2.4}$$

The solutions of Equations (2.4) are

$$V = A_V e^{\gamma x} + B_V e^{-\gamma x}$$

$$I = A_i \, e^{-\gamma x} + B_i \, e^{\gamma x} \tag{2.5}$$

where A_v, B_v, A_i and B_i are functions related to the boundary conditions,

and $$\gamma \triangleq \sqrt{(R+sL)(G+sC)} \tag{2.6}$$

$\triangleq$ the propagation function of the uniform $\overline{RC}$ section.

But, from Equation (2.2),

$$I = -\frac{\gamma}{R+sL} A_v \, e^{\gamma x} + \frac{\gamma}{R+sL} B_v \, e^{-\gamma x} \tag{2.7}$$

i.e., $$A_i = \frac{\gamma}{R+sL} B_v$$

and $$B_i = \frac{-\gamma}{R+sL} A_v \tag{2.8}$$

The boundary conditions are, with reference to Fig. 1.2,

$$V = V_1 \text{ and } I = I_1 \text{ at } x = 0,$$

$$V = V_2 \text{ and } I = -I_2 \text{ at } x = \ell.$$

Hence we obtain

$$A_v = \frac{R+sL}{\gamma} \frac{e^{-\gamma\ell} I_1 + I_2}{e^{\gamma\ell} - e^{-\gamma\ell}}$$

$$B_v = \frac{R+sL}{\gamma} \frac{e^{\gamma\ell} I_1 + I_2}{e^{\gamma\ell} - e^{-\gamma\ell}} \tag{2.9}$$

Therefore, $$V_1 = \frac{\gamma}{G+sC} \coth \gamma\ell \; I_1 + \frac{\gamma}{G+sC} \operatorname{csch} \gamma\ell \; I_2$$

$$V_2 = \frac{\gamma}{G+sC} \operatorname{csch} \gamma\ell \; I_1 + \frac{\gamma}{G+sC} \coth \gamma\ell \; I_2 \tag{2.10}$$

Thus, the open-circuit impedance matrix is

$$[z] = \begin{bmatrix} \frac{\gamma}{G+sC} \coth \gamma\ell & \frac{\gamma}{G+sC} \operatorname{csch} \gamma\ell \\ \frac{\gamma}{G+sC} \operatorname{csch} \gamma\ell & \frac{\gamma}{G+sC} \coth \gamma\ell \end{bmatrix} \tag{2.11}$$

and the short-circuit admittance matrix is

$$[y] = \begin{bmatrix} \frac{\gamma}{R+sL} \coth \gamma\ell & \frac{-\gamma}{R+sL} \operatorname{csch} \gamma\ell \\ \frac{-\gamma}{R+sL} \operatorname{csch} \gamma\ell & \frac{\gamma}{R+sL} \coth \gamma\ell \end{bmatrix} \tag{2.12}$$

The commonly used equivalent circuits[21], derived from the parameter matrices (2.11) and (2.12), are shown in Fig. 2.1.

2.3 Cascaded Uniform $\overline{RC}$ Sections

Since Wyndrum's synthesis procedure uses cascaded uniform $\overline{RC}$ sections, the d-p immittance functions of cascaded sections will be derived.

Consider the cascade of $\overline{RC}$ sections shown in Fig. 2.2. For the ith section, the input impedance

$$Z_i(s) = (z_{11})_i - \frac{[(z_{12})_i]^2}{(z_{22})_i + Z_{i+1}(s)} \tag{2.13}$$

where $(z_{11})_i$, $(z_{12})_i$ and $(z_{22})_i$ are the open-circuit impedance parameters of the ith section and $Z_{i+1}(s)$ is the input impedance of the $(i+1)^{th}$ section.

Substituting from Equation (2.11), we therefore have, for a cascade of uniform $\overline{RC}$ sections,

$$Z_i(s) = \frac{(R_i+sL_i) + \gamma_i \coth \gamma_i \ell_i \; Z_{i+1}(s)}{\gamma_i \coth \gamma_i \ell_i + (G_i+sC_i) \; Z_{i+1}(s)}$$

$$= \frac{\gamma_i}{G_i+sC_i} \; \frac{\tanh \gamma_i \ell_i + \frac{G_i+sC_i}{\gamma_i} Z_{i+1}(s)}{1 + \frac{G_i+sC_i}{\gamma_i} Z_{i+1}(s) \tanh \gamma_i \ell_i} \tag{2.14}$$

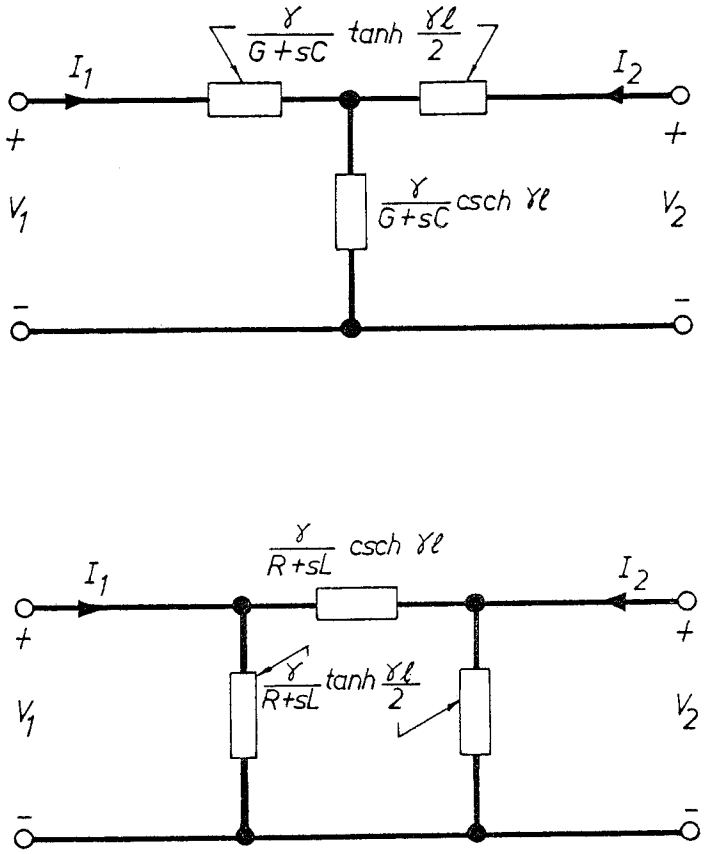

Fig. 2.1 - Equivalent Circuits of the Uniform $\overline{RC}$ Section.

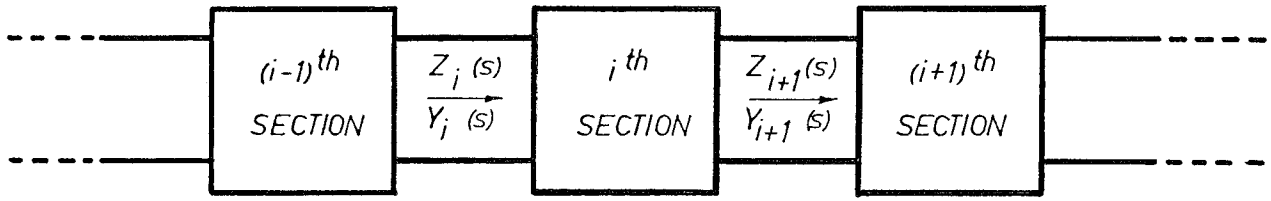

Fig. 2.2 - Cascade of $\overline{RC}$ Sections.

where $\gamma_i \triangleq \sqrt{(R_i+sL_i)(G_i+sC_i)}$ (2.15)

$\triangleq$ the propagation function of the ith section,

and R_i, L_i, G_i, C_i, ℓ_i are the parameters of the ith section.

Similarly, the input admittance at the ith section of an $\overline{RC}$ cascade is

$$Y_i(s) = \frac{1}{Z_i(s)}$$

or

$$Y_i(s) = (y_{11})_i - \frac{[(y_{12})_i]^2}{(y_{22})_i + Y_{i+1}(s)} \tag{2.16}$$

where $(y_{11})_i$, $(y_{12})_i$ and $(y_{22})_i$ are the short-circuit parameters of the ith section, and $Y_{i+1}(s)$ is the input admittance of the $(i+1)^{th}$ section.

Therefore, for a cascade of uniform $\overline{RC}$ sections, from Equation (2.12),

$$Y_i(s) = \frac{(G_i+sC_i) + \gamma_i \coth \gamma_i \ell_i \, Y_{i+1}(s)}{\gamma_i \coth \gamma_i \ell_i + (R_i+sL_i)\, Y_{i+1}(s)}$$

$$= \frac{\gamma_i}{R_i+sL_i} \frac{\tanh \gamma_i \ell_i + \frac{R_i+sL_i}{\gamma_i} Y_{i+1}(s)}{1 + \frac{R_i+sL_i}{\gamma_i} Y_{i+1}(s) \tanh \gamma_i \ell_i} \tag{2.17}$$

2.4 Wyndrum's Synthesis Procedure[12-15]

2.4.1 Realizability Conditions

A d-p immittance function $F(s)$ can be realized by a network of uniform $\overline{RC}$ sections, under the p-r conformal transformation[22]

$$w = \tanh \gamma \ell \tag{2.18}$$

if and only if F(s) can be expressed as

$$F(s) = K \frac{\gamma\ell}{g(s)} \frac{(e^{2\gamma\ell}+1)^{2(m-p)+1}}{(e^{2\gamma\ell}-1)} \frac{\prod_{j=1}^{p}(e^{4\gamma\ell}+N_j e^{2\gamma\ell}+1)}{\prod_{j=1}^{m}(e^{4\gamma\ell}+D_j e^{2\gamma\ell}+1)} \tag{2.19}$$

where K is a real positive constant,

γ is defined by Equation (2.6),

$\gamma\ell \triangleq \gamma_i \ell_i$ since the p-r conformal transformation (2.18) applies to all sections of the network,

$|N_j|$, $|D_j| < 2$ to ensure that the immittance function under the transformation (2.18) is an LC function,

$D_j > N_j$ and only one coefficient in the set of N_j and D_j may be zero to ensure that the poles and zeros of the transformed immittance function interlace,

$m = p$ or $m = p-1$ to satisfy the degree requirements of the transformed LC immittance function,

and g(s) depends upon the nature of F(s), i.e., whether it is an impedance function or an admittance function, and upon the values of the series inductances and shunt conductances of the $\overline{RC}$ sections.

In this dissertation, we shall be concerned with four special cases, namely,

I. If F(s) is an <u>admittance</u> function and series <u>inductance</u> is <u>not negligible</u>,

then $g(s) = 1 + s\tau_p$ (2.20)

where $\tau_p \triangleq \frac{L_i}{R_i} \triangleq \frac{L}{R}$

II. If $F(s)$ is an <u>admittance</u> function and series <u>inductance</u> is <u>negligible</u>,

then $g(s) = 1$ (2.21)

III. If $F(s)$ is an <u>impedance</u> function and shunt <u>conductance</u> is <u>not negligible</u>,

then $g(s) = s + \frac{1}{\tau_s}$ (2.22)

where $\tau_s \triangleq \frac{C_i}{G_i} \triangleq \frac{C}{G}$

IV. If $F(s)$ is an <u>impedance</u> function and shunt <u>conductance</u> is <u>negligible</u>,

then $g(s) = s$ (2.23)

The polynomial factors that appear in the immittance function $F(s)$ of Equation (2.19) are referred to as exponential polynomials in this dissertation.

2.4.2 Positive-Real Conformal Transformation

Under the p-r conformal transformation (2.18) and making use of Equations (2.20)-(2.23), the d-p immittance functions of Equations (2.14) and (2.17), when premultiplied by $\frac{g(s)}{\gamma\ell}$, become

$$f_i(w) \triangleq \frac{g(s)}{\gamma\ell} F_i(s)$$
$$= \frac{1}{\zeta_i} \frac{w + \zeta_i f_{i+1}(w)}{1 + w\zeta_i f_{i+1}(w)} \tag{2.24}$$

where $f_i(w)$ and $f_{i+1}(w)$ are d-p immittance functions of the complex variable w, and ζ_i depends upon the nature of $F_i(s)$ and $g(s)$. Thus, we have four special cases, namely,

I, II. If $F_i(s)$ is an <u>admittance</u> function and

$g(s)$ is given by Equation (2.20) or (2.21),

then $\zeta_i = R_i \ell_i$ (2.25)

III, IV. If $F_i(s)$ is an <u>impedance</u> function and $g(s)$ is given by Equation (2.22) or (2.23),

then $\zeta_i = C_i \ell_i$ (2.26)

It can be shown[12-15] that the function $f_i(w)$ of Equation (2.24) is a lumped LC d-p immittance function of the complex variable w.

Note that Equation (2.24) indicates a bilinear transformation between the immittance functions $f_i(w)$ and $f_{i+1}(w)$, so that Richards' Theorem may be applied.

2.4.3 Richards' Theorem[23, 24]

Richards' Theorem is useful in the development of a cascade synthesis procedure and may be stated as follows:

If $f_i(w)$ is a p-r function, and

$$f_{i+1}(w) = \beta \frac{\alpha f_i(w) - w\, f_i(\alpha)}{\alpha f_i(\alpha) - w\, f_i(w)} \tag{2.27}$$

where α, β are real positive constants, then $f_{i+1}(w)$ is also a p-r function.

Now consider the d-p immittance function $f_i(w)$ of Equation (2.24). We have

$$f_i(1) = \frac{1}{\zeta_i} \tag{2.28}$$

and

$$f_{i+1}(w) = \frac{1}{\zeta_i} \frac{f_i(w) - w \frac{1}{\zeta_i}}{1/\zeta_i - w\, f_i(w)}$$

$$= f_i(1) \frac{f_i(w) - w\, f_i(1)}{f_i(1) - w\, f_i(w)} \tag{2.29}$$

Since $f_i(w)$ is a p-r d-p immittance function, $f_{i+1}(w)$ is also a p-r d-p immittance function, by Richards' Theorem, with $\alpha = 1$ and $\beta = f_i(\alpha) = \frac{1}{\mathcal{S}_i}$. Since $f_i(w)$ is an LC immittance function, $f_{i+1}(w)$ is also an LC immittance function.

From Equation (2.29), it is apparent the numerator and denominator of $f_{i+1}(w)$ have a common factor. This factor is of the form $(1-w^2)$. Thus, $f_{i+1}(w)$ is of lower rank than $f_i(w)$ so that a cascade synthesis procedure can be formulated.

2.4.4 Synthesis Procedure

Given: $\mathcal{H}$, as specified by Equation (2.18), and $f_1(w)$, a d-p immittance function which satisfies the realizability conditions of Section 2.4.1.

Step 1: Calculate $f_1(1)$.

Hence $\frac{1}{\mathcal{S}_1} = f_1(1)$ (2.30)

where $\mathcal{S}_1$ is defined by Equation (2.25) or (2.26). The parameters of the first $\overline{RC}$ section can then be determined through Equations (2.15), and (2.20)-(2.23).

Step 2: From Equations (2.28)-(2.30), with $i = 1$, and cancelling the factor $(1-w^2)$ from the numerator and denominator, determine $f_{i+1}(w)$, i.e.,

$$f_{i+1}(w) = f_i(1)\,\frac{f_i(w) - w\,f_i(1)}{f_i(1) - w\,f_i(w)} \tag{2.31}$$

Step 3: Hence calculate $f_{i+1}(1)$

and $\frac{1}{\mathcal{S}_{i+1}} = f_{i+1}(1)$ (2.32)

where $\mathcal{S}_{i+1}$ is defined by Equation (2.25) or (2.26). The parameters of the second $\overline{RC}$ section can then be

determined from Equations (2.15), and (2.20)-(2.23).

Step 4: Repeat Steps 2 and 3 for $i = 2, 3, \ldots$, until $f_1(w)$ is completely realized.

Note that the last section in the cascade is open-circuited if $f_1(w)$ is an impedance function, and short-circuited if $f_1(w)$ is an admittance function.

2.5 The Two-Port Parameters of the Exponential $\overline{RC}$ Section[19, 20]

Consider the exponential $\overline{RC}$ section of length ℓ shown in Fig. 1.3.

For the exponential $\overline{RC}$ section,

$$Z(x) \triangleq (R+sL)\, e^{2kx}$$
$$Y(x) \triangleq (G+sC)\, e^{-2kx} \tag{2.33}$$

where k is the taper constant of the section and may be positive or negative (it is positive for the section of Fig. 1.3). Therefore, the Sturm-Liouville equations take the form

$$\frac{d^2V}{dx^2} - 2k\frac{dV}{dx} - (R+sL)(G+sC)V = 0$$

$$\frac{d^2I}{dx^2} + 2k\frac{dI}{dx} - (G+sC)(R+sL)I = 0 \tag{2.34}$$

with solutions

$$V = A_v\, e^{(k+\gamma)x} + B_v\, e^{(k-\gamma)x}$$

$$I = A_i\, e^{-(k+\gamma)x} + B_i\, e^{-(k-\gamma)x} \tag{2.35}$$

where A_v, B_v, A_i and B_i are functions related to the boundary conditions,

$$\gamma \triangleq \sqrt{k^2 + (R+sL)(G+sC)} \tag{2.36}$$

and $(\gamma+k)$ and $(\gamma-k)$ are the propagation functions of the exponential $\overline{RC}$ section. From Equation (2.2),

$$I = -\frac{k+\gamma}{R+sL} A_v e^{-(k-\gamma)x} - \frac{k-\gamma}{R+sL} B_v e^{-(k+\gamma)x} \tag{2.37}$$

i.e.,
$$A_i = -\frac{k-\gamma}{R+sL} B_v$$

and
$$B_i = -\frac{k+\gamma}{R+sL} A_v \tag{2.38}$$

The boundary conditions are, with reference to Fig. 1.3,

$$V = V_1 \text{ and } I = I_1 \text{ at } x = 0,$$

$$V = V_2 \text{ and } I = -I_2 \text{ at } x = \ell,$$

so that
$$A_v = \frac{R+sL}{k+\gamma} e^{k\ell} \frac{e^{-(k+\gamma)\ell} I_1 + I_2}{e^{\gamma\ell} - e^{-\gamma\ell}}$$

$$B_v = -\frac{R+sL}{k-\gamma} e^{k\ell} \frac{e^{-(k-\gamma)\ell} I_1 + I_2}{e^{\gamma\ell} - e^{-\gamma\ell}} \tag{2.39}$$

and
$$V_1 = \left[\frac{\gamma}{G+sC} \coth \gamma\ell + \frac{k}{G+sC}\right] I_1 + e^{k\ell} \frac{\gamma}{G+sC} \operatorname{csch} \gamma\ell \; I_2$$

$$V_2 = e^{k\ell} \frac{\gamma}{G+sC} \operatorname{csch} \gamma\ell \; I_1 + e^{2k\ell}\left[\frac{\gamma}{G+sC} \coth \gamma\ell - \frac{k}{G+sC}\right] I_2 \tag{2.40}$$

Thus, the open-circuit impedance matrix is

$$[z] = \begin{bmatrix} \left(\frac{\gamma}{G+sC} \coth \gamma\ell + \frac{k}{G+sC}\right) & e^{k\ell} \frac{\gamma}{G+sC} \operatorname{csch} \gamma\ell \\ e^{k\ell} \frac{\gamma}{G+sC} \operatorname{csch} \gamma\ell & e^{2k\ell}\left(\frac{\gamma}{G+sC} \coth \gamma\ell - \frac{k}{G+sC}\right) \end{bmatrix} \tag{2.41}$$

and the short-circuit admittance matrix is

$$[y] = \begin{bmatrix} \left(\frac{\gamma}{R+sL}\coth\gamma\ell - \frac{k}{R+sL}\right) & -e^{-k\ell}\frac{\gamma}{R+sL}\operatorname{csch}\gamma\ell \\ -e^{-k\ell}\frac{\gamma}{R+sL}\operatorname{csch}\gamma\ell & e^{-2k\ell}\left(\frac{\gamma}{R+sL}\coth\gamma\ell + \frac{k}{R+sL}\right) \end{bmatrix} \tag{2.42}$$

2.5.1 Equivalent Circuits

Equivalent circuits for the exponential $\overline{RC}$ section will now be derived.

Let the equivalent circuit consist of a T-configuration of impedances in cascade with an ideal transformer. By equating the open-circuit impedance matrix of this equivalent circuit to the open-circuit impedance matrix (2.41) for the exponential $\overline{RC}$ section, the impedances and the turns ratio of the ideal transformer in the equivalent circuit can be determined in terms of the parameters of the exponential $\overline{RC}$ section. The circuit is then as shown in Fig. 2.3.

Similarly, by assuming a π - configuration of impedances in cascade with an ideal transformer in the equivalent circuit and using the short-circuit admittance matrix (2.42), we obtain the equivalent circuit of Fig. 2.4. The equivalent circuit can also be obtained by applying the T-π transformation to the T-configuration of impedances in the equivalent circuit of Fig. 2.3.

These equivalent circuits, except for the lumped elements and ideal transformers, are similar to those of the uniform $\overline{RC}$ section (as shown in Fig. 2.1). The symmetric

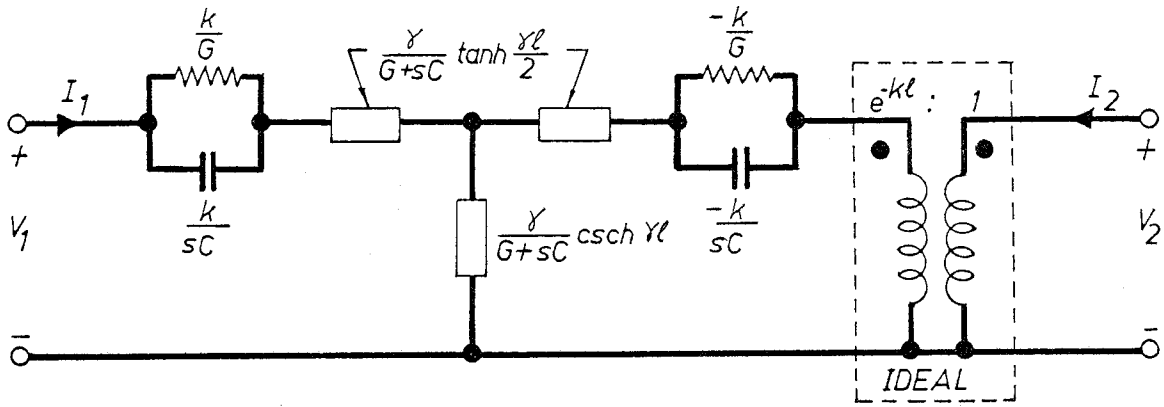

Fig. 2.3 - An Equivalent Circuit of the Exponential $\overline{RC}$ Section.

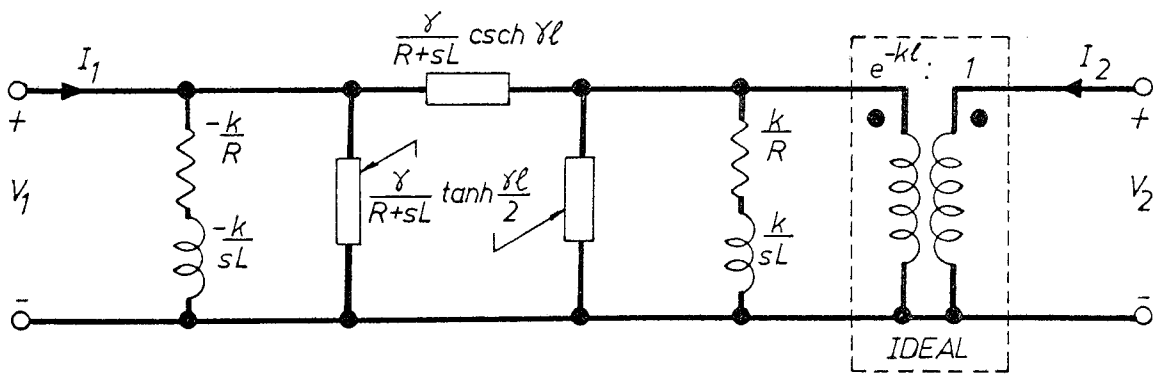

Fig. 2.4 - An Alternative Equivalent Circuit of the Exponential $\overline{RC}$ Section.

portions of the equivalent circuits, namely the T-network of Fig. 2.3 and the π-network of Fig. 2.4, do not represent any physically realizable uniform $\overline{RC}$ section because of the nature of the γ function. The equivalent circuits become those of the uniform $\overline{RC}$ section when the taper constant k of the exponential $\overline{RC}$ section is zero.

Synthesis procedures for exponential $\overline{RC}$ networks will be developed with the aid of these equivalent circuits.

A search of the literature shows that the equivalent circuits for the exponential $\overline{RC}$ section have not been published previously.

2.6 Cascaded Exponential $\overline{RC}$ Sections

Consider a cascade of exponential $\overline{RC}$ sections with the configuration of Fig. 2.2. For the ith section, from Equations (2.13) and (2.41), we obtain

$$Z_i(s) = \frac{(R_i+sL_i)\, e^{2k_i\ell_i} + (\gamma_i \coth \gamma_i\ell_i + k_i)\, Z_{i+1}(s)}{(\gamma_i \coth \gamma_i\ell_i - k_i)\, e^{2k_i\ell_i} + (G_i+sC_i)\, Z_{i+1}(s)} \tag{2.43}$$

where $$\gamma_i \triangleq \sqrt{k_i^{\,2} + (R_i+sL_i)(G_i+sC_i)} \tag{2.44}$$

and k_i, R_i, L_i, G_i, C_i, ℓ_i are the parameters of the ith section.

Similarly, from Equations (2.16) and (2.42),

$$Y_i(s) = \frac{(G_i+sC_i)\, e^{-2k_i\ell_i} + (\gamma_i \coth \gamma_i\ell_i - k_i)\, Y_{i+1}(s)}{(\gamma_i \coth \gamma_i\ell_i + k_i)\, e^{-2k_i\ell_i} + (R_i+sL_i)\, Y_{i+1}(s)} \tag{2.45}$$

Following Wyndrum's synthesis technique for uniform $\overline{RC}$ networks, the d-p immittance functions (2.43) and (2.45) may be premultiplied by factors of the form $\frac{g(s)}{\gamma\ell}$ and the p-r

conformal transformation (2.18) applied to the resultant functions, where g(s) is given by one of the Equations (2.20)-(2.23), and γ by Equation (2.36). However, the transformed d-p immittance functions cannot be identified with lumped-parameter d-p immittance functions, so that no synthesis procedure using Wyndrum's technique can be developed. Attempts at finding some other p-r conformal transformation to accomplish the change to lumped-parameter d-p immittance functions proved unsuccessful.

Comparison of the d-p immittance functions (2.43) and (2.45) with the equivalent circuits of Figs. 2.3 and 2.4, and with those of the uniform $\overline{RC}$ section, leads to the following conjecture.

2.7 Conjecture

It is conjectured that a cascade synthesis procedure using Richards' Theorem[23, 24] for the realization of d-p immittance functions by exponential $\overline{RC}$ networks can be developed if and only if the lumped elements in the equivalent circuits of the exponential $\overline{RC}$ sections can be eliminated. The lumped elements correspond to the rational terms that appear in the parameter matrices (2.41) and (2.42).

In the following, and in Chapter 3, the sufficiency part of this conjecture will be demonstrated by developing specific synthesis procedures. No proof of the necessary part of the conjecture has been found.

2.7.1 Cascaded Exponential $\overline{RC}$ Sections Under the Restriction of the Conjecture

Let us reconsider the cascade of exponential $\overline{RC}$

sections of Fig. 2.2. If it is assumed possible to eliminate the lumped elements of the equivalent circuit of Fig. 2.3, namely the capacitors and resistors, for each exponential $\overline{RC}$ section, then, for the ith section,

$$(z_{11})_i = \frac{\gamma_i}{G_i+sC_i} \coth \gamma_i \ell_i$$

$$(z_{12})_i = (z_{21})_i = e^{k_i \ell_i} \frac{\gamma_i}{G_i+sC_i} \operatorname{csch} \gamma_i \ell_i$$

$$(z_{22})_i = e^{2k_i \ell_i} \frac{\gamma_i}{G_i+sC_i} \coth \gamma_i \ell_i$$

and

$$Z_i(s) = \frac{\gamma_i}{G_i+sC_i} \frac{e^{2k_i \ell_i} \tanh \gamma_i \ell_i + (G_i+sC_i)\, Z_{i+1}(s) / \gamma_i}{e^{2k_i \ell_i} + (G_i+sC_i)\, Z_{i+1}(s) \tanh \gamma_i \ell_i / \gamma_i} \tag{2.46}$$

It will be shown later that a p-r conformal transformation can be applied to the d-p impedance $Z_i(s)$ and a cascade synthesis procedure developed with the aid of Richards' Theorem.

Similarly, if it is assumed possible to eliminate the lumped elements of the equivalent circuit of Fig. 2.4, namely the inductors and resistors, for each exponential $\overline{RC}$ section of the cascade, then for the ith section,

$$Y_i(s) = \frac{\gamma_i}{R_i+sL_i} \frac{e^{-2k_i \ell_i} \tanh \gamma_i \ell_i + (R_i+sL_i)\, Y_{i+1}(s) / \gamma_i}{e^{-2k_i \ell_i} + (R_i+sL_i)\, Y_{i+1}(s) \tanh \gamma_i \ell_i / \gamma_i} \tag{2.47}$$

A p-r conformal transformation and Richards' Theorem can also be applied to this d-p admittance function to develop

a cascade synthesis procedure.

The above discussion has assumed that the lumped elements in the equivalent circuits of the exponential $\overline{RC}$ sections can be eliminated. Some network configurations that will accomplish this elimination will be presented in Chapter 3.

The p-r conformal transformations that may be applied, under the restriction of the conjecture, to change the problem into a lumped-parameter synthesis problem will be discussed next.

2.7.2 Positive-Real Conformal Transformations[22]

If the exponential $\overline{RC}$ d-p immittance functions derived in the previous section are premultiplied by factors of the form $\frac{g(s)}{\gamma\ell}$, where g(s) depends upon the nature of the immittance function and upon the values of the series inductances and shunt conductances of the $\overline{RC}$ sections (see Equations (2.20)-(2.23) in Section 2.4.1), and

$$\gamma\ell \triangleq \gamma_i \ell_i$$

$$\triangleq \sqrt{k^2+(R+sL)(G+sC)}\ \ell \tag{2.48}$$

and if the p-r conformal transformation

$$w = \tanh \gamma\ell \tag{2.49}$$

is applied, then the resultant d-p immittance functions will be rational in the new complex variable w. Thus, Equations (2.46) and (2.47) become, respectively,

$$z_i(w) \triangleq \frac{g(s)}{\gamma\ell} Z_i(s)$$

$$= \frac{1}{\rho_i} \frac{w\, e^{2k_i\ell_i} / \rho_i + z_{i+1}(w)}{e^{2k_i\ell_i} / \rho_i + w\, z_{i+1}(w)} \tag{2.50}$$

and $y_i(w) \triangleq \frac{g(s)}{\gamma\ell} Y_i(s)$

$$= \frac{1}{\zeta_i} \frac{w\, e^{-2k_i\ell_i} / \zeta_i + y_{i+1}(w)}{e^{-2k_i\ell_i} / \zeta_i + w\, y_{i+1}(w)} \tag{2.51}$$

where ζ_i is given by Equation (2.25) or (2.26). These d-p immittance functions are lumped LC functions of the complex variable w.

Because the transformation of the exponential $\overline{RC}$ d-p immittance function into a lumped LC d-p immittance function is done at the start of the synthesis procedure (Fig. 1.1), $\gamma\ell$ is common to all sections of the network.

Instead of the p-r conformal transformation (2.49), the alternative p-r conformal transformation

$$w = \coth \gamma\ell \tag{2.52}$$

might be used. The resultant transformed d-p immittance functions considered would then be dual to those obtained using the transformation (2.49). Except for the change in correspondence with lumped immittances in the w-domain, the use of the transformation (2.52) would not greatly affect the synthesis procedure, so this alternative will not be pursued further.

2.7.3 Realizability Conditions

Because of the synthesis approach of Fig. 1.1 and the properties of the p-r conformal transformation of Section 2.7.2, the necessary and sufficient conditions for a d-p immittance F(s) to be realizable by a network of exponential $\overline{RC}$ sections can be derived by consideration of the realizability conditions

for the corresponding lumped LC d-p immittance function f(w); namely, that f(w) is realizable if and only if it can be expressed as

$$f(w) = \frac{K'}{w} \frac{\prod_{j=1}^{p} (w^2 + n_j)}{\prod_{j=1}^{m} (w^2 + d_j)} \tag{2.53}$$

where K' is a real positive constant,

$m = p$ or $m = p-1$,

n_j, d_j are real and positive,

and $d_j > n_j$. (2.54)

Substituting from Equation (2.49) and premultiplying by the factor $\frac{\gamma\ell}{g(s)}$, where g(s) is given by Equations (2.20)-(2.23), we obtain

$$F(s) \triangleq \frac{\gamma\ell}{g(s)} f(w)$$

$$= K \frac{\gamma\ell}{g(s)} \frac{(e^{2\gamma\ell}+1)^{2(m-p)+1}}{(e^{2\gamma\ell}-1)} \frac{\prod_{j=1}^{p} \left(e^{4\gamma\ell}+N_j e^{2\gamma\ell}+1\right)}{\prod_{j=1}^{m} \left(e^{4\gamma\ell}+D_j e^{2\gamma\ell}+1\right)} \tag{2.55}$$

where $$K \triangleq K' \frac{\prod_{j=1}^{p} (n_j+1)}{\prod_{j=1}^{m} (d_j+1)} \tag{2.56}$$

$$N_j \triangleq 2 \frac{n_j-1}{n_j+1} \tag{2.57}$$

and $$D_j \triangleq 2 \frac{d_j-1}{d_j+1} \tag{2.58}$$

Therefore, from Equations (2.54) and (2.57), we have

$$n_j = \frac{2+N_j}{2-N_j} \tag{2.59}$$

and for n_j to be real and positive

$$|N_j| < 2 \tag{2.60}$$

Similarly, $|D_j| < 2$ (2.61)

Also, since $d_j > n_j$,

therefore, $D_j > N_j$ (2.62)

and only one coefficient in the set of N_j and D_j may be zero.

Thus, we have the realizability conditions:

A d-p immittance function F(s) under the p-r conformal transformation $w = \tanh \gamma\ell$, can be realized by a network of exponential $\overline{RC}$ sections (provided that the lumped elements in the equivalent circuits of these sections can be eliminated) if and only if F(s) can be expressed as

$$F(s) = K \frac{\gamma\ell}{g(s)} \frac{(e^{2\gamma\ell}+1)^{2(m-p)+1}}{(e^{2\gamma\ell}-1)} \frac{\prod_{j=1}^{p}(e^{4\gamma\ell}+N_j e^{2\gamma\ell}+1)}{\prod_{j=1}^{m}(e^{4\gamma\ell}+D_j e^{2\gamma\ell}+1)} \tag{2.63}$$

where K is a real positive constant,

$\gamma\ell$ is given by Equation (2.48),

g(s) is given by one of Equations (2.20)-(2.23),

$m = p$ or $m = p-1$,

$|N_j|, |D_j| < 2$,

$D_j > N_j$.

and only one coefficient in the set of N_j and D_j may be zero.

2.8 Discussion

It has been shown that, if it is possible to eliminate the lumped elements from the equivalent circuits of the exponential $\overline{RC}$ sections, the d-p immittance functions of exponential $\overline{RC}$ networks can be transformed into lumped-parameter d-p immittance functions. The transformed immittance functions (see Equations (2.50) and (2.51))are bilinear transformations between the input immittances and the terminating immittances, and Richards' Theorem can therefore be applied in a cascade synthesis procedure that will extend Wyndrum's procedure to the case of exponential $\overline{RC}$ networks.

Some network configurations of exponential $\overline{RC}$ sections and lumped elements that will meet the required constraints, and the specific synthesis procedures that can be consequently developed, will be presented in the next chapter.

3. THE SYNTHESIS OF DRIVING-POINT IMMITTANCE FUNCTIONS

3.1 Introduction

The conjecture discussed in Chapter 2 requires the elimination of the lumped elements from the equivalent circuit of each of the exponential $\overline{RC}$ sections before a synthesis procedure using Wyndrum's technique can be formulated. These lumped elements produce finite immittance poles, if the series inductances or the shunt conductances of the $\overline{RC}$ sections are not negligible, and it is necessary that the residues at these poles be negative or zero.

Provided that the taper constants of the exponential $\overline{RC}$ sections are all of the same sign, a simple cascade of sections together with compensating lumped elements might satisfy the constraints implied by the conjecture. Thus, a d-p impedance function of the form given by Equation (2.63) can be realized by a network with the configuration of Fig. 3.1, if the taper constants of the $\overline{RC}$ sections are all negative, the last section is open-circuited, and the resultant residue of adjacent $\overline{RC}$ sections at the pole, $s = -\frac{1}{\tau_s}$ where $\tau_s \triangleq \frac{C_i}{G_i}$, is negative or zero. Compensating elements can then be added in series with the sections to produce a zero residue at the pole, $s = -\frac{1}{\tau_s}$.

Similarly, a d-p admittance function can be realized by a network with the configuration of Fig. 3.2, if the taper constants of the $\overline{RC}$ sections are all positive, the end section is short-circuited, and the resultant residue of adjacent

$\overline{RC}$ sections at the pole, $s = \frac{-1}{\tau_p}$ where $\tau_p \triangleq \frac{L_i}{R_i}$, is negative or zero. Compensating lumped elements can then be added in shunt with the sections to produce a zero residue at the pole, $s = -\frac{1}{\tau_p}$.

However, the above cascade network configurations will only realize a restricted class of d-p immittance functions, namely, those which will ensure that the resultant residue at the pole produced by the lumped elements in the equivalent circuits of adjacent $\overline{RC}$ sections is negative or zero.

The positive lumped elements at one port of the equivalent circuit of an exponential $\overline{RC}$ section can be rendered ineffective by suitably terminating the section. That is, if the equivalent circuit of Fig. 2.3 is used, the section should be open-circuited as in Fig. 3.3, but if the equivalent circuit of Fig. 2.4 is used, the section should be short-circuited as in Fig. 3.4. The <u>negative</u> lumped elements at the input ports of these terminated sections provide negative residues at the poles produced by these elements. Therefore, the open-circuited section can be used as a series stub instead of, or together with, the compensating lumped elements in the network configuration of Fig. 3.1, while the short-circuited section can be used as a shunt stub instead of, or together with, the compensating lumped elements in the network configuration of Fig. 3.2. These network configurations, together with the relevant synthesis procedures, will be discussed next.

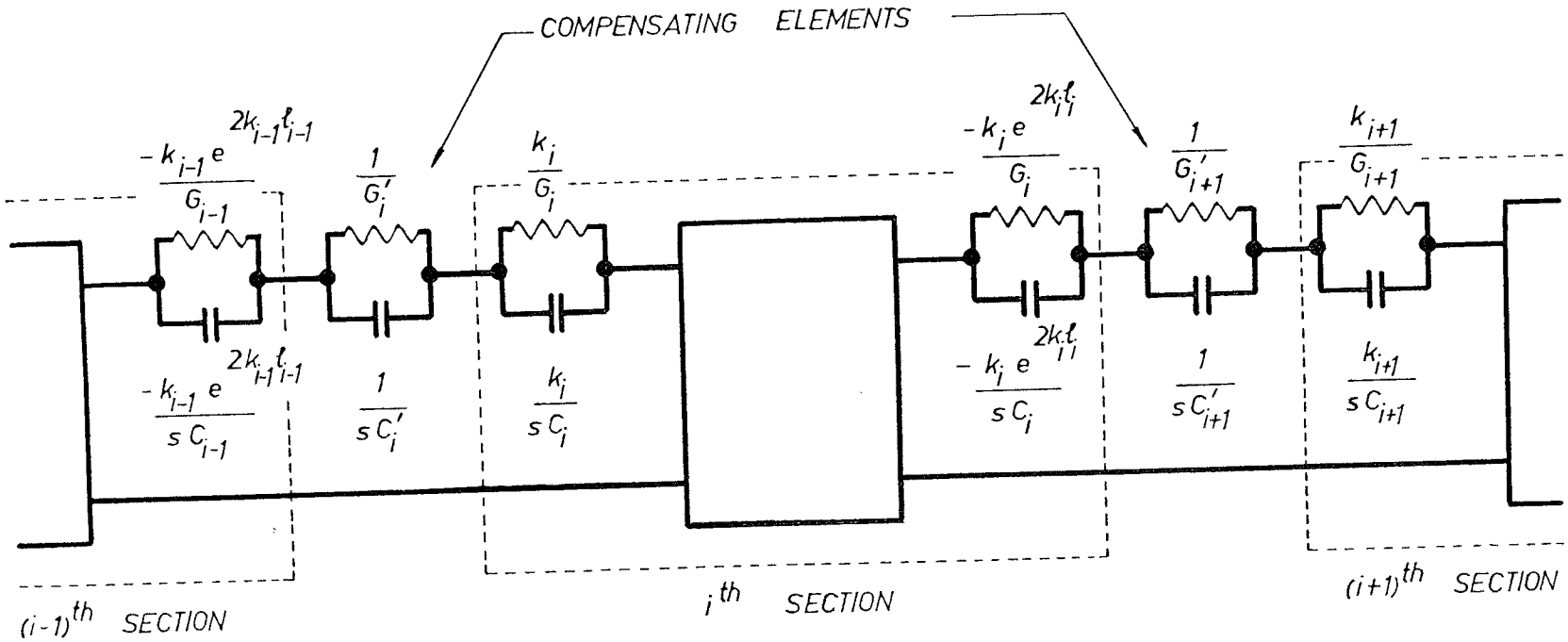

Fig. 3.1 - Cascade of Exponential $\overline{RC}$ Sections with Compensating Lumped Elements Added in Series with the Sections.

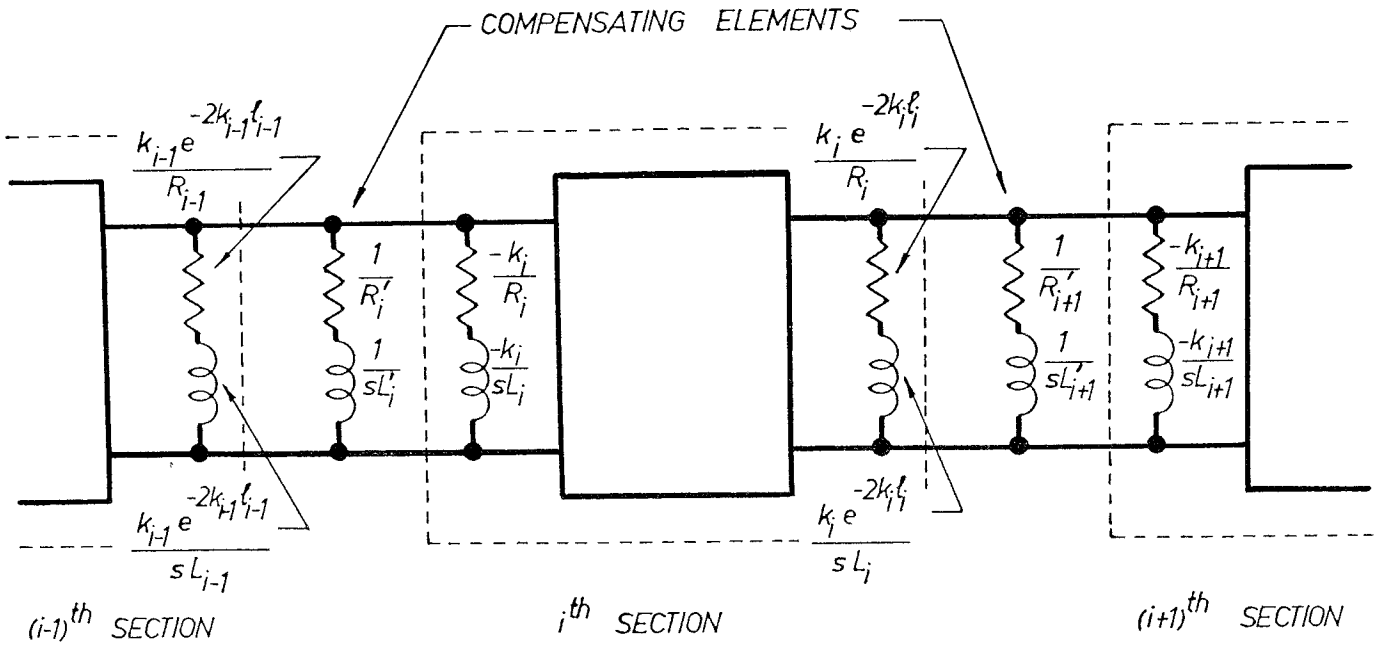

Fig. 3.2 - Cascade of Exponential $\overline{RC}$ Sections with Compensating Lumped Elements Added in Shunt with the Sections.

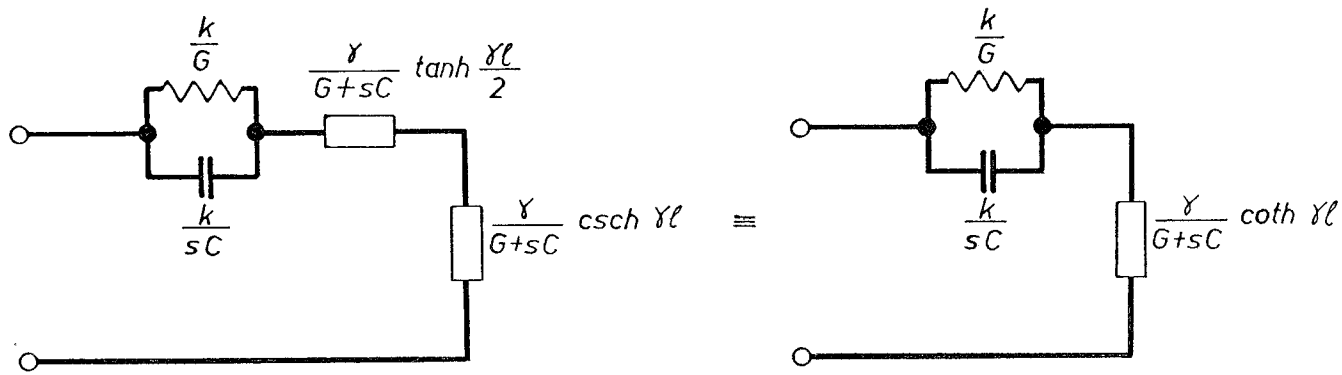

Fig. 3.3 - Equivalent Circuit of An Open-Circuited Exponential $\overline{RC}$ Section.

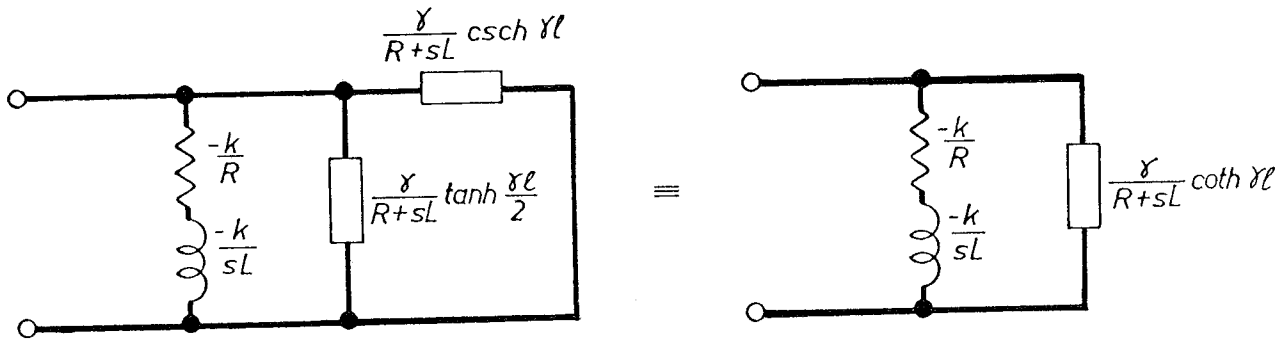

Fig. 3.4 - Equivalent Circuit of A Short-Circuited Exponential $\overline{RC}$ Section.

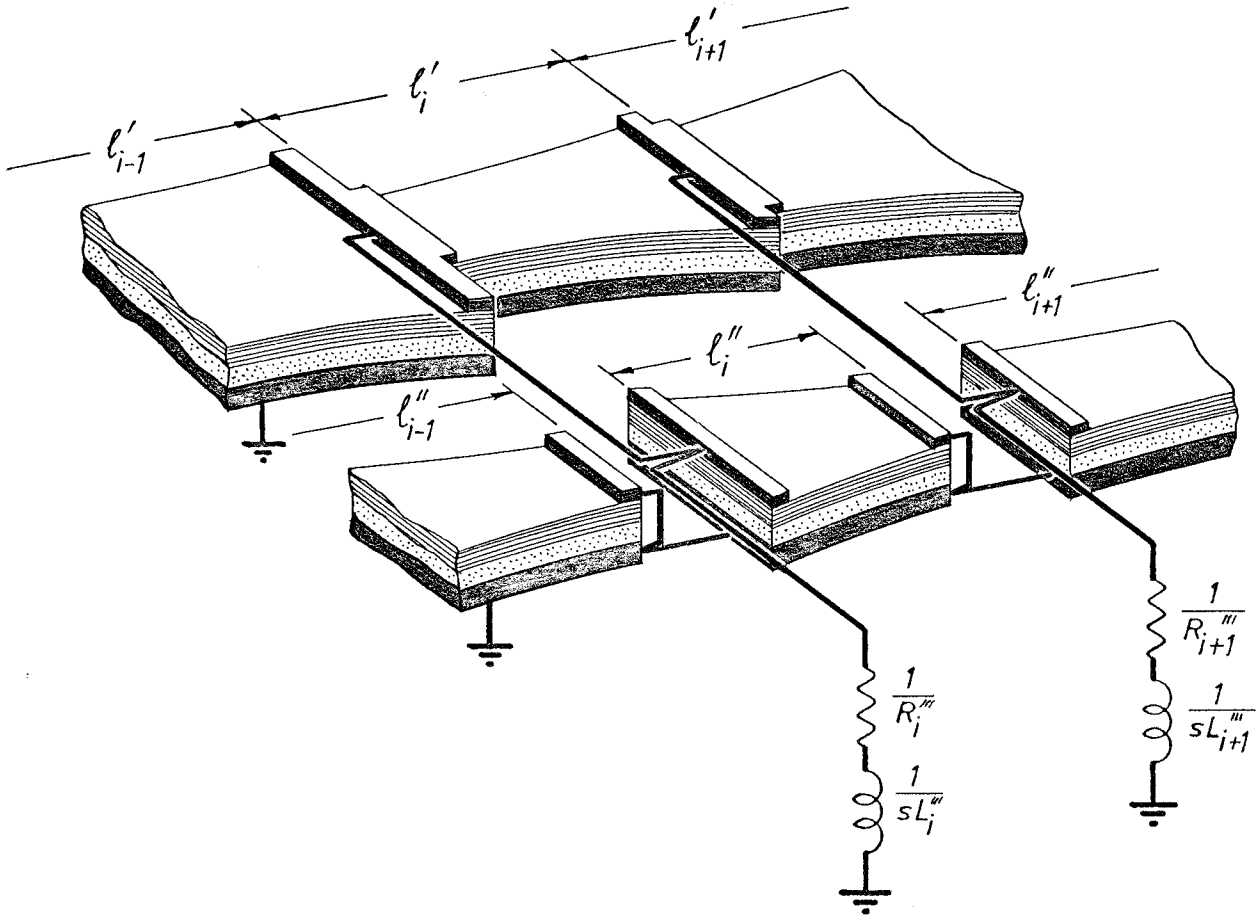

Fig. 3.5 - Cascaded Sections with Short-Circuited Stubs and Lumped Elements in Shunt.

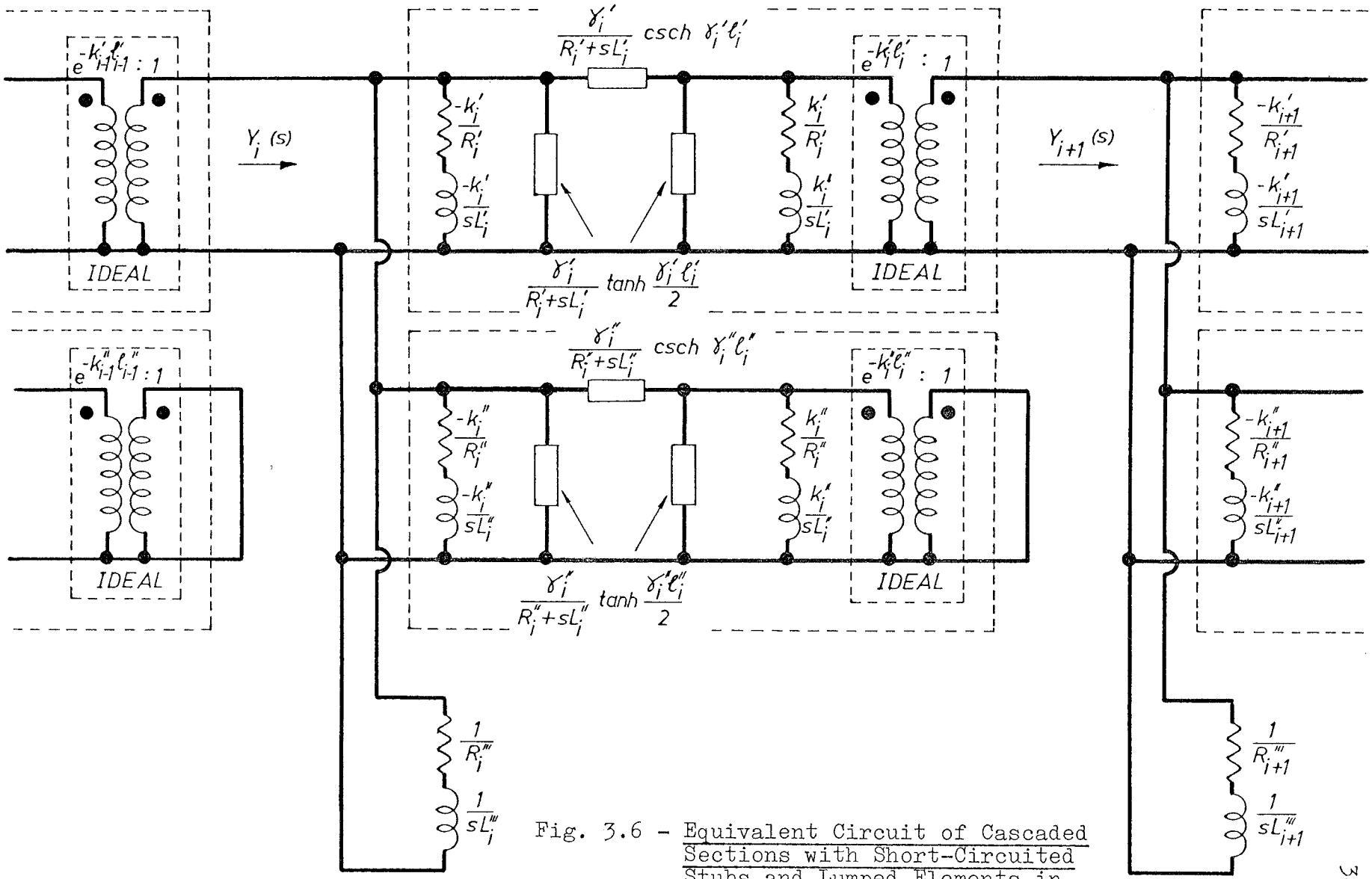

Fig. 3.6 - Equivalent Circuit of Cascaded Sections with Short-Circuited Stubs and Lumped Elements in Shunt.

3.2 Synthesis Procedures for Cascaded Sections with Short-Circuited Stubs and Lumped Elements in Shunt

Consider the network configuration of cascaded sections with short-circuited stubs and lumped elements in shunt (Fig. 3.5) and its equivalent circuit (Fig. 3.6). The last section of the cascade is terminated in a short circuit.

To eliminate the lumped elements, we require that, at the input junction,

$$-\frac{k_1'\ell_1'}{(R_1'+sL_1')\ell_1'} - \frac{k_1''\ell_1''}{(R_1''+sL_1'')\ell_1''} + \frac{1}{R_1''' + sL_1'''} = 0 \qquad (3.1)$$

and at the second, and each succeeding, cascade junction,

$$\frac{k_i'\ell_i' e^{-2k_i'\ell_i'}}{(R_i'+sL_i')\ell_i'} - \frac{k_{i+1}'\ell_{i+1}'}{(R_{i+1}'+sL_{i+1}')\ell_{i+1}'} - \frac{k_{i+1}''\ell_{i+1}''}{(R_{i+1}''+sL_{i+1}'')\ell_{i+1}''}$$

$$+ \frac{1}{R_{i+1}'''+sL_{i+1}'''} = 0 \qquad (3.2)$$

where $i=1, 2, 3, \ldots, n-1$,

and where the number of cascaded sections is n. To satisfy Equations (3.1) and (3.2) with non-negative R_i''' and L_i''', it is necessary that

$$k_i' \leqslant 0$$

$$k_i'' \geqslant 0 \qquad (3.3)$$

But $\gamma\ell$ and $k\ell$ are common to all sections of the network because a single p-r conformal transformation is used. Therefore, let

$$k_i'\ell_i' = -k_i''\ell_i'' \triangleq -k\ell \qquad (3.4)$$

where k is positive.

Then Equations (3.1) and (3.2) become, respectively,

$$\frac{1}{g(s)}\left\{k\ell\left[\frac{1}{R_1'\ell_1'}-\frac{1}{R_1''\ell_1''}\right]+\frac{1}{R_1'''}\right\}=0$$

$$\frac{1}{g(s)}\left\{k\ell\left[-\frac{e^{2k\ell}}{R_i'\ell_i'}+\frac{1}{R_{i+1}'\ell_{i+1}'}-\frac{1}{R_{i+1}''\ell_{i+1}''}\right]+\frac{1}{R_{i+1}'''}\right\}=0 \tag{3.5}$$

where g(s) is given by Equation (2.20) or (2.21), and

$$\tau_p \triangleq \frac{L_i'}{R_i'}=\frac{L_i''}{R_i''}=\frac{L_i'''}{R_i'''}=\cdots\cdots$$

From Equations (2.44), (2.45) and (3.4), we have

$$Y_i(s)=\frac{\gamma_i'}{R_i'+sL_i'}\,\frac{e^{-2k_i'\ell_i'}\tanh\gamma_i'\ell_i'+(R_i'+sL_i')\,Y_{i+1}(s)\,/\,\gamma_i'}{e^{-2k_i'\ell_i'}+(R_i'+sL_i')\,Y_{i+1}(s)\tanh\gamma_i'\ell_i'\,/\,\gamma_i'}$$

$$+\frac{\gamma_i''}{R_i''+sL_i''}\coth\gamma_i''\ell_i''$$

$$=\frac{\gamma\ell}{g(s)}\left[\frac{1}{R_i'\ell_i'}\,\frac{\tanh\gamma\ell+R_i'\ell_i'\,e^{2k\ell}\,Y_{i+1}(s)\,g(s)\,/\,\gamma\ell}{1+R_i'\ell_i'\,e^{2k\ell}\tanh\gamma\ell\;Y_{i+1}(s)\,g(s)\,/\gamma\ell}+\frac{1}{R_i''\ell_i''}\coth\gamma\right. \tag{3.6}$$

where g(s) is given by Equation (2.20) or (2.21), and here

$i = 1, 2, 3, \ldots, n.$

Under the p-r conformal transformation (2.49), we obtain

$$y_i(w)\triangleq\frac{g(s)}{\gamma\ell}\,Y_i(s)$$

$$=\frac{1}{R_i'\ell_i'}\,\frac{w+R_i'\ell_i'\,e^{2k\ell}\,y_{i+1}(w)}{1+R_i'\ell_i'\,e^{2k\ell}\,y_{i+1}(w)\,w}+\frac{1}{R_i''\ell_i''}\,\frac{1}{w} \tag{3.7}$$

where $y_{i+1}(w) \triangleq \frac{g(s)}{\gamma\ell} Y_{i+1}(s)$

This is an LC d-p immittance function in the w-domain, because $Y_{i+1}(s) = \infty$ for a short-circuit termination, so that $y_{i+1}(w) = \infty$, and

$$y_i(w) = \left[\frac{1}{R_i'\ell_i'} + \frac{1}{R_i''\ell_i''}\right]\frac{1}{w} \tag{3.8}$$

which is an inductive admittance in the w-domain.

From Equation (3.7),

$$y_i(1) = \frac{1}{R_i'\ell_i'} + \frac{1}{R_i''\ell_i''} \tag{3.9}$$

and

$$y_{i+1}(w) = \frac{e^{2k\ell}}{R_i'\ell_i'} \frac{y_i(w) - w\, y_i(1) - (1/w - w) / R_i''\ell_i''}{y_i(1) - w\, y_i(w)}$$

$$= \frac{e^{2k\ell}}{R_i'\ell_i'} \frac{\left[y_i(w) - 1/(R_i''\ell_i''\, w)\right] - w\left[y_i(1) - 1/R_i''\ell_i''\right]}{\left[y_i(1) - 1/R_i''\ell_i''\right] - w\left[y_i(w) - 1/(R_i''\ell_i''\, w)\right]} \tag{3.10}$$

Because the short-circuited shunt stub has an admittance $\frac{1}{R_i''\ell_i''}\frac{1}{w}$, it realizes part of the pole of $y_i(w)$ at $w = 0$. If the pole is completely removed, then $y_{i+1}(w)$ will have a zero at $w=0$ and this cannot be realized by the network under consideration. Therefore, the parameters of the short-circuited shunt stub must be chosen such that

$$\frac{1}{R_i''\ell_i''} < \left[w\, y_i(w)\right]\Big|_{w=0} \tag{3.11}$$

This requirement may conflict with the constraint imposed by the conjecture (given by Equations (3.5)), in which case the synthesis procedure breaks down.

If Inequality (3.11) is satisfied, then $\left[y_i(w) - \frac{1}{R_i''\ell_i''}\frac{1}{w}\right]$ is a p-r function because $y_i(w)$ and

$\frac{1}{R_i''\ell_i''}\frac{1}{w}$ are p-r. Hence, by Richard's Theorem (see Equation 2.27), $y_{i+1}(w)$, as given by Equation (3.10), is a p.r. function with $\alpha=1$ and $\beta = \frac{e^{2k\ell}}{R_i'\ell_i'}$, a real positive constant.

Also, $y_{i+1}(w)$ is a realizable LC d-p admittance function because $y_i(w)$ is an LC d-p admittance function. Since the factor $(1-w^2)$ can be cancelled from the numerator and denominator of $y_{i+1}(w)$, $y_{i+1}(w)$ is of lower rank that $y_i(w)$.

Equations (3.5) may be rewritten as

$$\frac{1}{g(s)}\left\{k\ell\left[y_1(1) - \frac{2}{R_1''\ell_1''}\right] + \frac{1}{R_1'''}\right\} = 0$$

$$\frac{1}{g(s)}\left\{k\ell\left[\frac{-e^{2k\ell}}{R_i'\ell_i'} + y_{i+1}(1) - \frac{2}{R_{i+1}''\ell_{i+1}''}\right] + \frac{1}{R_{i+1}'''}\right\} = 0 \qquad (3.12)$$

There are many possible combinations of the values of the parameters $R_i'\ell_i'$, $R_i''\ell_i''$ and R_i''' that will satisfy Equations (3.12), so that different networks may be realized for the same d-p immittance function. Only two of these possible realizations will be considered here, namely,

(1) the realization which requires a minimum number of $\overline{RC}$ sections and lumped elements,

and (2) the realization which facilitates practical implementation in thin-film form.

3.2.1 Realization with a Minimum Number of $\overline{RC}$ Sections and Lumped Elements

From Equations (3.9) and (3.12), if $\frac{1}{R_1'''} = 0$, then

$$\frac{1}{R_1'\ell_1'} = \frac{1}{R_1''\ell_1''} = \frac{y_1(1)}{2} \tag{3.13}$$

Also, if $\dfrac{e^{2k\ell}}{R_i'\ell_i'} \geqslant y_{i+1}(1)$, with $\dfrac{1}{R_{i+1}''\ell_{i+1}''} = 0$,

then $\dfrac{1}{R_{i+1}'\ell_{i+1}'} = y_{i+1}(1)$

$$\text{and } \frac{1}{R_{i+1}'''} = k\ell\left[\frac{e^{2k\ell}}{R_i'\ell_i'} - y_{i+1}(1)\right] \tag{3.14}$$

but, if $\dfrac{e^{2k\ell}}{R_i'\ell_i'} < y_{i+1}(1)$, with $\dfrac{1}{R_{i+1}'''} = 0$,

then $\dfrac{1}{R_{i+1}''\ell_{i+1}''} = \dfrac{1}{2}\left[y_{i+1}(1) - \dfrac{e^{2k\ell}}{R_i'\ell_i'}\right]$

$$\text{and } \frac{1}{R_{i+1}'\ell_{i+1}'} = y_{i+1}(1) - \frac{1}{R_{i+1}''\ell_{i+1}''} = \frac{1}{2}\left[y_{i+1}(1) + \frac{e^{2k\ell}}{R_i'\ell_i'}\right] \tag{3.15}$$

The synthesis procedure is therefore as follows:

3.2.1.1 <u>Synthesis Procedure</u>

Given: $k\ell$ and $\gamma\ell$, as specified by Equations (2.48), (2.49) and and (3.4) and $y_1(w)$, a d-p admittance function which satisfies the realizability conditions of Section 2.7.3 and where $\left[wy_1(w)\right]\Big|_{w=0} > \dfrac{y_1(1)}{2}$.

Step 1: From Equation (3.13), $\dfrac{1}{R_1'\ell_1'} = \dfrac{y_1(1)}{2}$

$$\frac{1}{R_1''\ell_1''} = \frac{y_1(1)}{2}$$

$$\text{and} \qquad \frac{1}{R_1'''} = 0 \tag{3.16}$$

Hence, by Equations (2.49) and (3.4), the parameters of the first main cascade $\overline{RC}$ section and its short-circuited shunt stub can be determined. Lumped elements are not required.

Step 2: From Equation (3.10) determine $y_{i+1}(w)$,

$$\text{i.e., } y_{i+1}(w) = \frac{e^{2k\ell}}{R_i'\ell_i'} \frac{y_i(w) - w\, y_i(1) - (1/w - w)/R_i''\ell_i''}{y_i(1) - w\, y_i(w)} \tag{3.17}$$

where $i = 1$, remembering to cancel the $(1-w^2)$ factor from the numerator and the denominator.

$$\text{Now} \left[w\, y_{i+1}(w)\right]\Big|_{w=0} > \frac{1}{2}\left[y_{i+1}(1) - \frac{e^{2k\ell}}{R_i'\ell_i'}\right] \tag{3.18}$$

must be satisfied. If the inequality is not satisfied, then the procedure breaks down and a fresh start, with new $\gamma\ell$, $k\ell$ and $y_1(w)$, must be made.

Step 3: If $y_{i+1}(1) \leqslant \frac{e^{2k\ell}}{R_i'\ell_i'}$, then, from Equations (3.14),

$$\frac{1}{R_{i+1}'\ell_{i+1}'} = y_{i+1}(1)$$

$$\frac{1}{R_{i+1}''\ell_{i+1}''} = 0$$

$$\text{and } \frac{1}{R_{i+1}'''} = k\ell\left[\frac{e^{2k\ell}}{R_i'\ell_i'} - y_{i+1}(1)\right] \tag{3.19}$$

but if $y_{i+1}(1) > \frac{e^{2k\ell}}{R_i'\ell_i'}$, then, from Equations (3.15),

$$\frac{1}{R'_{i+1}\ell'_{i+1}} = \frac{1}{2}\left[y_{i+1}(1) + \frac{e^{2k\ell}}{R'_i\ell'_i}\right]$$

$$\frac{1}{R''_{i+1}\ell''_{i+1}} = \frac{1}{2}\left[y_{i+1}(1) - \frac{e^{2k\ell}}{R'_i\ell'_i}\right]$$

$$\text{and } \frac{1}{R'''_{i+1}} = 0 \qquad (3.20)$$

Hence the parameters of the second main cascade $\overline{RC}$ section and its short-circuited shunt stub, or its lumped elements in shunt, can be determined.

Step 4: Repeat Steps 2 and 3 for $i = 2, 3, \ldots, n-2$ until $y_n(w)$ of the form $\frac{K_n}{w}$ remains, where K_n is a real positive constant.

Step 5: $y_n(w)$ can be realized

(i) in exactly the same way as given by Step 3,

or (ii) by using Equations (3.19) if $y_n(1) \leqslant \frac{e^{2k\ell}}{R'_{n-1}\ell'_{n+1}}$,

but if $y_n(1) > \frac{e^{2k\ell}}{R'_{n-1}\ell'_{n-1}}$, then let $\frac{1}{R'_n\ell'_n} = 0$ so that $\frac{1}{R''_n\ell''_n} = y_n(1)$ and

$$\frac{1}{R''_n} = k\ell\left[\frac{e^{2k\ell}}{R'_{n-1}\ell'_{n-1}} + y_n(1)\right] \qquad (3.21)$$

or (iii) by using Equations (3.21) whatever the value of $y_n(1)$.

The last main cascade section is terminated in a short circuit.

Note that the synthesis procedure can be used whatever the values of the series inductances and shunt conductances of the $\overline{RC}$ sections. $\gamma\ell$ (Equation (2.48)) and g(s) (Equations (2.20) and (2.21)) must be modified accordingly.

3.2.2 Realization which Facilitates Practical Implementation

From Equations (3.9) and (3.12), if $\frac{1}{R_1'''} = 0$,

then $$\frac{1}{R_1'\ell_1'} = \frac{1}{R_1''\ell_1''} = \frac{y_1(1)}{2} \tag{3.22}$$

Let $$\frac{1}{R_{i+1}'\ell_{i+1}'} = \frac{1}{R_{i+1}''\ell_{i+1}''} = \frac{y_{i+1}(1)}{2}$$

then $$\frac{1}{R_{i+1}'''} = \frac{k\ell e^{2k\ell}}{R_i'\ell_i'} = k\ell e^{2k\ell}\,\frac{y_i(1)}{2} \tag{3.23}$$

If $R_i' = R_i'' \triangleq R_i$, $i = 1, 2, 3, \ldots, n$

then $\ell_i' = \ell_i'' \triangleq \ell_i$, from Equations (3.22) and (3.23);

$L_i' = L_i'' \triangleq L_i$,

and $k_i' = -k_i'' \triangleq k_i$, from Equation (3.4). (3.24)

Therefore, the main cascade section and its short-circuited shunt stub form a continuous section as shown in Fig. 3.7, and can be considered as a centre-tapped section. Practical realization in thin-film form is then greatly facilitated because fewer evaporation mask shapes have to be made.

From Equation (3.10), we have

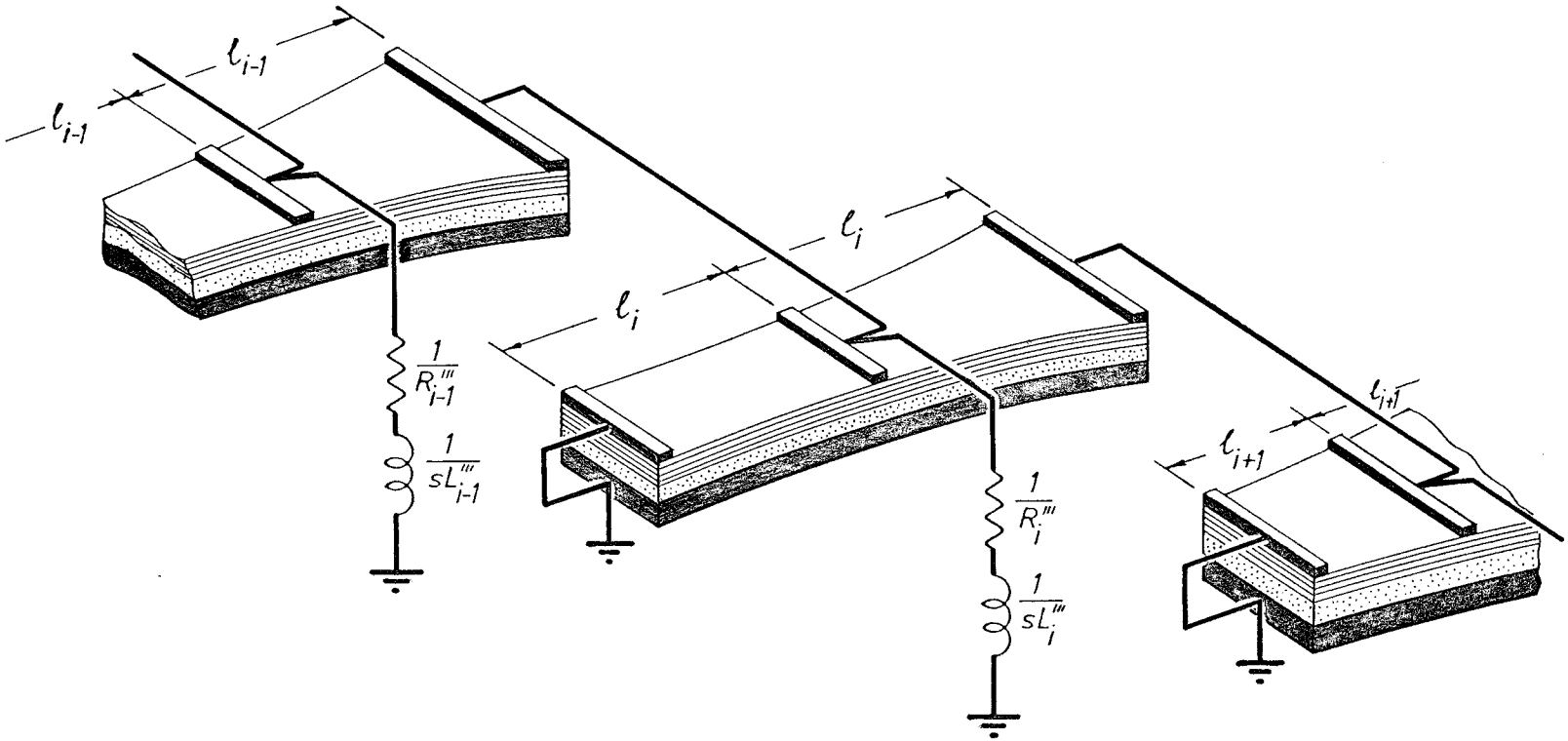

Fig. 3.7 - Alternative Configuration of Cascaded Sections with Short-Circuited Stubs and Lumped Elements in Shunt.

$$y_{i+1}(w) = \frac{y_i(1)}{2}\, e^{2k\ell}\, \frac{y_i(w) - w\, y_i(1) - (1/w - w)\, y_i(1)/2}{y_i(1) - w\, y_i(w)} \tag{3.25}$$

The synthesis procedure is similar to that of the previous section and is as follows:

3.2.2.1 <u>Synthesis Procedure</u>

Given: $k\ell$ and $\gamma\ell$, as specified by Equations (2.48), (2.49) and (3.4),

and $y_1(w)$, a d-p admittance function which satisfies the realizability conditions of Section 2.7.3 and where $\left[w\, y_1(w)\right]\Big|_{w=0} > \frac{y_1(1)}{2}$.

Step 1: From Equations (3.22) and (3.24),

$$\frac{1}{R_1 \ell_1} = \frac{y_1(1)}{2}$$

$$\text{and } \frac{1}{R_1'''} = 0 \tag{3.26}$$

Hence, by Equations (2.48), (3.4) and (3.23), the parameters of the first main cascade section and its short-circuited shunt stub, i.e., the first continuous section, can be determined. Lumped elements are not required.

Step 2: From Equation (3.25), determine $y_{i+1}(w)$, i.e.,

$$y_{i+1}(w) = \frac{y_i(1)}{2}\, e^{2k\ell}\, \frac{y_i(w) - w\, y_i(1) - (1/w - w)\, y_i(1)/2}{y_i(1) - w\, y_i(w)} \tag{3.27}$$

where $i = 1$, remembering to cancel the $(1-w^2)$ factor from the numerator and denominator.

Now, $\left[w\ y_{i+1}(w)\right]\Big|_{w=0} > \dfrac{y_{i+1}(1)}{2}$ (3.28)

must be satisfied. If the inequality is not satisfied, then the procedure breaks down and a fresh start must be made with new $\gamma\ell$, $k\ell$ and $y_1(w)$.

Step 3: From Equation (3.23),

$$\frac{1}{R_{i+1}\ell_{i+1}} = \frac{y_{i+1}(1)}{2}$$

and $$\frac{1}{R'''_{i+1}} = k\ell\ e^{2k\ell}\ \frac{y_i(1)}{2} \qquad (3.29)$$

Hence, the parameters of the second continuous section and the lumped elements in shunt can be determined.

Step 4: Repeat Steps 2 and 3 for i = 2, 3, ..., until $y_1(w)$ is completely realized. The last section is short-circuit terminated.

As in the previous case, the synthesis procedure can be used whatever the values of the series inductances and shunt conductances of the $\overline{RC}$ sections. $\gamma\ell$ (Equation (2.48)) and g(s) (Equations (2.20) and (2.21)) must be modified accordingly.

3.3 Synthesis Procedures for Cascaded Sections with Open-Circuited Stubs and Lumped Elements in Series

Consider the network configuration of cascaded $\overline{RC}$ sections with open-circuited stubs and lumped elements in series as shown in Fig. 3.8 and its equivalent circuit shown in Fig. 3.9.

This configuration is "dual" to that of Section 3.2. Thus, the equations, synthesis procedures and remarks of

Section 3.2 similarly apply except that

Z replaces Y,

z replaces y,

(G+sC) replaces (R+sL),

open-circuited replaces short-circuited,

series replaces shunt,

C_i replaces R_i,

$|k|$ replaces k except in Equation (3.4),

where k is negative,

and g(s) is given by Equation (2.22) or (2.23).

The "dual" network configuration of Fig. 3.7 is shown in Fig. 3.10.

3.4 A Synthesis Procedure for a Cascade of Sections in Parallel Together with Lumped Elements in Shunt

If the $\overline{RC}$ sections used as short-circuited stubs in the network configuration of Section 3.2 are instead paralleled at both ports with the respective ports of the main cascade $\overline{RC}$ sections, we obtain the network configuration of Fig. 3.11, which has the equivalent circuit shown in Fig. 3.12. The last set of sections in parallel are terminated in a short circuit.

In order to eliminate the lumped elements, we require that

$$\frac{1}{g(s)}\, k\ell \left[\frac{1}{R_1'\ell_1'} - \frac{1}{R_1''\ell_1''}\right] = 0$$

$$\frac{1}{g(s)}\left\{k\ell\left[-\frac{e^{2k\ell}}{R_i'\ell_i'} + \frac{e^{-2k\ell}}{R_i''\ell_i''} + \frac{1}{R_{i+1}'\ell_{i+1}'} - \frac{1}{R_{i+1}''\ell_{i+1}''}\right] + \frac{1}{R_i'''}\right\} = 0 \qquad (3.30)$$

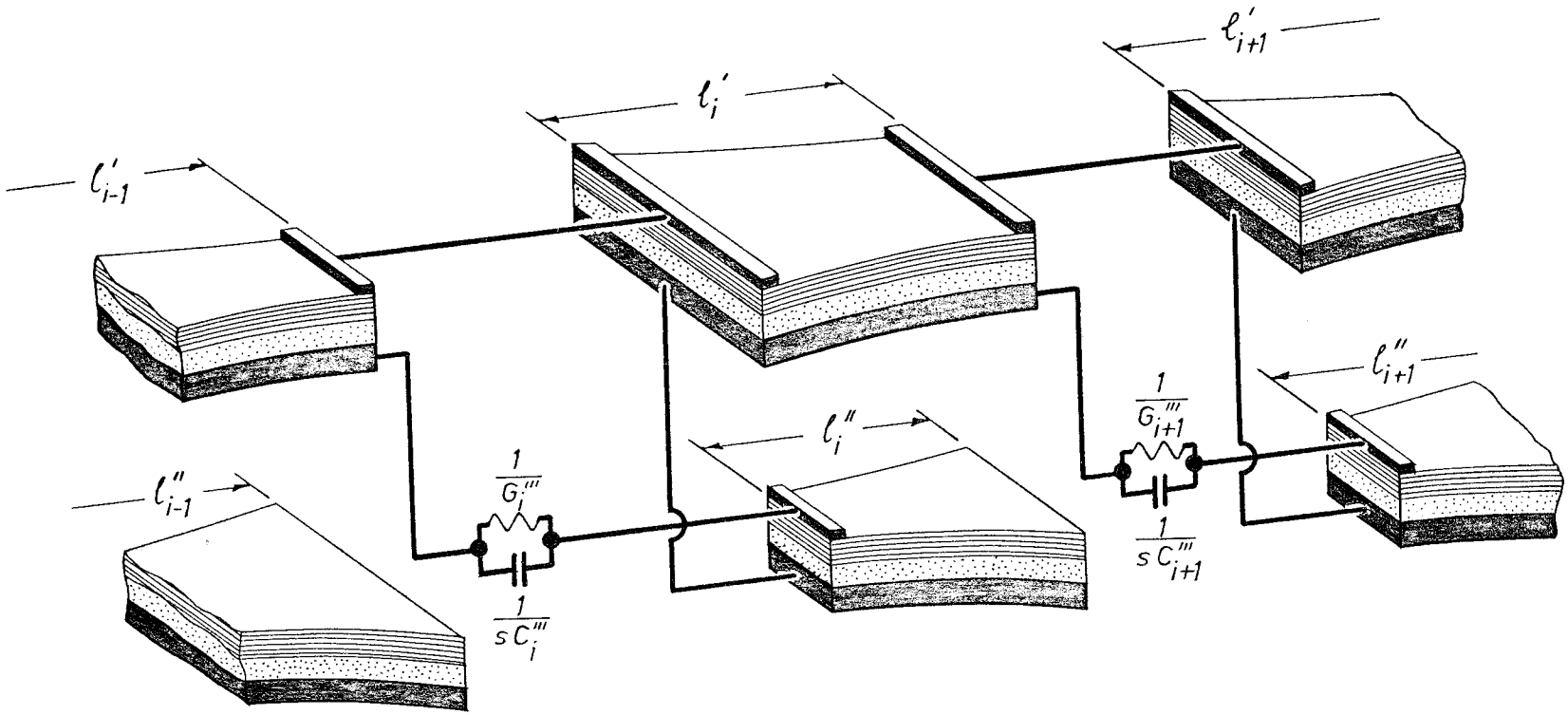

Fig. 3.8 - Cascaded Sections with Open-Circuited Stubs and Lumped Elements in Series.

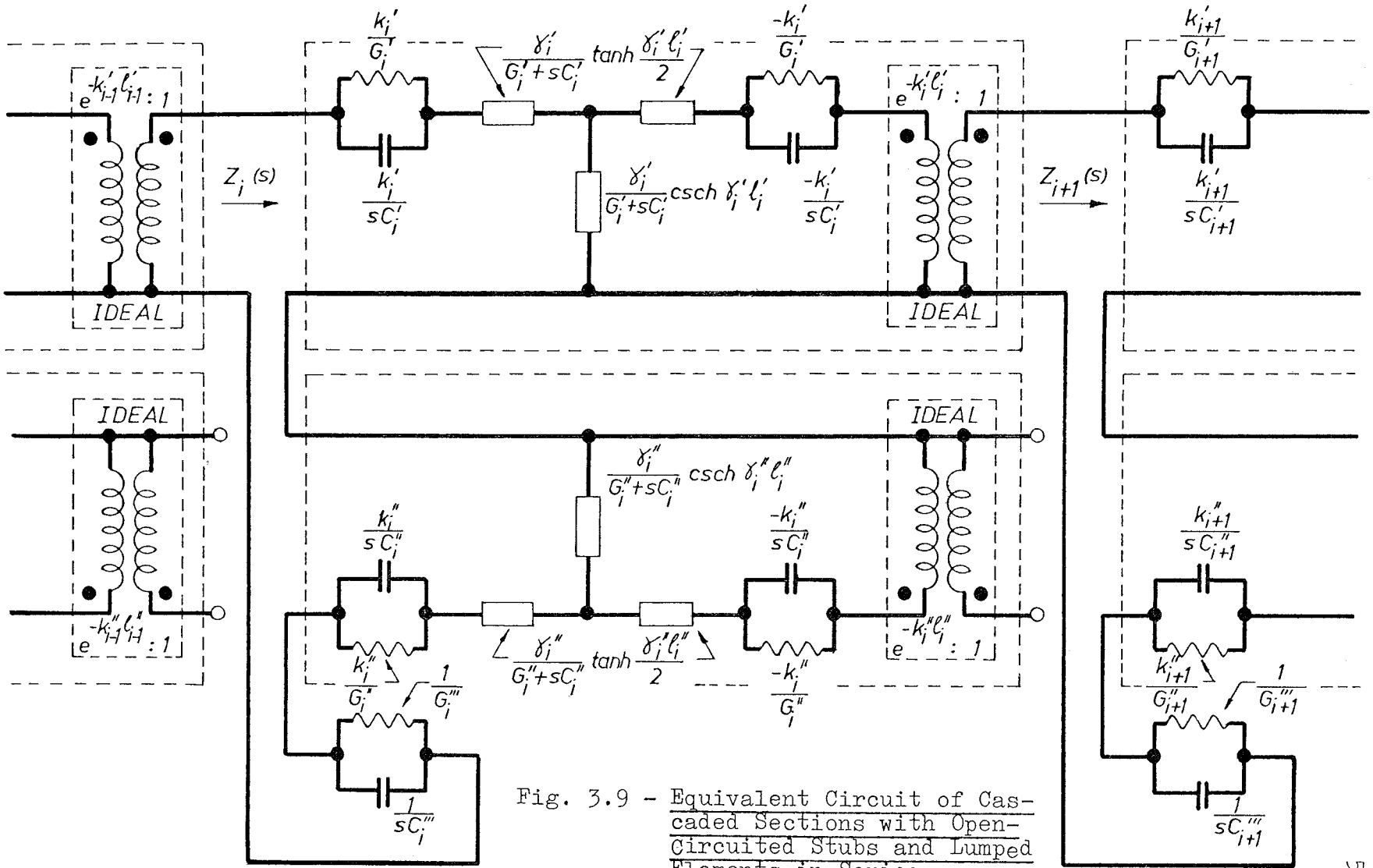

Fig. 3.9 - Equivalent Circuit of Cascaded Sections with Open-Circuited Stubs and Lumped Elements in Series.

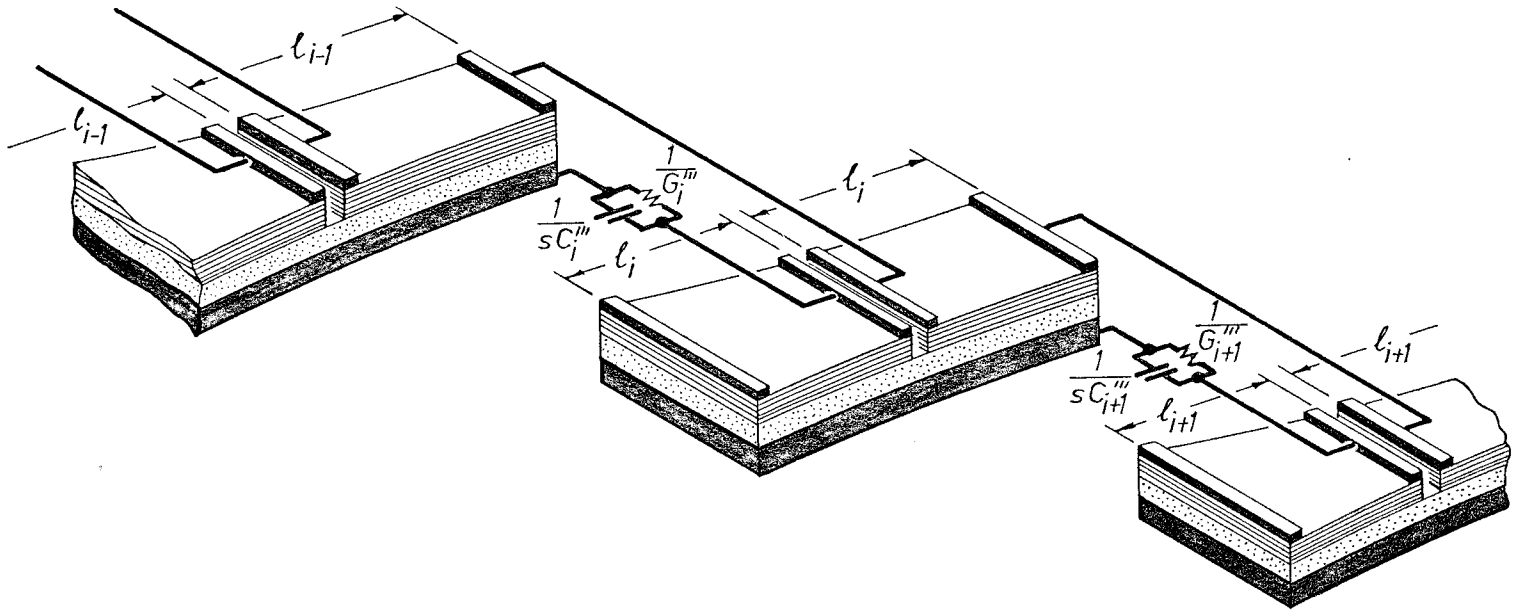

Fig. 3.10 - Alternative Configuration of Cascaded Sections with Open-Circuited Stubs and Lumped Elements in Series.

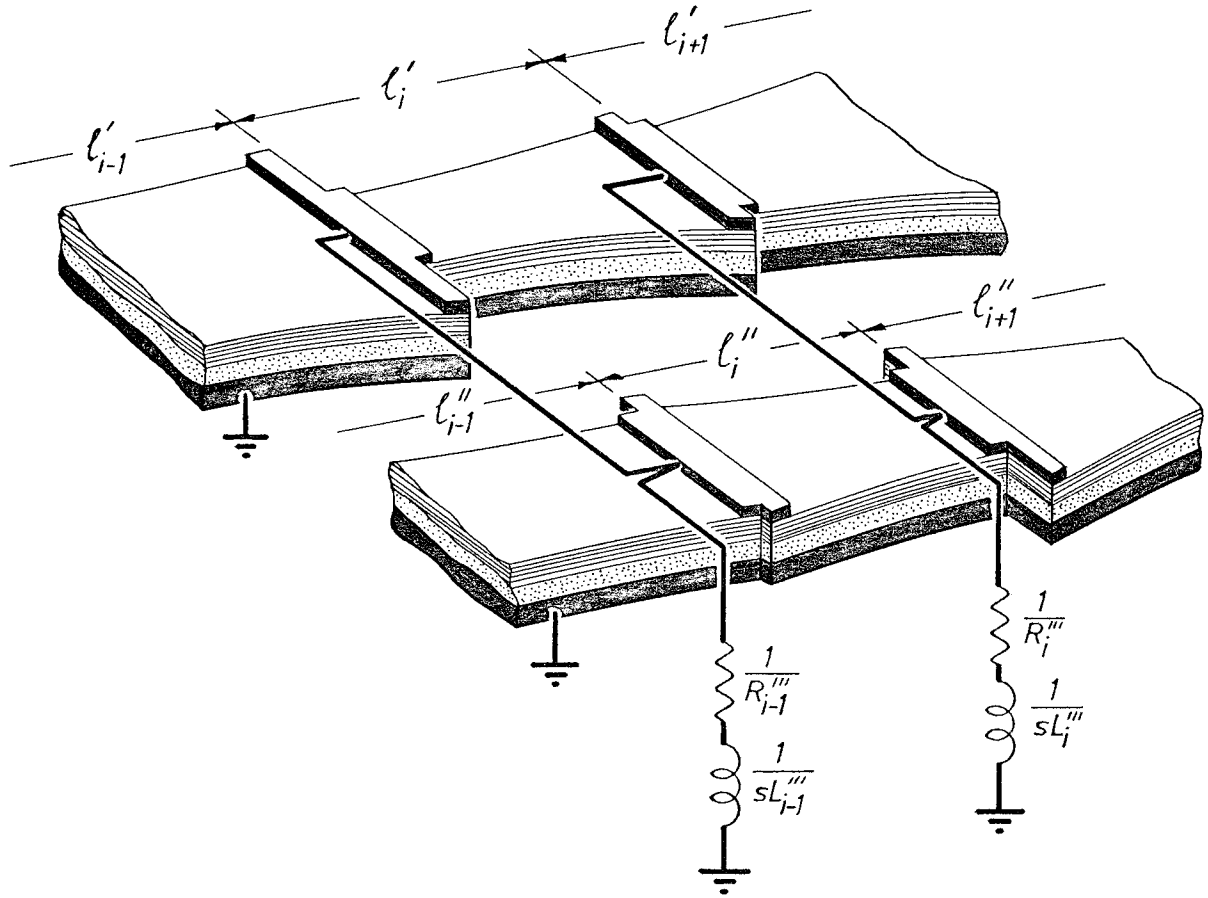

Fig. 3.11 - Cascade of Sections in Parallel Together with Lumped Elements in Shunt.

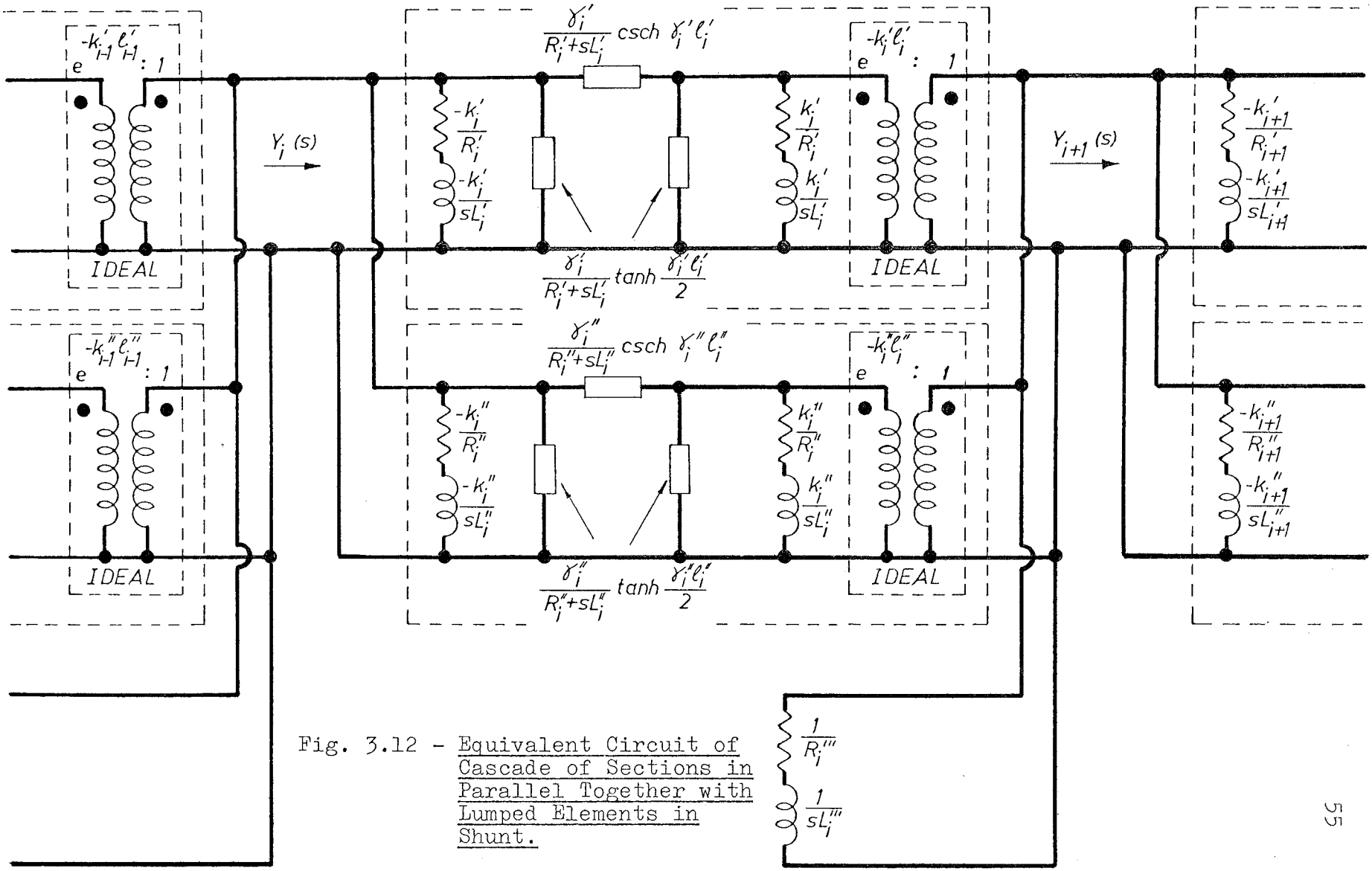

Fig. 3.12 - Equivalent Circuit of Cascade of Sections in Parallel Together with Lumped Elements in Shunt.

where $k_i'\ell_i' = -k_i''\ell_i'' \triangleq -k\ell$ (3.31)

k is positive,

g(s) is given by Equation (2.20) or (2.21),

$$\tau_p \triangleq \frac{L_i'}{R_i'} = \frac{L_i''}{R_i''} = \frac{L_i'''}{R_i'''} = \cdots\cdots \tag{3.32}$$

and i = 1, 2, 3, ..., n-1.

Let $\frac{1}{R_i'\ell_i'} = \frac{1}{R_i''\ell_i''} \triangleq \frac{1}{R_i\ell_i}$

and $\frac{1}{L_i'\ell_i'} = \frac{1}{L_i''\ell_i''} \triangleq \frac{1}{L_i\ell_i}$ (3.33)

Then the first of Equations (3.30) will always be satisfied and the second becomes

$$\frac{1}{g(s)}\left[-\frac{2k\ell \sinh 2k\ell}{R_i\ell_i} + \frac{1}{R_i'''}\right] = 0 \tag{3.34}$$

From Equations (2.47), (2.48) and (3.31), we obtain

$$Y_i(s) = \frac{\gamma\ell}{g(s)}\,\frac{2}{R_i\ell_i}\,\frac{2\cosh 2k\ell \tanh\gamma\ell + R_i\ell_i\frac{g(s)}{\gamma\ell}Y_{i+1}(s) + 2\frac{\sinh^2 k\ell}{\sinh^2\gamma\ell}\tanh\gamma\ell}{2\cosh 2k\ell + R_i\ell_i\frac{g(s)}{\gamma\ell}Y_{i+1}(s)\tanh\gamma\ell} \tag{3.35}$$

where g(s) is given by Equation (2.20) or (2.21), and here i = 1, 2, 3, ..., n.

Under the p-r conformal transformation (2.49), we have

$$y_i(w) \triangleq \frac{g(s)}{\gamma\ell}Y_i(s)$$

$$= \frac{2}{R_i\ell_i}\,\frac{2w\cosh 2k\ell + R_i\ell_i\, y_{i+1}(w) - 2\sinh^2 k\ell(1/w - w)}{2\cosh 2k\ell + R_i\ell_i\, y_{i+1}(w)\, w} \tag{3.36}$$

where $y_{i+1}(w) \triangleq \frac{g(s)}{\gamma\ell} Y_{i+1}(s)$

This is an LC d-p admittance function in the w-domain, because $Y_{i+1}(s) = \infty$ for a short-circuit termination, i.e., $y_{i+1}(w) = \infty$, and

$$y_i(w) = \frac{2}{R_i \ell_i} \frac{1}{w} \tag{3.37}$$

which is an inductive admittance in the w-domain.

From Equation (3.36),

$$y_i(1) = \frac{2}{R_i \ell_i} \tag{3.38}$$

$$y_{i+1}(w) = y_i(1) \frac{\cosh 2k\ell \left[y_i(w) - w\, y_i(1)\right] - y_i(1) \sinh^2 k\ell \,(1/w - w)}{y_i(1) - w\, y_i(w)}$$

$$= y_i(1) \cosh 2k\ell \frac{\left[y_i(w) - \frac{\cosh 2k\ell - 1}{2\cosh 2k\ell} \frac{y_i(1)}{w}\right] - w\left[y_i(1) - \frac{\cosh 2k\ell - 1}{2\cosh 2k\ell} y_i(1)\right]}{\left[y_i(1) - \frac{\cosh 2k\ell - 1}{2\cosh 2k\ell} y_i(1)\right] - w\left[y_i(w) - \frac{\cosh 2k\ell - 1}{2\cosh 2k\ell} \frac{y_i(1)}{w}\right]} \tag{3.39}$$

The term $\frac{\cosh 2k\ell - 1}{2 \cosh 2k\ell} \frac{y_i(1)}{w}$ realizes part of the pole of $y_i(w)$ at $w=0$. If the pole is completely removed, then $y_{i+1}(w)$ will have a zero at $w=0$ and this cannot be realized by the network under consideration. Therefore, it is necessary that

$$\left[w y_i(w)\right]\Big|_{w=0} > \frac{\cosh 2k\ell - 1}{2 \cosh 2k\ell} y_i(1) \tag{3.40}$$

This requirement may conflict with the requirements of the conjecture, as given by Equation (3.34), in which case the synthesis procedure breaks down. If the inequality is satisfied, then $\left[y_i(w) - \frac{\cosh 2k\ell - 1}{2 \cosh 2k\ell} \frac{y_i(1)}{w}\right]$ is a p-r function because $y_i(w)$ and $\frac{\cosh 2k\ell - 1}{2 \cosh 2k\ell} \frac{y_i(1)}{w}$ are p-r. Hence, by Richards' Theorem (see Equation (2.27)), $y_{i+1}(w)$ is a p.r. function, with $\alpha = 1$ and $\beta = y_i(1) \cosh 2k\ell$, a real positive constant.

Also, $y_{i+1}(w)$ is a realizable LC d-p admittance function because $y_i(w)$ is an LC d-p admittance function. Since the factor $(1-w^2)$ can be cancelled from the numerator and denominator of $y_{i+1}(w)$, $y_{i+1}(w)$ is of lower rank than $y_i(w)$.

Equation (3.34) may be rewritten as

$$\frac{1}{g(s)}\left[-k\ell \sinh 2k\ell \; y_i(1) + \frac{1}{R_i'''}\right] = 0 \qquad (3.41)$$

The synthesis procedure can now be stated.

3.4.1 Synthesis Procedure

Given: $k\ell$ and $\gamma\ell$, as specified by Equations (2.48), (2.49) and (3.4),

and $y_1(w)$, a d-p admittance function which satisfies the realizability conditions of Section 2.7.3 and where

$$\left[w y_1(w)\right]\Big|_{w=0} > \frac{\cosh 2k\ell - 1}{2 \cosh 2k\ell}\, y_1(1)$$

Step 1: From Equations (3.33), (3.38) and (3.41), $\frac{1}{R_1 \ell_1} = \frac{y_1(1)}{2}$

and $\frac{1}{R_1'''} = k\ell \sinh 2k\ell \; y_1(1)$ (3.42)

Hence, by Equations (2.48), (3.31) and (3.33), the parameters of the first set of sections in parallel and the lumped elements in shunt can be determined.

Step 2: From Equation (3.39), determine $y_{i+1}(w)$,

i.e.,

$$y_{i+1}(w) = y_i(1)\,\frac{\cosh 2k\ell\left[y_i(w) - w y_i(1)\right] - y_i(1)\,\sinh^2 k\ell\left(1 - w^2/w\right)}{y_i(1) - w\, y_i(w)} \qquad (3.43)$$

where $i = 1$, remembering to cancel the $(1-w^2)$ factor from the numerator and denominator.

Now, $$\left[w\ y_{i+1}(w)\right]\Big|_{w=0} > \frac{\cosh 2k\ell - 1}{2\cosh 2k\ell}\, y_i(1) \qquad (3.44)$$

must be satisfied. If the inequality is not satisfied, then the procedure breaks down and a fresh start with new $\gamma\ell$, $k\ell$ and $y_1(w)$ must be made. A smaller value of $k\ell$ should be used.

Step 3: From Equations (3.33), (3.38) and (3.41),

$$\frac{1}{R_{i+1}\ell_{i+1}} = \frac{y_{i+1}(1)}{2}$$

and $$\frac{1}{R_{i+1}} = k\ell \sinh 2k\ell\ y_{i+1}(1) \qquad (3.45)$$

Hence the parameters of the second set of sections in parallel and the lumped elements in shunt can be determined.

Step 4: Repeat Steps 2 and 3 for $i = 2, 3, \ldots,$ until $y_1(w)$ is completely realized. The last set of sections is short-circuit terminated.

The above synthesis procedure may be used for any value of the series inductance and shunt conductance of the $\overline{RC}$ sections. $\gamma\ell$ of Equation (2.48) and $g(s)$ of Equation (2.20) or (2.21) must be modified accordingly.

If the set of $\overline{RC}$ sections in parallel have equal lengths, i.e., Equations (3.24) apply, then the network configuration becomes that shown in Fig. 3.13.

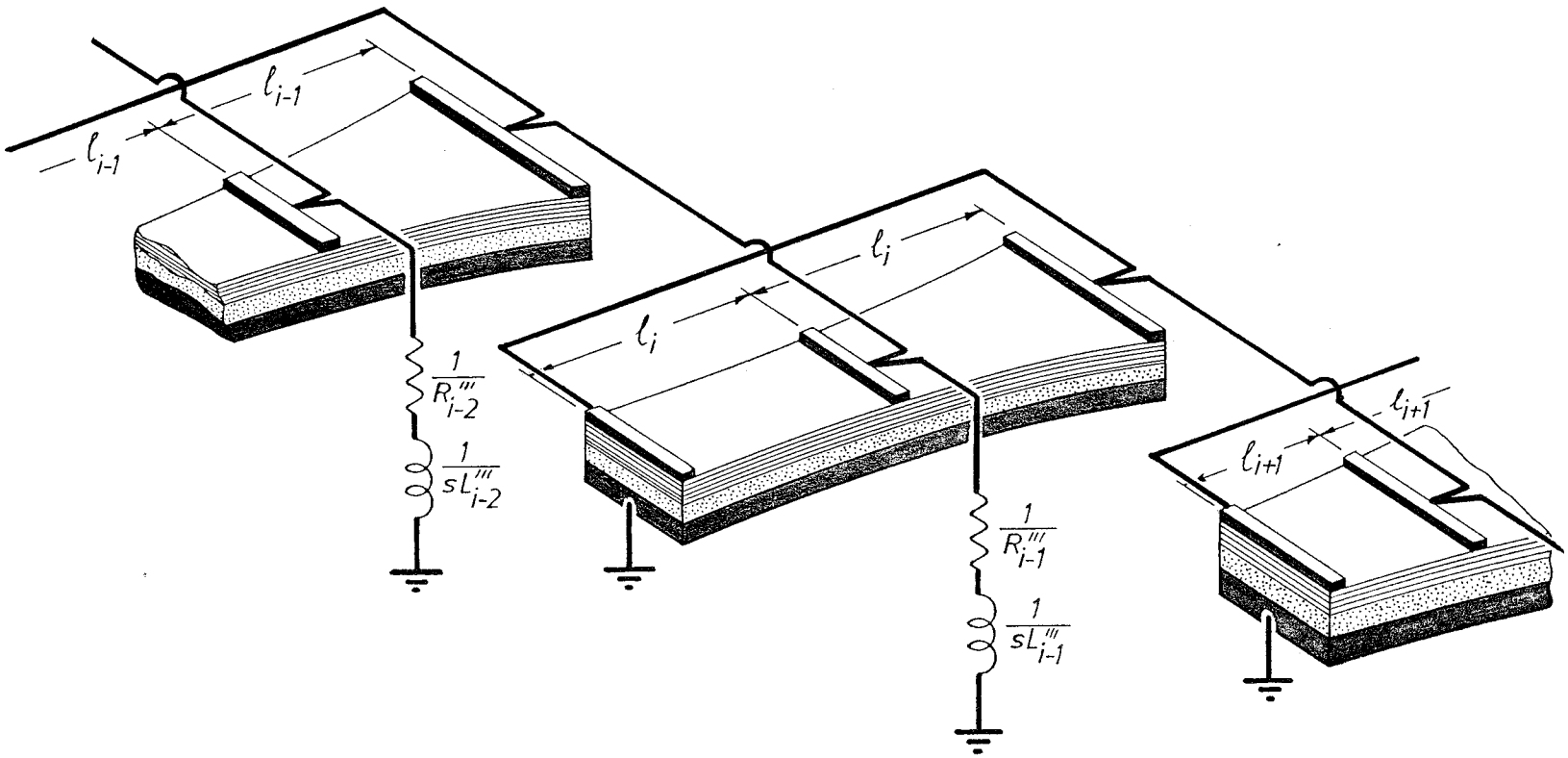

Fig. 3.13 - Alternative Configuration of Cascade of Sections in Parallel Together with Lumped Elements in Shunt.

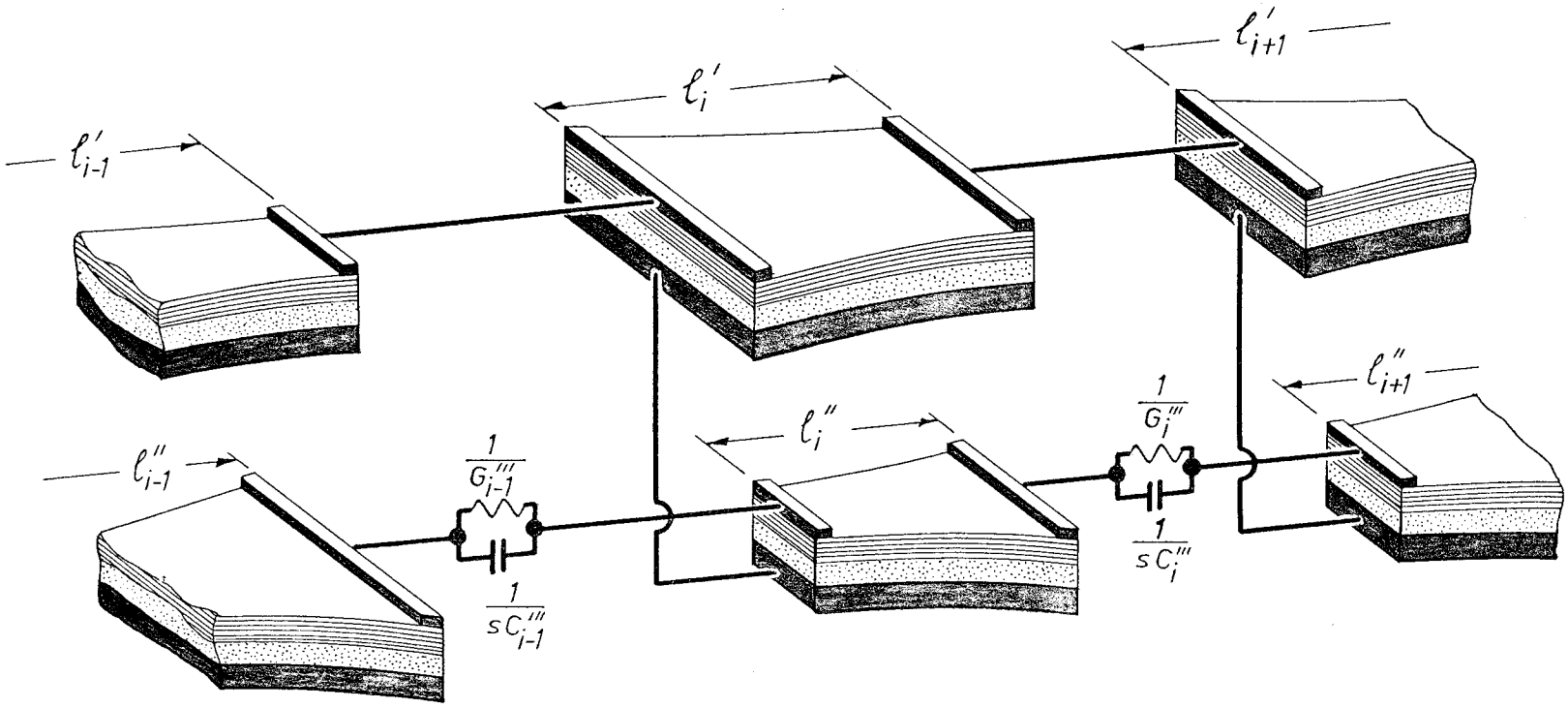

Fig. 3.14 - Cascade of Sections in Series Together with Lumped Elements in Series.

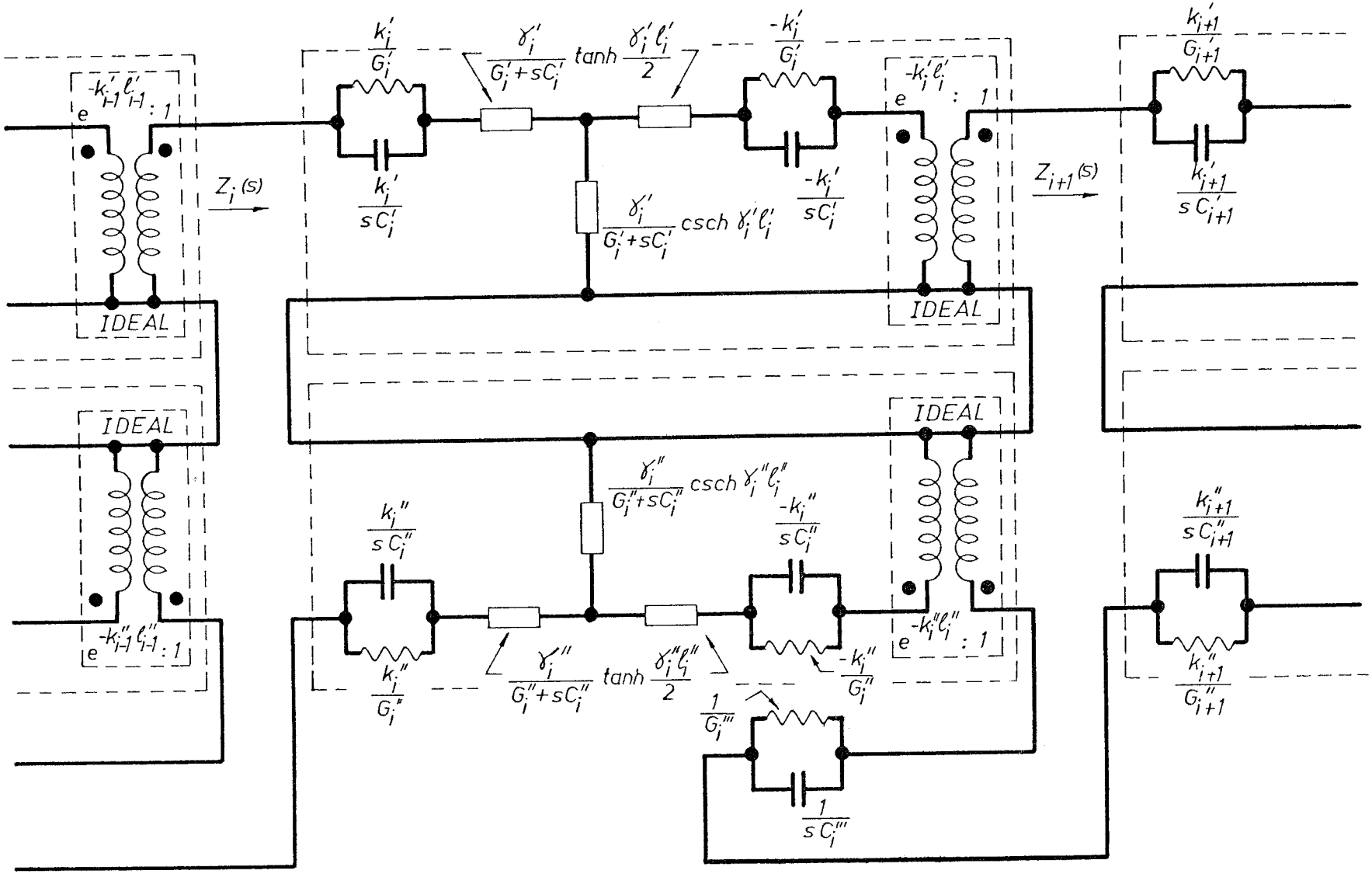

Fig. 3.15 - Equivalent Circuit of Cascade of Sections in Series Together with Lumped Elements in Series.

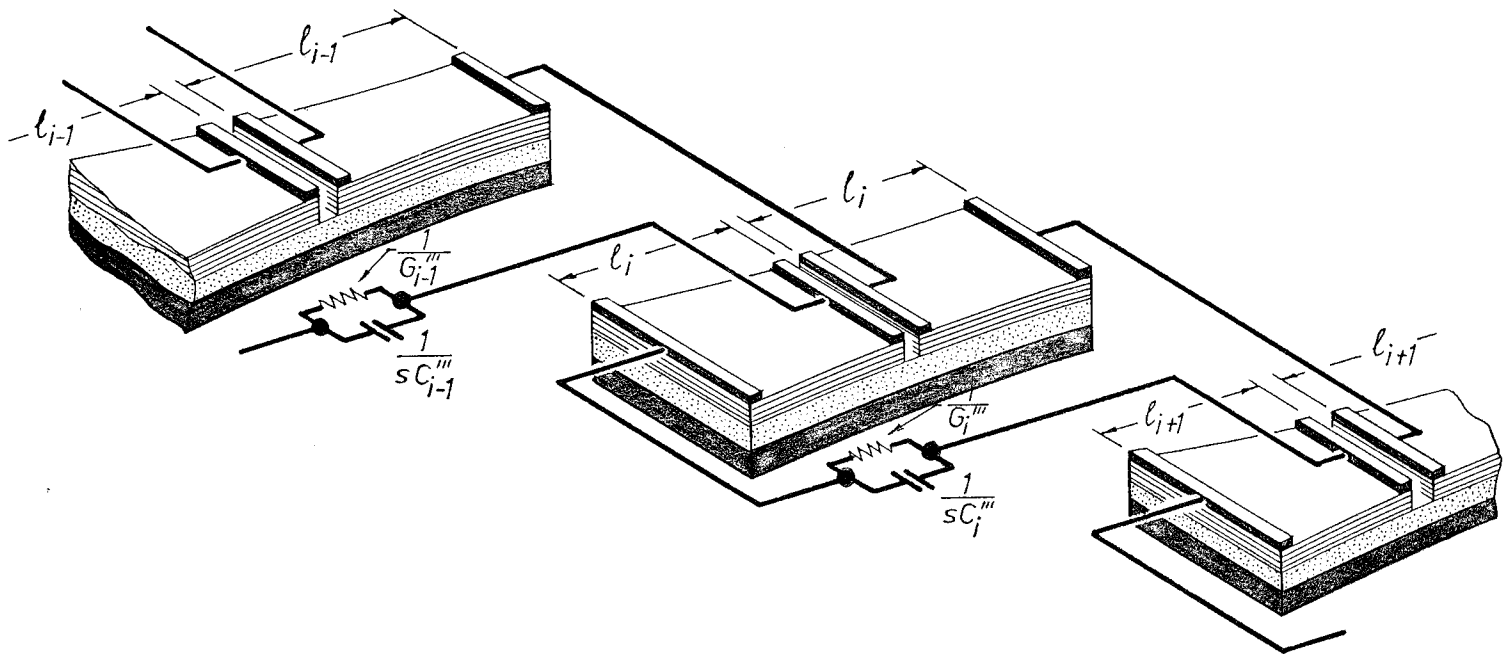

Fig. 3.16 - Alternative Configuration of Cascade of Sections in Series Together with Lumped Elements in Series.

3.5 A Synthesis Procedure for a Cascade of Sections in Series Together with Lumped Elements in Series.

Consider the network configuration of Fig. 3.14 with its cascade of $\overline{RC}$ sections in series together with lumped elements in series. The equivalent circuit is shown in Fig. 3.15.

This network is the "dual" of the configuration of Section 3.4. Therefore, the equations, synthesis procedure and remarks of Section 3.4 similarly apply except that

Z replaces Y,

z replaces y,

(G+sC) replaces (R+sL),

open-circuited replaces short-circuited,

series replaces shunt,

C_i replaces R_i,

$|k|$ replaces k except in Equation (3.31),

where k is negative,

and g(s) is given by Equation (2.22) or (2.23).

The network configuration "dual" to that of Fig. 3.13 is shown in Fig. 3.16.

3.6 Example

An example will now be worked out to illustrate the synthesis procedures. It will be assumed that the realization will use the network configuration of Section 3.2 and the synthesis procedure which minimizes the number of $\overline{RC}$ sections and lumped elements required.

Let the d-p admittance function $Y_1(s)$ be given by

$$Y_1(s) = \frac{\gamma\ell}{g(s)} \frac{(e^{4\gamma\ell}+1)(e^{4\gamma\ell}+e^{2\gamma\ell}+1)}{(e^{2\gamma\ell}+1)(e^{2\gamma\ell}-1)(e^{4\gamma\ell}+0.67e^{2\gamma\ell}+1)} \tag{3.46}$$

where $g(s)$ is given by Equation (2.20) or (2.21), so that under the p-r conformal transformation (2.49), we have

$$y_1(w) = \frac{g(s)}{\gamma\ell} Y_1(s)$$

$$= \frac{w^4 + 10\,w^2 + 9}{w\,(w^2 + 4)} \tag{3.47}$$

Now, $\left[wy_1(w)\right]\Big|_{w=0} = \frac{9}{4} = 2.25$

and $\frac{y_1(1)}{2} = \frac{20}{10} = 2.0$

i.e., $\left[wy_1(w)\right]\Big|_{w=0} > \frac{y_1(1)}{2}$ (3.48)

Therefore, $Y_1(s)$ satisfies the realizability conditions of Section 2.7.3.

Also, let $k\ell = 0.2$, i.e., $e^{2k\ell} = 1.4918$ (3.49)

From Equations (3.16)

$$\frac{1}{R_1'\ell_1'} = \frac{y_1(1)}{2} = 2.0$$

$$\frac{1}{R_1''\ell_1''} = \frac{y_1(1)}{2} = 2.0$$

$$\frac{1}{R_1'''} = 0 \tag{3.50}$$

and, $\frac{e^{2k\ell}}{R_1'\ell_1'} = 2.9836$ (3.51)

From Equation (3.17),

$$y_2(w) = 2.9836 \frac{(w^2 + 1.0)}{w(w^2 + 7.0)} \frac{\cancel{(1.0 - w^2)}}{\cancel{(1.0 - w^2)}} \tag{3.52}$$

i.e.,
$$\left[wy_2(w)\right]\Big|_{w=0} = 0.4262$$

$$y_2(1) = 0.7459$$

$$\frac{1}{2}\left[y_2(1) - \frac{e^{2k\ell}}{R_1'\ell_1'}\right] = -1.1188$$

and
$$\left[w\ y_2(w)\right]\Big|_{w=0} > \frac{1}{2}\left[y_2(1) - \frac{e^{2k\ell}}{R_1'\ell_1'}\right] \tag{3.53}$$

Thus, Inequality (3.18) is satisfied.

Since $y_2(1) < \frac{e^{2k\ell}}{R_1'\ell_1'}$, we have, from Equations (3.19),

$$\frac{1}{R_2'\ell_2'} = y_2(1) = 0.7459$$

$$\frac{1}{R_2''\ell_2''} = 0$$

$$\frac{1}{R_2'''} = k\ell\left[\frac{e^{2k\ell}}{R_1'\ell_1'} - y_2(1)\right] = 0.4475$$

and
$$\frac{e^{2k\ell}}{R_2'\ell_2'} = 1.1128 \tag{3.54}$$

From Equation (3.17),

$$y_3(w) = 0.3709 \frac{(w^2 + 4.0)}{w} \frac{\cancel{(1.0 - w^2)}}{\cancel{(1.0 - w^2)}} \tag{3.55}$$

i.e.,
$$\left[w\ y_3(w)\right]\Big|_{w=0} = 1.4836$$

$$y_3(1) = 1.8546$$

$$\frac{1}{2}\left[y_3(1) - \frac{e^{2k\ell}}{R_2'\ell_2'}\right] = 0.3709$$

and $$\left[w\ y_3(w)\right]\Big|_{w=0} > \frac{1}{2}\left[y_3(1) - \frac{e^{2k\ell}}{R_2'\ell_2'}\right] \tag{3.56}$$

Therefore, Inequality (3.18) is satisfied.

Since $y_3(1) > \frac{e^{2k\ell}}{R_2'\ell_2'}$, we have, from Equations (3.20),

$$\frac{1}{R_3'\ell_3'} = \frac{1}{2}\left[y_3(1) + \frac{e^{2k\ell}}{R_2'\ell_2'}\right] = 1.4837$$

$$\frac{1}{R_3''\ell_3''} = \frac{1}{2}\left[y_3(1) - \frac{e^{2k\ell}}{R_2'\ell_2'}\right] = 0.3709$$

$$\frac{1}{R_3'''} = 0$$

and $$\frac{e^{2k\ell}}{R_3'\ell_3'} = 2.2134 \tag{3.57}$$

From Equation (3.17),

$$y_4(w) = 6.6402\ \frac{\cancel{(1.0 - w^2)}}{w\cancel{(1.0 - w^2)}} \tag{3.58}$$

i.e. $$\left[w\ y_4(w)\right]\Big|_{w=0} = 6.6402$$

$$y_4(1) = 6.6402$$

$$\frac{1}{2}\left[y_4(1) - \frac{e^{2k\ell}}{R_3'\ell_3'}\right] = 2.2134$$

and $$\left[w\ y_4(w)\right]\Big|_{w=0} > \frac{1}{2}\left[y_4(1) - \frac{e^{2k\ell}}{R_3'\ell_3'}\right] \tag{3.59}$$

Therefore, Inequality (3.18) is satisfied.

Using the realization (iii) of Step 5 in the synthesis procedure of Section 3.2.1.1, i.e., using Equations (3.21), we have

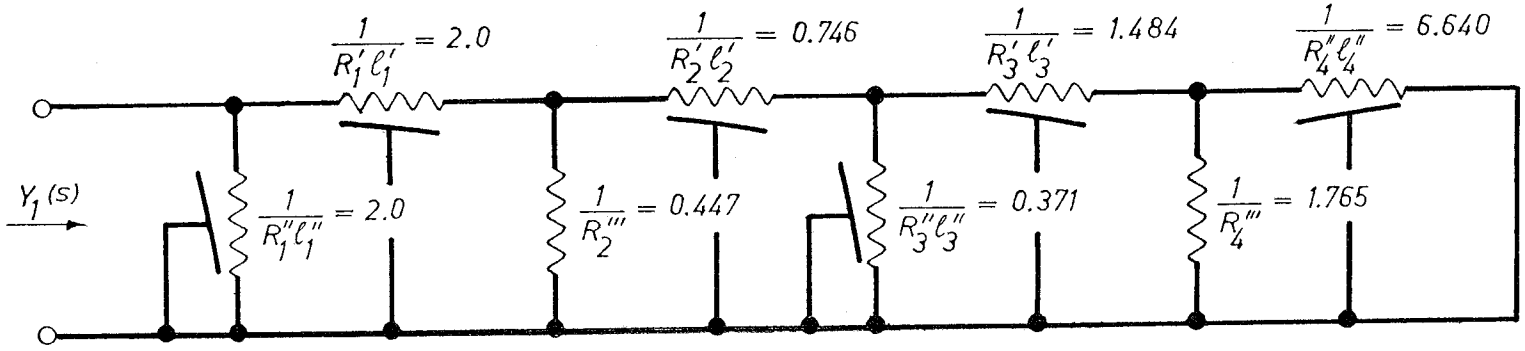

$$k_1'\ell_1' = -k_1''\ell_1'' = k_2'\ell_2' = \ldots\ldots = -0.2$$

Fig. 3.17 - Network Realization.

$$\frac{1}{R_4'\ell_4'} = 0$$

$$\frac{1}{R_4''\ell_4''} = y_4(1) = 6.6402$$

$$\frac{1}{R_4'''} = k\ell\left[\frac{e^{2k\ell}}{R_3'\ell_3'} + y_4(1)\right] = 1.7647 \qquad (3.60)$$

Hence, depending upon the function $\gamma\ell$ and the frequency and magnitude scaling used, the parameters of the exponential $\overline{RC}$ sections and the lumped elements required in the realization can be determined through Equations (2.48), (3.4), (3.50), (3.54), (3.57) and (3.60). Fig. 3.17 shows the configuration of the network realization.

3.7 Discussion

The synthesis procedures that have been developed for some cascade network configurations of exponential $\overline{RC}$ sections and lumped elements demonstrate the sufficiency part of the conjecture discussed in Chapter 2. The conjecture requires the removal of the rational terms in the immittance parameters of the $\overline{RC}$ sections. This has been achieved in the configurations discussed by the use of extra $\overline{RC}$ sections in parallel (or series), or as stubs, with the main $\overline{RC}$ sections, and the use of lumped elements. The synthesis procedures, however, break down when the extra $\overline{RC}$ sections to be realized are such that they require poles at the origin (in the w-domain) with residues larger than actually exist. In these cases, new immittance functions must be specified and the synthesis

procedures repeated.

The synthesis procedures and the network realizations reduce to Wyndrum's procedures for uniform $\overline{RC}$ networks when the taper constants of the exponential $\overline{RC}$ sections are zero. Then the constraints of the conjecture no longer apply.

The realizations of Sections 3.2 and 3.4 are preferable to those of Sections 3.3 and 3.5 for thin-film networks because of the common connection between all $\overline{RC}$ sections and lumped elements.

The synthesis procedures are applicable to other distributed-parameter systems described by similar characterizing equations, and may be extended to the synthesis of other non-uniform distributed RC networks by replacing each of the exponential $\overline{RC}$ sections with an equivalent section through the equivalences of Schwartz[18] or Hellstrom[17].

4. THE APPROXIMATION PROBLEM

4.1 Introduction

To realize a d-p immittance function by a network of exponential $\overline{RC}$ sections, the immittance function must be approximated by a function of exponential polynomials of the form given by Equation (2.63). One of the synthesis procedures of Chapter 3 can then be used to determine the parameter values of the exponential $\overline{RC}$ sections and lumped elements.

4.2 Functions of Exponential Polynomials

As shown in Section 2.7.3, a d-p immittance function F(s) can be realized by a network of exponential $\overline{RC}$ sections (provided the rational terms in the immittance parameters of each $\overline{RC}$ section can be eliminated) if and only if it can be expressed as

$$F(s) = K \frac{\gamma\ell}{g(s)} \frac{(e^{2\gamma\ell}+1)^{2(m-p)+1}}{(e^{2\gamma\ell}-1)} \frac{\prod_{j=1}^{p}(e^{4\gamma\ell}+N_j e^{2\gamma\ell}+1)}{\prod_{j=1}^{m}(e^{4\gamma\ell}+D_j e^{2\gamma\ell}+1)} \tag{4.1}$$

where K is a real positive constant,

$\gamma\ell$ is given by Equation (2.48),

g(s) is given by Equations (2.20)-(2.23),

$m = p$ or $m = p-1$,

$|N_j|, |D_j| < 2$,

$D_j > N_j$,

and only one coefficient in the set of N_j and D_j may be zero.

For real frequencies, $s = j\omega$.

A specified d-p immittance function in the form of a magnitude-frequency characteristic curve, or a phase-frequency curve, or both, must be approximated by a function of the form given by Equation (4.1) to be realizable by an exponential $\overline{RC}$ network. The closeness of fit, i.e., the criterion of "best" approximation, is at the discretion of the circuit designer and depends upon the problem at hand.

Wyndrum[13] has plotted sets of normalized magnitude-frequency curves of the various exponential polynomial factors that appear in Equation (4.1) for uniform $\overline{RC}$ networks with negligible series inductance and shunt conductance. For exponential $\overline{RC}$ networks, this would involve plotting sets of normalized curves of the various exponential polynomial factors for many values of the normalized taper constant. Such curves would be rather tedious to use in any design problem. Therefore, the use of a digital computer with plotting facilities would make it easier to approximate any specified d-p immittance function.

The approximated d-p immittance function F(s) is then transformed by Equation (2.49) as follows:

$$f(w) \triangleq \frac{g(s)}{\gamma\ell} F(s)$$

$$= \frac{K'}{w} \frac{\prod_{j=1}^{p} (w^2+n_j)}{\prod_{j=1}^{m} (w^2+d_j)} \qquad (4.2)$$

$$\text{where } K' = K\, 2^{2(m-p)} \frac{\prod_{j=1}^{p}(2-N_j)}{\prod_{j=1}^{m}(2-D_j)}$$

$$n_j = \frac{2 + N_j}{2 - N_j}$$

$$\text{and} \quad d_j = \frac{2 + D_j}{2 - D_j} \tag{4.3}$$

The transformed d-p immittance function f(w) can then be realized by one of the synthesis procedures of Chapter 3. If f(w) is an admittance function, the procedure of Section 3.2 or 3.4 may be used, and if f(w) is an impedance function, that of Section 3.3 or 3.5 may be used.

4.3 Examples

Two examples will be described to illustrate the proposed synthesis procedures.

A FORTRAN IV program has been written for an IBM 7040 digital computer to handle the problem of realizing d-p immittance functions by exponential $\overline{RC}$ networks. The program consists of a mainline and four subroutines. Printed output of the magnitude- and phase-frequency characteristics, and the network realization, together with magnitude- and phase-frequency plots can be obtained with the program. The series inductance and shunt conductance of the $\overline{RC}$ sections are assumed to be zero, and the network realization uses the configuration of Section 3.4 or 3.5, or of Section 3.2 or 3.3.

4.3.1 Example No. 1

The d-p impedance function to be realized in this example is given by the normalized magnitude-frequency specification, shown in Fig. 4.1, with -6 db/octave segments and break frequencies of 0.065 and 2.0 rad./sec. for the frequency range of 0.01 to 10.0 rad./sec. This function, except for the difference in frequency normalization by a factor of one-half, is that used by Wyndrum[13-15].

The specified impedance function can be approximated by a rational function

$$Z_a(s) = 0.0501 \frac{(15.38s + 1.0)}{s(0.50s + 1.0)} \tag{4.4}$$

Wyndrum's approximation is

$$Z_b(s) = 0.7071 \frac{\gamma\ell\,(e^{2\gamma\ell}+1)\;(e^{4\gamma\ell}-1.9e^{2\gamma\ell}+1)}{s(e^{2\gamma\ell}-1)\;(e^{4\gamma\ell}+e^{2\gamma\ell}+1)} \tag{4.5}$$

where $\gamma\ell \triangleq \sqrt{sRC}\,\ell$, $RC = \ell = 1$ and the factor of 0.7071 accounts for the different frequency normalization used.

A possible approximation for realization by an exponential $\overline{RC}$ network is

$$Z_c(s) = 0.68 \frac{\gamma\ell\,(e^{2\gamma\ell}+1)\;(e^{4\gamma\ell}-1.76e^{2\gamma\ell}+1)}{s(e^{2\gamma\ell}-1)\;(e^{4\gamma\ell}+1.6e^{2\gamma\ell}+1)} \tag{4.6}$$

where $\gamma\ell \triangleq \sqrt{k^2+sRC}\,\ell$

$RC = \ell = 1$

and $k\ell = -0.09$

Another possible approximation for realization by an exponential $\overline{RC}$ network is

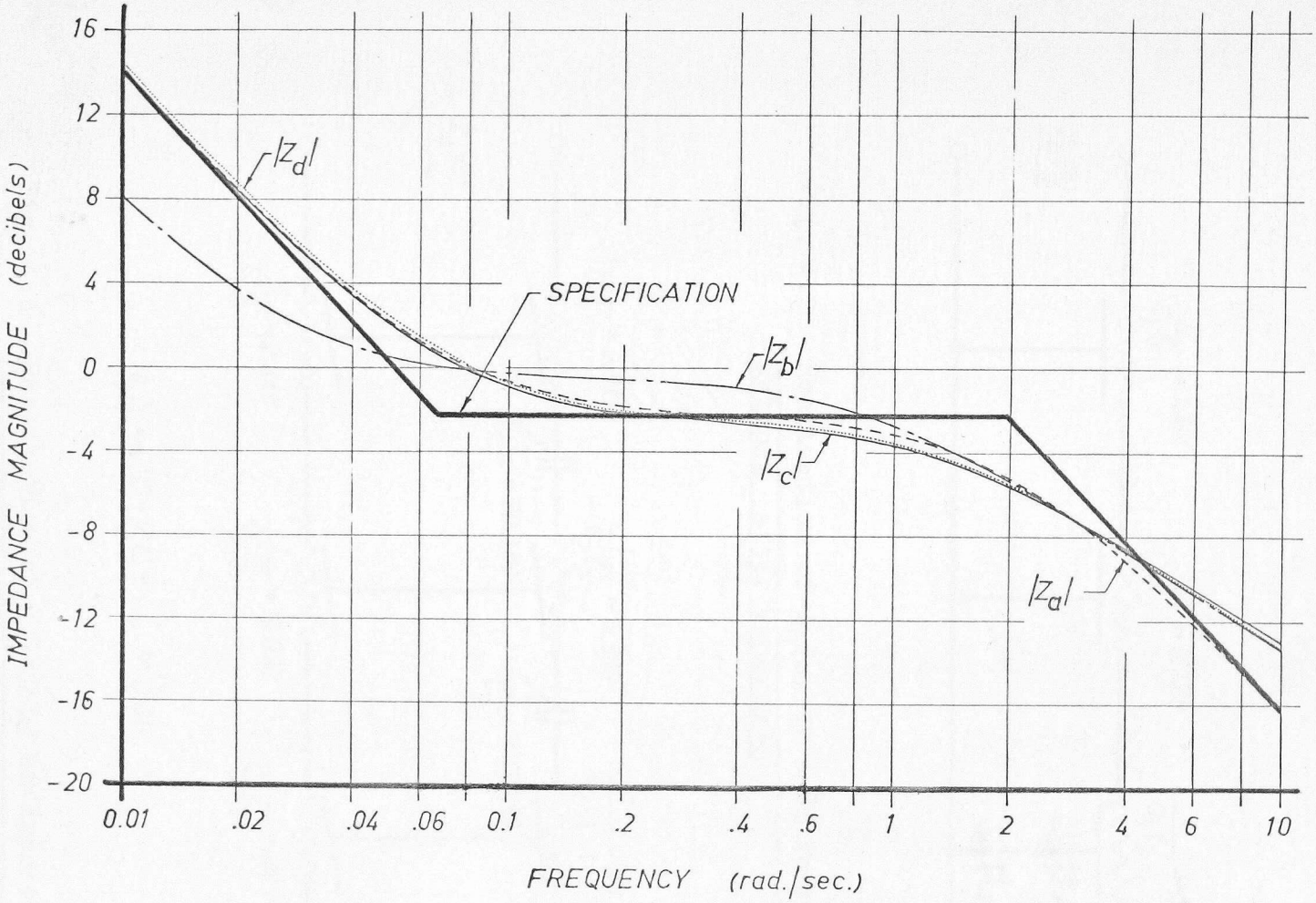

Fig. 4.1 - Magnitude-Frequency Curves for Synthesis Example No. 1.

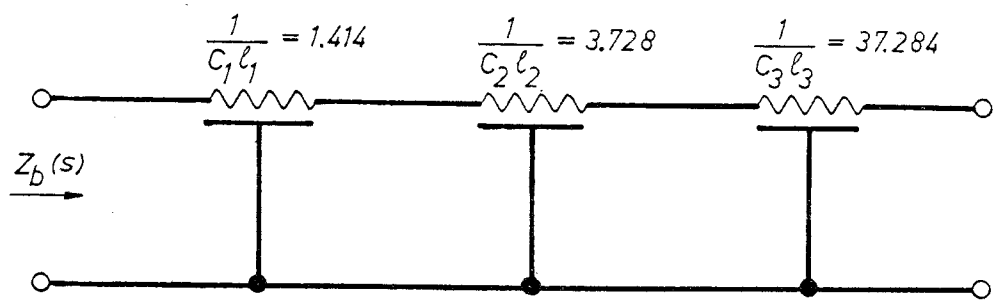

Fig. 4.2 - Realization of $Z_b(s)$ by a Uniform $\overline{RC}$ Network (after Wyndrum).

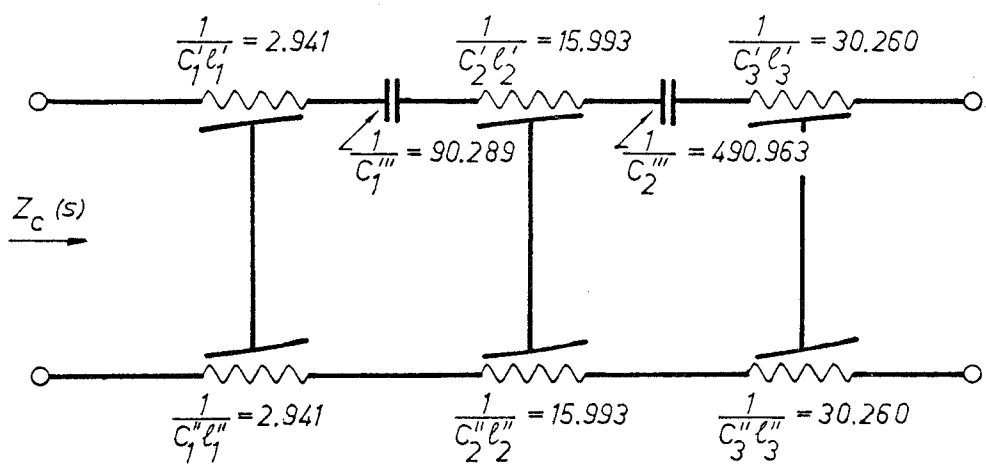

$$k_1' \ell_1' = -k_1'' \ell_1'' = k_2' \ell_2' = \ldots\ldots = 0.09$$

Fig. 4.3 - Realization of $Z_c(s)$ by an Exponential $\overline{RC}$ Network.

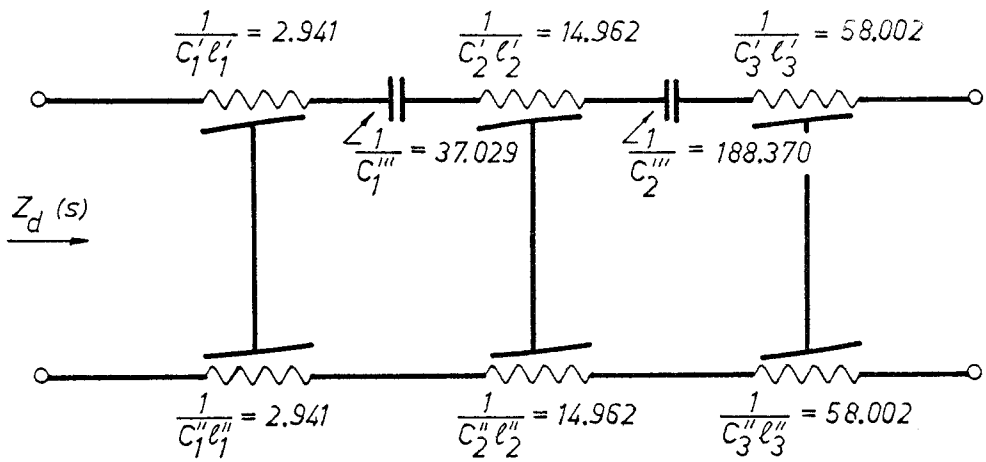

$$k_1'\ell_1' = -k_1''\ell_1'' = k_2'\ell_2' = \ldots\ldots = 0.14$$

Fig. 4.4 - Realization of $Z_d(s)$ by an Exponential RC Network.

$$Z_d(s) = 0.68 \frac{\gamma\ell\,(e^{2\gamma\ell}+1)\,(e^{4\gamma\ell}-1.8e^{2\gamma\ell}+1)}{s(e^{2\gamma\ell}-1)\,(e^{4\gamma\ell}+1.5e^{2\gamma\ell}+1)} \qquad (4.7)$$

where $\gamma\ell \triangleq \sqrt{k^2+sRC}\;\ell$

$RC = \ell = 1$

and $k\ell = -0.14$

To obtain the approximations (4.6) and (4.7), the value of $k\ell$ is first chosen, followed by adjustment of the coefficients of the exponential polynomials and of the multiplier constant for the best fit, in the least square sense, to the magnitude-frequency specification.

The magnitude-frequency characteristics of Z_a, Z_b, Z_c and Z_d are shown in Fig. 4.1, and the network realizations of Z_b, Z_c and Z_d by $\overline{RC}$ networks are given by Figs. 4.2, 4.3, and 4.4, respectively.

Hence, depending upon the magnitude and frequency scaling used, the parameters of the actual networks of $\overline{RC}$ sections and lumped elements can be determined.

Note that the magnitude-frequency characteristics become asymptotic at low and high frequencies. For all $\overline{RC}$ networks, with negligible series inductance and shunt conductance and with open-circuit terminations, the slopes of the low- and high-frequency asymptotes are -6 db/octave and -3 db/octave, respectively.

4.3.2 Example No. 2

The d-p impedance function to be realized here is given by the normalized magnitude-frequency specification,

shown in Fig. 4.5, with a -3 db/octave segment and a break frequency of 0.4 rad./sec. for the frequency range of 0.01 to 10.0 rad./sec. For this class of d-p impedance functions, the short-circuited $\overline{RC}$ network configuration of Section 3.4 must be used to realize the finite low-frequency impedance.

The specified d-p impedance function, for realization by a uniform $\overline{RC}$ network, can be approximated by $\frac{1}{Y_b(s)}$ where

$$Y_b(s) = 1.60 \frac{\gamma\ell\,(e^{4\gamma\ell}+0.5e^{2\gamma\ell}+1)}{(e^{2\gamma\ell}-1)\,(e^{2\gamma\ell}+1)} \tag{4.8}$$

$$\gamma\ell \triangleq \sqrt{sRC}\,\ell$$

$$RC = \ell = 1$$

and $$k\ell = 0.$$

A possible approximation for realization by an exponential $\overline{RC}$ network is $\frac{1}{Y_c(s)}$ where

$$Y_c(s) = 1.59 \frac{\gamma\ell\,(e^{4\gamma\ell}+0.5e^{2\gamma\ell}+1)}{(e^{2\gamma\ell}-1)\,(e^{2\gamma\ell}+1)} \tag{4.9}$$

$$\gamma\ell \triangleq \sqrt{k^2+sRC}\,\ell$$

$$RC = \ell = 1$$

and $$k\ell = 0.10$$

Another possible approximation for realization by an exponential $\overline{RC}$ network is $\frac{1}{Y_d(s)}$ where

$$Y_d(s) = 1.54 \frac{\gamma\ell\,(e^{4\gamma\ell}+0.5e^{2\gamma\ell}+1)}{(e^{2\gamma\ell}-1)\,(e^{2\gamma\ell}+1)} \tag{4.10}$$

$$\gamma\ell \triangleq \sqrt{k^2+sRC}\,\ell$$

$$RC = \ell = 1$$

and $$k\ell = 0.20$$

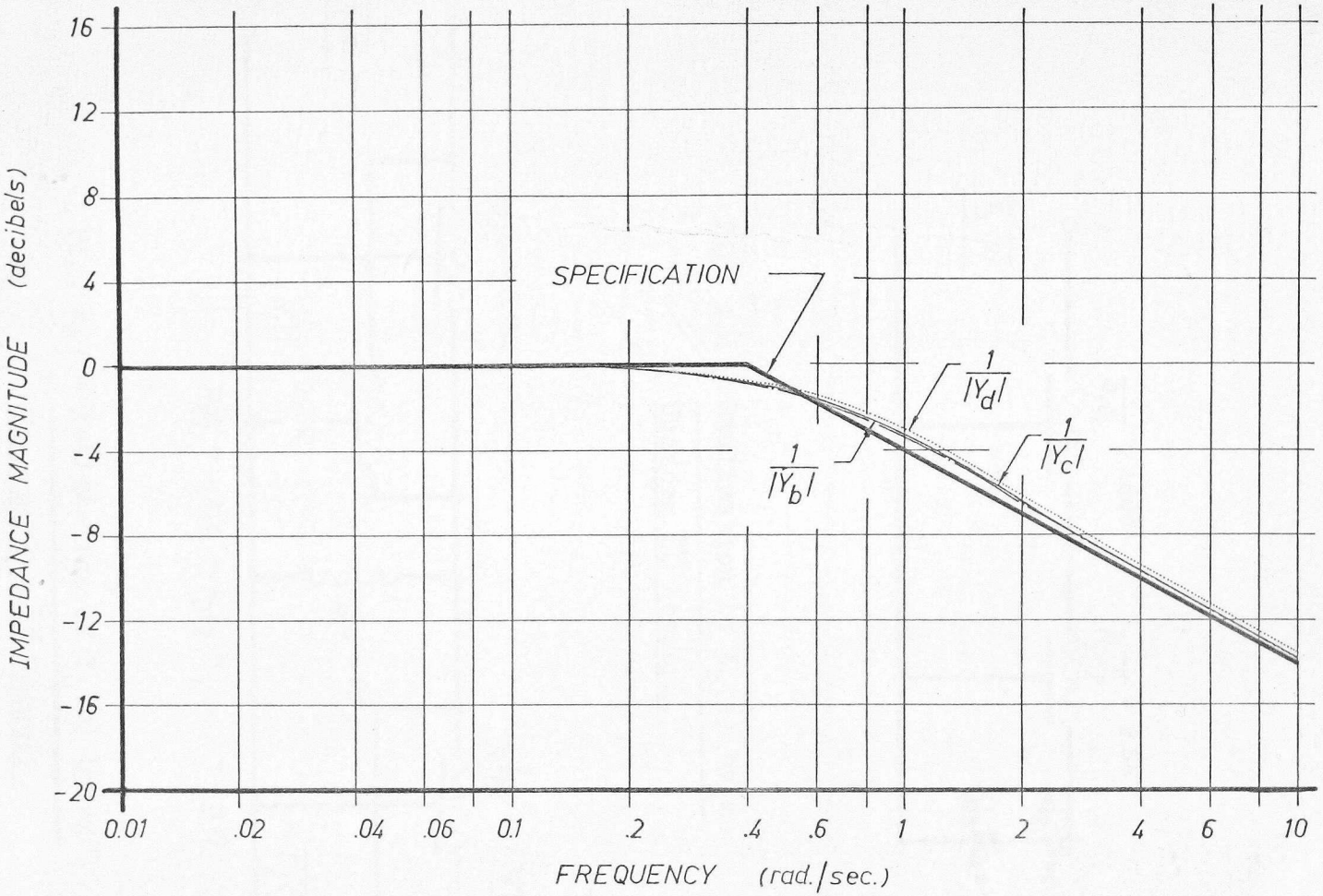

Fig. 4.5 - Magnitude-Frequency Curves for Synthesis Example No. 2.

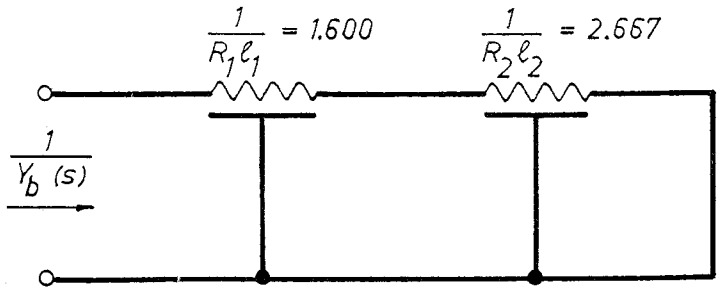

Fig. 4.6 - Realization of $Y_b(s)$ by a Uniform $\overline{RC}$ Network.

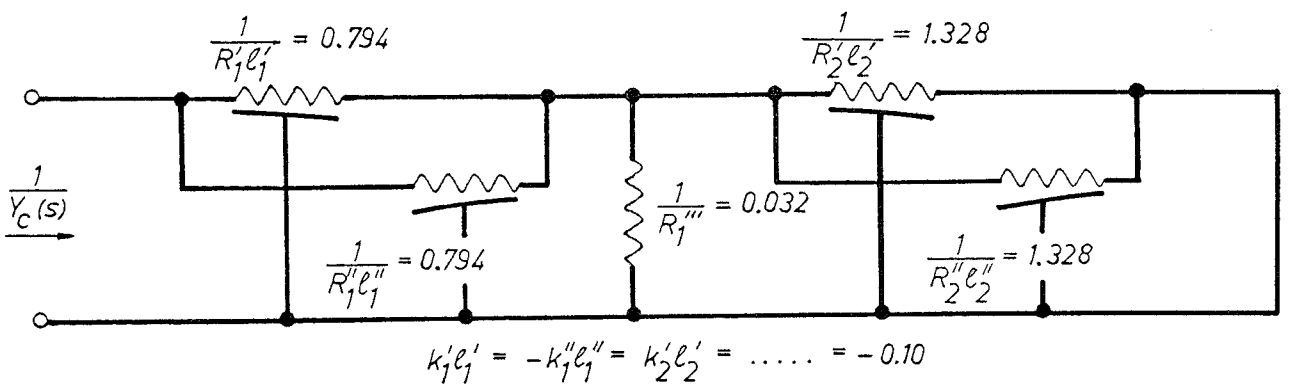

Fig. 4.7 - Realization of $Y_c(s)$ by an Exponential $\overline{RC}$ Network.

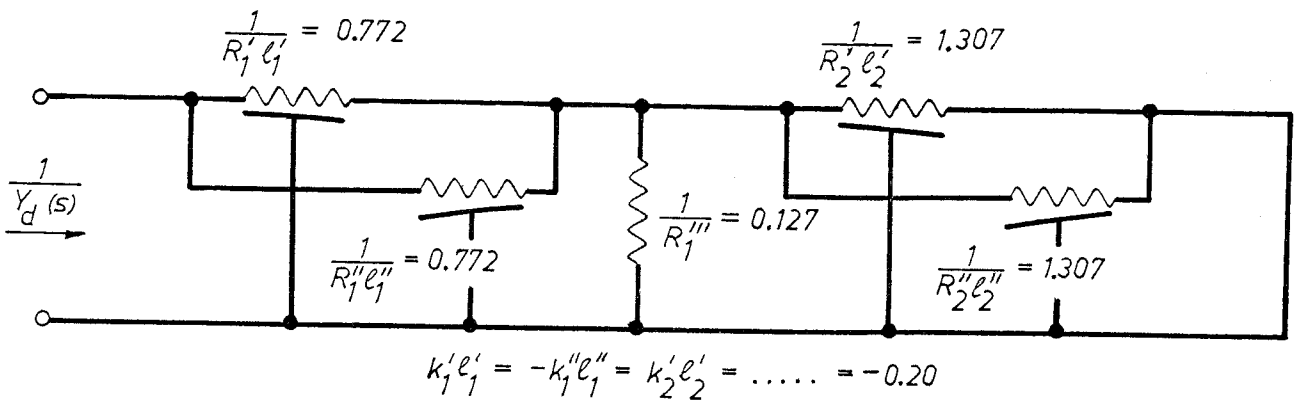

Fig. 4.8 - Realization of $Y_d(s)$ by an Exponential $\overline{RC}$ Network.

The same procedure as that used in Example No. 1 was followed to obtain the above approximations. It was found that the same coefficient values of exponential polynomials could be used for all the approximations.

The magnitude-frequency characteristics of these approximations are shown in Fig. 4.5, and their network realizations are given by Figs. 4.6-4.8.

The parameters of the actual networks of $\overline{RC}$ sections and lumped elements can then be determined by taking into account the frequency and magnitude normalizations.

4.4 Discussion

The network realizations of Sections 3.4 and 3.5 have been found to be more useful in realizing d-p immittance functions than those of Sections 3.2 and 3.3 because the restriction imposed by the conjecture of Chapter 2, i.e., Inequality (3.44), can be satisfied by making the taper constant of the $\overline{RC}$ sections sufficiently small, whereas Inequality (3.11) is independent of the taper constant.

In the above examples, it is seen that the exponential $\overline{RC}$ network realizations require additional $\overline{RC}$ sections and lumped elements when compared with the uniform $\overline{RC}$ network realizations. It is possible to reduce the number of these additional $\overline{RC}$ sections and lumped elements by suitably combining the simple cascade realization of Section 3.1, the cascade-and-stub realization of Section 3.2 or 3.3, and the realization of Section 3.4 or 3.5. Lumped elements can be avoided by using stub sections instead with the configuration

of Section 3.4 or 3.5.

The exponential $\overline{RC}$ network is capable of approximating a specified d-p immittance function in the same manner as the uniform $\overline{RC}$ network. In fact, a number of different exponential $\overline{RC}$ networks with various values of taper constant can be obtained that will yield similar d-p immittance functions. This has been illustrated in the above examples. Preliminary results indicate that the exponential $\overline{RC}$ network realizations tend to occupy less area than the uniform $\overline{RC}$ network. In cases investigated so far, the ratio of area needed for exponential $\overline{RC}$ network realizations to area needed for uniform $\overline{RC}$ network realizations is approximately 0.87 and 0.85 for the two alternatives in Example No. 1, and 0.99 and 0.97 in Example No. 2.

Even if the lumped elements are not considered, the open-circuited and short-circuited exponential $\overline{RC}$ sections of Figs. 3.3 and 3.4, respectively, do not form a dual set of lumped capacitance and inductance in the w-domain because different premultiplying factors are used prior to transformation of the d-p immittances into the w-domain. Thus, Cauer and Foster synthesis procedures, in the w-domain, cannot be applied to the synthesis of exponential $\overline{RC}$ networks.

Limited use of the proposed synthesis procedures seems to indicate that the restrictions imposed by the conjecture of Chapter 2, through Inequalities (3.11) and (3.44), are always satisfied in any realization, provided that the inequalities and the realizability conditions are satisfied at the start of the realization. No proof of this has been found.

5. CONCLUSIONS

The synthesis procedure proposed by Wyndrum for the realization of driving-point immittance functions by uniform distributed RC networks has been extended to the realization by exponentially-tapered distributed RC networks.

The synthesis technique involves the approximation to a specified driving-point immittance function by a function of exponential polynomials. The function of exponential polynomials must satisfy the realizability conditions for exponentially-tapered distributed RC networks and the condition given by Inequality (3.11) or (3.44). A positive-real conformal transformation is then used to change the synthesis problem into a lumped-parameter problem so that well-known cascade synthesis procedures can be applied. The network realizations are in the form of cascades of exponentially-tapered distributed RC sections with extra distributed RC sections and lumped elements added to satisfy the constraints imposed by the conjecture of Section 2.7.

The exponentially-tapered distributed RC network can realize driving-point immittance functions similar to those of uniform distributed RC networks, with the advantages that alternative realizations can be obtained by using different taper constants and that less area is occupied, and the disadvantage that more sections are required as a consequence of the conjecture.

It has been shown that the removal of the lumped ele-

ments from the equivalent circuits of exponentially-tapered distributed RC networks is a sufficient condition for the development of a synthesis procedure for the realization of driving-point immittance functions. That this is a necessary condition has not been proven: it remains to be investigated further.

A driving-point immittance function that satisfies, at the start of the synthesis procedure, the realizability conditions for exponentially-tapered distributed RC networks and the condition given by Inequality (3.11) or (3.44) is not guaranteed to be realizable. The possibility of including these inequalities in the realizability conditions merits further investigation.

It has been assumed that the effective width at any point of a tapered transmission line is that of the resistive film and that modulation of this width with respect to the axial coordinate produces resistance and capacitance taper functions which are reciprocal. Experimental verification of the above and of the proposed distributed RC network realizations of driving-point immittance functions remains to be done.

No consideration has been given in this dissertation to the use of purely numerical techniques to determine a distributed RC network with a driving-point immittance function that will minimize some specific error criterion with respect to a specified driving-point function. Emphasis has been placed on the closed-form solution to the problem.

REFERENCES

1. Mulligan, J.H., "The Role of Network Theory in Solid-State Electronics - Accomplishments and Future Challenges", IEEE Trans. on Circuit Theory, Vol. CT-10, pp. 323-332, September, 1963.

2. Castro, P.S., and Happ, W.W., "Distributed Parameter Circuits and Microsystem Electronics", Proc. NEC, Vol. 16, pp. 448-460, 1960.

3. Happ, W.W., Castro, P.S., and Fuller, W.D., "Synthesis of Solid State Distributed Parameter Functions", IRE International Convention Record, Vol. 10, Part 6, pp. 262-278, 1962.

4. Kelly, J.J., and Ghansi, M.S., "On the Dominant Poles of the Distributed RC Networks", Technical Report 400-92, Dept. of Electrical Engineering, New York University, March, 1964.

5. Heizer, K.W., "Distributed RC Networks with Rational Transfer Functions", Doctoral Dissertation, University of Illinois, 1962.

6. Heizer, K.W., "Distributed RC Networks with Rational Transfer Functions", IRE Trans. on Circuit Theory, Vol. CT-9, pp. 356-362, December, 1962.

7. Heizer, K.W., "Rational Parameters with Distributed Networks", correspondence, IEEE Trans. on Circuit Theory, Vol. CT-10, pp. 531-532, December, 1963.

8. Barker, D.G., "Synthesis of Active Filters Employing Thin Film Distributed Parameter Networks", IEEE International Convention Record, Vol. 13, Part 7, pp. 119-126, 1965.

9. Woo, B.B., and Hove, R.G., "Synthesis of Rational Transfer Functions with Thin-Film Distributed Parameter RC Active Networks", Proc. NEC, Vol. 21, pp. 241-246, 1965.

10. Fu, Y., and Fu, J.S., "n-Port Rectangular-Shaped Distributed RC Networks", correspondence, IEEE Trans. on Circuit Theory, Vol. CT-13, pp. 222-225, June, 1966.

11. Hesselberth, C.A., "Synthesis of Some Distributed RC Networks", Report R-164, Coordinated Science Laboratory, University of Illinois, August, 1963.

12. Wyndrum, R.W., "The Synthesis of Distributed $\overline{RC}$ Networks", Technical Report 400-72, Dept. of Electrical Engineering, New York University, December, 1962.

13. Wyndrum, R.W., "The Exact Synthesis of Distributed RC Networks", Technical Report 400-76, Dept. of Electrical Engineering, New York University, May, 1963.

14. Wyndrum, R.W., "The Exact Realization of Distributed RC Driving Point Functions", Wescon Convention Technical Papers, Vol. 8, Part 2, Paper 18.1, 1964.

15. Wyndrum, R.W., "The Realization of Monomorphic Thin Film Distributed RC Networks", IEEE International Convention Record, Vol. 13, Part 10, pp. 90-95, 1965.

16. O'Shea, R.P., "Synthesis Using Distributed RC Networks", IEEE International Convention Record, Vol. 13, Part 7, pp. 18-29, 1965. Also IEEE Trans. on Circuit Theory, Vol. CT-12, pp. 546-554, December, 1965.

17. Hellstrom, M.J. "Equivalent Distributed RC Networks or Transmission Lines", IRE Trans. on Circuit Theory, Vol. CT-9, pp. 247-251, September, 1962.

18. Schwartz, R.F., "Transformations in the Analysis of Non-Uniform Transmission Lines", J. Franklin Inst., Vol. 278, pp. 163-172, September, 1964.

19. Wilson, B.L.H., and Wilson, R.B., "Shaping of Distributed RC Networks", correspondence, Proc. IRE, Vol. 49, pp. 1330-1331, August, 1961.

20. Woo, B.B., and Bartlemay, J.M., "Characteristics and Applications of a Tapered Thin Film Distributed Parameter Structure", IEEE International Convention Record, Vol. 11, Part 2, pp. 56-75, 1963.

21. Stewart, J.L., Circuit Analysis of Transmission Lines, J. Wiley & Sons, Inc., New York, 1958, pp. 107-113.

22. Kober, H., Dictionary of Conformal Representations, Dover Publications, Inc., New York, 1952, pp. 88-90.

23. Richards, P.I. "A Special Class of Functions with Positive Real Part in a Half-Plane", Duke Mathematical Journal, Vol. 14, pp. 717-786, September, 1947.

24. Richards, P.I., "Resistor-Transmission-Line Circuits", Proc. IRE, Vol. 30, pp. 217-220, February, 1948.