THE NUCLEAR QUADRUPOLE RESONANCE OF B^{11} IN INDERITE

by

Darshan Singh Sahri

A THESIS SUBMITTED IN PARTIAL FULFILMENT

OF THE REQUIREMENTS FOR THE DEGREE OF

MASTER OF SCIENCE

in the Department

of

PHYSICS

We accept this thesis as conforming

to the required standard:

THE UNIVERSITY OF BRITISH COLUMBIA
May, 1962

In presenting this thesis in partial fulfilment of the requirements for an advanced degree at the University of British Columbia, I agree that the Library shall make it freely available for reference and study. I further agree that permission for extensive copying of this thesis for scholarly purposes may be granted by the Head of my Department or by his representatives. It is understood that copying or publication of this thesis for financial gain shall not be allowed without my written permission.

Department of Physics.

The University of British Columbia,
Vancouver 8, Canada.

Date May 8, 1962.

ABSTRACT

This work was undertaken to verify the results of Pennington and Petch. They studied the effect of quadrupole perturbation on the n.m.r. spectrum of B^{11} in inderite and from these studies found the values of quadrupole coupling constants and asymmetry parameters of the crystalline electrostatic fields for different sites of B^{11}. This data has been used in the present work to predict the "pure" quadrupole resonance frequencies. The resonance frequency for the M site has been experimentally measured. The result is within 1% of the predicted value. The improvements made in the spectrometers are discussed.

CONTENTS

ILLUSTRATIONS and DIAGRAMS

ACKNOWLEDGMENTS

I record my thanks to the University of British Columbia for the award of an Assistantship which gave me the unique opportunity to instruct and be instructed at the same time. I am very much indebted to Dr. G. M. Volkoff and Dr. Myer Bloom for the patience and sympathy with which they encouraged me on in this field. My thanks are also due to Dr. D. Ll. Williams and other friends in the laboratory for their help in discussions on miscellaneous topics in physics. These discussions clarified many points to me.

Dr. R. F. Grant helped in the construction of the r.f. oscillator and amplifier for which I am very much obliged. Mr. V. S. Lamba drew the diagrams. Mr. C. T. R. White helped me in the construction of the induction head.

I record my appreciation for the cooperation given me by all these gentlemen and the physics department workshop.

Finally, I wish to thank the Shromani Gurdawara Parbandhak Committee for giving me a loan for my passage expenses.

CHAPTER I

INTRODUCTION

Pennington and Petch[8] studied n.m.r. signals from B^{11} nuclei in a single crystal of inderite at room temperature and in a high magnetic field of 7187 gauss. Inderite as described by Frondel and Morgan[6] is a triclinic crystal having one formula unit of $Mg_2B_6O_{11}.15\ H_2O$ per unit cell. The signals observed by Pennington and Petch[8] showed quadrupole splitting. They studied the variation of quadrupolar-splitting as a function of orientation, for rotations of the crystal about three mutually perpendicular axes. Each axis was held normal to the magnetic field in turn. The results were interpreted using Volkoff's analysis[12], assuming that six B^{11} sites per unit cell belong to three distinct types--with two sites of each type related by a centre of symmetry. As a result, Pennington and Petch[8] reported the following values for quadrupole coupling constants C_z and asymmetry parameters η for three unique sites of B^{11}.

Site	K	L	M
$C_z = \frac{eQ\phi_{zz}}{h}$	355±5 Kc/Sec	517±7Kc/Sec	2546±10Kc/Sec
$\eta = \frac{(\phi_{xx} - \phi_{yy})}{\phi_{zz}}$	0.51±0.03	0.76±0.01	0.066±0.003

In these expressions eQ is the electric quadrupole moment of the nucleus and ϕ_{xx} etc. are second derivatives of the electrostatic potential at the nucleus produced by the surrounding charges. The directions x, y and z are chosen along the principal axes of the tensor ϕ_{xy} such that

$$|\phi_{xx}| \leq |\phi_{yy}| \leq |\phi_{zz}|$$

These constants have been used by the author to predict "pure" quadrupole frequencies of B^{11} in inderite. The "pure" quadrupole line corresponding to the M site has been experimentally observed. The observed frequency of the line is within 1% of the value predicted from the work of Pennington and Petch[8].

The apparatus used in this work is a crossed-coil nuclear induction spectrometer similar to those described by Proctor[9] and Weaver[13]. The existing spectrometer had to be considerably improved for this research. The improvements and modifications are discussed in Chapter III.

CHAPTER II

THEORY

The interaction between the nuclear electric quadrupole moment and an inhomogeneous electrostatic field has been discussed by a number of authors. Cohen and Reif[3] give the interaction Hamiltonian as

$$H_Q = \frac{eQ\phi_{zz}}{4I(2I-1)} \left\{ 3I_z^2 - I^2 + \eta\left(I_x^2 - I_y^2\right) \right\} \qquad \text{(i)}$$

where eQ is electric quadrupole moment of the nucleus, I_x, I_y, I_z are components of the nuclear spin operator I, $I^2 = I(I+1)$, ϕ_{xx}, ϕ_{yy}, ϕ_{zz} are second space derivatives of the electrostatic potential at the nucleus due to the surrounding charges. The directions x, y, z are chosen such that

$$|\phi_{xx}| \leq |\phi_{yy}| \leq |\phi_{zz}| ,$$

η is the asymmetry parameter $= \dfrac{(\phi_{xx} - \phi_{yy})}{\phi_{zz}}$.

For spin $I = 3/2$ the matix of H_Q in the representation of the spin wave functions $|\pm 3/2\rangle$, $|\pm 1/2\rangle$ is

$$H_Q = \begin{array}{c|cccc} & |+3/2\rangle & |-\tfrac{1}{2}\rangle & |+\tfrac{1}{2}\rangle & |-3/2\rangle \\ \hline \langle +3/2| & \frac{eQ\phi_{zz}}{4} & \sqrt{3}\,\eta\,\frac{eQ\phi_{zz}}{12} & 0 & 0 \\ \langle -\tfrac{1}{2}| & \sqrt{3}\,\eta\,\frac{eQ\phi_{zz}}{12} & -\frac{eQ\phi_{zz}}{4} & 0 & 0 \\ \langle +\tfrac{1}{2}| & 0 & 0 & -\frac{eQ\phi_{zz}}{4} & \sqrt{3}\,\eta\,\frac{eQ\phi_{zz}}{12} \\ \langle -3/2| & 0 & 0 & \sqrt{3}\,\eta\,\frac{eQ\phi_{zz}}{12} & \frac{eQ\phi_{zz}}{4} \end{array}$$

. . . . . (ii)

which upon diagonalisation, yields the following eigen values and eigen functions, to second order in η .

	Eigen Value	Corresponding Eigen Functions
(1)	$\frac{-eQ\phi_{zz}}{4}\,(1+\eta^2/3)^{\frac{1}{2}}$	$\left\{ \begin{array}{l} \left(1-\frac{\eta^2}{24}\right)\left\|+\tfrac{1}{2}\right\rangle + \frac{\eta}{2\sqrt{3}}\left\|-3/2\right\rangle, \\ \left(1-\frac{\eta^2}{24}\right)\left\|-\tfrac{1}{2}\right\rangle + \frac{\eta}{2\sqrt{3}}\left\|+3/2\right\rangle \end{array} \right.$
(2)	$+\frac{eQ\phi_{zz}}{4}\,(1+\eta^2/3)^{\frac{1}{2}}$	$\left\{ \begin{array}{l} (1-\eta^2/24)\left\|+3/2\right\rangle + \frac{\eta}{2\sqrt{3}}\left\|-\tfrac{1}{2}\right\rangle, \\ (1-\eta^2/24)\left\|+3/2\right\rangle + \frac{\eta}{2\sqrt{3}}\left\|+\tfrac{1}{2}\right\rangle \end{array} \right.$

. . . . . (iii)

The difference in energy between the two degenerate levels is

$$\Delta E = \frac{eQ\phi_{zz}}{2} \left(1 + \eta^2/3\right)^{\frac{1}{2}}$$

The results of Pennington and Petch for the M site of B^{11} in inderite,

$$\frac{eQ\phi_{zz}}{h} = 2546 \pm 10 \text{ Kc/Sec}$$

and $$\eta = 0.066 \pm 0.003$$

correspond to a transition frequency,

$$= \frac{\Delta E}{h} = 1273 \pm 5 \text{ Kc/Sec.}$$

CHAPTER III

APPARATUS

1. A brief description.

The apparatus used is a crossed coil nuclear induction spectrometer as described by Proctor[9] and Weaver[13]. An r.f. magnetic field at the resonance frequency of the nuclei excites a nuclear signal which is itself simultaneously modulated by an audio-frequency magnetic field of adjustable phase. The modulated signal is a mixture of the absorption and dispersion modes, and in order to single out one mode the signal in the pick-up coil is mixed with radio-frequency leakage of the driving frequency. The amplitude of the leakage is much larger than the nuclear signal and its phase relation with the nuclear signal can be adjusted to correspond to either the dispersion or the absorption mode. (See Andrew[2] pp.58-60).

The modulated r.f. signal at this stage is very weak - only ~ 0.1 milli Volts. The modulation factor is usually $\sim \frac{1}{100}$. If the signal is detected at this stage, the diode detector would contribute appreciably to the noise out put. To avoid this, the modulated r.f. signal is amplified about a hundred times by a tuned-input r.f. amplifier before detection. Even then the audio signal coming out of the detector is so weak that it has to be amplified 10^4 times before it can operate a recording device.

In order to observe very weak signals, it is usually necessary to

eliminate noise by reducing the bandwidth of the audio system. This is normally done in two stages. First the audio amplifier is tuned to the modulation frequency and then a phase sensitive detector[11] with an adjustable time constant is used. The output of the phase sensitive detector is matched to the recorder by means of a cathode follower.

The functions of the various units of the apparatus are more fully discussed by Abragam[1] pp.76-84.

2. Some design requirements.

For proper operation of the spectrometer the Values of various parameters such as:-

i) the magnitude of the driving r.f. field, H_{10};

ii) the magnitude of the modulating Zeeman field;

iii) the frequency ω mod of the modulating Zeeman field,

iv) the sweep speed $\frac{d\omega}{dt}$ of the driving r.f. frequency and

v) the time constant τ of the phase sensitive detector

should be adjusted to their optimum values.

Driving r.f. field.

The signal to noise ratio for the absorption signal is low both for very low as well as very high values of H_{10}. For very low values of H_{10} the absorption signal is smaller than the noise produced in the r.f. and audio amplifiers therefore signal to noise ratio is low. For very high values of H_{10}

the signal does not increase in direct proportion with H_{10} because the spin system gets saturated. Moreover, the r.f. oscillator which produces the r.f. magnetic field has to work at higher power levels. This gives rise to noise in the oscillator itself and off sets the advantage gained by an increase in the signal. Thus the signal to noise ratio is low again.

It has been found that signal to noise ratio is optimum in the samples studied when the r.f. oscillator works at about 20 volts giving $H_{10} \sim$ 0.1 gauss.

Modulation Zeeman Field.

The modulation field splits the pure quadrupole line and the splitting varies sinusoidally with the sinusoidal a.c. modulation field. Provided the magnitude of the splitting is small the operating point for a given r.f. frequency moves only on a small region of the profile of the line. Thus the signal which we get using a narrow band audio amplifier represents the derivative of the line rather than the line itself. For a faithful reproduction of the derivative it is necessary that the magnitude of splitting should be a small fraction of the line width.

For B^{11} in Kernite the Zeeman splitting of "pure" quadrupole line has been observed by Haering and Volkoff[7]. They find that a magnetic field of 5 gauss shifts the centre of a Zeeman components of the split line by 5 Kc/Sec from the centre of the unsplit "pure" quadrupole line. The ob-

served width of "pure" quadrupole line of B^{11} in Kernite is 15 Kc/Sec. So the modulation field for preliminary experiment on Kernite was set at 5 gauss. For more accurate line shapes the modulation field has to be decreased but then the signal becomes weak, so a compromise has to be made. The same value of 5 gauss was found satisfactory for the study of B^{11} in Inderite.

It may be mentioned here that the situation is slightly more complicated here than in the case of n.m.r. studies. The splitting of a line produced by a given modulation field varies when the orientation of the axis of maximum field gradient of the crystal is changed with respect to the modulation field. It is therefore impossible to specify an optimum modulation amplitude valid for all orientations.

Frequency of the modulating field.

For weak signals the modulation frequencies below 200 c.p.s. are not suitable since shot-noise has large Fourier components in this region. Moreover, to avoid hum pick-up, the chosen frequency should be away from the mains' harmonics. For these reasons the modulation frequency was chosen to be 228 c.p.s.

Sweep speed of driving frequency.

To avoid transients, the passage of driving frequency through reso-

nance should be "slow-adiabatic". This requires

$$\frac{d\nu}{dt} << (\delta\nu)^2$$

where $\delta\nu$ is line width in units of frequency.

Also the total time taken by the driving frequency to cross the line should be at least several times the time constant of the phase sensitive detector. Otherwise, the recorder will lag behind the changes of signal. Both these requirements are met by sweep speeds $\sim$ 4Kc/Sec/min.

Time Constant of the Phase Sensitive Detector.

The factors governing the choice of time constant are:

(1) Instability of the spectrometer

Due to the presence of thermal effects the trace on the recorder creeps slowly towards one side. For large time constants, the sweep-time has to be correspondingly larger. So, care has to be taken that the recorder does not shift too much during the sweep-time otherwise the signal will be obscured. This puts an upper limit on the sweep time and hence on the time constant.

(2) Signal to noise ratio

A good signal to noise ratio requires the time constant to be as large as possible.

A compromise between the above two requirements has to be sought. Experimentally it was found that a 5 sec time constant was quite

suitable for the samples studied.

3. Actual Design.

The r.f. oscillator and amplifier are similar to those used by Haering and Volkoff[7] except that the inductances of transmitter coils are now 39μH each and an isolating cathode-follower stage has been added at the end of the final r.f. amplifing stage. The output of the cathode follower stage goes to the frequency meter. The rest of the equipment resembles closely the one used by Robinson[10]. Important changes in design are listed below.

a) Crossed Coil Induction Head.

To ensure high Q for the receiver, the crossed coil box as described by Weaver[13] was wholly made of lucite without using any metal. This was enclosed in a larger metallic shielding box in such a way that transmitter and receiver coils were away from the metallic walls by more than 2 inches.

It was also found that the coaxial cables introduced inductances and capacities of about 4% of the respective values used in tank circuits. Now, to ensure perfect tracking between oscillator and receiver and for a distortion-free output from the oscillator, the two tank circuits of the push-pull oscillator should be identical to each other and to the tuned input circuit of the r.f. amplifier. If the receiver coil has a Q of 20 then 4% difference in the natural frequencies of transmitter

and receiver circuits will not only destroy tracking but also reduce the amplification of the nuclear signal. It was therefore necessary to employ three well matched single coaxial cables, two to connect the transmitter coils to the oscillator and one to connect the receiver coil to the r.f. amplifier. Whatever changes are produced in component values by the cables are thus equal for all the three tank circuits. The symmetry of tank circuits is not destroyed and hence tracking is excellent. Previously, the connections from the transmitter coils were taken out by a twin coaxial cable and those from the receiver coil were taken out by a single coaxial cable without any regard to the symmetry of tank circuits.

Another modification is in the mounting of the modulation coils, Formerly they were mounted on metal walls and they induced in the walls strong eddy currents whose magnetic fields coupled with the receiver coil. Thus direct coupling between the modulation field and the transmitter coil could not be effectively removed in spite of the orthogonal configuration of modulation and receiver coils. Moreover, the modulation currents made the walls vibrate giving rise to large audio signals after the second detector--much larger than those obtained from the nuclear signal. These back ground audio signals either saturated the audio amplifier or, at least, produced large drifts in the recorder. To counter this, the phase sensitive detector

had to function asymmetrically; an undesireable characteristic when studying line shapes. This trouble has been remedied by mounting the modulation coils on the inner lucite box, thus keeping them away from the metal walls.

b) Audio amplifier.

The audio amplifier in Robinson's[10] circuit consisted of three sub-units. Each sub unit had three pentode amplification stages with negative feedback stabilization. An attenuator switch between the first and second sub-unit served as a gain control. It has been found that the noise level is minimum when all the required gain is obtained from the first two sub-units, using a minimum of attentuation. Using all the three sub-units required a comparatively larger attenuation and even then the signal to noise was less than that obtained by using only two sub-units. So, the third sub unit has been discarded.

c) Phase-sensitive detector.

The triode input tube of Robinson's[10] design has been replaced by a pentode. The input tube now has a resistance about a hundred times the resistance of the switching tube and the two tubes are in series. Small changes in plate voltage will now produce only second order changes in the plate current of the switching tube which ensures the original high balance stability of Schuster's[11] design. The secondary

winding of the audio-transformer which feeds the reference signal has been grounded at both ends through 55 μμf condensers. This filters off high frequency noise components. The switching tube has been changed from 6SN7 to 6SL7. This gives some additional gain to the audio-signal. Wherever symmetrical operation was required well matched thermostable components have been used. The twin triodes also have well matched halves.

d). Phase Shifter.

The phase shifter circuit, which is supposed to bring the reference signal and the nuclear audio signal into phase by changing the phase of modulation voltage, has been redesigned. The amplitude and phase controls of modulation voltage are now independent of each other and it is possible to change the phase by more than 360°.

Apart from these design changes, two other sources of trouble have been pin-pointed and removed. One was the common power supply for all the circuits and the other was 'microphonics'. The r.f. oscillator and amplifier now have a separate power supply. The microphonics in the induction head disturbed the orthogonality of receiver and transmitter coils making the absorption mode more susceptible to microphonics than the dispersion mode. The microphonics were removed by mechanically decoupling the frequency drive from the rest of the circuit. Also the induction head was seated on a well padded heavy base. With the removal of microphonics, the derivative of absorption mode comes quite clearly on the recorder. This makes the

measurement of resonance frequency much more accurate than it would be possible from the derivative of dispersion mode. This is because at resonance frequency, the trace of the derivative of absorption mode is expected to intersect the base-line.

The frequency is measured by Hewlett Packard Electronic Counter model 524C. This counter has an accuracy of one in a million. However, the accuracy of actual measurement will be much less than this because the back ground noise introduces some uncertainty in the position of the base line. Consequently, the value of resonance frequency which is determined by the intersection of the trace of absorption derivative with the base line will have the corresponding uncertainty.

4. Operation of the spectrometer.

The various units are connected as shown in the block diagram of figure III, 13, of Abragam[1].

(i) Before starting observations the circuits should be left on for at least three hours so that they attain a steady temperature.

(ii) The tracking between r.f. oscillator and tuned r.f. amplifier should be checked and necessary adjustments made by manipulating the trimmer condensers in parallel with the main tuning condensers.

(iii) The frequency of modulation should be adjusted to the tuning frequency of the narrow band audio-amplifier.

(iv) The mechanical zero of Esterline Argus recorder should be checked.

(v) The recorder should be connected to the phase sensitive detector, the grids of the symmetrical cathode follower stage of the phase sensitive detector shorted and its "meter zero" control adjusted such that the recorder shows no deflection. The above mentioned grids should now be disconnected from each other.

(vi) If after disconnecting grids the recorder again shows a deflection, it should be brought back to zero with the help of the "balance-potentiometer" provided in the plate circuit of the switching twin triode of the phase sensitive detector.

(vii) With r.f. oscillator running, the transmitter coils of induction head decoupled to the maximum from the pick-up coil and the detected out-put of r.f. amplifier feeding the audio amplifier, the gain of the audio-amplifier should be adjusted ($\sim 10^4$) such that the back ground noise in the recorder is about three or four small divisions using the lowest time constant from the phase sensitive detector.

(viii) If setting (vii) disturbs the recorder zero, the steps (v) and (vi) should be repeated.

(ix) For tuning the apparatus to a known specimen which is kernite in our case, the pick-up and transmitter coils should now be decoupled to the maximum by using the "differential screw" and the "inductive-loop" controls. The desired autodyning leakage should then be re-

introduced in the pick up coil. For this purpose the screw controls the absorption mode and the inductive loop controls the dispersion mode.

(x) The kernite crystal should be placed in the pick-up coil with its b-axis along the axis of pick-up coil and c-axis along the modulation field.

(xi) With the recorder running and modulation field set to 5 gauss, the frequency of the r.f. oscillator should be swept over ten times the line width i.e. about 100 Kc/Sec near 1290 Kc/Sec in our case.

(xii) If the signal is barely visible, [illegible] more runs should be given with different settings of the modulation phase until the biggest signal amplitude in obtained. This will happen when the input to phase sensitive detector is in phase with the reference voltage.

(xiii) The signal to noise ratio could now be improved by switching to higher time constant of the phase sensitive detector and using slower sweep speeds of r.f. frequency.

(xiv) If the line shape appears distorted, the modulation field could be decreased.

(xv) For measurements of resonance frequency, the artificial leakage introduced in pick-up coil should be selected for the absorption mode. The value of frequency should be read from Hewlett Packard Electronic counter when the trace of the derivative of absorption signal crosses the base-line on the chart of the recorder.

CHAPTER IV

RESULTS

The figure on the next page shows a trace of the derivative of the absorption signal for the M site of B^{11} in inderite. The resonance was observed under the following conditions:

Time constant of the phase-sensitive detector = 5 sec.

Audio gain $\sim 10^4$

Zeeman modulation field = 5 gauss

R.F. magnetic field = 0.08 gauss

R.F. gain $\sim 10^2$

Sweep speed = 5Kc/sec per minute

On the recording paper one large division represent 6Kc/sec. The background noise which is about 4 small divisions, introduces an uncertainty of 1Kc/sec in the determination of the resonance frequency.

The resonance frequency was measured on twelve separate runs and was accurately reproducible. The value obtained is

$$= 1285 \pm 1 \text{ Kc/sec}$$

where the error is an upper limit due to possible uncertainty in the position of the baseline.

The theoretical value of the resonance frequency predicted from the measurements of Pennington and Petch[8] is

$$= 1273 \pm 5 \text{Kc/sec}$$

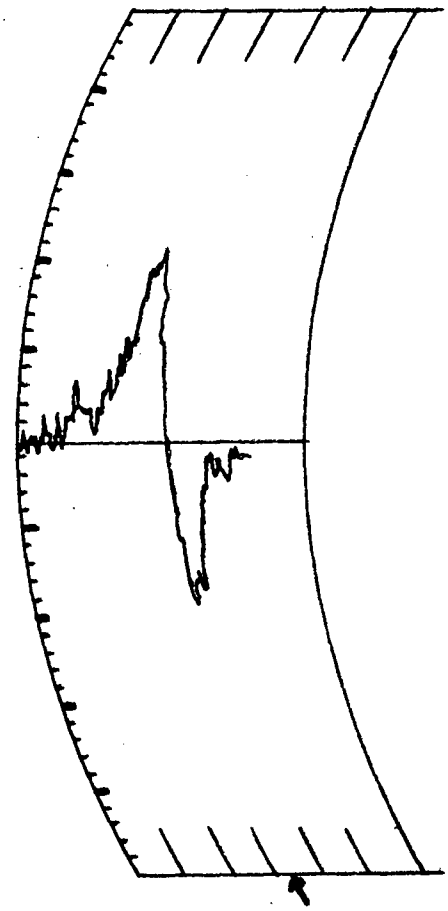

1285 ± 1 Kc/sec

Fig. 1. Derivative of the absorption mode of "pure" quadrupole line for the M site of B^{11} in inderite.
Modulation field = 5 gauss
R.F. magnetic field = 0.08 gauss
R.F. gain = 10^2
Audio gain $\approx 10^4$
Sweep speed = 5Kc/sec/min
Time constant of the phase sensitive detector = 5 sec.

and it is seen that the present result lies outside the limits of error quoted.

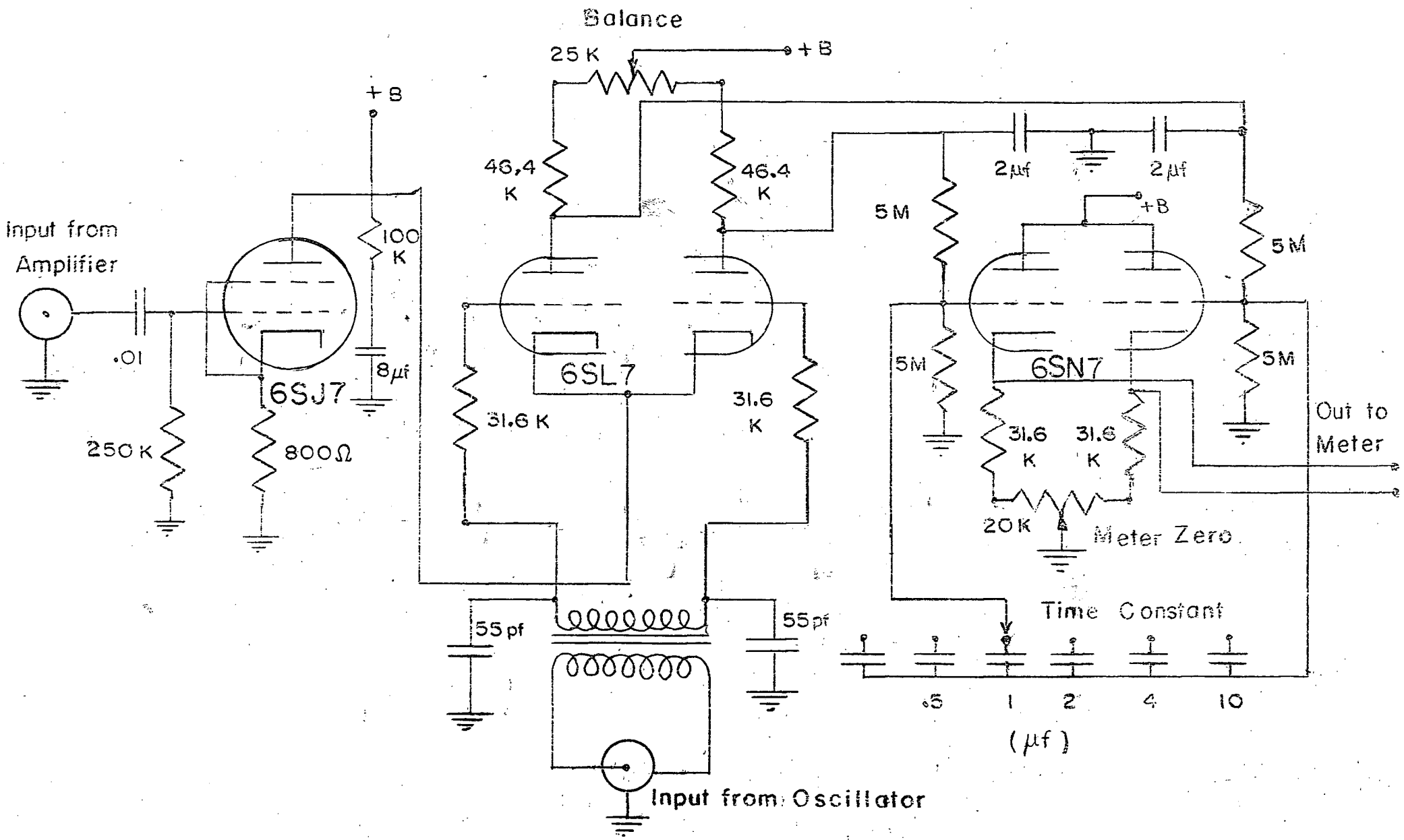

PHASE SENSITIVE DETECTOR

TO FACE PAGE 21

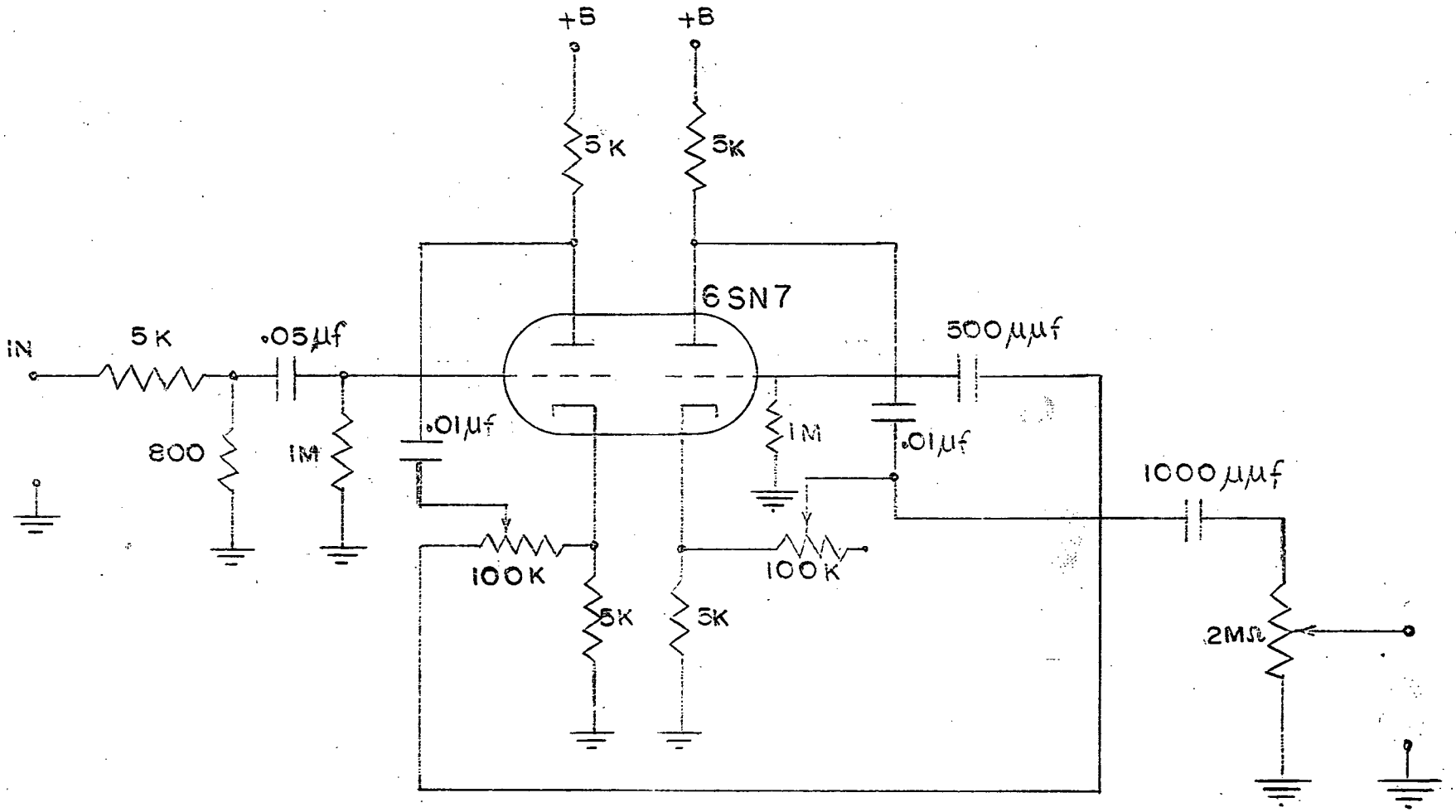

PHASE AND AMPLITUDE CONTROL
OF THE MODULATING VOLTAGE

TO FACE PAGE 21

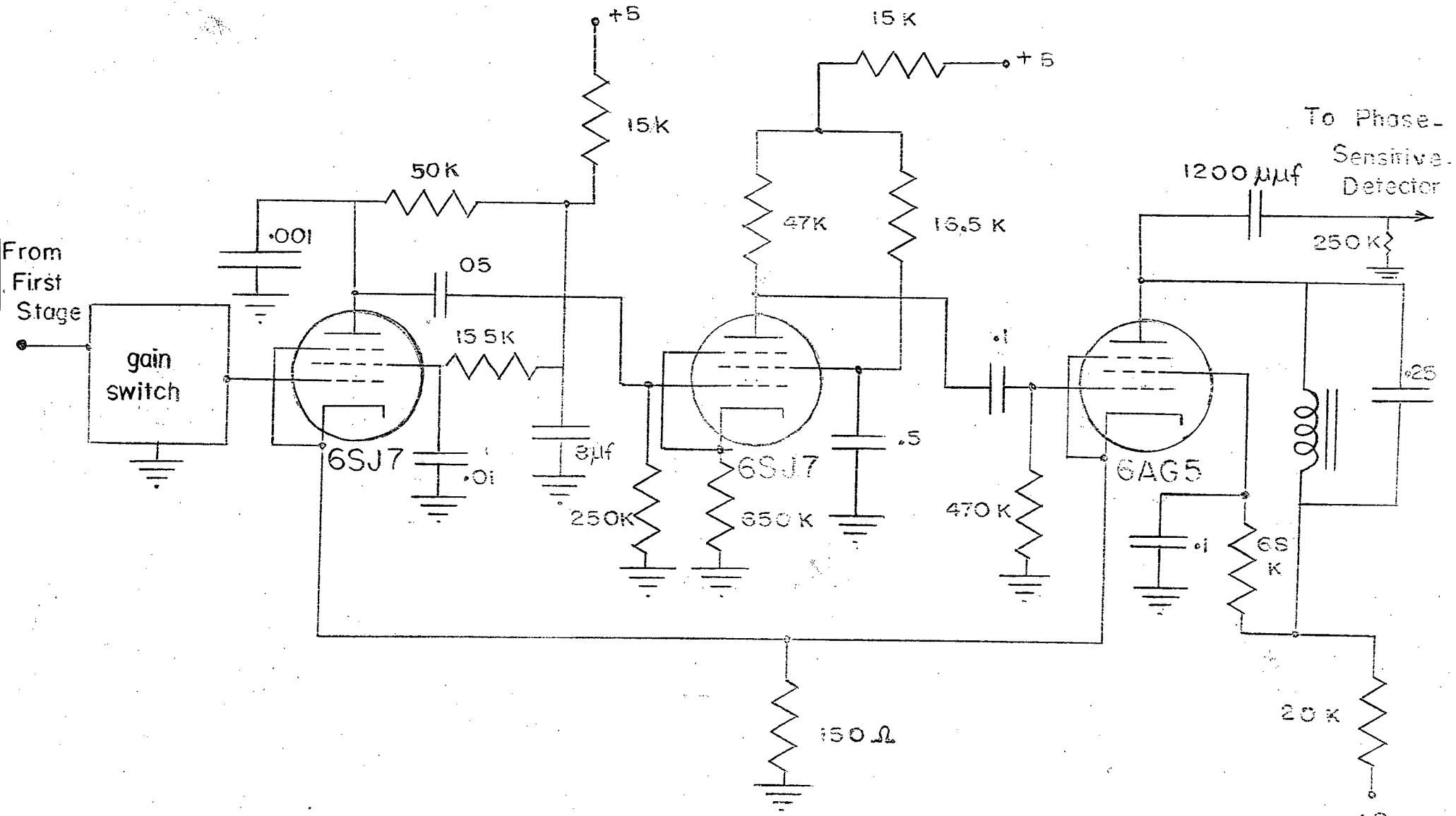

SECOND STAGE AUDIO AMPLIFIER

TO FACE PAGE 21

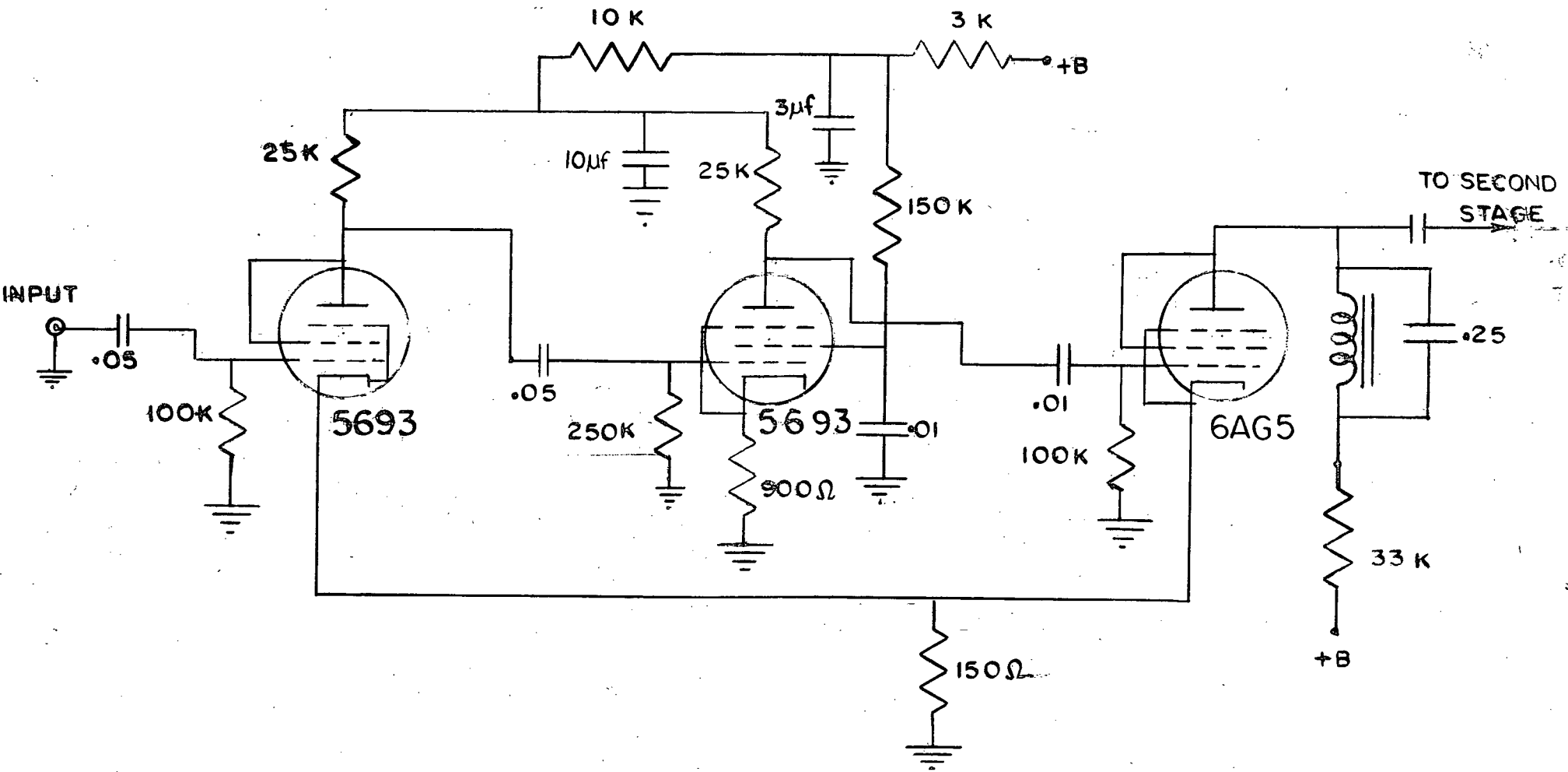

FIRST STAGE AUDIO AMPLIFIER

TO FACE PAGE 21

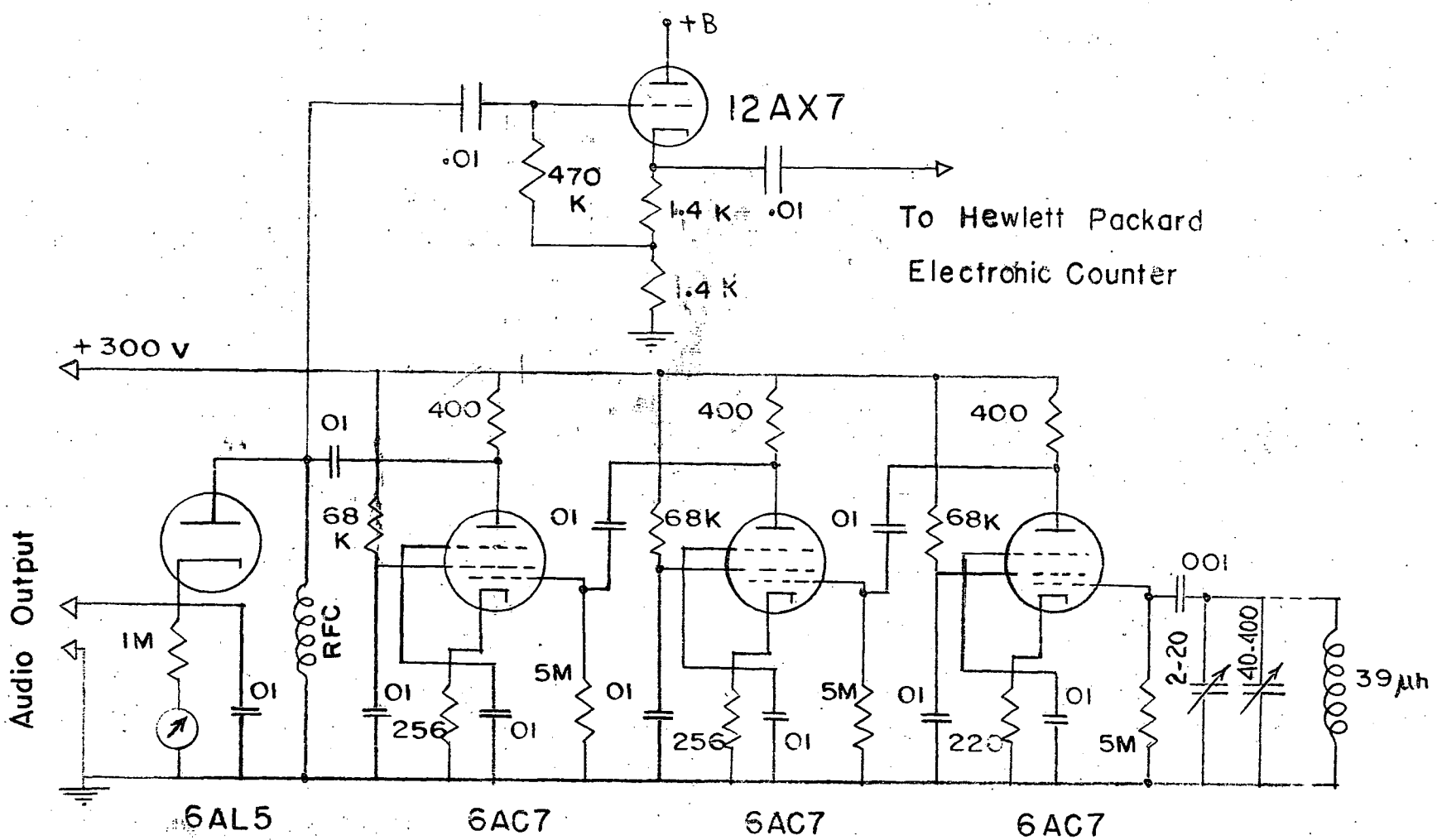

THE RECEIVER

TO FACE PAGE 21

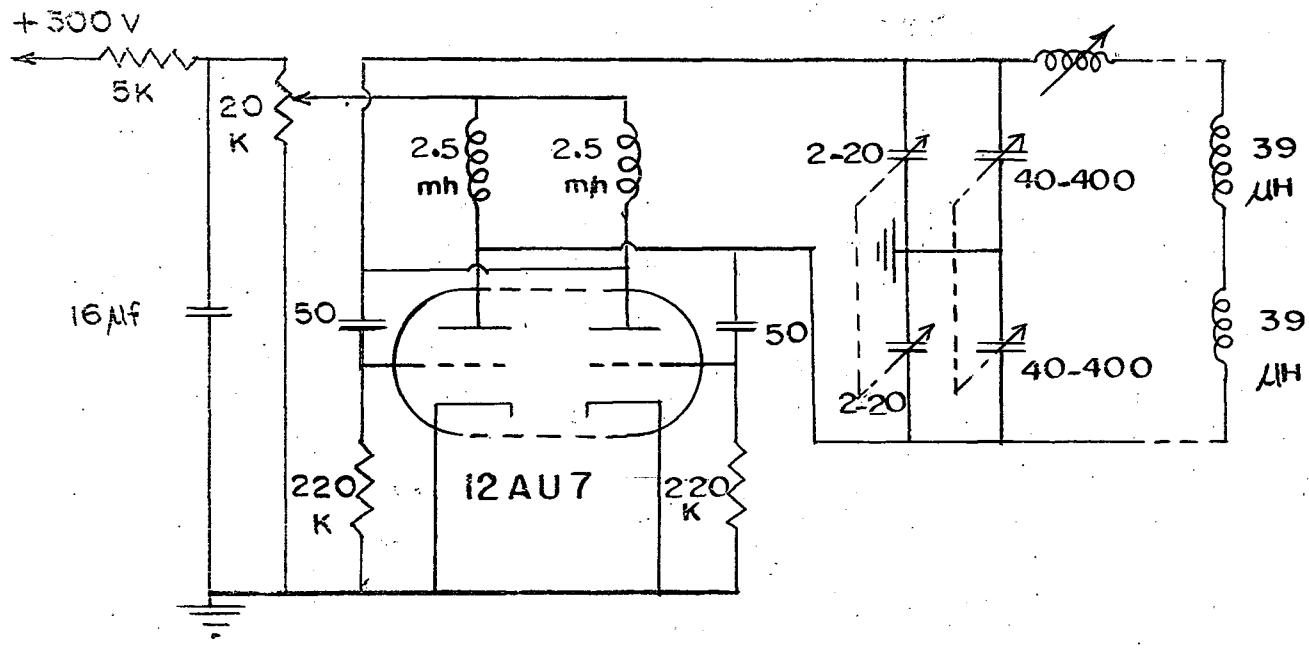

THE TRANSMITTER

TO FACE PAGE 21

REFERENCES

1. Abragam, A., The Principles of Nuclear Magnetism, pp.76-84, Oxford at the Clarendon Press, (1961).
2. Andrew, E. R., Nuclear Magnetic Resonance, pp.58-60, Cambridge University Press, (1956).
3. Cohen, M. H. and Reif, F., Solid State Physics, 5, 321, (1957).
4. Dean, C., Phys. Rev. 96, 1053 (1954).
5. Dehmelt, H. G., Can. J. Phys. 22, 110 (1954).
6. Frondel, C., and Morgan, V., Am. Mineral., 41, 839 (1956).
7. Haering, R.R. and Volkoff, G.M., Can. J. Phys., 34, 577 (1956).
8. Pennington, K. S., and Petch, H. E., J. Chem. Phys., 33, 329 (1960).
9. Proctor, W. G., Phys. Rev. 79, 35(1950).
10. Robinson, L. B., Ph.D. Thesis, Univ. of British Columbia, Vancouver, B. C.
11. Schuster, N. A., R. S. I. 22, 254, (1951).
12. Volkoff, G. M., Can. J. Phys. 31, 820 (1953).
13. Weaver, H. E., Phys. Rev. 89, 923 (1953).