LE3B7
1949 A8
P3G2
Cop. 1

THE GAMMA RAYS OF RADIUM (B + C)

by

Michael Pearce

Thesis Submitted in Partial Fulfillment of
the Requirements for the Degree of
Master of Arts
in the Department of Physics

Approved
Sept. 30/49.

The University of British Columbia

May, 1949.

ABSTRACT:

Several new techniques for improving the statistics of counting small peaks on large backgrounds in a beta-spectrometer are presented. These arose from an attempt to reconcile the conflicting reports in the literature of gamma-transitions in Ra (B + C) above 1.02 Mev. Some success has been met with.

ACKNOWLEDGMENT:

This work was carried out under a Grant-in-Aid of Research to Dr. K.C. Mann from the National Research Council. The author would like to acknowledge the National Research Council Scholarship which made the investigation possible. The British Columbia Industrial Research Council kindly placed a 500 mc. radium source at our disposal. Lastly, the author would like to acknowledge the continued assistance of Dr. K. C. Mann, without whose interest the project could not have been undertaken.

TABLE OF CONTENTS:

Acknowledgment	Page	1
Contents		2
Abstract		3
Introduction		4
Experimental Techniques		
(i) The Spectrometer		5
(ii) The Geiger Counter		5
(iii) The Source		9
(iv) The Current Regulator		9
(v) The Counting Equipment		10
Results		10
Conclusions		13
Bibliography		14

INTRODUCTION:

Alechanov and Latyshev[1] using internal pair production report eleven gamma-lines of RaB and RaC of energy more than 1.02 Mev. Ellis[2], and Mann and Ozeroff[3] each report six lines in this region. Ellis used internal conversion techniques. The latter group used a thin lens beta-spectrometer and 10 mc. of Ra (B + C) with a lead radiator (i.e. a thin lead lamina as a source of photoelectrons.). Because a 500 mc. source of Ra (B + C) has since been made available by the British Columbia Research Council, the spectrum has been repeated in an attempt to confirm the work of Alechanov and Latyshev. This has been done in a thin lens spectrometer of the type described by Deutsch, Elliott, and Evans[4]. The spectrometer is shown in Fig. 1 and is shown schematically in Fig. 7.

A reduction of background count to improve the counting statistics has been attempted in the following ways:

(i) Coincidence counters were constructed so as to count only those particles which entered the counter window in the proper direction as defined by the spectrometer baffles. (see Fig. 2)

(ii) Extra lead was added to baffle A (see Fig. 7) at the source end to reduce the background from Compton electrons.

(iii) Compton electrons produced in the source con-

tainer made a large contribution to the background count. An attempt was made to deflect these electrons away from the line of focused electrons by means of a magnet placed between the source container and radiator.

EXPERIMENTAL TECHNIQUES:

(i) The Spectrometer. (see Figs. 1 and 7)

The spectrometer used was of the thin lens type described by Deutsch, Elliot and Evans. The spectrometer tube was 40 inches in length and 8 inches in diameter. It was aligned parallel to the magnetic meridian in order that the horizontal component of the earth's field should not defocus the beta-particles. The vertical component of the earth's field was eliminated by passing a current through horizontal Helmholtz coils above and below the spectrometer. (see Fig. 1)

The magnet consists of four water cooled coils. (see Fig. 7) In this spectrum only the three outer coils were used. This has the advantage of lowering the spherical aberration and thus increasing the resolution.

(ii) The Geiger Counter.

In the operation of any counter where it is desired to measure a counting rate N which is superimposed upon a background counting rate N_{back}, it is apparent that two separate measurements be made - the total count and N_{back}. N is

then obtained by subtraction.

Thus

$$N = N_{total} + N_{back} \quad \ldots\ldots\ldots\ldots\ldots \quad (1)$$

It follows that the standard deviation of N is

$$\sigma^2 = \sigma^2_{total} + \sigma^2_{back} ,$$

and assuming a Poisson distribution

$$\sigma = \sqrt{N_{total} + N_{back}} \quad , \text{ and from (1)}$$

$$= \sqrt{2N_{back} + N} \quad \ldots\ldots\ldots\ldots\ldots\ldots\ldots \quad (2)$$

To reduce σ and thereby improve the statistical accuracy it was necessary to reduce N_{back}. This was accomplished by two counters operating in coincidence so as to record only focussed beta-rays. The arrangement is shown in Fig. 2. The two counter tubes are cut in brass stock at right angles to one another and to the axis of the spectrometer tube. The hole between counters and the mica window lay on the axis of the tube. Maximum transmission was obtained by focussing on the wire of counter No. 2.

Kovar-glass seals were used to plug the counter tubes. No. 40 copper wire was threaded for the anode. A 2.5 mg./cm^2 mica window was sealed with Plicene cement. A conventional filling of 9 cm. of argon and 1 cm. of alcohol was used. Each counter exhibited a 100 volt plateau with a rise of less than 0.2% per volt. However, the efficiency of the counters went down several percent in a few hours of operation at a counting rate of 10,000 per minute. This was thought to result

from the relatively small volume of alcohol available in the tubes. However, when a similar counter was operated with a counting gas reservoir, the same behaviour was observered. This suggests that the instability is a cathode effect, and some evidence to support this view was obtained by the writer at the Chalk River laboratories of the National Research Council.

A test was conducted to insure that the operation of one tube was independent of the operation of the other. The possibility existed that when one tube recorded an ionizing event, that a photon from the electron avalanche in this tube should pass through to the second tube, causing a spurious count. This was investigated by observing the counting rate of tube No. 1 with the voltage on and with the voltage off tube No. 2 (i.e. with and without No. 2 counting.). Typical figures for tube No. 1 were 1824 (s.d. = 6) counts per minute with tube No. 2 off and 1882 (s.d. = 8) counts per minute with tube No. 2 recording 3000 counts per minute. Assuming that the change in rate of 58 comes from tube No. 2, we may say that 2% of the avalanches spread from tube No. 2 to tube No. 1.

The use of the crossed counters in coincidence as compared to the use of tube No. 2 by itself was found to reduce the background count by a factor of nine. At the same time however, the net count was reduced by a factor of three.

The change in the statistical accuracy, which these two new counting rates bring about, is investigated below.

Consider σ/N as a figure of merit, where σ is the standard deviation of the net coincidence count N. Since

$$\sigma = \sqrt{N_{total} + N_{back}}$$

and $$N = N_{total} + N_{back} ,$$

therefore $$\sigma/N = \sqrt{N + 2N_{back}} \quad /N.$$

Let the net count for the single counter be N', and let the background for the single counter be N'_{back}. Then putting $N' = 3N$ and $N'_{back} = 9N_{back}$ we obtain for the single counter

$$\sigma'/N' = \sqrt{N' + 2N'_{back}} \quad /N'$$

$$= \sqrt{3N + 18N_{back}} \quad /3N \qquad \ldots\ldots\ldots\ldots\ldots (3)$$

where σ' is the standard deviation of N'.

Examination shows there is no N' such that

$$\sigma/N < \sigma'/N'.$$

That is, no better statistics are obtainable from the use of the two counters. However if it were that

$$N' = 2N,$$

then obviously

$$\sigma/N < \sigma'/N' \qquad \text{for all } N < 5N_{back}.$$

So the efficiency of the coincidence counters for focussed electrons must be slightly increased if the statistics are to be improved. This might be accomplished by more careful focussing and better collimation. If the counting

losses were due to scattering in the window, thinner mica might improve the efficiency.

(iii) The Source.

The 500 mc. radium source was in a silver container whose walls were of sufficient thickness to stop the primary beta-rays. An attempt to separate the Compton electrons of the container from the gamma-rays by means of a strong permanent magnet was made. The gap of the magnet, which had a flux of 1,500 gauss, was placed between the lead radiator and the source. It was necessary to shield the spectrometer tube from the permanent magnet by an iron sheet placed perpendicular to the axis of the spectrometer. This sheet had a 5/16 inch hole opposite the lead radiator, which was 3/16 inches in diameter. However, the magnet was unable to remove beta-particles scattered from the pole faces and from the iron sheet, with the result that the background was not successfully eliminated.

The background was very effectively reduced by enlarging the baffle at the counter end of the spectrometer tube and by better collimation at the source end.

(iv) The Current Regulator.

The magnet current was regulated in a conventional manner by passing it through 38 twin triodes (6AS7's) in parallel. (see Fig. 3) A signal is taken from a constant re-

sistance in the magnet circuit, amplified by an A. C. and a D. C. amplifier, (see Fig. 4) then applied 180° out of phase onto the grids of the 6AS7's. The input of the D.C. is a Brown converter which detects the difference between the signal and a potentiometer voltage. The potentiometer setting may be checked against a standard cell.

(v) Counting Equipment.

Counting was done with the coincidence counter described in section (ii) and a regulated high tension set. A conventional cathode follower was used in conjunction with an "Atomic" scaler and a preamplifier. (see Fig. 5)

RESULTS:

The curves obtained are shown in Fig. 6. The upper curve was taken with the lead radiator and is the sum of photoelectrons from the lead radiator, Compton electrons from the source holder, and electrons scattered in the spectrometer. The lower curve was taken without the lead radiator.

The 0.607 Mev gamma-line was used for calibration.

The results appear in Table I together with the results of Ellis, Mann and Ozeroff, and of Alechanov and Latyshev. It should be noted that the gamma line of energy 1.52 reported by Alichanov and Latyshev has been confirmed. The

value obtained was 1.54 Mev. A faint line detected at 1.94 Mev may be the 1.82 Mev line reported by Alechanov and Latyshev.

The gamma line reported at 0.448 Mev by Mann and Ozeroff has not been found.

Note that in the region below 1.02 Mev, lines reported at 0.498 Mev and 0.933 Mev by Ellis have been found at 0.511 Mev and 0.950 Mev respectively.

TABLE I

GAMMA LINES OF RADIUM IN MEV.

Ellis	Alechanov and Latyshev	Mann and Ozeroff	Mann and Pearce
0.0529			
0.2406			
0.2571			
0.2937		0.291	0.283
0.3499		0.352	0.351
0.4260		0.426 (9)	0.425
		0.450 (4)	0.483
0.4980		0.496 (14)	0.511
0.6067	0.606	0.607 (74)	0.607
0.766	0.766	0.781 (13)	0.780
0.933	0.933		0.950
	1.11		
1.120	1.120	1.12 (9)	1.12
	1.21 (23)	1.22 (24)	1.22
1.238	1.234		
1.379	1.370		
	1.39 (49)	1.40 (23)	1.38
1.414	1.414		
	1.52 (29)		1.54
	1.62 (22)		
	1.69 (17)		
	1.75 (100)	1.77 (100)	1.79
1.761	1.761		
	1.82 (17)		1.94
	2.09 (15)		
2.193	2.20 (41)	2.21 (25)	2.23
	2.40 (21)	2.40	

Figures in parentheses are relative intensities.

CONCLUSIONS:

The present investigation has indentified gamma rays which are in agreement with the overall picture of Ellis. One, and probably two, lines of Alechanov and Latyshev hitherto unconfirmed have been found.

BIBLIOGRAPHY:

1. Alechanov, A., and Latyshev, G. D., Compt. rend. acad. sci. U. S. S. R. 20:249. 1948.

2. Ellis, C. D., Proc. Roy. Soc. (London), A, 143:350. 1934.

3. Mann, K. C., and Ozeroff, M. J., Can. Jour. of Res., A, Vol. 27, p. 164. 1949.

4. Deutsch, M., Elliott, L. G., and Evans, R., Rev. Sci. Instruments, 15:7. 1944.

Fig. 1

The Thin Lens Beta Spectrometer

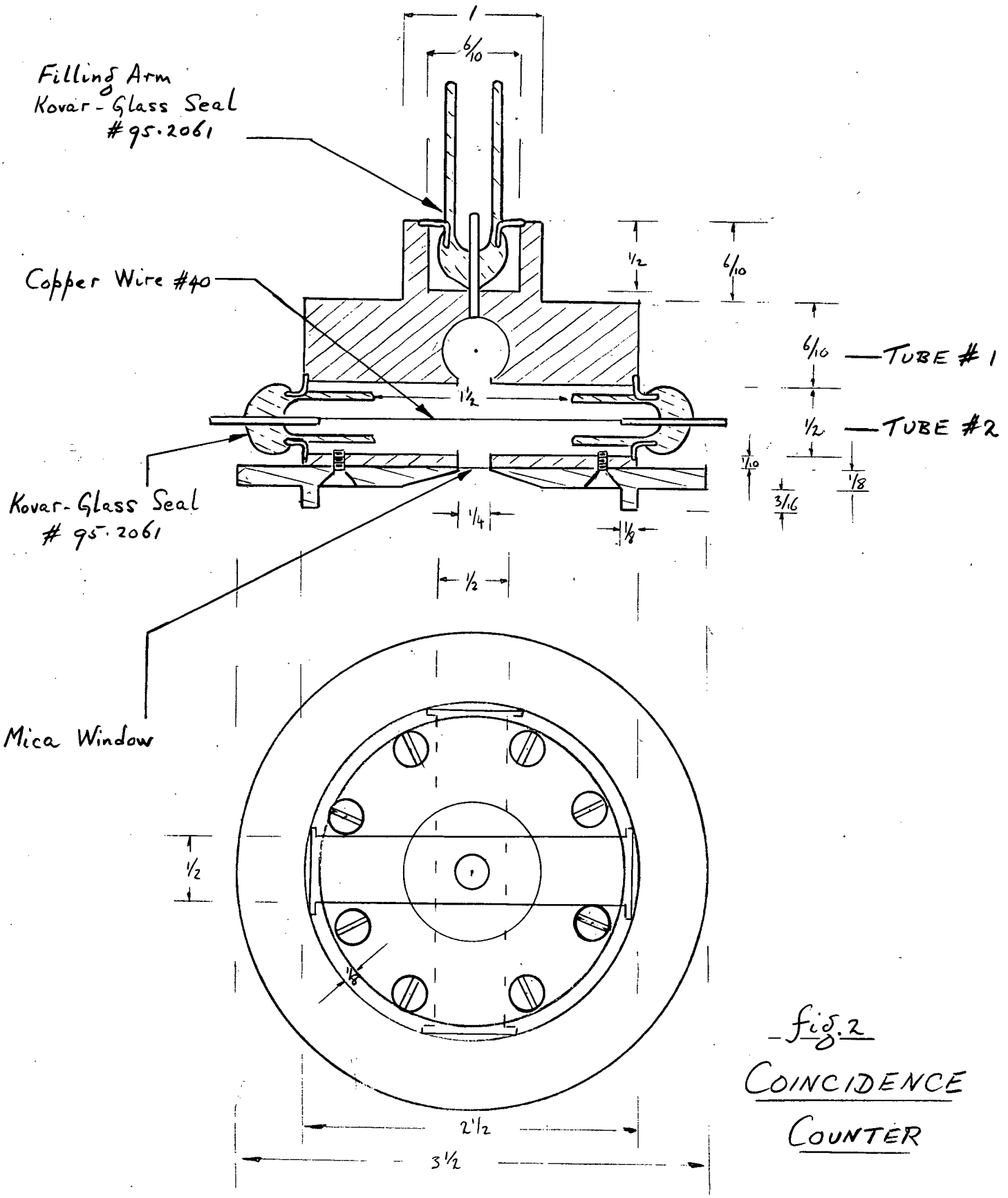

fig. 2
COINCIDENCE COUNTER

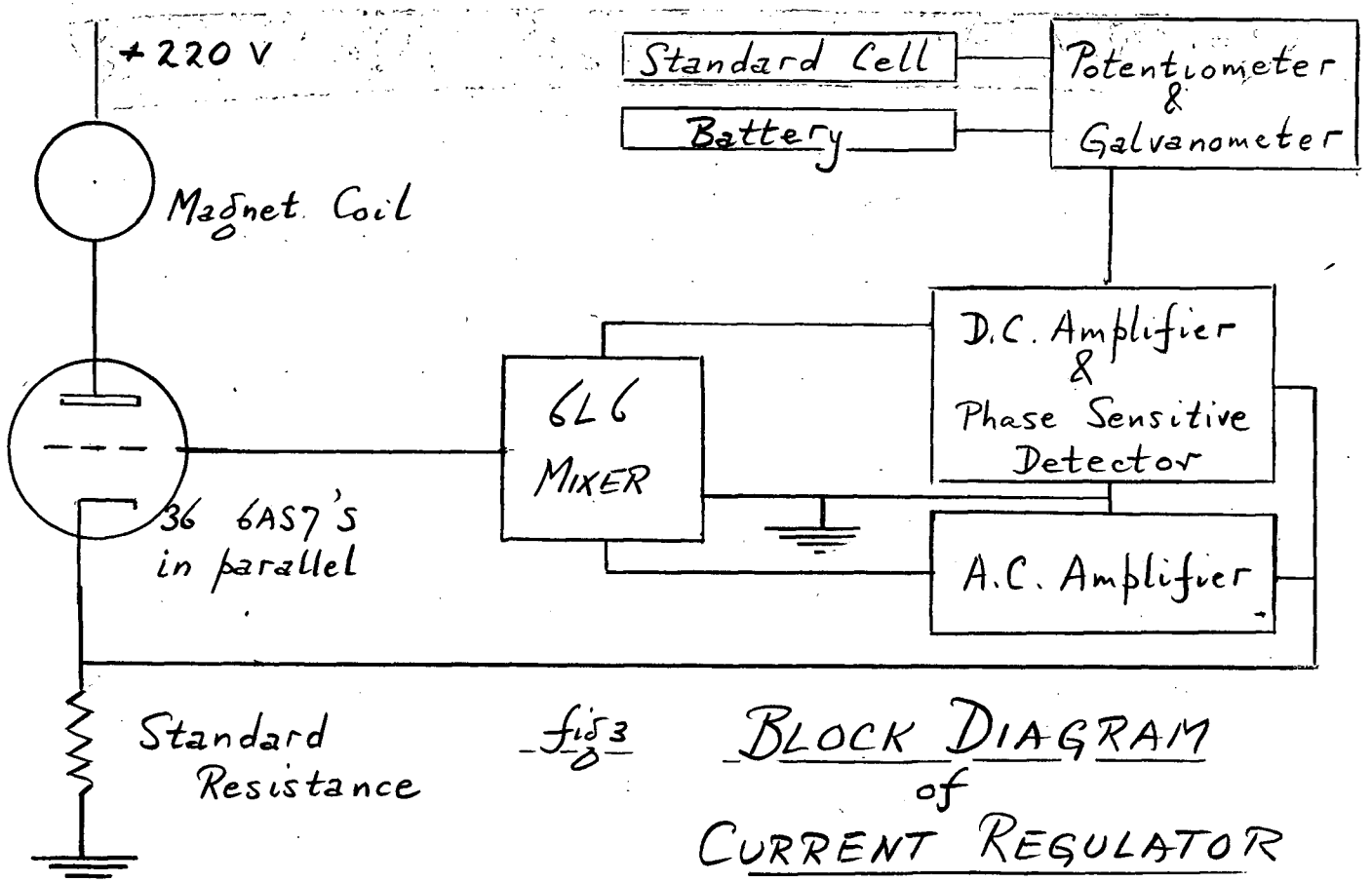

fig 3 BLOCK DIAGRAM of CURRENT REGULATOR

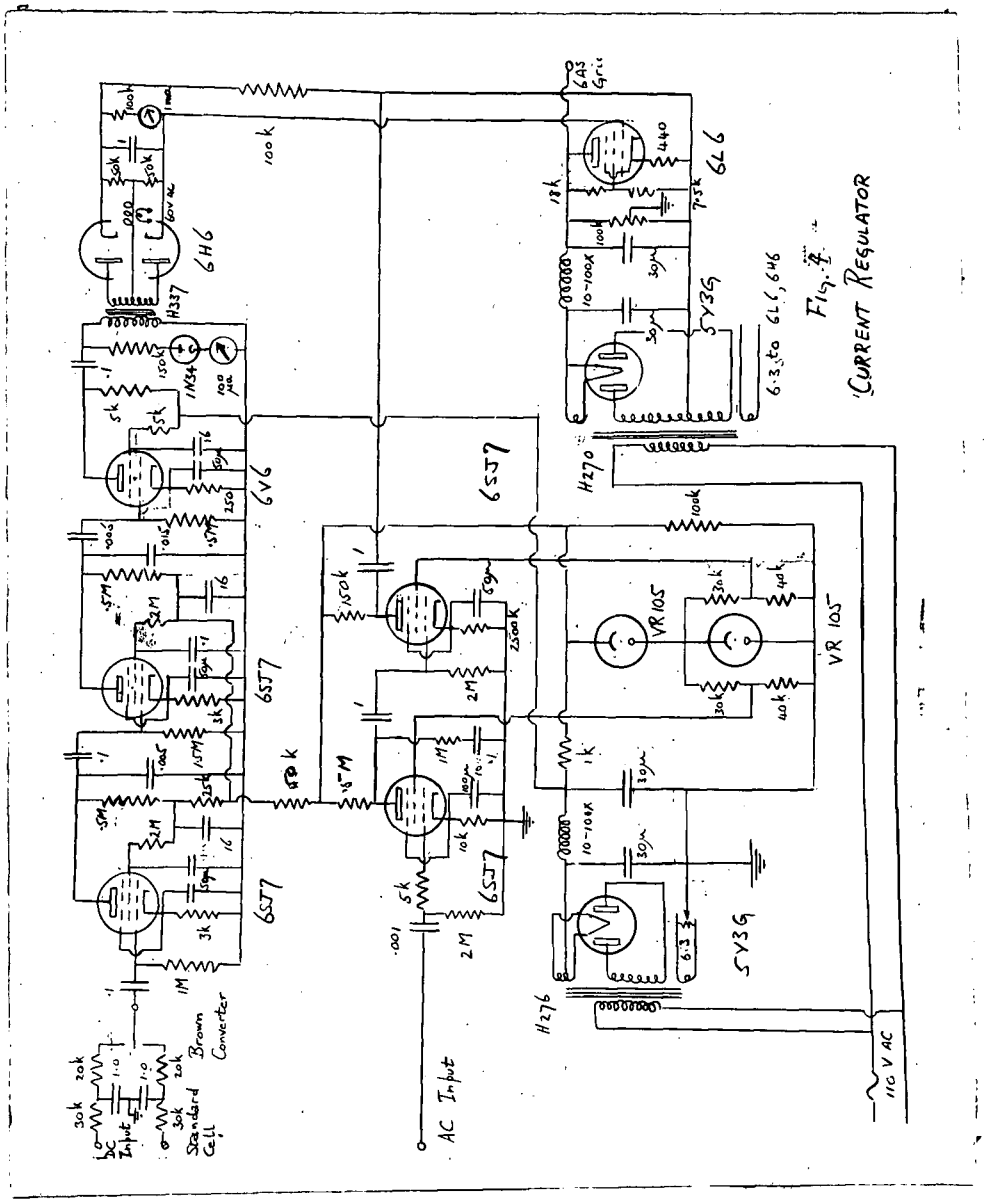
Fig. 4
CURRENT REGULATOR
6H6
6V6
6SJ7
6L6
5Y3G
VR 105
H337
H270
H276
1N34
Brown Converter
Standard Cell
AC Input
110 V AC
6.3 to 6L6, 6H6
6AS Grid

Fig. 4

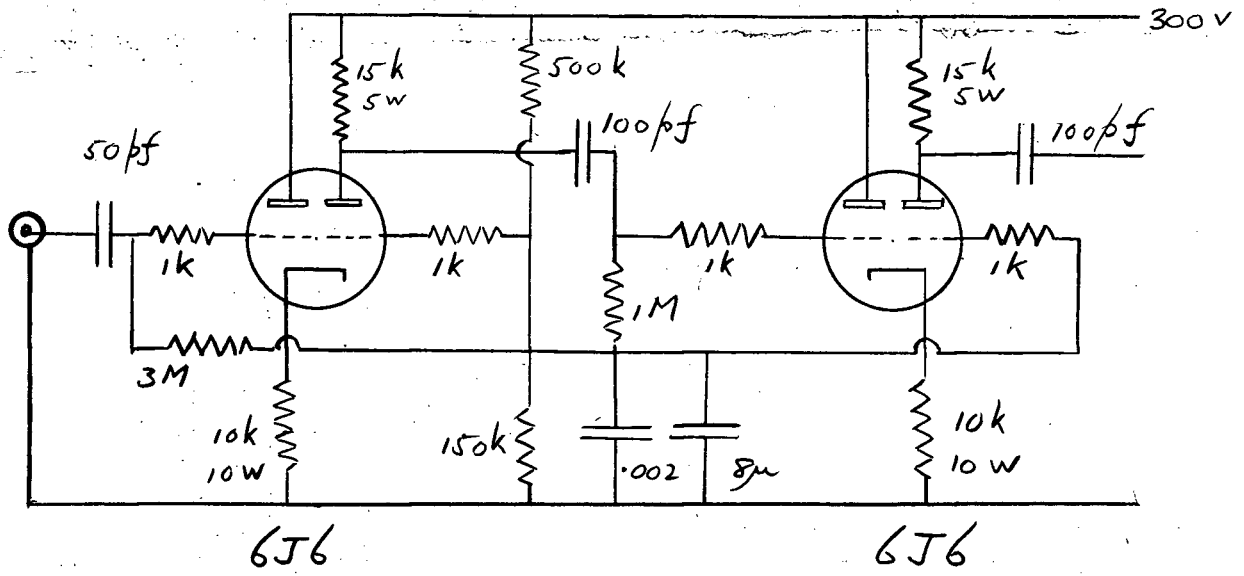

fig 5

LINEAR AMPLIFIER

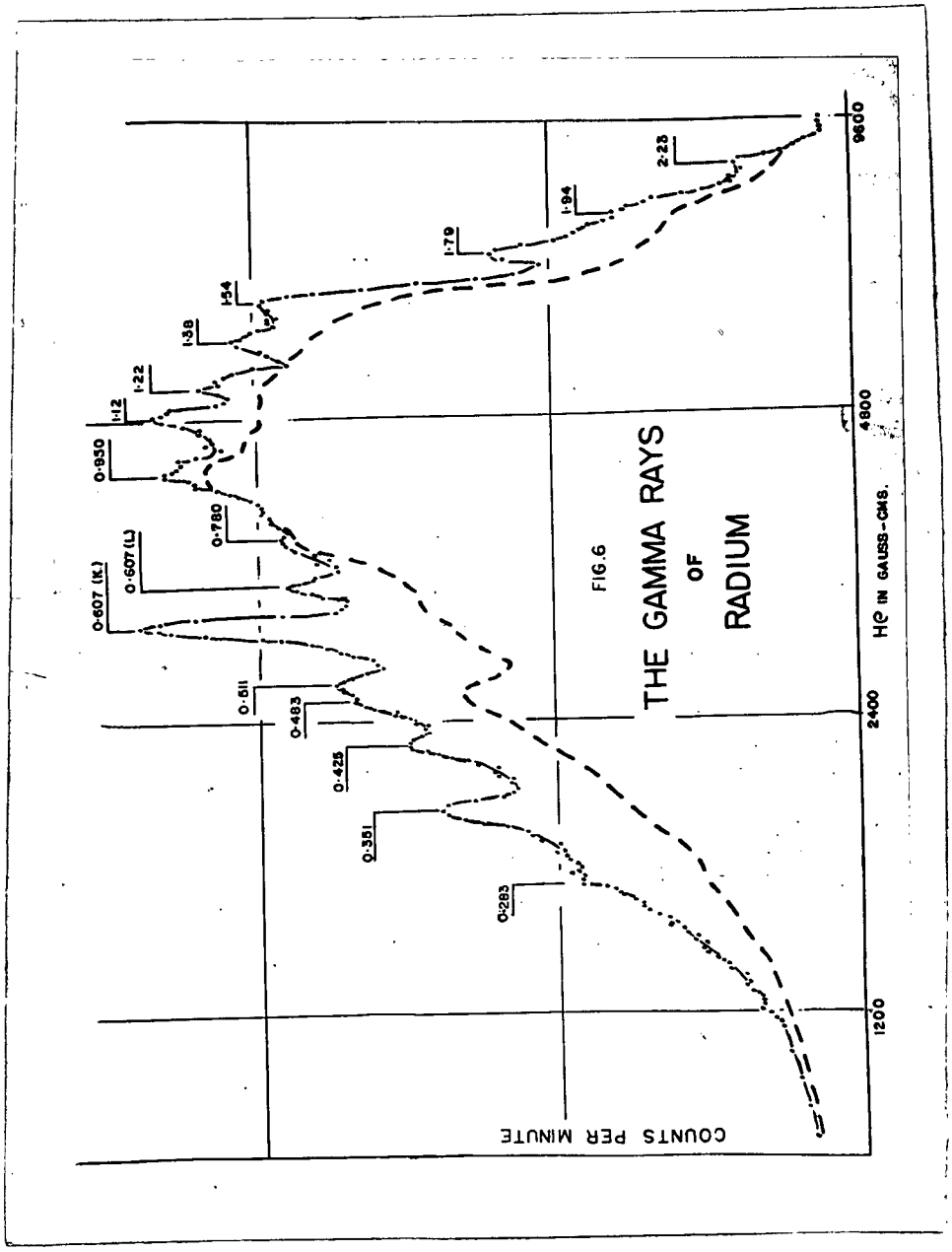
FIG.6
THE GAMMA RAYS
OF
RADIUM
COUNTS PER MINUTE
Hρ IN GAUSS-CMS.
1200
2400
4800
9600
0·283
0·351
0·425
0·483
0·511
0·607 (K)
0·607 (L)
0·780
0·930
1·12
1·22
1·38
1·54
1·79
1·94
2·28

Fig. 6

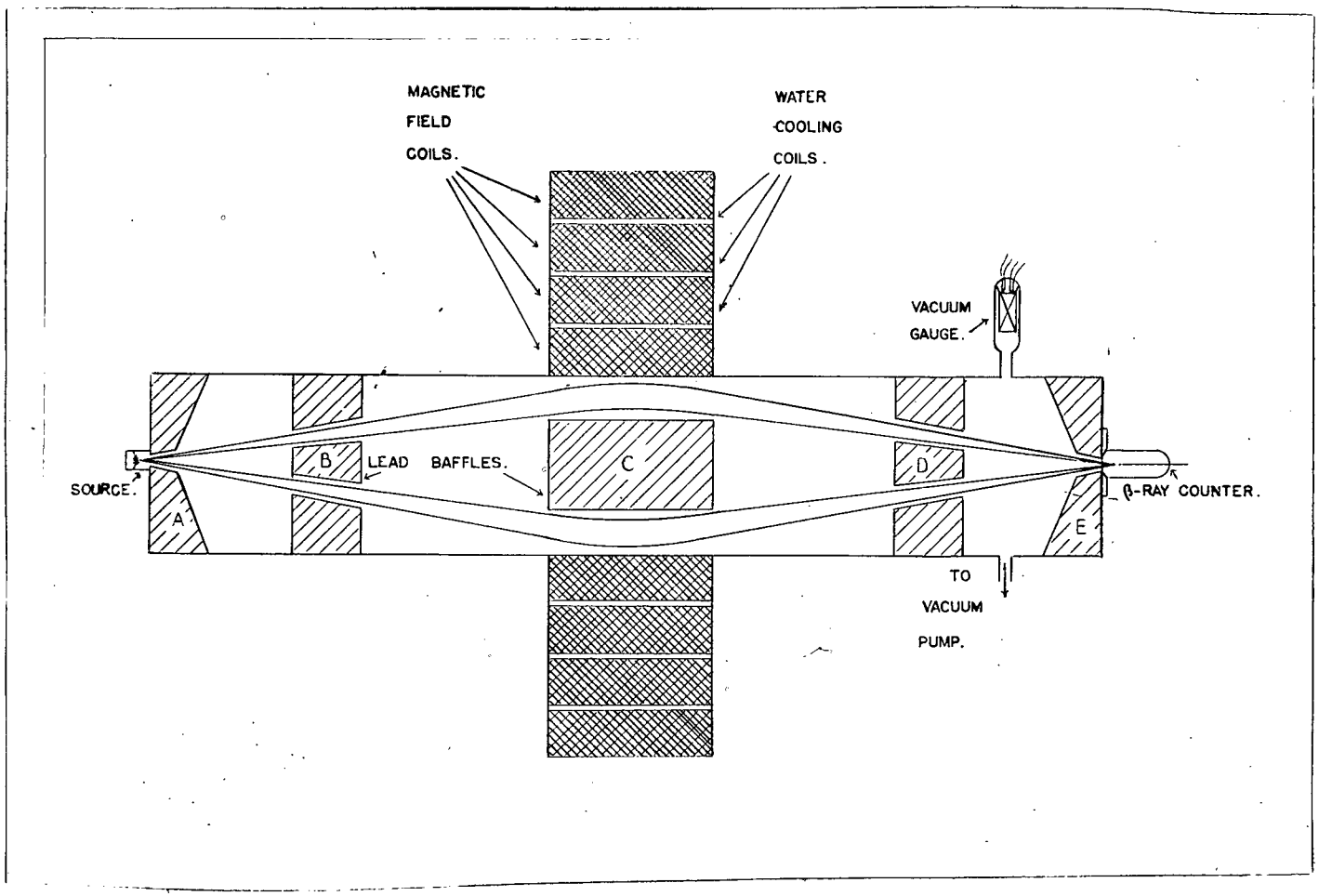

Fig. 7

Schematic Diagram of Spectrometer