c.1

RHYMING ABILITY, PHONEME IDENTITY, LETTER-SOUND KNOWLEDGE, AND THE USE OF ORTHOGRAPHIC ANALOGY BY PREREADERS

by

PATRICK DAVID WALTON

A THESIS SUBMITTED IN PARTIAL FULFILLMENT OF

THE REQUIREMENTS FOR THE DEGREE OF

DOCTOR OF PHILOSOPHY

in

THE FACULTY OF GRADUATE STUDIES

Department of Educational Psychology and Special Education

We accept this thesis as conforming
to the required standard

Dr. R. Watson

Dr. R. Jarman

Dr. N. Kishor

THE UNIVERSITY OF BRITISH COLUMBIA

September 10, 1993

In presenting this thesis in partial fulfilment of the requirements for an advanced degree at the University of British Columbia, I agree that the Library shall make it freely available for reference and study. I further agree that permission for extensive copying of this thesis for scholarly purposes may be granted by the head of my department or by his or her representatives. It is understood that copying or publication of this thesis for financial gain shall not be allowed without my written permission.

(Signature)

Department of Educational Psychology and Special Education

The University of British Columbia
Vancouver, Canada

Date September 30, 1993

DE-6 (2/88)

ABSTRACT

Recent research in phonological awareness found a strong link between rhyming ability in preschool children and later reading achievement. The use of orthographic analogy, the ability to make inferences from similarities in spelling to similarities in sound, was proposed as the mechanism to explain this relationship (Goswami & Bryant, 1990). Literature was presented that suggested the need for further research.

Four research questions were examined. First, can prereaders learn to read unfamiliar words on the basis of orthographic analogy after brief training with rhyming words? The evidence supported the view that they could.

Second, will the ability to read words by orthographic analogy be enhanced by phonological training in onset and rime, and by the use of segmented text? The brief phonological training did not increase analogy word reading over the same training without it. However, using text segmented at the onset-rime boundary for training items did increase analogy word reading.

Third, will reading by orthographic analogy vary according to the level of prereading skills (rhyming ability, phoneme identity, letter-sound knowledge)? The majority of children with high prereading skills learned to read analogy test words whereas most children with low prereading skills found the task too arduous.

Fourth, will rhyming ability make an independent contribution to reading achievement? The results were equivocal.

Rhyming ability did make an independent contribution to the number of trials taken to learn the training items. It did not when analogy word reading was the dependent variable. Phoneme identity accounted for most of the variance in analogy word reading.

Further analyses found that the ability to identify the final phoneme was the best discriminator between children who learned to read analogy test words and those who did not. A possible explanation was that children used the final phoneme to determine the sound of the rime ending rather than the last two phonemes together.

TABLE OF CONTENTS

LIST OF TABLES

LIST OF TABLES

LIST OF FIGURES

ACKNOWLEDGMENTS

I can see the face of every person who helped and I would like to acknowledge their contributions. First, my wife Lona edited the documents, critiqued the ideas, and raised our sons when I was absent.

Dr. Rita Watson contributed ideas that helped to guide the conceptual framework of the thesis and kept the research theory driven. Dr. Ron Jarman provided wisdom and assurance. Dr. Nand Kishor suggested the use of planned orthogonal contrasts.

The teachers and administration at the Child Study Centre on the University of British Columbia campus opened the doors to their classrooms and allowed the thesis to be piloted with their students. The teachers were Nancy Duggen, Lorna Kryszkiewicz, and Chava Rubenson, and the senior administrator was Dr. Glen Dixon. Kate Andersen helped as a research assistant.

A similar contribution was made by the teachers and administration of School District #24 in Kamloops, British Columbia. The teachers were Linda Froese, Darlene Phelps, June Neufeld, and Barbie Williams, and the senior administrator was Tarry Grieve.

The research was supported by a doctoral fellowship granted by the Social Sciences and Humanities Research Council of Canada.

Finally, I would like to thank the children for teaching me so much.

I. INTRODUCTION

The functional role of words in language is to convey meaning and the ultimate goal of instruction in reading is to enable the individual to acquire the ability to develop meaning from print. Although both reading and speech require some mastery of language, reading requires, in addition, a more explicit awareness of the phonological structure of words as represented by the alphabet. Unfortunately for the prereader, such phonological awareness is not an automatic consequence of speaking a language.

One of the most consistent findings of recent research in reading is the strong link between a child's skill in phonological awareness and their progress in reading. Phonological awareness is conscious access to the constituent sounds of speech and the ability to manipulate these sounds. Phonological awareness is the best single predictor of success in learning to read (e.g., Wagner & Torgesen, 1987) and this has been demonstrated not only for English, but also for French, (Alegria, Pignot, & Morais, 1982), Norwegian (Skjelfjord, 1987), Russian (Elkonin, 1973), and Swedish (Lundberg, Olofson, & Wall, 1980). The relationship holds even when extraneous variables such as age, language ability, IQ, social class, and memory are controlled (Bradley & Bryant, 1985). In addition, a candidate among potential causes of reading disabilty is a deficit of phonological processing ability (Stanovich, 1988; Vellutino & Scanlon, 1987).

Rhyming is a form of phonological awareness that involves units of sound called onsets and rimes (in the word "cat", "c" is the onset and "at" is the rime), which are between syllables and phonemes in size. Words having the same rime will rhyme (e.g., "cat", "fat") and to have this awareness, one must be able to detect the common two-phoneme segment "at". Four-year-old children (Lenel & Cantor, 1981), and even some 3-year-olds, are able to make competent judgments about rhyme (MacLean, Bradley, & Bryant, 1987). Yet preschoolers are usually unable to isolate single phonemes (Liberman, Shankweiler, Fischer, & Carter, 1974), other than when the phoneme overlaps with the onset (e.g., "c" in "cat").

There are strong grounds for believing that rhyming skill is an important predictor of later reading success. Rhyming skill emerged as the best predictor of reading in the longitudinal studies of Bradley and Bryant (1983), of Lundberg et al. (1980), and of Ellis and Large (1987). However, exactly how rhyming skill may be related to the development of reading has received little research attention.

Goswami and Bryant (1990, 1992) argue that a possible explanation of the link between rhyming and reading is that the ability to recognize rhyming words may form the basis for noticing that these words often share common spellings. A child who can hear that "bat" and "mat" rhyme could find it easy to recognize that the spelling pattern at the end of these words is the same. This ability to make inferences from similarities in spelling to similarities in sound has been referred to as the

ability to make orthographic analogies (Goswami & Bryant, 1990). Their argument is that the strong link found between rhyming and reading arises because children's experiences with rhyme help them to make orthographic analogies when they begin to read.

However, it is difficult to determine whether children just starting to read are able to make rhyme-based analogies about new words. The difficulty is this. Non-readers would not be expected to be able to make orthographic analogies because the ability to read at least some rhyming words would be required in order to identify the common spelling patterns. Sampling readers includes the confound that rhyme and orthographic analogy may develop as a result of reading experience.

Two possible solutions to this dilemma have been attempted. One solution was to show children words they are not unable to read (e.g., 'beak'), tell them what the word says, and then test to see if the child can use this clue word to read analogous words that contain the same spelling sequence (e.g., 'weak'). Studies of this type were conducted by Goswami (1986, 1988, 1990a, 1990b, 1991) and Goswami and Mead (1992). A second method was to train prereading children to read a limited set of words that can then be used, with the help of analogies, to read words that rhyme with the training set. Studies by Baron (1977) and by Pick, Unze, Brownwell, Drozdal and Hopmann (1978) followed this design.

Goswami consistently found that children were able to read words that share rimes with clue words more easily than words that did not. Her research provided evidence that young children

are able to make orthographic analogies to read new words but the link between rhyme and orthographic analogy is less clearly established. Rhyming ability was not measured in her studies (1986, 1988) on reading and analogy that included non-readers (defined as the inability to score on the Schonell Word Reading Test). Her analogy research (Goswami, 1990b) that did measure rhyming ability was conducted with a sample of readers and this precluded isolating the relationship between rhyming and orthographic analogy from the effects of reading ability.

From the second method of studying orthographic analogy and beginning reading, Baron (1977) and Pick et al. (1978) both concluded that with only limited training children are able to make orthographic analogies when reading unfamiliar words. However, Pick et al. did not take the precaution of using test words that could be read in one way if the children were making analogies and in another if they were recoding individual letters. Without this precaution, Pick et al.'s claim that the children made analogies is not convincing.

Baron (1977) taught kindergartners to rote memorize words and sounds and then tested transfer to reading new words that could be read by analogy to the trained words. Baron included two types of reading test words in his experiment, one type that could be read by analogy and another type that could not. Children's performance on the analogy words was about 90% correct, compared to 15% for the other words. Baron argued that kindergarten children are able to make orthographic analogies when beginning to read.

However, a caution is in order when considering Baron's findings. The source of the caution is that Baron's training included words presented as segmented text (e.g., 'b', 'at', 'ed'). According to Goswami and Bryant (1990) "We cannot be sure whether the children did so well [in reading analogy words] because they made a genuine analogy or ... because they applied a rule that they had just learned about a spelling sequence which represented a particular rime." (p. 68). In other words, the children may have read the analogy test words by assembling the segmented portions of text presented in the training set rather than by making an orthographic analogy.

The view that beginning readers can use orthographic analogy is contrary to the steps of reading proposed by Ehri (1991, 1992a). Ehri argues that children can make orthographic analogies only after first learning to read, which involves considerable experience with recoding individual letter sequences.

In summary, there is considerable evidence that rhyming ability is related to later reading ability and some evidence that this relationship exists because rhyming facilitates the use of orthographic analogy when reading new words. Existing research on orthographic analogy and beginning reading has a) sampled readers and so confounded reading ability with rhyme and the use of orthographic analogy, or b) sampled prereaders but not measured rhyme and the use of orthographic analogy concurrently. As well, prereading skills implicated in the use of orthographic

analogy other than rhyming, notably phoneme identity and letter-sound knowledge, have received little research attention.

The proposed study seeks to examine the question of whether children are able to use orthographic analogy when first beginning to read. Further, the relationships between rhyming ability, phoneme identity, letter-sound knowledge, and the use of orthographic analogy will also be studied. The findings could lead to a more complete understanding of the skills involved in the initial steps of reading acquisition.

II. REVIEW OF LITERATURE

Background

> And so to completely analyze what we do when we read would almost be the acme of a psychologist's achievement for it would be to describe very many of the most intricate workings of the human mind, as well as to unravel the tangled story of the most remarkable specific performance that civilization has learned in all its history. (Huey, 1908/1962, p. 6).

Despite the enormous amount of research on reading in the eight decades since Huey made this observation, the story of reading remains tangled.

It is largely accepted by the educational community that preschool reading experience is beneficial for children, yet surprisingly little research has been conducted on the subject. This was probably a result of the widely held view that reading should not be taught until the child reached a mental age of 6.5 years, the time at which they were said to be developmentally ready (Morphett & Washburne, 1931). Gesell (1940) made an even stronger argument and stated "The attempt to force reading [before age six] frequently leads to temporary or permanent maladjustment and more or less serious disturbance in the course of normal school achievement." (p. 208).

Challenges to this maturational view were originally based largely on studies of children who had learned to read through informal parental instruction before schooling. The first

studies reflecting this change began to appear in the 1960's (Clay, 1966; Durkin, 1966; Goodman, 1967; Plessas and Oaks, 1964; Reid, 1966) and relied mainly on data from the observations and interviews of early readers and their parents. In 1966 Durkin wrote:

> The literature still shows some remnants of the maturational concept of readiness, but, as a whole, articles and books are now dominated by the opposite conception, highlighting the contribution of environmental factors. (p. 48).

The research on phonological awareness and reading which reflected this changing view began with the important finding by two Soviet psychologists (Elkonin, 1963; Zhurova, 1963, cited in Ball & Blachman, 1991) that a relationship existed between phoneme segmentation abilities and subsequent success in reading. The first western psychologist to research phonological awareness and reading was Bruce (1964), who found that prereaders were unable to detect sounds within words at the phoneme level and that the ability to do so distinguished readers from non-readers. These findings were largely ignored until the 1970's when a second set of research on phonological awareness was undertaken which focused mainly on the relationships between phonological skills and reading acquisition (Baron, 1977, 1979; Calfee, 1977; Fox & Routh, 1975; Liberman et al., 1974). Consistent findings of a highly significant relationship between phonological skills and reading in turn stimulated an enormous amount of research which

is ongoing (see Goswami & Bryant, 1990, Sawyer & Fox, 1991, and Shankweiler & Liberman, 1989, for reviews).

Stanovich (1988) described the linking of phonological awareness and reading as a success story in cognitive psychology and asked the following:

> How often in cognitive developmental psychology have researchers been able to discover converging ways of isolating a theoretically intriguing process, link the process to the performance of a real-world task of critical importance, and show that the efficiency of the process in question can be brought under experimental control? (p. 7).

The literature linking phonological skills to reading achievement is striking. A host of studies have shown that the best single predictor of reading ability among preschoolers is phonological awareness (Share, Jorm, MacLean, & Mathews, 1984; Tunmer and Nesdale 1985; Wagner & Torgesen, 1987). Share et al. (1984) reported that phoneme segmentation at school entry was the best of 39 measures in predicting reading success two years later. The better children are at rhyming (Bradley and Bryant, 1983; Ellis & Large, 1987; Lundberg et al., 1980) or at manipulating phonemes (Lundberg et al. 1980; Stanovich, Cunningham, & Cramer, 1984; Tunmer & Nesdale, 1985), the quicker and more successful is their progress in reading.

Many of these studies have implicitly assumed that the skills prerequisite to reading require or at least benefit from

direct instruction. Lundberg and Hoein (1991) were more explicit when they emphasized:

> ... the importance of explicit guidance for helping children access the elusive, implicit segments of language. The mere exposure to print and the development of adequate concepts of print functions do not seem to be sufficient. (p. 89).

An alternate view holds that surrounding the child in a literate environment is sufficient for learning to read. Learning to read in this way "does not need to be 'patched' with skills instruction" and "one cannot reconcile direct instruction with natural learning." (Goodman, 1989, p. 69). The skills necessary for reading, including phonological awareness, are viewed as developing spontaneously and independently in children in literacy enriched environments (e.g., Smith, 1971). This view will not be examined in the proposed study.

The elusive segments of language referred to by Lundberg and Hoein (1991) are the sound units within whole words. These units (syllables, onsets and rimes, phonemes) vary in size and in degree of difficulty to identify and manipulate.

A great difficulty in the research on phonological awareness has been attempting to sort out the relationships between the various forms of phonological awareness and determining their precise roles in reading acquisition. The forms of phonological awareness continue to be both a major source of interest and of confusion in the literature.

Forms of Phonological Awareness

There are several sources of complication in the research on phonological awareness which make it extremely difficult to compare studies and thus come to a clear understanding of the literature. These centre around the different sizes of the sound units under study (i.e., syllables, onsets and rimes, phonemes), the varying difficulties of manipulation of the sound unit (i.e., identification, blending, segmenting, deleting), and the lack of definitional consistency. The use of different tasks across studies that combined a variety of sound units and manipulations has made the interpretation, consolidation, and comparison of research findings difficult.

Most of the early research on phonological awareness was based on the implicit assumption that syllables are linear strings of phonemes. Several studies (e.g., Leong & Haines, 1978; Treiman & Baron, 1981) found that children achieved awareness of syllables before awareness of phonemes. The idea that syllables have an internal structure suggests that these early studies may have overlooked an important form of phonological awareness. Researchers examined children's awareness of syllables and phonemes and did not consider the intermediate units of onsets and rimes.

Current research suggests that there are at least four units of sound within words; namely syllables, onsets and rimes, and phonemes (see Figure 1). Note that the stimulus items in phonological tasks are presented verbally, not as written text. Four-year-old children (Lenel & Cantor, 1981),

and even some 3-year-olds (MacLean et al., 1987), are able to make competent judgments about rhyme (note that words which end in the same rime will rhyme, e.g., "fat", "cat"). Yet preschoolers are usually unable to isolate single phonemes (Bruce, 1964; Lenel & Cantor, 1981; Liberman et al., 1974). Manipulation of words at the phoneme level involves smaller units of sound than does the manipulation of onsets and rimes. Older children, or at any rate children who have learned to read an alphabetic script, find tasks that require the manipulation of phonemes to be reasonably easy (Mann, 1986).

WORD	SYLLABLE	ONSET and RIME	PHONEME
"cat"	"cat"	"c-at"	"c-a-t"
"string"	"string"	"str-ing"	"s-t-r-i-n-g"
"wigwam"	"wig-wam"	"w-ig-w-am"	"w-i-g-w-a-m"

Figure 1. Three ways to divide words into component sounds. (from Goswami & Bryant, 1990, p. 2)

The relationship between the onset-rime sound unit and reading was examined by Treiman (1983), who showed that word games that divide spoken syllables at the onset and rime boundary are easier to learn than games which break these units up. These results were later confirmed (Goswami, 1986; Kirtley, Bryant, MacLean, & Bradley, 1989). Treiman (1992) summarized this research when she concluded that "... there may be a point at which children are fairly good at analyzing

spoken syllables into onsets and rimes but have trouble analyzing onsets and rimes into their component phonemes." (p. 70). The only exception appears to be when the onset is represented by a phoneme.

Treiman (1985) found that 4-year-olds could isolate the first sound in a word more successfully if it began with a single consonant than if it began with a consonant cluster. She concluded that children could isolate and detect single phonemes in cases where the phoneme coincides with the onset (e.g., the "b" sound in the word "bat"). This finding was offered as additional evidence for the existence of the intrasyllabic structures of onsets and rimes, as the identification of phonemes should be easier when they overlap with the onset. Thus the question answered by Treiman's (1985) analysis is not whether young children could detect phonemes, but whether some phonemes are easier to detect than others.

Note that onset-rime segmentation would involve phoneme awareness if the onset is a single consonant (e.g., "c-at"), which is often the case, so that it may represent an intermediate step between the awareness of syllables and phonemes (Goswami & Bryant, 1990).

Forms of phonological awareness become more complicated as a variety of manipulations with each of the sound units are possible, and the degree of difficulty depends on both the size of the sound unit and the type of manipulation. Task difficulty increases as the size of the sound unit decreases. For example, several researchers (Bowey & Francis, 1991;

Goswami, 1986; Kirtley et al., 1989) found that onset-rime segmentation (e.g., "cat" to "c-at") is much easier for children than phoneme segmentation (e.g., "cat" to "c-a-t").

Yopp (1988) gave 10 phonological awareness tests to kindergarten children (mean age = 5 years, 10 months) and computed the relative difficulty of phonological tasks by averaging the percentage correct for all subjects per test. The ranking from least to most difficult was rhyming, blending, identification, segmentation, and deletion. It is important, then, to accurately identify the unit of sound being examined (i.e., syllable, onset-rime, phoneme) and the type of manipulation involved in order to make comparisons across studies.

To further complicate the situation, Byrne and Fielding-Barnsley (1990) and Content (1985, cited in Morais, 1991) found that fricative consonants (i.e., "f", "h", "s") are easier for prereaders to identify than stop consonants (i.e., "d", "g", "t"). Byrne and Fielding-Barnsley suggested that fricatives offer an easier point of entry for sound identity training than do stops, and that stops may require special attention.

Researchers in the past have produced confusing results by combining items which use different sound units or require different manipulations without making these distinctions clear. For example, Bruce (1964) had 5-year-old preschoolers attempt to delete phonemes and found that none of the children produced correct answers in any of the 30 trials. Calfee

(1977), on the other hand, found that over 90% of the 5-year-old preschoolers he tested *could* delete phonemes.

These apparently contradictory findings can be explained by the differences in difficulty between the phoneme deletion tasks used in the two studies. Calfee had children delete onsets from rimes (e.g., delete "m" in "mice" to get "ice") whereas children in the Bruce study attempted to delete phonemes from onsets (e.g., delete "s" in "spin" to get "pin"). The Bruce phoneme deletion task was much more difficult and well beyond the ability of prereaders while the Calfee task obviously was not.

Phonological tasks which appear to be similar can produce markedly different results. Stanovich et al. (1984) observed poor performance when kindergarten children attempted to delete a singleton onset (e.g., delete "c" in "cat" to get "at"), but good performance on an apparently similar task in which they were required to identify the singleton onset that had been deleted for them ("at", "cat", what sound was deleted?). In this vein Blackman (1983) argued that:

> Tasks which on the surface appear to be measuring the same phenomenon may in fact require different degrees of linguistic awareness, or may differ in their cognitive requirements ... we must not talk about phoneme segmentation per se in relation to reading, but segmentation within the context of a particular task. (pp. 476-477).

A comprehensive analysis that examined the different forms of phonological awareness was completed by Yopp (1988). Yopp administered 10 tests of phonological awareness to 104 kindergarten children and reported high intercorrelations among the tasks, as did Stanovich et al. (1984).

Further, Yopp used a multiple regression analysis that used reading simple nonsense words as the dependent variable. Yopp's measure of reading acquisition consisted of a brief training session where children were told the sound of each segmented letter in a nonsense word like 'HOF', and were then given a demonstration on how to blend the letters together to form a word. This involved segmentation and blending at the phoneme level and letter-sound knowledge. The results of the stepwise regression analysis showed that Yopp's sound isolation task, which measured phoneme identification, combined with phoneme deletion, proved to be the best predictors of reading nonsense words ($R^2 = .62$).

Bryant and Goswami (1990) criticized Yopp's reading measure by stressing that children may use skills related to rhyming (i.e., onset-rime segmentation) when beginning to read. Learning to read the nonsense words used by Yopp required phoneme awareness and letter-sound knowledge and precluded the use of rhyming related skills. Further, Bryant and Goswami argued that real words may be read differently from nonsense words. Still, Yopp's idea of counting the trials taken to learn to read a list of words is a potentially useful measure of reading acquisition in prereaders. Following the

recommendation of Bryant and Goswami (1990), Yopp's reading task could be improved by using real words which are unfamiliar to the child and by including words that can be read with the assistance of rhyming skill (i.e., including words that rhyme). Such a task will be used in this study as a measure of beginning reading.

To summarize what is known about forms of phonological awareness, words can be divided into at least three different sized units of sound; syllables, onsets and rimes, and phonemes. Tasks using these sound units vary in difficulty with manipulations of the smallest units, phonemes, the most arduous. Most prereaders can manipulate syllables, onsets and rimes, and phonemes that coincide with the onset. The manipulation of phonemes, other than in the initial position of the word, is associated with reading.

The ranking of sound unit manipulation from least to most difficult is rhyming, blending, identification, segmentation, and deletion. Rhyming and the ability to identify initial phonemes are typically present before reading begins. Many prereaders are able to identify phonemes in medial and final positions of CVC words (Yopp, 1988), while phoneme blending and segmentation appear to develop with reading. The ability to delete phonemes, other than at the onset-rime division, usually develops well after reading has begun.

Related to these findings is the possibility that some phonological skills using phonemes are consequences of reading or, the more common position, that these skills develop in a

reciprocal relationship with reading (e.g., Goswami & Bryant, 1990; Perfetti, Beck, Bell, & Hughes, 1987). This explanation does not in itself, however, describe how phonological skills and reading interact. It is apparent though that close attention must be paid to the forms of phonological awareness when examining the relationships between phonological skills and reading acquisition. The puzzle that has yet to be completed in the relationship between phonological awareness and reading is determining which manipulations of which units of sound, in combination with text, are necessary for reading to begin.

Phonological Awareness Before Reading

An important consideration when studying reading with kindergartners is the necessity to determine their ability in relevant phonological skills. This is based on the assumption that the phonological abilities already possessed by prereaders are likely involved in the beginning reading process. Further, more cognitively demanding phonological skills may be built upon existing phonological abilities (e.g., Bryant et al., 1990).

What phonological skills, then, do kindergartners possess? For most kindergartners, syllable segmentation poses little difficulty (Liberman et al., 1974) and onset-rime segmentation (e.g., "cat" to "c-at") is only slightly more difficult (Kirtley et al., 1989). Few, however, are able to segment phonemes (e.g., "cat" to "c-a-t") and those who can are usually readers, whether preschool or adult (Bruce, 1964; Mann, 1986;

Morais, 1991; Wagner, Torgesen, Laughon, Simmons, & Rashotte, 1993).

The few treatment-outcome studies involving phonological awareness with kindergartners indicate that they know, or can learn, how to manipulate sounds at the onset-rime level (i.e., recognize rhymes) and to form letter-sound relationships in brief periods of time (Baron, 1977; Bryant, Maclean, Bradley, & Crossland, 1990; Byrne & Fielding-Barnsley, 1989, 1990; Calfee, 1977; Content et al., 1982; Fox & Routh, 1976; Lundberg, Frost, & Petersen, 1988; Olofsson & Lundberg, 1983, 1985). Further, the rapidity with which they learn to perform these feats suggests that they already have the prerequisite skills.

A related and also important matter to consider is whether phonological awareness can be developed by children prior to instruction in reading. Lundberg et al. (1988) and Olofsson and Lundberg (1983) provided evidence that it can. Olofsson and Lundberg (1983) trained 95 preschool children (six and 7-year-olds) in an eight week program designed to stimulate phonological awareness. The program featured daily exercises and games which involved comparing words, syllable segmentation, rhyming, and identifying the initial phonemes in words. Their conclusions were that phonological awareness among prereaders can be stimulated by systematic training and that preoccupation with letters was not of critical importance to get conscious access to the phonological levels of language.

The fact that phonological awareness can be developed without using the letters of the alphabet does not necessarily

mean that letters are unimportant. In fact, the preschool teachers in the Lundberg et al. (1988) study commented on the difficulty of teaching phonological awareness without using text. Hohn and Ehri (1983) found that phoneme segmentation was better learned by using letters rather than blank markers and Bradley and Bryant (1983) found that training preschoolers in letters and rhyming was significantly more effective in promoting later reading achievement than training in rhyming alone.

The Lundberg et al. (1988) study involved a larger number of preschool children than their earlier work (some 400) and the training period was more extensive as it included eight months of daily sessions. The training sequence of the games and exercises was easy listening games, rhyming exercises, segmenting sentences into words, segmenting words into syllables, and segmenting initial phonemes.

After a year of formal schooling following the training, the experimental group demonstrated significantly better reading ability than the control group. In addition, the experimental group made even greater gains in reading ability over the control group during the next two years, thus demonstrating Stanovich's Matthew Effect (Stanovich, 1986). A large number of skills were measured but the only significant preschool factors in predicting word recognition and sentence reading in grade three were rhyming, letter knowledge, and phoneme segmentation. These three variables combined accounted for 30% of the variance in word recognition and 36% of the

variance in sentence reading. Lundberg et al. (1988) concluded that "phonological awareness can be developed *before* reading ability and independently of it." (p. 282, italics in the original).

Byrne and Fielding-Barnsley (1990) claimed that phoneme identification can be taught to preschoolers regardless of whether the phoneme is in the initial or final position in the word, or in a cluster. This finding contradicts other research (e.g., Bruce, 1964; Kirtley et al., 1989) and could be an artifact of the particular task used to measure phoneme identity. In the Byrne and Fielding-Barnsley (1990) task, children were presented with a pair of pictures and asked which one started or ended with the target phoneme. This is quite different from being required to articulate which phoneme is in a specified position in a given word, a more stringent demonstration of phoneme identity, and the procedure more commonly used (e.g., Yopp's 1988 sound isolation task).

Bradley and Bryant (1983) combined correlational and experimental designs with a large group of four and 5-year-old preschoolers to examine the effects of phonological awareness training on reading acquisition. First, the children were tested on their ability to categorize words according to similar rhyme patterns (e.g., "sit" different from "pin" and "win"). The children who had done most poorly on the rhyming task were then divided into four groups which were trained for a total of 40 sessions over the next two years. The three treatments were a) rhyming (categorizing words by sound), b)

rhyming and letter-sound knowledge, and c) categorizing words semantically (e.g., as farm animals). The fourth group was a no-treatment control.

After controlling for age, IQ, and memory, Bradley and Bryant found a highly significant relation between the children's test scores on rhyming ability after the training and reading achievement three years later ($r = .52$). The group trained in both rhyming and letter-sound knowledge scored significantly higher than the other three groups. The group which received the rhyming training alone scored higher than the categorizing and control groups on reading achievement but the combination of rhyming training and letter-sound training was far superior. Bradley and Bryant (1983) concluded that "the experience which a child has with rhyme before he goes to school might have a considerable effect on his success later on learning to read and to write." (p. 419). This claim is supported by research which found a link between experience with nursery rhymes and later reading achievement (Bryant, Bradley, Maclean, & Crossland, 1989).

Two comments are in order when evaluating the Bryant et al. findings. First, the phoneme detection and reading measures were taken well after the rhyming tests, one and two years later, respectively. The relationships between rhyming and the other variables are based, then, on prediction rather than on concurrent development. Second, what Bryant et al. (1990) termed phoneme detection was actually a combined score of phoneme tapping (tapping out the number of phonemes in a

presented word as in the Liberman et al. 1974 task) and phoneme deletion. Phoneme deletion is a difficult form of phonemic awareness (Yopp, 1988) and given the age of the subjects, an easier form of phonemic awareness may have been more appropriate (e.g., phoneme identity). As well, it is unfortunate that Bryant et al. (1990) did not measure letter-sound knowledge so the that relationships between rhyme, phoneme awareness, and letter-sound knowledge could not be examined.

In summary, the research on phonological awareness before reading indicates that phonological awareness can be developed in preschoolers without the use of text and that the units of sound which benefit from training include syllables, onsets and rimes, and phonemes in the initial position of words. There is limited evidence that prereaders benefit from instruction in phoneme awareness other than when the phoneme overlaps with the onset. There is strong evidence that a connection exists between children's sensitivity to rhyme before they read and their reading ability some time later, although there is little research on the mechanisms which may explain this relationship.

Phonological Skills and Beginning Reading

Researchers who have examined the development of phonological skill and reading with children who are just beginning to read have produced findings that are unclear. The controversies centre around which phonological skills are prerequisite to reading, which develop reciprocally with

reading, and which are a consequence of reading. As Wagner and Torgesen (1987) state:

> It is no longer enough to ask whether phonological skills play a causal role in reading. The question now is which aspects of phonological processing are causally related to which aspects of reading ... at which point in their co-development, and what are the directions of these causal relations? (p. 192).

Unfortunately, there is no clear consensus on either the forms of phonological skill necessary for beginning reading (e.g., rhyme, phoneme blending, phoneme segmentation) or on the relationship between phonological skills, letter-sound knowledge, and reading. The examination of the prereading skills necessary for reading began with the role of letters.

Several studies in the 1970's (e.g., Jenkins, Bausell, & Jenkins, 1972; Samuels, 1972) examined whether instruction in letter-sound knowledge was sufficient to begin reading and the evidence supported the view that it was not (see Ehri, 1983, for a critique). Recent research on this topic has centred on examining which type of phonological skill in combination with letter-sound knowledge may be sufficient for reading, again with no consensus.

Tunmer and Rohl (1991) argue that segmentation skills are necessary for learning letter-sound correspondences and for making blending possible. Morais (1991) suggested the reverse order of development when he indicated that "... it is by learning the associations of sounds to letters that the child

usually initiates the acquisition of segmental awareness." (p. 51).

Perfetti et al. (1987) argued that reading enables the discovery of parallel phonological principles and that different components of phonological awareness have different relations to reading progress. The conclusions from their longitudinal study of first grade readers were that phoneme blending acts as a prerequisite for reading and that phoneme segmentation had a reciprocal relation to reading. Gains in reading enable gains in phoneme segmentation, which enable further gains in reading. Others (Wagner & Torgesen, 1987) agree that phoneme blending is a prerequisite to reading but argue that phoneme segmentation skills are a consequence of reading acquisition.

Many of the studies which have examined phonological awareness and beginning reading have sampled children after they have begun formal schooling and have some reading ability. This research has provided useful information but sampling readers precludes determining the direction of cause and effect between particular forms of phonological awareness and beginning reading. As well, teachers typically use a variety of methods to teach reading within the same classroom, making it difficult to attribute gains in phonological awareness and reading to specific training.

Recent studies that sampled prereaders and examined the relationship between phonological awareness and beginning reading was carried out by Byrne and Fielding-Barnsley (1989,

1990, 1991, 1993). These researchers examined the roles of phoneme segmentation, phoneme identity, and letter-sound knowledge in the first steps of learning to read.

In their first study, preliterate 3 to 5-year-old preschoolers were taught to read short words (e.g., 'mat' and 'sat') and then asked to choose between "mow" and "sow" as pronunciations for the written word 'mow'. According to Byrne and Fielding-Barnsley (1989), the ability to select "mow" for the correct pronunciation demonstrated acquisition of the alphabetic principle. The alphabetic principle was defined as usable knowledge that phonemes can be represented by letters, such that whenever a particular phoneme occurs in a word, and in whatever position, it can be represented by the same letter. Their most important finding was that many children who could identify phonemes and had letter-sound knowledge could acquire the alphabetic principle, while those who had only one of these skills could not.

Byrne and Fielding-Barnsley (1990) then used a training procedure similar to their previous study and confirmed the earlier results. In addition, they examined how two forms of phonemic awareness, phoneme identity and phoneme segmentation, influenced acquisition of the alphabetic principle. Their evidence indicated that training in phoneme identity was more effective than training in phoneme segmentation. Phoneme identity was successfully taught to preschoolers in their (1991) study and Byrne and Fielding-Barnsley also found that the increased levels of phonemic awareness occurred with

untrained as well as trained sounds. Byrne and Fielding-Barnsley used the same forced-choice word recognition test as in their previous research and claimed that most of the children who possessed phonemic awareness and who knew relevant letter sounds could use their knowledge to decode unfamiliar words. The claim about decoding ability must be viewed with caution. The source of the caution is that in the word recognition task, children were asked to select a pronunciation provided by the researcher for a written word. It can be argued that this is unlike the independent reading of unfamiliar text.

Their most recent study evaluated a program to teach phonemic awareness to preschoolers and then measured reading and spelling at the end of kindergarten. Byrne and Fielding-Barnsley (1993) found that "... the clearest differentiation in all measured aspects of reading and spelling resulted from dividing the children into those who understood phoneme identity at the end of preschool and those who did not." (p. 109).

The Byrne and Fielding-Barnsley research provides convincing evidence that awareness of phonemes, in combination with letter-sound knowledge, is related to beginning reading. Rhyming ability was measured in their 1991 study but inexplicably was not included in any analyses. Unfortunately, as a result the relationships between rhyming skill, phoneme identity, letter-sound knowledge, and beginning reading were not examined.

The difficulty that prereaders have in isolating single phonemes has led to the claim that reading leads to phoneme awareness (Morais, 1991). The results of several studies (Bryant et al., 1990; Kirtley et al., 1989; Treiman, 1985) on rhyme have demonstrated that prereaders do have difficulty detecting phonemes, but also that they are capable of doing so, and that the onset-rime distinction provides an explanation for their successes and failures. They succeed when the phoneme that they have to detect represents the onset (e.g., deleting the "c" in "cat") but not when the phoneme is only part of such a unit (e.g., deleting the "t" in "string").

The rime unit is also a factor in recognizing sounds. Prereaders recognize that "mat" and "cat" end in the same way, but not that "mat" and "pit" share the same ending (Bradley & Bryant, 1985; Kirtley et al., 1989). Thus, the relative ease of identifying phonemes is at least partially determined by the relationship of the target phoneme to onset and rime units the units implicated in rhyming ability.

Another interesting finding of the Kirtley et al. (1989) study was the particularly strong connection between reading and the ability to classify words by only their final consonant. They concluded that a major step in learning to read may take place when the child learns to break the rime into its constituent sounds by detaching the preceding vowel from the final consonant.

The hypothesized relationships between rhyming skills possessed by prereaders and learning to read were summarized by Goswami and Bryant (1990) as follows:

> Children are sensitive to the sounds in words long before they learn to read ... but these sounds are not phonemes, or at any rate not always phonemes. The important phonological units for young children are onset and rime. The phonological skill that they bring to reading and writing is the ability to divide a word into its onset and its rime, and also to categorize words which have the same onset or the same rime. (p. 147).

The ability to divide a word into onset and rime (e.g., "bat", "b-at") is based on rhyme and it is this skill that allows the analogy to be made between common rime endings (Bryant et al., 1990; Goswami, 1988). Goswami and Bryant (1990, 1992) propose that orthographic analogy, the ability to make inferences from similarities in spelling to similarities in sound, is the mechanism that explains the relationship between rhyme and reading. Further, rhyming ability is viewed as making an independent contribution to reading.

The literature on the relationship between rhyming ability, phoneme awareness, and reading has been summarized as follows by Bowey and Francis (1991):

> The conceptualization of onset-rime sensitivity as a natural developmental phenomenon facilitating comprehension of reading instruction, which *in turn* fosters phonemic sensitivity (where phoneme and onset/rime units do not

coincide) appears to provide a more economical synthesis of the existing literature. (p. 100, italics are in the original).

In summary, despite the proliferation of research on phonological awareness in the past decade, the exact role of phonological skills in the acquisition of reading remains unclear. The positions include the view that rhyming skills based on the units of onset and rime are the important phonological skills children bring to reading (Goswami & Bryant, 1992) and the view that phoneme identity and letter-sound knowledge are sufficient for reading to begin (Byrne & Fielding-Barnsley, 1991).

Related Models of Beginning Reading

The robust and consistent findings demonstrating a strong relationship between phonological skills and reading are sufficiently recent that comprehensive models to incorporate them are only in their genesis, although they have been anticipated. For example, Barron (1986) summarized empirical evidence for rejecting the standard dual-route model of beginning reading and its associated hypotheses of direct and indirect access. He concluded that the most promising alternative model is a single process lexical model in which acquisition of word recognition would be accounted for by interactions among orthographic and phonological units of various sizes in the lexicon. The phonological units Barron described included phonemes and rimes.

The robust findings on the relationship between phonological skills and reading place empirical constraints on future models and can be used to evaluate existing ones. Recent models (Just & Carpenter, 1987; Rayner & Pollatsek, 1989) which are comprehensive in their attempt to account for reading are notable for incorporating recent research on information processing during reading, but both models are intended to describe the cognitive processes involved during fluent reading by adults, not those of beginning reading by young children.

Current models of reading which do incorporate the research in phonological awareness are few, tend to be data driven, and centre on the phonological and letter-sound skills necessary for reading to begin. Two of the central models that include the prereading skills measured in the proposed study (Byrne & Fielding-Barnsley, 1991; Bryant et al., 1990; Ehri, 1991) will be considered here.

These models are presented in Figure 2 as Models 1 and 2 and show only the proposed relationship between rhyming skill, phoneme identity, letter-sound knowledge, and beginning reading. One model is used to represent those proposed by Byrne & Fielding-Barnsley and by Ehri because of their similarity.

Model 1, based on Byrne and Fielding-Barnsley (1989, 1990, 1991) and Ehri (1991) holds that phoneme identity in combination with letter-sound knowledge are sufficient for reading to begin. According to this position:

Neither phonemic awareness nor knowledge of the correspondences between letters and phonemes is sufficient for the emergence of initial insights into the alphabetic principle. But both in combination seem, on these results, to firmly promote its acquisition in otherwise preliterate children. (Byrne and Fielding-Barnsley, 1989, p. 317).

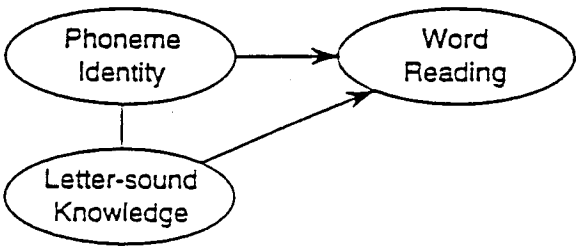

Model 1 Byrne and Fielding-Barnsley, 1991; Ehri, 1991

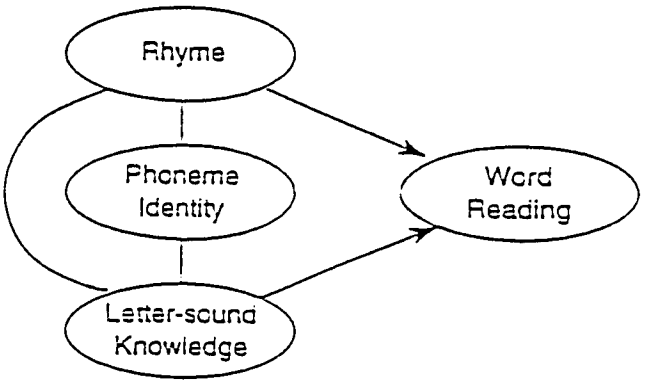

Model 2 Bryant et al., 1990

Figure 2. Two models of the links between phonological awareness, letter-sound knowledge, and reading.

Rhyming ability was not included in even the most recent descriptions of beginning reading provided by these researchers

(e.g., Byrne, 1992) and so it is not included in Model 1. In fact, Ehri (1992a) argues that considerable experience with alphabetic recoding at the phoneme level is necessary before orthographic analogies involving larger units can be made. Rhyming ability was measured in a recent study by Byrne and Fielding-Barnsley (1991) but surprisingly was not included in any analyses.

Model 1 predicts that phoneme identity and letter-sound knowledge make independent contributions to reading and that rhyming ability is of no additional benefit.

Model 2 is based on research described in Bryant et al. (1990) who argued that children's sensitivity to rhyme makes independent contributions to phoneme identity and to reading. It predicts that rhyming ability will make an independent contribution to reading after controlling for phoneme identity and letter-sound knowledge.

Bryant et al. (1990) did not include letter-sound knowledge in the three models they tested and the role for this variable is inferred from their other research. Bradley and Bryant (1983) found that training in phonological awareness and letters was more successful in producing later reading than training in phonological awareness alone. They presented this finding as evidence that training in letters and phonological awareness is more effective for later reading than training in phonological awareness alone.

It is important to note that proposing and even finding a relationship between variables does not provide, in itself, an

explanation of the relationship. This principle is particularly relevant to the proposed study when examining the relationships presented in Model 2. The mechanism proposed to account for the relationship between rhyming and reading is the use of orthographic analogy (Bryant et al., 1990; Goswami & Bryant, 1990, 1992). This is discussed in detail in the following section.

Rhyme, Orthographic Analogy, and Reading

Rhyming was found to be the best predictor of reading in several longitudinal studies that measured phonological awareness and later reading achievement (Bradley & Bryant, 1983; Ellis & Large, 1987; Lundberg et al., 1980). However, exactly how rhyming skill is related to the development of reading has received little research attention and has been more difficult to establish.

Goswami and Bryant (1990, 1992) argue that the link found between rhyming and reading arises because children's experiences with rhyme help them to make orthographic analogies when they begin to read. Rhyme has a distinctive effect by making children aware that words share segments of sounds (e.g., "-at" segment in "bat" and "cat"). This, in turn, prepares them for learning that rhyming words often have similar spelling sequences, and the use of orthographic analogy is proposed to be based on these similarities.

The implication is that the use of orthographic analogy is related to existing prereading skills, especially rhyming

ability, and potentially phoneme identity and letter-sound knowledge as well. The increased use of analogy by children who are more familiar with the relevant knowledge is supported by research on analogical reasoning with children. Two consistent findings from that literature are that children are able to solve analogies when, a) the operations are familiar (i.e., they are strong in rhyme, phoneme identity, and letter-sound knowledge) and, b) similarities in the analogous tasks are pointed out by providing hints or instructional examples (Brown, 1989; Brown, Kane, & Long, 1988).

Convincing evidence supporting the claim that rhyming ability is linked to reading through the use of orthographic analogy, however, is limited and has proven difficult to obtain. The source of the difficulty is that preliterates would not be expected to make orthographic analogies because they would not have the prerequisite experience with text. Sampling readers potentially confounds rhyming skill and the use of orthographic analogy with reading ability. It could be argued that rhyming and making orthographic analogies were linked in young readers because both are implicated in reading.

Research attempting to examine the use of orthographic analogy by beginning readers has taken two forms. In a series of studies by Goswami (1986, 1988, 1990a, 1990b, 1991; Goswami & Mead, 1992), children were shown words which they were not able to read (e.g., 'beak'), told what the word said, and then tested to see if they could use this clue word to read analogous words containing the same spelling sequence (e.g., 'weak'). Success in

the word reading which resulted was used as evidence by Goswami that the children were able to use orthographic analogy. Two of her studies will be considered in more detail.

Goswami (1986), in a study of 5 to 7-year-old children, provided a clue word (e.g., 'beak') which remained visible throughout the trial, and then asked the children to read three different types of words. The first type of word had a common rime (e.g., 'weak'), the second type had only part of the rime (e.g., 'bean'), and the third type were control words (e.g., 'bask'). The 5-year-olds did better only on the words which had a common rime (mean = 0.89 out of 6 words read) and did equally poorly on the words that contained only part of the rime and the control words. The older children, on the other hand, did manage to read some words which contained only part of the rime, but were able to read far more words which contained the complete rime. Goswami concluded that prereaders (defined as children who did not score on the Schonell Graded Word Reading Test) are only able to use spelling sequences which represent complete rimes.

Can prereaders make analogies about onsets as well? To examine this question, Goswami (1986) gave the 6-year-olds a task similar to the previous experiment except that the clue words shared an onset (always a consonant cluster) with the clue word (e.g., 'trim', 'trap') or only part of a rime (e.g., 'wink', 'tank'). Goswami found that children read many more of the first kind of analogy words than the second and she concluded that onsets, as well as rimes, play a significant role in children's analogies. However, this second study is inconclusive regarding

the use of analogy in the first steps of reading because many children in the sample were readers and this precludes determining the direction of effect between analogy use and reading.

Goswami's research seems to demonstrate that even very young children can successfully use analogy to decode new words, but a caution is in order. The experience of hearing a rhyming word might encourage children to think of other rhyming words so that a phonological priming effect may have occurred. The possibility that phonological priming explained the results of the 1986 study was examined in a later study by Goswami (1990a) with 6 to 8-year-olds. Goswami used the same technique as the 1986 study but included words that shared orthography (e.g., 'most', 'cost') and words that shared phonology (e.g., 'most', 'toast'). Goswami found that phonological priming was insufficient to account for the analogy reading she observed. Unfortunately, Goswami did not measure rhyming ability in her studies that sampled prereaders, which she indicated formed the basis of the orthographic analogies, or other prereading skills which were implicated such as phoneme identity and letter-sound knowledge. Measuring these prereading skills would have allowed for an examination of the basis for the use of orthographic analogy.

Goswami's conclusions concerning rhyming ability and reading were supported by Wise, Olson, and Treiman (1990), who used two learning conditions to train children to read words. In one condition the words were separated at the onset-rime border (e.g., "f-ork") and in the second condition words were separated

within the rime (e.g., "co-rn"). As they predicted, the children were better at reading the words which had been presented at the onset-rime division and they concluded that the onset-rime boundary is an important one for children learning to read.

A second method to examine the relationship between orthographic analogy and reading has been to train young children to read a small set of words and then test them on reading words that rhyme with the training set. Studies by Baron (1977) and by Pick et al. (1978) followed this design.

Pick et al. (1978) trained 6-year-olds to read 12 simple consonant-vowel-consonant (CVC) words and then asked the children to read CVC nonsense words which shared combinations of the same letters, including rimes. Thirteen of the 17 children in the study read some nonsense words correctly on the first transfer trial. Pick et al. (1978) concluded that children are able to make orthographic analogies with only limited training. However, Pick et al. did not use test words that could be read by letter-sound correspondence in addition to the analogy test words and without this precaution, Pick et al.'s claim that the children made analogies is not convincing.

The study by Baron (1977) is important to the proposed study and will be examined in detail. Baron had kindergartners rote memorize words and sounds (e.g., 'b', 'at', 'bat', 'ed', 'red') and then tested transfer to reading new words such as 'bed' and 'rat' (which can be read by analogy to the rimes of the trained words), and 'bad' and 'bet' (which do not share rimes, but only letters with the trained words, and therefore can only be read,

according to Baron, by combining letter-sound correspondences learned in the training words). Figure 3 shows the training and test items used by Baron (1977).

Children's performance on the analogy words was about 90% correct, compared to 15% for the other words, and Baron argued that kindergarten children are able to make orthographic analogies when beginning to read. Goswami and Bryant (1990) cite Baron (1977) as support for their view that beginning readers make orthographic analogies as they state "By and large, Baron's study does seem to demonstrate that children take to analogies very well and very soon" (p. 68). They do, however, highlight an element of Baron's training which may have allowed children to read the analogy test words by using spelling rules.

Training Sets	1	2	3	4
	b	d	s	r
	at	ug	in	ug
	bat	bug	pin	mug
	ed	am	at	an
	red	dam	sat	ran
Reading Test Sets				
Type 1. Analogy	bed (9)	dug (11)	sin (13)	rug (13)
Analogy	rat (11)	bam (11)	pat (13)	man (12)
Type 2. Letter-sound	bad (1)	bum (1)	pit (1)	rag (1)
Letter-sound	bet (1)	bag (0)	sit (2)	run (5)

Note. The number of occasions the reading test words were read correctly is in parenthesis (max. = 13).

Figure 3. Training and test words used by Baron (1977).

The source of the problem is that the letters which represented the rimes were presented as segmented text (e.g., 'at' and 'ed' in set 1, Figure 3), and then children were given explicit instruction about the sounds. Baron also included explicit training in letter-sound knowledge (e.g., 'b' in set 1). Goswami and Bryant (1990) argue that children may have simply assembled the segmented portions of text to read the analogy test words, which would not require the use of orthographic analogy. This critique is decisive in determining the treatment conditions used in this study. Still, an equally likely explanation of Baron's results is that instruction in the spelling sequence of the rimes helped draw attention to the similarities between the rhyming words and thus facilitated the making of orthographic analogies.

It could also be argued that training with the stimulus items used by Baron (e.g., 'b', 'at', 'bat', 'ed', 'red') also trained phonological awareness skills (e.g., onset-rime segmentation). The single training condition in Baron's study precluded being able to examine the effects of phonological awareness training from the training in segmented text, as they are confounded. As well, Baron did not measure rhyming ability or other prereading skills such as phoneme identity or letter-sound knowledge which may have formed the basis for the use of orthographic analogy. Finally, the sample was not screened for children who could read. These considerations are essential to the pilot and to the main study that was conducted.

Summary

Research into reading with preschool children is recent and was inhibited by the belief that teaching reading skills to young children was potentially harmful (Gesell, 1940). As this view changed, researchers investigating the phonological skills of preschool children found that prereaders were unable to segment phonemes, while young readers could (Bruce, 1964). The importance of this finding remained unappreciated until the following decade when interest in phonological awareness became widespread. The consistent finding was that phonological awareness proved to be the best single predictor of success in beginning reading.

A credible hypothesis of the relationship between phonological awareness and reading appears to be that children are sensitive to the sounds of spoken language before they begin reading, and that they can use these phonological abilities, especially rhyming, when learning to read (e.g., Bryant et al., 1990). It has also been argued that awareness of units of sound smaller than those involved in rhyming, in particular phonemes, are both necessary and sufficient for reading to begin (e.g., Byrne & Fielding-Barnsley, 1991).

There are at least two views of the relation between phonological awareness and beginning reading. One view is that children begin reading when the ability to analyze words at the phoneme level is accompanied by letter-sound knowledge. The mechanism for reading is the application of letter-sound correspondences and the necessary skills are phoneme awareness

and letter-sound knowledge (Byrne, 1992; Byrne & Fielding-Barnsley, 1989, 1990, 1991, 1993; Ehri, 1991).

A second view is that rhyme makes an independent contribution to reading and that rhyme related skills (i.e., onset-rime segmentation, initial phoneme identity), in combination with letter-sound knowledge, are related to beginning reading. Orthographic analogy, the ability to make inferences from similarities in spelling to similarities in sound, is proposed to be the mechanism which explains this relationship. Rhyming skill facilitates the use of orthographic analogy as words that rhyme often share similar text, the rime ending.

There have been few studies on the use of orthographic analogy in beginning reading, which is surprising given the potential theoretical and practical implications. However, this area of research is recent and has inherent difficulties related to sampling. If readers are sampled, then the use of orthographic analogy is confounded with reading ability and the direction of the relationship between reading and analogy cannot be determined. Prereaders, on the other hand, would not be expected to use orthographic analogy as some experience with reading is necessary before children could benefit from noting similarities in text.

One attempted solution to this dilemma has been to teach children to read a clue word and then test to if this enables them to read other words, some of which share a spelling pattern with the clue word (e.g., Goswami, 1986, 1991). These studies

found that children were able to read more words that shared a common rime with the clue word than test words that did not. The use of orthographic analogy was inferred on the basis of the similarities in text between the clue word and the successfully read test word. However, in Goswami's studies which included prereaders, the prereading skills upon which the use of orthographic analogy were proposed to be based (rhyming skill, initial phoneme identity, letter-sound knowledge) were not measured.

Another approach to studying orthographic analogy in beginning readers was demonstrated in a study by Baron (1977). Baron trained kindergarten children to read a set of letters and words and then immediately asked them to read two types of words. One type of word could be read by analogy to the training set whereas the other test words required the recoding of individual letters. Baron found that over 90% of the children were able to read the analogy words while only 15% read the words that required letter-sound correspondence.

Baron's claim that the children read the words by analogy would be convincing except for two cautions. First, the training items contained segmented text and Goswami and Bryant (1990) argued that the children may have simply assembled the spelling sequences to read rather than have read using orthographic analogy. Even if Baron's claim that the children read by analogy is accepted, the use of segmented text in training items implicitly gave children phonological training with onsets and

rimes. As a result, the effects of segmented text and phonological training are confounded.

Secondly, Baron did not screen his sample for readers.

Finally, Baron did not measure potentially relevant prereading skills (i.e., rhyme, phoneme identity, letter-sound knowledge) so that the relationship between ability in these prereading skills and the use of analogy to read was not examined.

III. PROBLEM

Statement of the Problem

The review of literature illustrated the need for further research on the use of orthographic analogy and beginning reading. More specifically, the following three questions have received little research attention. First, can prereaders use orthographic analogy in the beginning steps of reading? Second, what is the relationship between training with rhyming text and prereaders' ability to use orthographic analogy. Third, how is the use of orthographic analogy related to the prereading skills of rhyming, phoneme identity, and letter-sound knowledge?

Existing research has provided evidence that young readers can use orthographic analogy (Ehri, 1992a; Goswami, 1988). However, sampling readers has made it unclear whether orthographic analogy can be used in the first steps of reading, or is the result of reading experience. Studies sampling prereaders (Goswami, 1986, 1988) have concluded that some children can use orthographic analogy when first starting to read. Unfortunately, these studies are few and the potentially relevant prereading skills of rhyming, phoneme identity, and letter-sound knowledge were not measured, so the basis for the use of orthographic analogy was not examined.

Baron (1977) was extremely successful in training kindergarten children to read words by orthographic analogy (90% correct) but the segmented text used in his training allowed for an alternative explanation of the results. Goswami and Bryant

(1990) cite Baron's (1977) study in support of their views but also suggest that Baron's readers may have read the analogy words by assembling the segmented text, rather than by using orthographic analogy. In addition, Baron did not screen the sample for readers or measure potentially relevant prereading skills.

The question of the use of orthographic analogy in the first steps of reading has important theoretical and practical implications, yet it remains largely unstudied.

Rationale

There is evidence that kindergarten children are able to make orthographic analogies when beginning to read (Baron, 1977; Goswami, 1986, 1990a). Also, there appears to be a link between rhyming ability and orthographic analogy in young children who are readers (Goswami, 1990b). These researchers and others (e.g., Bryant et al., 1990) argue that beginning readers ability to use orthographic analogy is based on rhyming skill.

To examine the question of whether children are able to make orthographic analogies when they first start to read, it is clear that a study is required that, a) samples prereaders, b) includes test words that could identify if the children were making analogies or if they were recoding individual letters, and c) examines conditions that may instill and enhance the use of orthographic analogy. In addition, measuring skills such as rhyming ability, letter-sound knowledge, and phoneme identity

would allow for an examination of the relationship between these prereading skills and the use of orthographic analogy to read.

Sampling prereaders is preferred as it allows the relationships between prereading skill and the use of orthographic analogy to be studied without the confounding effect of reading ability. The proposed study will sample prereaders.

Testing for reading with words that can identify if children were making analogies or if they were recoding individual letters is necessary or else any claim that children used orthographic analogy to read would not be convincing. Baron (1977) accomplished this by using one set of test words which could be read by analogy (analogy test words rhymed with the training words) and another set which could not (letter-sound test words did not share ending sequences with training words). The proposed study will use the same two types of reading test words as Baron (1977) to provide evidence to identify the strategy children used to read the test words. This will also allow comparisons to be made with Baron (1977).

Baron's training was extremely effective in promoting beginning reading regardless of the skills used by the children to read the analogy words. It is likely that the children made orthographic analogies and Baron's (1977) training provides a useful model which could be modified to study orthographic analogy and rhyming in beginning reading. However, the stimulus items used in Baron's training sets make it impossible to determine whether the analogy word reading resulted from the benefits of presenting the words in visual segments, from the

implicit phonological training children would receive in learning these segmented words, or the combination. As well, the use of segmented text allows for the possibility that the analogy test words were read by piecing together the segmented stimulus items, not by the use of orthographic analogy (Goswami & Bryants's criticism). The study seeks to examine the use of orthographic analogy by prereaders without the confound of segmented text. For this reason, Baron's original training sets were modified to contain only whole word text.

Modifying Baron's study to comply with the previously stated criteria would mean, a) screening the sample for readers, b) providing conditions that can examine the effects of orthographic training with whole words, and c) measuring rhyming ability, phoneme identity, and letter-sound knowledge. To satisfy b), it is necessary to provide a training condition or conditions which use whole words while still following Baron's training as closely as possible. Any new conditions would require, then, deleting the segmented text from the training sets used by Baron (e.g., 'b', 'at', 'ed' from set 1, Figure 4).

The reduced training sets, however, would not allow for training in orthographic analogy as the remaining two words do not share common text (e.g., reduced set 1 = 'bat', 'red'). This problem can be solved by adding words that rhyme with the two remaining words in the training set. This would allow for the possibility of experience in orthographic analogy before the children are tested on this ability (see Figure 4). To accommodate these changes, five new words were added to Baron's

four training sets. The endings upon which the analogies could be made were unchanged as were the words in Baron's reading test. Figure 4 shows set 1 of Baron's (1977) four training sets and the proposed set 1 for the proposed training conditions.

Set 1 Training Items		Baron's	Proposed
		b	bat
		at	mat
		bat	red
		ed	ted
		red	
Set 1 Reading Test Words			
Type 1.	Analogy	bed	bed
	Analogy	rat	rat
Type 2.	Letter-sound	bad	bad
	Letter-sound	bet	bet

Figure 4. Baron's and the proposed training items for set 1.

Successfully training prereaders to read analogy test words using only whole words during training would preclude Goswami and Bryant's (1990) caution that subjects may have read the analogy words by assembling segments of training text. Training consisting solely of teaching prereaders to read whole words, some of which rhyme, describes one of the proposed training conditions.

An inspection of Baron's training reveals that the segmented training items (e.g., 'b', 'at', 'ed') divide the whole training words at the onset-rime boundary (see Figure 4). It is possible that learning to read these training items provided phonological

training with onset and rime. If this was true, then the phonological training could have been a key element in the analogy reading that followed. This analysis is consistent with the view that orthographic analogy in beginning readers is related to their rhyming ability (e.g., Goswami, 1990b). The possibility exists that the phonological training with onset and rime was the key feature of Baron's training and accounted for the subsequent analogy reading.

To examine this question, two proposed training conditions will incorporate phonological training in onset and rime. Again, the Goswami and Bryant (1990) caution of Baron's training is removed as the training words are not presented as segmented text. This suggestion would likely be supported by Treiman (1991) who recommended that "Research is needed to determine whether phonological awareness training programs that include an onset/rime step are more successful than those that do not." (p. 164).

The third recommended modification to Baron's study is to measure the prereading skills of rhyming, phoneme identity, and letter-sound knowledge. The reasons for this addition are that Goswami and Bryant (1990, 1992) argue for a specific relationship between rhyming and the ability to use orthographic analogy. Measuring rhyming ability would allow for an examination of this hypothesis. Also, making an orthographic analogy on the basis of CVC rhyming words (e.g., 'bat', 'rat') would potentially involve phoneme identity and letter-sound knowledge, as the onsets of these words are phonemes represented by letters. Measuring

phoneme identity and letter-sound knowledge as well as rhyming skill would permit a study of the relative contribution of these prereading skills to the use of orthographic analogy.

In summary, the proposed study responds to the need for further research on beginning reading by training prereaders under conditions that can examine the use of orthographic analogy in the first steps of reading. In addition, the prereading skills of rhyme, phoneme identity, and letter-sound knowledge will be measured to examine their roles. The study will allow for an examination of whether prereaders are able to make orthographic analogies, the conditions under which this ability may be instilled or enhanced, and the relationships between the relevant prereading skills and the use of orthographic analogy.

A pilot study was carried out to provide a preliminary test of the proposed hypotheses and to practice the testing and training procedures. The hypotheses tested in the pilot study are presented in the following section.

Hypotheses

The following hypotheses were tested in the pilot study. The hypotheses for the main study are very similar but also include the recommendations of the pilot study.

1. Prereaders can learn to read words on the basis of orthographic analogy.

Two conditions must prevail before evidence can be provided in favour of this hypothesis. First, prereaders must be able to read significantly more analogy reading test words following

training compared to their pretest scores (subjects were initially screened for reading ability). Second, they will learn to read significantly more analogy reading test words than letter-sound correspondence test words. This second condition is also necessary because it provides evidence that children were using orthographic analogy to read the analogy reading test words rather than by recoding individual letters.

A positive finding would provide evidence to support the view that children can use orthographic analogy when first beginning to read (Goswami & Bryant, 1990, 1992) and would run counter to the position that children are able to use orthographic analogy only after considerable experience with alphabetic recoding at the phoneme level (Ehri, 1991, 1992a).

2. The ability to read words by orthographic analogy will be enhanced by training in orthographic analogy, and by phonological training in onset and rime.

a) Whole word training (Condition I) will instill the ability to read words by orthographic analogy.

b) Phonological training in onset and rime (Condition II) beyond whole word training will enhance the ability to read words by orthographic analogy more than whole word training alone.

c) Phonological training in onset and rime with reference to text (Condition III) will enhance the ability to read words by orthographic analogy more than Condition II training alone.

Findings in support of these hypotheses would provide evidence that limited training with whole words is sufficient for prereaders to learn to read words using orthographic analogy, and

that this ability is further enhanced by phonological training with onset and rime.

3. The ability to read words by orthographic analogy will vary according to the level of prereading skills (Low or High).

A finding that children in the High prereading group are able to read more analogy test words than the Low group would be evidence that one or more of the measured prereading skills (rhyming ability, phoneme identity, letter-sound knowledge) are important to the use of orthographic analogy. It would also support the view that children perform better on analogical tasks when they are familiar with the operations and objects introduced (Brown, 1989; Brown, Kane, & Long, 1988).

IV. METHOD

A pilot study was conducted at the Child Study Centre on the University of British Columbia campus. The method and results of the pilot study will be presented before describing the main study.

Pilot Study

Subjects

The initial sample included 21 preschool children. The children were pre-tested for reading ability, and any able to read more than one of eight words selected from Baron's (1977) word reading test (bed, man, bet, dug, sin, pit, bag, rag) were screened from the study. The eight words were printed in 1" lower case letters on an 8" by 11" card. The card was presented to the children individually and they were asked to look at the words and were encouraged to try to read them. Eighteen children were unable to read any words, one child read one word, and two were excluded from the study because they read two or more words.

There was insufficient time to complete the training with two children. Two others declined to leave their classroom on two consecutive occasions and were dropped from the experiment at that point. These declines appeared to reflect the child's reluctance to leave an interesting classroom activity rather than a negative response toward the training, which they seemed to enjoy. Results are reported for the remaining 15 children.

The average age of the 15 children (9 girls and 6 boys) was 4 years 11 months and the age range was 4 years 3 months to 5

years 4 months. Based on preschool teacher information, all children had English as a first language and none had any known language impairments.

Expressive language and vocabulary skills were assessed with the Peabody Picture Vocabulary Test-Revised (PPVT-R) (Dunn & Dunn, 1981). The mean standard score (average for the population is 100) on the PPVT-R was 114.67 (SD = 13.42). The high PPVT-R scores of the children likely reflects the high socioeconomic status of the population from which the children were drawn.

Stratified random assignment, based on the pretest scores of rhyming, phoneme identity, and letter-sound knowledge was used with the preschool sample. The pretest scores were converted to z scores and then added for each subject. Subjects were then assigned to High or Low prereading skill groups based on the sign of the added z scores with positive z scorers going to the High group and negative scorers to the Low group. Then, children were randomly assigned to one of the three treatment conditions from within each stratified prereading skill group.

Design

The study used an experimental design with three treatment conditions. The treatment conditions were crossed with prereading ability levels (Low and High) based on the pretest scores of rhyming, phoneme identity, and letter-sound knowledge. This produced a 2 by 3 (2 prereading skill groups by 3 treatment conditions) factorial design.

The dependent variable for the ANOVA was the ability to read the analogy reading test words. Reading the letter-sound correspondence test words and the number of trials taken to learn to read the training words to criterion were used as dependent variables in related analyses.

Procedure

The researcher and an assistant visited the children at the participating preschool for three days before beginning any testing or training.

The children were initially screened with words selected from Baron's (1977) reading test and were then given the PPVT-R. In the second session, children were pretested for the three prereading skills of rhyming, phoneme identity, and letter-sound knowledge. The children were grouped (Low or High) according to their prereading skills and then assigned to one of the three treatment conditions.

The treatments consisted of teaching the children four sets of words and then, following each training set, testing the children for word reading. All training was provided by the researcher or an assistant. There were four sets of words in each training condition (see Figure 5) and the order of training set presentation was random within each treatment condition.

The training sessions lasted less than 20 minutes each and one or two sets of training words were taught per session. Testing for reading immediately followed the training. The primary emphasis of the training was that the sessions with the

children were enjoyable and only took place when the children were amenable.

Training Sets		1	2	3	4
		bat	bug	pin	mug
		mat	mug	tin	bug
		red	dam	sat	ran
		ted	ram	mat	pan
Reading Test Sets					
Type 1	Analogy	bed	dug	sin	rug
	Analogy	rat	bam	pat	man
Type 2.	Letter-sound	bad	bum	pit	rag
	Letter-sound	bet	bag	sit	run

Figure 5. Training and reading test sets for the pilot study.

Condition I

In the first training condition, children were presented with a set of training words and accompanying drawings (see Appendix B) which illustrated the referent of each printed word. The training words were printed in lower case on 2" by 4" cards in a 1" san serif font, one word per card. The illustrations, one for the referent of each printed word, were on separate 2" by 4" cards. The stimulus items were identical for all training conditions.

The four words in each training set were presented in a column with the rhyming words adjacent to each other and the illustrations directly to the left of the printed words. The researcher said "We are going to play a game with pictures and

words. The words will help you to read other words." The researcher then introduced two puppets and offered one to the child, which was invariably accepted. The researcher, through the puppet, then named each object pictured and drew attention to the accompanying text. Children were asked to try and see how the words were the same.

After two namings of the illustrations and paired text, the illustrations were removed and the children were invited to read the text, with corrective feedback, to a criterion of two successive readings of the four training words without error. The number of trials taken to reach the criterion was recorded for each training set to a maximum of 12 trials.

Immediately after reaching criterion with the four training words, two training words were removed (e.g., 'mat' and 'ted' in set 1) to match the whole words use by Baron (1977). The remaining two training words were named by the researcher as a reminder. Then the children were asked to read the test words (i.e., 'bed', 'rat', 'bad', and 'bet' in set 1), which were presented individually and in the sequence shown in Figure 5. Following Baron, the training words (e.g., 'bat' and 'red' in set 1) remained visible as a reference for the children, who were told that the training words could help to read the test word.

If children said they did not know the test word, they were encouraged to compare the test card to the training cards. Incorrect and correct responses were recorded for each test word and, following Baron, corrective feedback was given following each incorrect response. In Baron's study the corrective

feedback consisted of being given the correct answer with an explanation, while in the pilot study, the correct answer was given without an explanation.

Compared to Baron's (1977) training, Condition I did not present the training words as segmented text and provided considerably less information regarding the similarity among training and test words. These changes preclude using the strategy of reading the test words by assembling segmented spelling sequences (Goswami and Bryant's criticism of Baron's training). As such, Condition I would be a stringent test of beginning reader's ability to use orthographic analogy.

Condition II

The procedures for Condition I were followed in Condition II except that the trials to criterion was followed by phonological training in onset and rime. The children were invited to play a game with sounds and were told that the puppet could say the training words so that they have two sounds. One puppet (operated by the researcher) pointed to the whole word and said the onset of the word (e.g., "b"). The other puppet (operated by the child) was asked to imitate the researcher. This process was followed by training in segmenting the rime (e.g., "-at") and in onset-rime blending (e.g., "b-at", "bat"). This training was repeated twice for each word in sequence.

Immediately following the onset-rime training, two training words were removed (as in Condition I) and the children were asked to read the test words.

Condition III

The procedures for Condition II were followed in Condition III except that during the phonological training in onset and rime, the researcher pointed to the segment of the word that represented the onset and rime as they were being segmented and blended. This allowed for a more explicit connection to be made between the representation of the spellings of onsets and rimes and their corresponding sounds. Note that unlike Baron (1977), whole words were kept intact and were not presented as segmented text.

In summary, the three training conditions differed in the following ways:

1. In Condition I, children heard only the entire words and received no phonological training.
2. In Condition II, training in whole words was followed by phonological training in onset and rime.
3. In Condition III, training in whole words was followed by onset-rime training with attention drawn to the relevant text.

Tests For Prereading Skills

Bowey and Francis (1991) found that task order was a factor when both rhyming and phoneme awareness tasks were used. They found that performance on the rhyme task was lower when it followed the phoneme task than when it preceded it. Their explanation was that when the phoneme task was presented first, prereaders attempted to solve the rhyme task by focusing on phonemic units. To preclude this interference, the testing order

for the pretests and was rhyming ability, letter-sound knowledge, and then phoneme identity.

Rhyme Test

A version of the rhyme-oddity task used by Bradley and Bryant (1983) was used in the pilot study to measure rhyming ability. Following Bryant et al. (1990), the added feature was the use of pictures to remove the memory load. The initial letter was changed in seven of the 48 stimulus items to allow for illustrations. None of the non-rhyming words were altered.

The test consists of 2 practice trials with corrective feedback and then 10 experimental trials without corrective feedback. In each trial the child was given four words with pictures, where three rhyme and the fourth does not (see Appendix C). The child's task is to detect the word that does not rhyme and say it back to the researcher.

The directions followed Bradley and Bryant (1983). First, the experimenter asked the child if they knew any nursery rhymes. Then the experimenter suggested a rhyme and encouraged the child to produce rhyming words with the following conversation:

Do you know Hickory dickory dock?

Hickory dickory dock, The mouse ran up the ... ?

Do you know Jack and Jill?

Jack and Jill, Went up the ... ?

Then, the experimenter and the child alternately produced rhyming words, until the experimenter introduced a word that was blatantly incorrect (e.g., "hat", "rat", ... "table"). If there

was no quick negative response from the child, the error was pointed out. Then the experimenter said:

> Now I am going to show you four words with pictures, and I want you to tell me which word does not sound like the others. Wait until I have said all the words before you tell me which one it is. Fan, cat, hat, mat.

The practice items were:

fan cat hat mat leg peg hen keg

The test items were:

pin tin sit fin doll hop top pop bun hut gun sun

map cap tap pal pack tack sad back wig pig pin dig

weed peel seed lead men red bed fed sand hand land bank

sink mint pink wink

The mean for rhyming in the pilot study was 5.73 (maximum score = 10) and the standard deviation was 2.52. In Bradley and Bryant's (1983) sample, which included only 5-year-olds, rhyming was normally distributed with a mean of 6.67 and a standard deviation of 2.33. Note that their test for 5-year-olds did not use illustrations although they recently revised their test for 4-year-olds to include illustrations in order to remove the memory load (Bryant et al., 1990).

Letter-Sound Knowledge Test

Children were presented with two 8" by 11" cards which listed the letters of the alphabet in alphabetical order in a 1" san serif font. One card listed the letters from 'a' to 'o' and the second card listed the remaining letters. The letters were

presented in lower case to match the stimulus items used in the training and reading testing sets. The children were asked to provide the sound of individual letters. Children who responded with the name of the letter were asked for the sound of the letter. Vowels were scored correctly if they were sounded long or short and the letter 'c' was scored correctly if sounded as "k" or "s".

Children in the pilot study either had little or no letter-sound knowledge (9 children scored 0 or 1), or knew many letter-sounds (the remaining 6 children knew 10 to 21 letter-sounds). The mean for letter-sound knowledge was 6.93 and the standard deviation was 9.06.

Phoneme Identity Test

The Yopp (1988) sound isolation test was used to measure phoneme identity. In Yopp's study it had the highest predictive correlation with a subsequent test of learning to read novel words ($r = .72$) and the reliability with 5-year-olds was .84 (Cronbach's alpha).

The test measures the ability to identify phonemes in the initial, final, and then medial positions. The scores are summed to produce a total score for phoneme identity (maximum score = 15).

The test consisted of one practice trial with corrective feedback and then 15 experimental trials, also with corrective feedback. In each trial the child was given a word and then

asked to identify the initial, final, or medial sound, with five words given for each condition.

Directions for the practice item following Yopp (1988) were:

> I am going to say a word, and you tell me what sound the word starts with. Let's try one for practice: Jack. What sound does Jack start with?

The directions for the identifying the final and medial phoneme paralleled the directions for identifying the initial phoneme, with the words "food" and "sat" as practice items, respectively.

The test items were:

Initial sound - car rose name you sleep

Final sound - dog pencil late bean go

Medial sound - hot than keep cup pig

Identifying phonemes was difficult for many of the children in the pilot study and three were unable to identify any phonemes. The mean for phoneme identity was 3.87 and the standard deviation was 3.91. More phonemes were identified in the initial position (36) than in the final (13) or medial (9) positions. In Yopp's study, which included only 5-year-olds, the mean for phoneme identity was 8.77 and the standard deviation was 3.74.

Tests For Dependent Variables

Trials to Criterion

The researchers noticed during the first day of training that the number of trials taken to learn to read the four

training words appeared to vary with the level of prereading skills. Some children in the High prereading skills group were able to read the training words immediately after the two practice trials whereas others in the Low group were unable to read the training words even after 12 practice trials. All children received corrective feedback during this training.

The decision was made to record the number of trials the children took to reach the criterion of reading the training words (data was not collected on the first training set for the 8 children trained on the first day). This measure of reading acquisition provided an additional dependent variable to study the relationships between the prereading skills and the ability to learn to read words. A similar measure was used by Yopp (1988) as a test of initial reading acquisition.

The words in the training sets were the same for all treatment conditions. After two namings of the illustrations and paired text, the illustrations were removed and children were invited to read the text with corrective feedback to a criterion of two successive readings of the four training words without error. The number of trials taken to reach the criterion was recorded for each training set to a maximum of 12 trials.

Scores on the test could range from 0 to 10. Children who successfully read each word on the first two trials obtained a score of 10. Children who successfully read each word on the third trial received a score of 9, and so on. A score of 0 signified that the child was unable to read the words correctly even after 12 trials. The number of trials taken to learn the

training words for each set were averaged to obtain an overall trials to criterion score.

Four of the children in the Low prereading skill group occasionally adopted a strategy of memorizing the words without looking at the text during one or two of the training sets. This strategy was more effective for these children than attempting to read the text, as it reduced their trials to criterion on the occasions it was used. This was problematic because it reduced the amount of experience with the text which would later be necessary to read words in the reading test.

The mean score for the trials to criterion for the pilot study was 7.34 (SD = 2.72) out of 10, with higher scores denoting fewer trials.

Analogy Word Reading

The reading test words were presented to the children immediately after they had reached the trials to criterion on the training words, or were unable to learn the training words after 12 trials with corrective feedback. The test words were presented one at a time on individual cards in 1" san serif font. If children said they did not know the test word, they were encouraged to compare the test card to the training cards. Corrective feedback was given following each incorrect response.

Two training words were visible to the child (e.g., 'bat' and 'red' in set 1) during the attempt to read the analogy test words. The analogy test words ('bed' and 'rat' in set 1) rhymed with one of the training words and so could be read by analogy.

If the child could make the inference from similarities in spelling to similarities in sound (i.e., the common '-ed' and '-at' text represents common sounds), this would help to read the analogy test words. Note that the analogy is based on rhyme and therefore on the spelling sequence that represents the words' rime.

Letter-sound Correspondence Word Reading

The letter-sound reading test words were presented to the children immediately after the analogy reading test words. The letter-sound reading test words (e.g., 'bad' and 'bet' for set 1) do not share any ending spelling sequences with the training words, and therefore cannot be deciphered by analogy based on rhyme. There are two possible explanations that could account for the reading of the letter-sound test words. First, the children can read these words by recoding individual letters. Second, they may make analogies about segments of speech and spelling patterns that cut across the onset-rime division (e.g., the training word 'bat' and the test word 'bad' both begin with 'ba-'). Segmentation which cuts across onsets and rimes is much more difficult for children than segmentation at the onset-rime boundary (Kirtley et al., 1989). If a significant number of letter-sound words are read, both of these explanations will be considered.

Results

Table 1 presents the pretest data for the 15 children in the pilot study. The means and standard deviations are shown

separately by prereading skill groups. The prereading groups were determined by the scores on rhyme, phoneme identity, and letter-sound knowledge (z scores for each variable were summed).

Table 1. Pretest Scores for Prereading Skills Groups

	Prereading Skills Group		
	Low	High	Total
Measure	Mean(SD)	Mean(SD)	Mean(SD)
Age[a]	57.12(4.67)	61.57(2.94)	59.20(4.46)
PPVT-R[b]	108.63(10.21)	121.57(13.94)	114.67(13.42)
Rhyme	4.75(2.12)	6.86(2.61)	5.73(2.52)
Phoneme identity	1.25(1.17)	6.86(3.81)	3.87(3.91)
Letter-sound	.25(.46)	14.57(7.98)	6.93(9.06)

Note. n = 15.
[a]Age is in months.
[b]PPVT-R scores are standardized.

Two-tailed independent t-tests found that the groups differed significantly on age, $t(13) = 2.17$, $p < .05$, phoneme identity, $t(13) = 3.98$, $p < .01$, and letter-sound knowledge, $t(13) = 5.10$, $p < .001$ but not on the PPVT-R, $t(13) = 2.02$, $p = .06$, or on rhyme, $t(13) = 1.76$, $p = .11$.

Rhyme appeared to be normally distributed although caution is in order due to the small sample size. Phoneme identity had a slight floor effect and letter-sound knowledge appeared to be distributed bimodaly rather than normally. Five children were able to identify phonemes but had no letter-sound knowledge, while the reverse was true for only one child.

Table 2 shows the correlations among the pretest scores and the trials to criterion reading measure. These correlations must be viewed with caution due to the small sample size (n = 15).

Table 2. Correlations Among Pretests and Trials to Criterion

Measure	1	2	3	4	5	6
1. Rhyme	-					
2. Letter-sound	.39	-				
3. Phoneme id.	.51	.89***	-			
4. PPVT-R[a]	.66**	.54*	.68**	-		
5. Age	.72**	.40	.54*	.81***	-	
6. Trials to Criterion	.65**	.49	.53*	.49	.47	-

[a]PPVT-R are raw scores.
*p < .05. **p < .01. ***p < .001.

The analogy and letter-sound measures of reading were not included in the correlation analysis because they seriously violated the normality assumption (10 children did not score on analogy or letter-sound reading).

Predictably, age was highly correlated with the PPVT-R scores and to rhyming ability as well. Rhyming also produced the highest correlation with the trials to criterion measure. Note also that phoneme identity was highly correlated with letter-sound knowledge.

Orthographic Analogy and Beginning Reading

A primary question examined in the pilot study was whether beginning readers are able to use orthographic analogy in the initial steps of reading. Two conditions would have to present before evidence for using orthographic analogy would be convincing. First, children would have to benefit from the training and be able to read a significant number of the analogy reading test words compared to their pretest scores (recall subjects were initially screened for reading). Second, they would also have to be less successful at reading the letter-sound correspondence test words. The second condition is also necessary because it is evidence that the children used orthographic analogy to read the analogy test words rather than by recoding individual letters.

The first question of whether the prereaders were able to learn to read the analogy test words was examined by seeing if the scores for analogy word reading differed significantly from 0 (recall children were initially screened for reading ability). The results of the dependent t-test analysis (2-tailed) indicated the analogy reading scores did differ significantly from 0, $t(14) = 2.13$, $p < .05$.

The second question of whether children had more success reading the analogy words than the letter-sound correspondence words was examined by subjecting the analogy and letter-sound reading scores to a dependent t-test analysis (2-tailed). The differences between the two types of reading failed to reach significance with the total sample, $t(14) = 1.73$, $p = .11$ or with the 5-year-olds analyzed separately, $t(7) = 2.20$, $p = .06$. However, the observed differences were in the hypothesized direction and would have been significant with a slightly larger sample (i.e., one more 5-year-old).

Table 3 shows the analogy and letter-sound word reading results. In all, children were able to read the analogy test words on 17 occasions compared to seven for the letter-sound test words. Children were clearly less successful at reading the letter-sound test words.

Table 3. Analogy and Letter-sound Word Reading

Test Word Type	Test Words				Total
Analogy	bed (4)	dug (0)	sin (0)	rug (3)	7
Analogy	rat (2)	bam (2)	pat (3)	man (3)	10
Letter-sound	bad (2)	bum (1)	pit (0)	rag (0)	3
Letter-sound	bet (1)	bag (1)	sit (1)	run (1)	4

All four children who read the analogy test words were 5-year-olds. Half of the 5-year-olds (n = 8) then, learned to read the analogy test words (mean = 4.25 words, maximum = 8 words) whereas none of the 4-year-olds read any analogy or letter-sound test words.

Prereading Group and Treatment Effects

To examine the effects of prereading skills group membership and treatment conditions on analogy reading, the analogy reading test scores were analyzed by crossing the two prereading skill groups (Low and High) with the three treatment conditions. The results of this 2 by 3 factorial design are presented in Table 4. This analysis should be viewed with caution due to the small sample size (n = 15).

Table 4. ANOVA Table for Analogy Test Word Reading

Source	SS	DF	MS	F	omega²	p
Prereading skills group	20.82	1	20.82	4.97	.36	.05
Treatment condition	.02	2	.01	.003	.00	.99
Prereading* treatment	.02	2	.01	.003	.00	.99
Error	37.67	9	4.19			

As shown in Table 4, there was a statistically significant difference on analogy word reading between the Low and High

prereading skill groups (none of the children in the low group read any analogy words), but not between the treatment conditions. The means and standard deviations for the Condition I, II, and III respectively were 1.4 (2.19), 1.25 (2.50), and .83 (2.04). Nor was the interaction between prereading skill group and treatment condition significant.

To examine the lack of a main effect due to treatment condition, two contingency tables are presented. In Table 5, the analogy word reading results are shown by treatment condition and by trials. As Table 5 shows, there were no clear differences in the number of analogy words read between treatment conditions.

Table 5. Analogy Words Read by the High Prereading Skills Group

Condition	Set 1	Set 2	Set 3	Set 4	Totals
I	2	1	2	2	7
II	2	1	1	1	5
III	0	1	2	2	5
Totals[a]	4	3	5	5	17

Note. n = 3 in Condition I, n = 2 in Conditions II and III.
[a]Maximum word reading per trial = 14.

However, analogy word reading increased over trials with one child in Condition III. It is impossible to make a strong case on the basis of one child but this data should not be discounted as it does provide evidence, however limited, that analogy word reading increased over trials in Condition III.

Another perspective on analogy word reading is provided by Table 6, which presents the number of subjects who read analogy test words. Note that all successful analogy word readers were 5-year-olds.

Table 6. Number of Subjects Reading Analogy Test Words

Condition	Set 1	Set 2	Set 3	Set 4
I	2	1	2	1
II	1	1	1	1
III	0	1	1	1
Totals	3	3	4	3

As with Table 5, there were no apparent differences in analogy word reading among treatment conditions. As well, the numbers of children reading analogy words did not appear to vary significantly over trials.

Discussion

The finding that prereaders were able to read the analogy test words after a few brief training sessions with rhyming words suggests that beginning readers are able to use orthographic analogy. For this argument to be convincing however, another condition had to be met; significantly more analogy test words would have to be read than letter-sound correspondence test words. The observed difference between reading analogy and letter-sound test words was in the hypothesized direction (more

analogy words read than letter-sound words) but failed to reach statistical significance.

Given a larger sample and a statistically significant difference between analogy and letter-sound word reading, such a finding would be evidence for the Goswami and Bryant (1990) view that children can use orthographic analogy when first beginning to read. Such evidence would also run counter to the position that children are able to use orthographic analogy only after considerable experience with alphabetic recoding at the phoneme level (Ehri, 1991, 1992b).

The finding that children in the high prereading skill group were the only ones to benefit from the training suggests there is a relationship between learning to read words using orthographic analogy and skills in rhyming, phoneme identity, and letter-sound knowledge. It also supports other research in analogical reasoning that children perform better on analogical tasks when they are familiar with the operations and objects introduced (Brown, 1989; Brown, Kane, & Long, 1988).

The treatment conditions used in the pilot study were based on the assumption that the segmented text used by Baron (e.g., 'b', 'at', 'bat', 'ed', 'red') implicitly provided phonological training in onset and rime and that this phonological training was a key element in the analogy test word reading that followed. However, no statistically significant differences on analogy word reading were found among treatment conditions. This suggests that the ability to read words by orthographic analogy was not enhanced by the phonological training in onset and rime

(Conditions II, III) beyond the whole word training without it (Condition I).

An important consideration is that there were only 15 children in the pilot study and the finding of no statistically significant differences among treatments was based only on the four children who read analogy words (2 subjects in Condition I, 1 subject in each of Conditions II and III). The following discussion must be considered in light of the small sample size.

Given the results of the pilot study, the use of the conditions which had phonological training in onset and rime (Conditions II, III) should be re-evaluated, and another condition be considered. There are three feasible interpretations.

First, the pilot findings could be accepted as being true (at least for brief periods of training) and the recommendation be made that the main study not include a condition which uses phonological training in onset and rime. Second, the pilot findings could be considered an insufficient test of the possible benefits of phonological training on the use of orthographic analogy due to the small sample size. A third alternative, given the pilot evidence for the use of orthographic analogy, is that using segmented text for training items would enhance the reading of analogy test words more than training with whole text, with or without phonological training with onset and rime.

The pilot study provided evidence that prereaders can use orthographic analogy to read after only brief training with words presented as whole text. The use of whole text precluded the

possibility that the children used segmented text to read the analogy words, the rival account Goswami and Bryant (1990) provided for the successful reading in Baron's study. The important question that remains is whether the use of segmented text in training items (i.e., Baron's training sets) will result in more analogy word reading than training with whole text.

In order to compare the effects of training with segmented text with that of whole words, and to re-examine the possible effects of phonological training with onset and rime, it is recommended that three treatment conditions be represented in the main study. One treatment condition would replicate pilot study Condition I and use whole text for training words but not have phonological training in onset and rime. A second condition would also use whole text but would include phonological training. The third condition would use segmented text for training items (i.e., Baron's training) and include phonological training. These three conditions implemented together will allow for an examination of whether the use of orthographic analogy is enhanced by phonological training and by training with segmented text over training with whole text alone.

The use of phonological training in the third treatment condition would be a departure from Baron's original training but it is recommended so that the central distinguishing feature between conditions two and three will be the use of segmented text. If phonological training is not included in condition three, then there will be two central differences between the conditions (phonological training *and* segmented text), making the

effects of segmented text unclear. The cost of adding phonological training to the third condition is that a comparison to Baron's (1977) study would not be exact.

Additional Analyses

The analyses up to this point have involved mainly group performances, and although they are sensitive tests of group differences, they do not permit an examination of whether or not particular phonological, letter-sound, and reading skills have been mastered by individual children. Analyses that examined these individual differences were conducted by other researchers (e.g., Bowey & Francis, 1991; Byrne & Fielding-Barnsley, 1990, 1991) by giving each child a pass or fail rating on each relevant prereading measure and then examining the relationship between success on prereading skill and subsequent word reading ability.

Following these researchers, children's performances were classified as High or Low on the three prereading skills of rhyme, phoneme identity, and letter-sound knowledge. Subjects were rated on each prereading skill by considering positive z scores to be High performance and negative z scores to be Low performance. The results of rating subjects on each prereading skill and their subsequent word reading are presented in Table 7.

As can be noted from Table 7, most of the analogy and letter-sound word reading was produced by children who were rated High in all three prereading skills. It is also notable that letter-sound knowledge, in combination with either rhyming or phoneme identity, was sufficient to produce some, albeit limited,

word reading as well. Interestingly, five subjects were rated High on rhyming skill alone but no subjects were rated High on either phoneme identity or letter-sound knowledge alone.

Table 7. Subject's Prereading Skills Rankings and Reading Scores

Prereading Skill Ranking	n	Reading Test Scores	
		Analogy	Letter-sound
High R, L, P	3	15	6
High R, L only	1	2	0
High L, P only	2	0	1
High R, P only	0	0	0
High R only	5	0	0
High L only	0	0	0
High P only	0	0	0
Low R, L, P	4	0	0

Note. R = rhyme, L = letter-sound knowledge, P = phoneme identity.

As previously mentioned, researchers noted during the pilot study that children in the Low prereading skills groups appeared to take many more trials to learn to read the training words to criterion (2 successive trials without error) than children in the High prereading skills group. The trials to criterion score, described by Yopp (1988) as a measure of the rate of reading acquisition, was used as the dependent variable to examine a prediction made by Goswami and Bryant (1990).

Goswami and Bryant (1990) predicted that rhyming makes an independent contribution to reading after accounting for the effects of other variables such as age, language ability (PPVT-R), phoneme identity, and letter-sound knowledge (see Table 2 for the correlations among the pretests and the trials to criterion scores).

For a stringent test of the hypothesis that rhyming ability contributes independently to reading, Bryant et al. (1990) recommend entering the relevant variables into a fixed-order multiple regression analysis with rhyming skill as the last variable entered. This analysis would show whether the children's rhyming scores predicted reading after the influences of the other variables were removed. The results of this analysis, shown in Table 8, must be viewed with caution due to the small sample size.

Table 8. Relation of Rhyme to Trials to Criterion After Controlling for Related Variables

Variable	Cumulative R^2	R^2 Change
Step 1. Age	.22 (.00)	.22 (.00)
Step 2. PPVT-R	.26 (.22)	.03 (.22)
Step 3. Phoneme identity	.33 (.48)	.08 (.26)
Step 4. Letter-sound knowledge	.34 (.48)	.01 (.00)
Step 5. Rhyming	.49 (.92)	.16 (.44)

Note. Results are reported for the total sample (n = 15) and for the 5-year-olds (n = 8) separately in parenthesis.

As shown in Table 8, rhyme accounts for 16% (44% with 5-year-olds) of the variance in the trials to criterion measure after differences age, language skills, phoneme identity, and letter-sound knowledge were accounted for. These results lend support to Goswami and Bryant's claim that rhyming makes an independent contribution to reading.

The data was also analyzed with all possible subsets regression (BMDP) where the best subset of independent variables or variable is selected on the basis of Mallow's C_p, the sample R^2, or the adjusted R^2. The best subset selected according to Mallow's C_p was rhyming ability alone. The best subset according to the R^2 values were rhyme combined with letter-sound knowledge (R^2 = .49) followed by rhyming combined with phoneme identity (R^2 = .48). These results also support the view that rhyming ability is significantly related to beginning reading.

A final additional analysis was performed on the phoneme identity scores and is based on the prediction that children will be able to identify more phonemes in the initial position of words than in medial or final positions. A positive finding would support the view that rhyming skill facilitates the identification of phonemes in the initial position (Goswami & Bryant, 1990). This is based on evidence that in CVC rhyming words, the onset is represented by a phoneme so that identifying initial phonemes should be easier than when the phoneme is in another position.

In the pilot study, identifying the initial phoneme was found to be much easier than identifying the medial or final

phonemes, $F(2, 12) = 6.97$, $p < .01$). This finding is in line with previous research (Kirtley et al., 1989).

Recommendations

The pilot study was instructive in many regards and there are several improvements which are recommended for the main study. First, 5-year-olds are the preferred age group for the main study. Seven of the subjects in the pilot study were 4-year-olds and most of these children had difficulty learning the training words and none were able to read any analogy or letter-sound test words. As well, four of the 4-year-olds knew no letter-sounds, which created a bimodal distribution for that variable.

Most importantly, half of the 5-year-olds (4 out of the 8) benefited from the training and were able to read the analogy and/or letter-sound test words. The central question examined in the study is whether prereaders can use orthographic analogy when beginning to read and based on the pilot study, many 5-year-olds appear to have the prerequisite skills.

The use of orthographic analogy is inferred on the basis of successful reading of the analogy test words and fewer readings of the letter-sound test words. Several children in the pilot study revealed the strategy they used to read the test words by orally segmenting words and by pointing with their fingers. It is recommended that children who read words correctly be asked for the strategy they used to pronounce the test words. This

information would be useful in determining the strategy they used for reading.

There are five changes recommended for the treatment conditions used in the pilot study. First, many children were confused by the initial letters in the training and test words for set 2. Two training words began with the letters 'b' or 'd' and all four test words begin with 'b' or 'd'. The recommended change is to replace the initial 'd's with 'h's to eliminate this confusion. The training word 'dam' becomes 'ham' and the test word 'dug' changes to 'hug'. In addition, several children in the pilot study appeared surprised and when the researchers named the test word 'bum'. 'Bum' will be changed to 'hum'.

Second, it is recommended that the illustrations not be used to accompany the training words. The illustrations focused attention away from the text and seemed to encourage the use of the strategy of memorizing the order of the words without paying attention to the text.

Third, to preclude the use of memorizing the word order in the trials to criterion task, and to balance the order of reading test items, the main study should use the Latin squares method of balancing, a) the order of training set presentation across subjects, and b) the order of test word presentation within sets. The pilot study randomized a) but not b).

Fourth, Condition II should be dropped so that only one condition which provided onset-rime training with whole words would be retained for the main study. Condition III is preferred

over Condition II because the phonological training is more explicit.

Finally, it is recommended that a treatment condition be added that follows Baron (1977) and contains segmented text and onset-rime training.

The three recommended treatment conditions would be as follows. One condition would be limited to training with whole word text and without phonological training in onset and rime (spontaneous analogy condition, SA). A second condition would train children to read whole word text and have onset-rime training (phonological condition, PH). The third condition would train children to read segmented text and include onset-rime training (orthographic segmentation condition, OS). These treatment conditions build upon the pilot evidence that children may learn to use orthographic analogy when beginning reading and add examinations of the effects of phonological training and training with segmented text.

Rating each prereading skill high or low on the basis of z scores and then examining the relationship between prereading skill and word reading permits an examination of whether particular skills had been mastered by individual children (see Table 7). It is recommended that this analysis also be used in the main study.

The analysis of the relationship among the pretests and the trials to criterion measure was an effective method to determine if rhyming ability made an independent contribution to reading acquisition (see Table 8). If the trials to criterion measure is

normally distributed, it is recommended that this analysis be retained for the main study.

To summarize, the recommendations for the main study are as follows:

1. The sample should consist of prereaders who are at least five years old.

2. Children who read test words correctly should be questioned about the strategy used.

3. Items for set 2 should be altered to avoid confusion between the initial letters 'b' and 'd'.

4. The training should not include illustrations.

5. The order of training sets and reading test word presentation should be balanced by the Latin square method.

6. Conditions I and III should be retained but Condition II should be dropped.

7. A condition should be added that uses segmented text following Baron (1977).

8. Analyzing the mastery of particular skills by individual children should be added.

9. The relationships between the prereading skills and learning to read should be studied using the number of trials to criterion as the dependent measure.

Main Study

Hypotheses

The hypotheses for the main study are similar to those in the pilot study but also incorporate the pilot recommendations.

1. Prereaders will learn to read more words on the basis of orthographic analogy than by letter-sound correspondences. If prereaders can read more analogy test words than letter-sound correspondence test words, this hypothesis is supported. A positive finding would provide evidence for the view that beginning readers can use orthographic analogy to begin reading (Goswami & Bryant, 1990, 1992) but not the position that considerable experience with alphabetic recoding at the phoneme level is a prerequisite (Ehri, 1991, 1992a).

2. The ability of prereaders to learn to read words by orthographic analogy will be differentially enhanced by different training conditions.

a) Phonological training in onset and rime in addition to training using whole word text (PH condition) will enhance the ability to read words by orthographic analogy more than training using whole word text alone (spontaneous analogy condition, SA).

b) Phonological training in onset and rime using segmented text (OS condition) will enhance the ability to read words by orthographic analogy more than phonological training in onset and rime using whole word text (PH condition).

c) Phonological training in onset and rime using segmented text (OS condition) will enhance the ability to read words by

orthographic analogy more than training with whole word text (SA condition).

Comparisons of the training conditions will provide evidence for the relative contribution of phonological and segmented orthography training to reading by orthographic analogy. This was not possible in Baron's (1977) study where effects of phonological training in onset and rime, and training using segmented text were conflated.

3. The ability of prereaders to learn to read words by orthographic analogy will vary according to their level of prereading skills. Specifically, children in the High prereading skills group will read more analogy reading test words than children in the Low prereading group. A positive finding would be evidence that one or more of the prereading skills of rhyming, phoneme identity, and letter-sound knowledge were related to reading words by orthographic analogy. It would also add to the existing evidence in the analogical reasoning literature that young children perform significantly better on analogical tasks when they are familiar with the operations and objects introduced (Brown, 1989; Brown, Kane, & Long, 1988).

4. Rhyming ability of prereaders will make an independent contribution in learning to read after accounting for the effects of age, vocabulary (PPVT-R), phoneme identity, treatment group membership, and letter-sound knowledge.

A positive finding would support the position taken by Goswami and Bryant (1990) that rhyming makes an independent contribution to beginning reading.

Subjects

The children were solicited from six kindergarten classrooms in the city of Kamloops, British Columbia, Canada. One participating school was selected because of its proximity to the university and the three other schools were selected by the Superintendent of the school district because of the large numbers of kindergarten children in attendance. The six classrooms were taught by four different teachers (two teachers taught separate morning and afternoon classrooms), all of whom cheerfully agreed to participate in the study.

The teachers sent notices home with 88 children to request the consent of the parent or guardian to have their child participate in the study. All 74 of the children who were given consent were selected to participate in the study (return rate of 84%). From the original sample, two children moved during the course of the study, three were screened for reading ability, and three were dropped because they declined twice consecutively to continue the training. The children who declined did not seem to find the training unpleasant but rather appeared to find other kindergarten activities, especially the sand box, more attractive. The final sample consisted of 66 children.

Based on pre-study information from kindergarten teachers, the children had no known language impairments and had English as a first language. The average age of the 66 children (35 girls and 31 boys) was 5 years 8 months (SD = 4.15, range = 5 years 1 month - 6 years 5 months).

Following Bryant et al. (1990), the social background of the children was estimated using information collected from parents (see Table 9). The national percentages are from 1986 census data.

Table 9. Children's Background Measured by Father's Occupation and Mother's Education

Measure	Percentage National	Percentage Group's	n
Father's Occupation			
Professional	10	15	6
Intermediate manager	13	12	5
Technical	22	12	5
Manual skilled	31	40	16
Manual partly skilled or unskilled	23	18	7
Unemployed		2	1
Mother's Education			
University	8	40	16
Vocational/technical	32	37	15
High school	42	13	5
No qualifications	18	10	4

Note. The years of study at each level was requested for mother's education.

The father's occupation and the mother's education, was requested from the parents. Of the 66 children in the study, 40 families returned the self-addressed and stamped envelopes containing this information (return rate of 61%). The original

intention was to include the mother's education in some analyses (hypothesis 4) but the low return rate eliminated this possibility. The social background data on the 38 respondents is presented in Table 9.

Caution must be observed when estimating the social background information collected is used to determine the generalizability of the findings as information was not received on 28 of the children. However, Table 9 suggests that professional occupations are overrepresented in the sample and intermediate managerial and technical occupations are underrepresented. Mothers who have attended university are hugely over represented in the sample as are mothers with vocational or technical training. High school graduates and mothers with no qualifications are very much underrepresented in the sample. Again, these estimates of the social background must be viewed with caution as there were 28 families who did not return the questionnaires on social background.

Design

The study used an experimental design with three treatment conditions; spontaneous analogy (SA), phonological training in onset-rime (PH), and orthographic segmentation (OS) training. Two prereading skills groups (Low and High) based on the pretest scores of rhyming, phoneme identity, and letter-sound knowledge, were crossed with the three treatment conditions. This produced a 2 by 3 (2 prereading skills groups by 3 treatment conditions) factorial design.

Rhyming ability, phoneme-identity, letter-sound knowledge, age and PPVT-R served as independent variables. The three dependent variables in the study were the average number of trials to criterion taken to learn to read the words in the training sets, reading orthographic analogy test words, and reading letter-sound correspondence test words.

Procedure

The researcher visited the children at the participating schools before beginning any testing or training. A trained assistant who followed the same procedure was hired to collect the data in one of the six classrooms. The decision to begin working with the children was based on the recommendation of the participating kindergarten teachers. All testing and training was carried out in rooms adjacent to or inside the classroom.

The children were initially screened for reading ability with eight words selected from Baron's (1977) reading test (bed, pit, bet, sin, hug, man, bag, rag). Children able to read more than one word were screened from the study. Three children who read only one word were included. Sixty-three of the children were unable to read any of the screening test words, in spite of encouragement. Most children commented that they could not read and several named individual letters in test words but were unable to read the word. The finding that only three children were readers was consistent with related research indicating that few children this age can read (Bryant et al., 1990; Byrne & Fielding-Barnsley, 1991), as well as with the pilot study data.

Children were then given the Peabody Picture Vocabulary Test (PPVT-R) to estimate their receptive language and vocabulary skills. No child scored lower than one standard deviation below the standardized mean of 100 (sample standardized mean = 103.6, SD = 11.2).

In the second session, children were tested for the three prereading skills of rhyming, phoneme identity, and letter-sound knowledge. Stratified random assignment based on these pretest scores was used to assign children to Low or High prereading skills groups. The pretest scores were converted to z scores and then summed for each subject. Subjects were placed into High or Low prereading skill groups based on the sign of the summed z scores. Children with negative z scores were assigned to the Low prereading skills group and children with positive z scores were assigned to the High group. Children were then randomly assigned from within prereading skills groups to one of the three treatment conditions, spontaneous analogy (SA), phonological training (PH), or orthographic segmentation (OS). The pilot data provided empirical support for splitting the group according to levels of prereading skill, as only children in the High group were able to read any test words. Results from the main study provided further support for splitting the group in this manner, as prereading skills group membership proved to be an excellent predictor of test word reading.

As in the pilot study, the training consisted of teaching the training items and then, following each training set, testing the children for analogy and letter-sound correspondence word

reading. The training sessions lasted less than 20 minutes each, with one or two training sets taught per session.

A primary emphasis of the training was to make the sessions enjoyable for the children and they only took place when the children were amenable. Puppets were introduced during the training to assist in making the training more enjoyable.

The order of training set and reading test word presentation were balanced within groups using the Latin square method following Ott (1984). Children who began training with set 1 were tested for reading with the first reading test word ('bed'). Children who began training with set 2 were tested for reading with the second reading test word ('bam'), and so on.

Following the recommendations from the pilot study, the orthographic segmentation (OS) condition was like Baron's (1977) training but with two minor changes (see Figure 6).

Training Sets	1	2	3	4
	b	h	s	r
	at	ug	in	ug
	bat	bug	pin	mug
	ed	am	at	an
	red	ham	sat	ran
Reading Test Sets				
Type 1. Analogy	bed	hug	sin	rug
Analogy	rat	bam	pat	man
Type 2. Letter-sound	bad	hum	pit	rag
Letter-sound	bet	bag	sit	run

Figure 6. Training and reading test sets for the OS condition.

First, words starting with the letter 'd' in set 2 were altered to avoid the confusion children in the pilot study found between the seven items beginning with 'd' or 'b' in that set. Second, children were given phonological training in onset and rime, the training which could have been implicitly taught by learning the segmented text in Baron's (1977) study. The reading test words were identical for all treatment conditions.

The phonological condition (PH) followed the same procedure as the OS condition but used whole words in the training, not segmented text (see Figure 7). The use of whole words precluded Goswami and Bryant's (1990) caution of Baron's (1977) results. The phonological training (PH) also explicitly taught segmentation and blending of onsets and rimes (e.g., "bat", "b-at", "bat").

Training Sets		1	2	3	4
		bat	bug	pin	mug
		mat	mug	tin	bug
		red	ham	sat	ran
		ted	ram	mat	pan
Reading Test Sets					
Type 1	Analogy	bed	hug	sin	rug
	Analogy	rat	bam	pat	man
Type 2.	Letter-sound	bad	hum	pit	rag
	Letter-sound	bet	bag	sit	run

Figure 7. Training and reading test sets for the SA and PH conditions.

The spontaneous analogy (SA) condition was like the phonological (PH) condition but did not include phonological

training or explanations for incorrect responses to reading test words. The spontaneous analogy condition (SA) consisted solely of teaching prereaders to read two pairs of rhyming words. Thus it is a stringent condition for the use of orthographic analogy.

Children who were able to read test words in all treatment conditions were asked to explain how they arrived at the correct pronunciation. This information was gathered to help determine the strategy the children used to read the test words correctly.

Spontaneous Analogy (SA) Condition

The SA training was similar to Condition I in the pilot study but for two minor changes. First, illustrations were not used so the training words were presented as text alone. Second, the order of training set and reading test word presentation were balanced using the Latin square method.

Briefly, children in the SA condition were introduced to the puppets and then presented with the four training words in the set. They received two practice trials where the researcher named each word. The number of trials the child took to read the four training words to a criterion of two consecutive trials without error (to a maximum of 12 trials) was recorded. This formed the score for the trials to criterion reading measure. As in the pilot study, the relationship between the number of trials taken and the criterion score were inverted so that fewer trials were represented by higher scores. Children were asked to read the analogy and letter-sound correspondence reading test words immediately following the trials to criterion.

Following Baron (1977), corrective feedback was given after each incorrect response during the reading test. Unlike Baron, the corrective feedback for the SA condition consisted only of giving the correct reading of the word responded to incorrectly. No explanation was provided.

Phonological Training (PH) Condition

The PH training condition was the same as the SA condition except for two additions. First, the trials to criterion was followed by phonological training with onset and rime. Second, following Baron, corrective feedback consisted of naming incorrectly read words *and* providing an explanation.

Following the trials to criterion, children were invited to play a game with sounds and were told that the puppet can say the training words so that they have two sounds. One puppet (operated by the researcher) pointed to the letter representing the onset of the training word and said the sound (e.g., "b"). The other puppet (operated by the child) was asked to imitate the researcher. The researcher then pointed to the rime of the word, said the sound (e.g., "-at"), and then asked the child to repeat the sound. This process was followed to teach onset-rime blending (e.g., "b-at", "bat) and was repeated twice for each pair of rhyming words. The analogy and letter-sound correspondence reading test words, balanced by Latin squares, were presented following the phonological training.

The second feature added to the PH training from the SA training was that the corrective feedback provided after an

incorrect reading of a test word included an explanation. The explanation consisted of pointing out the similarities between the test word and the training words. Following the explanation provided by Baron (1977), the sounds of individual letters or spelling sequences within words were not given. The explanation consisted only of pointing out common letters and rime sequences between the test and training words.

In summary, the PH treatment condition is like the SA treatment condition but includes phonological training and provides for an explanation after incorrect readings of a test word. The main difference between the PH and orthographic segmentation (OS) condition is that the OS condition uses segmented text in training items.

Orthographic Segmentation (OS) Condition

The OS training condition followed the same procedures as the PH training. The only difference between the two conditions was in the stimulus items used during training, as the training items for the OS condition contained segmented text.

Briefly, children were taught to read the training set items by repetitions with corrective feedback to a criterion of two successive trials without error (to a maximum of 12 trials). As in the PH condition, the children received phonological training in onset and rime on the whole words in the training set. Finally, the children were asked to read the analogy and letter-sound reading test words. The feedback for incorrectly reading test words consisted of naming the word correctly, and pointing

out similarities between test words and training items (without providing sounds), as in the PH condition.

V. RESULTS

Pretest Measures

The children were given the PPVT-R in the first session and then tested for rhyming ability, phoneme identity, and letter-sound knowledge in the second session. Assignment to prereading groups was based on the summed z scores for rhyming ability, phoneme identity, and letter-sound knowledge. Children were then randomly assigned from within each stratified prereading skills group to one of the three treatment conditions. The results of the pretests for the 66 children in the study are presented in Tables 10, 11, and 12.

Table 10. Pretest Scores for Prereading Skills Groups

	PREREADING SKILLS		
	Low	High	Total
Measure	Mean(SD)	Mean(SD)	Mean(SD)
Age[a]	67.15(4.21)	69.03(3.93)	68.09(4.15)
PPVT-R[b]	101.21(13.42)	106.06(10.26)	103.60(11.20)
Rhyme	5.70(2.14)	8.06(1.17)	6.88(2.09)
Phoneme identity	2.39(2.12)	9.00(3.54)	5.70(4.41)
Letter-sound knowledge	4.70(4.08)	16.49(6.02)	10.59(7.83)

[a]Age is given in months.
[b]PPVT-R scores are standardized.

All pretest measures appeared to be normally distributed with the exception that phoneme identity was positively skewed. Ten of the 66 children were unable to identify any phonemes. Two-tailed independent t-tests found that the prereading skills groups differed significantly on rhyme, $t(64) = 5.56$, $p < .001$, on phoneme identity $t(64) = 9.21$, $p < .001$, letter-sound knowledge, $t(64) = 9.32$, $p < .001$, and on the PPVT-R, $t(64) = 2.50$, $p < .05$. Surprisingly, the prereading skills groups did not differ significantly on age, $t(64) = 1.88$, $p > .05$, the sole direct measure of maturation.

Table 11 presents the pretest scores for the three treatment conditions.

Table 11. Pretest Scores for the Three Treatment Conditions

	TREATMENT CONDITION		
	SA	PH	OS
Measure	Mean(SD)	Mean(SD)	Mean(SD)
Age[a]	69.05(4.08)	67.82(4.07)	67.41(4.31)
PPVT-R[b]	102.59(13.54)	101.73(10.03)	106.59(12.80)
Rhyme	7.14(2.15)	6.73(2.00)	6.77(2.18)
Phoneme identity	5.14(4.34)	5.50(4.44)	6.45(4.55)
Letter-sound knowledge	16.68(8.54)	10.41(7.42)	10.68(7.58)

[a]Age is given in months.
[b]PPVT-R scores are standardized.

Children were randomly assigned to treatment conditions using a random number table and as expected, the pretest means and standard deviations for the three treatment conditions were similar.

Table 12 presents the pretest scores for the six treatment groups.

Table 12. Pretest Scores for the Six Treatment Groups

	PREREADING SKILLS					
	Low			High		
Treatment Condition	SA	PH	OS	SA	PH	OS
Measure	Mean SD	Mean SD	Mean SD	Mean SD	Mean SD	Mean SD
Age[a]	68.00 4.20	67.36 4.65	66.09 3.91	70.09 3.86	68.27 3.55	68.73 4.45
PPVT-R[b]	100.73 10.77	98.59 10.08	104.36 14.36	104.46 10.46	104.91 9.35	108.82 11.28
Rhyme	6.27 2.37	5.36 1.92	5.46 2.21	8.00 1.55	8.09 .83	8.09 1.14
Phoneme identity	1.91 1.92	2.36 2.34	2.91 2.17	8.36 3.59	8.64 3.78	10.00 3.47
Letter-sound knowledge	3.00 2.41	5.09 3.89	6.00 5.22	18.36 4.18	15.73 6.18	15.36 7.37

[a]Age is given in months.
[b]PPVT-R scores are standardized.

Table 13 shows the correlations among the pretest scores, identity the trials to criterion measure, and analogy word

reading. The letter-sound reading test scores were not included because of apparent violations of normality.

Table 13. Correlations Among Pretests, Trials to Criterion, and Analogy Word Reading

Measure	1	2	3	4	5	6	7
1. Rhyme	-						
2. Letter-sound	.42***	-					
3. Phoneme identity	.57***	.70***	-				
4. PPVT-R[a]	.38**	.33**	.35**	-			
5. Age	.23	.25	.34**	.49***	-		
6. Criterion Average	.63***	.50***	.58***	.31*	.20	-	
7. Analogy Reading	.42***	.61***	.76***	.24	.22	.51***	_

Note. These correlations are descriptive not inferential. Based on a Bonferroni correction, r critical = .36, $p < .05$.
[a]PPVT-R are raw scores.
*$p < .05$. **$p < .01$. ***$p < .001$.

The trials to criterion was the number of times taken by the child to learn to read the training sets, with corrective feedback. As in the pilot, the criterion scores were inverted so fewer trials are represented by higher scores.

The prereading skills were highly and significantly interrelated. Age was the notable exception, but for the moderate relationship between age and the PPVT-R scores. Also

notable is the strong relationship between the three variables used to classify the subjects according to High or Low prereading skills groups (rhyming ability, letter-sound knowledge, and phoneme identity) and both the trials to criterion and analogy word reading measures.

The reliabilities of the prereading skills tests were calculated using Cronbach's alpha. The reliability estimates were .73 for rhyming ability, .91 for phoneme identity (.84, .87, and .88 respectively for identifying phonemes in the initial, medial, and final positions), and .84 for letter-sound knowledge. These estimates were consistent with previous research (e.g., Bryant et al., 1990; Yopp, 1988) and were sufficiently high to suggest the prereading skills tests were measured reliably.

The reliabilities of the reading measures were .93 for trials to criterion, .86 for analogy word reading, and .71 for letter-sound correspondence word reading.

Data Analysis

Data Screening

Pedhazur (1982) and others (e.g., Shavelson, 1988) recommend screening the data for extreme residuals, as extreme residuals may seriously distort the results. Extreme residual are defined by Pedhazur (1982) as standardized residuals greater than 2.00 (i.e., $z > 2.00$).

The three dependent variables for the hypotheses to be tested, the trials to criterion, analogy word reading, and letter-sound word reading, were all screened for extreme

residuals. Three children had scores that were detected as extreme residuals on six occasions, two occasions per child. The results of the screening for extreme residuals is presented in Table 14.

Table 14. Screening for Extreme Residuals in Dependent Variables

Outlier	Group Membership	Criterion Average	Analogy Reading	Letter-sound Reading
1	SA - High[a]		2.24	4.75
2	PH - High		2.35	2.05
3	OS - High	2.16	-2.10	

[a]High prereading skills group.

Two of these children (outliers 1 and 2 in Table 14) may have been readers who were failed to be screened from the study for reading ability, as both read near the maximum number of analogy and letter-sound correspondence reading test words. One was a boy and the other a girl.

The third child was in the High orthographic segmentation condition (OS) and was the only member of that group who failed to read any analogy reading test words. This child was shy and appeared to reluctant to make a response unless she was confident of the answer. She took the maximum number of trials to learn the training sets, perhaps for the same reason, and was detected as an outlier for the trials to criterion measure as well.

The hypotheses that used analogy word reading or trials to criterion as dependent variables were first analyzed with the outliers included and then again with the outliers deleted. All findings that were statistically significant at $p < .05$ remained so in both sets of analyses and in fact the mean differences increased with the outliers deleted. As well, all findings that were not significant remained so after the outliers were dropped.

Pedhazur (1984) recommends that extreme scores be corrected or deleted if they cannot be corrected because they may seriously distort the results. The scores in question were not data entry errors and could not be corrected. Rather than deleting the scores, a more conservative procedure is to retain outliers but to assign them the value of the subject one less than the next subject closer to the mean. The analogy word reading scores for outliers 1 and 2 were reduced to 5 from original scores of 7 and 8. The score of the third outlier was increased to 2 from 0. The effects on the means and standard deviations of the affected groups for analogy word reading are presented in Table 15.

Table 15. Effects of Adjusting Outliers on Analogy Word Reading

	Outliers Included		Outliers Adjusted		Difference	
Group	Mean	SD	Mean	SD	Mean	SD
SA High	2.55	(2.58)	2.36	(2.29)	-.19	(-.29)
PH High	2.82	(2.75)	2.55	(2.30)	-.27	(-.45)
OS High	4.73	(2.49)	4.91	(2.16)	+.18	(-.33)

Note. There was one outlier in each condition.

Adjusting the analogy word reading scores of the three outliers in the manner described increases the total variance accounted for by the model (2 prereading skills groups by 3 treatment conditions) from 43% to 50% and decreases the mean square error from 4.00 to 3.13. These differences, according to Pedhazur (1984), would be conservative estimates of the amount of distortion generated by the extreme outliers. These improvements in the fit of the model combined with the lack of change in the statistical significance of the results led to the decision to adjust the scores of the outliers in the manner described. The data analyses reported that use analogy word reading as the dependent measure are with the scores of the three outliers adjusted.

Adjusting the trials to criterion score for the one outlier (increased to 5.75 from 0) increased the mean for that group (orthographic segmentation condition, High prereading skills) from 6.84 to 7.36 and decreased the standard deviation from 2.01 to 1.83. The analyses reported that used trials to criterion as the dependent measure were calculated with the score of the one outlier adjusted. Adjusting the letter-sound correspondence reading scores for the two outliers (both scores of 5 were rescored as 3) reduced the mean from .57 to .53 and the standard deviation from 1.36 to 1.19.

Data screening revealed that both the analogy and letter-sound word reading test scores were positively skewed (skewness = 1.06 and 2.44 respectively). Thirty-three children were unable to read any analogy reading test words and 49 children were

unable to read any letter-sound correspondence test words. This suggested that the population normality assumption of the t-test for these analyses was violated.

In spite of evidence that t-tests are robust for violations of normality and homogeneity of variances given equal sample sizes (Glass & Hopkins, 1984), all t-tests that had either analogy or letter-sound correspondence word reading were re-analyzed using transformed scores to adjust for positive skewness. Following Tabachnick and Fidell (1989), three separate transformations were used to adjust both word reading test scores. The three transformations used the following formulae:

1. X = Square root (X).
2. X = Log (X + 1)/Log (10).
3. X = 1/(X + 1).

The t-test for hypothesis 1 was re-analyzed following each transformation and in all cases the differences remained statistically significant at $p < .05$. As a result, the t-test reported for hypothesis 1 was calculated with the original data.

Hypothesis 1

Prereaders will learn to read more words on the basis of orthographic analogy than by letter-sound correspondences.

Thirty-three children were able to read the analogy reading test words on 124 occasions (mean = 1.83, SD = 2.40) whereas only 17 children were able to read the letter-sound correspondence test words on 35 occasions (mean = .53, SD = 1.19). A 1-tailed dependent t-test found that the difference between these means

was statistically significant, $t(65) = 5.74$, $p < .001$. This finding was evidence that the prereaders used orthographic analogy to read the analogy test words and that reading by letter-sound correspondence was much more difficult. Table 16 shows the number of analogy and letter-sound reading test words read correctly.

Table 16. Occasions Analogy and Letter-sound Test Words Read Correctly

Word Type	Test Words				Totals
Analogy	bed (18)	hug (13)	sin (13)	rug (12)	56
Analogy	rat (15)	bam (15)	pat (19)	man (19)	68
Letter-sound	bad (7)	hum (4)	pit (2)	rag (2)	15
Letter-sound	bet (3)	bag (4)	sit (7)	run (6)	20

Note. The number of occasions the word was read correctly are in parenthesis.

The analogy word reading scores ranged from 12 to 19 and to determine if these differences were significant, the analogy test words were coded and the means were compared. There were a possible 528 occasions for these words (8 words by 66 subjects) An ANOVA of mean correct readings per analogy test word revealed that the differences among words for correct readings was not statistically significant, $F(7, 520) = .67$, $p > .05$, $MS_e = .18$.

Children were asked to explain how they read the test word following each successful reading. Many children did not provide

explanations that described their strategy (e.g., "I just read it", "I don't know", "I can read now") whereas several children gave clear explanations. The most common explanation, given by 15 children, was that the test word rhymed with a training word. This was additional evidence that the analogy children made was based on rhyming ability.

Testing Rival Explanations

Four rival explanations to the use of orthographic analogy that could possibly account for the significant difference between analogy and letter-sound test word reading were examined. They will be discussed in order.

First, the argument could be made that the majority of the analogy test word reading was accomplished by children in the orthographic segmentation condition, and if Goswami and Bryant's critique is true then the reading could have occurred without the use of analogy. If this is true, then the prediction would be that children in the spontaneous analogy (SA) treatment condition would not have read more analogy than letter-sound reading test words. A 1-tailed dependent t-test that compared the analogy and letter-sound reading scores for the SA condition found that the significant difference remained, $t(21) = 2.81$, $p < .01$. The first rival explanation was not supported.

Second, the analogy reading test words were the first to be presented to children who began with training sets 1 or 2 while children beginning sets 3 and 4 were tested first with letter-sound words. Balancing the set and word reading presentation

order had this effect. The analogy test words rhymed with one of the training words and children beginning with training sets 1 and 2 may have simply guessed a rhyming word correctly for the test word without the use of text, or even looking at the test word. Children who began the training with sets 3 or 4 would not be rewarded for this strategy, at least not immediately. If this guessing strategy was used by children who were presented with training sets 1 and 2 first, a significant effect for the order of training set presentation is predicted, with children beginning with training sets 1 and 2 scoring higher on analogy word reading. Also, it is more likely that the analogy reading test words in training sets 1 and 2 would be read more often than in sets 3 and 4 where the letter-sound test words are presented first. The order of presentation of the training sets was not significant, $F(3, 62) = .15$, $p > .05$, $MS_e = 6.00$. There were no significant differences among the means for the number of times each analogy test word was read, $F(7, 520) = .67$, $p > .05$, $MS_e = .18$. The explanation that significant analogy word reading was accomplished by systematic guessing by children beginning with training sets 1 and 2 was not supported.

Another possible guessing strategy which could be viewed as a rival hypothesis to explain significantly more analogy than letter-sound word reading is that the children guessed a word that rhymed with a training word on every occasion a test word was presented. This explanation predicts that there would be no significant differences in analogy word reading between the Low and High prereading skills groups or among the three treatment

conditions. Later analyses will provide evidence that there indeed were significant differences on analogy reading test scores between the Low and High prereading skills groups as well as between two treatment conditions. The rival explanation that children constantly guessed a rhyming word for analogy reading test words was not supported.

The final rival explanation examined was tested and rejected by Baron (1977) but will be reconsidered here. It was possible to read an analogy reading test word correctly after sounding out two parts accurately (the initial letter and the last two as one, representing the rime). In order to correctly read a letter-sound test word, however, it was necessary to make three sounds accurately, one for each letter. If the same number of word parts were read correctly for both the analogy and letter-sound reading test words, the result would be significantly more analogy word reading.

This possibility can be tested by counting the number of parts of analogy and letter-sound test words read correctly. If this explanation is true, there would be no difference in the number of parts of analogy and letter-sound test words read correctly, or more letter-sound test words parts would have been read correctly. This is a stringent test because the last two sounds of the analogy test word both had to be correct to count as a single correct part, and because the maximum number of correct parts would be two for each analogy test word but three for each letter-sound test word. In spite of this lower ceiling for the analogy test words, a 2-tailed dependent t-test found

that there were more parts of these words read correctly than of the letter-sound test words, $t(65) = 2.77$, $p < .01$. The explanation that fewer number of letter-sound test words were read correctly because they required the correct reading of more word parts than analogy words was not supported.

There were two ways to examine the effects of treatment conditions on word reading while controlling for prereading skills. One alternative was to split the sample according to levels of prereading skills, as in the pilot study. This procedure would follow previous research that categorized prereaders as pass/fail on prereading skills and then examined reading within these groups (e.g., Bowey & Francis, 1991; Byrne & Fielding-Barnsley, 1990, 1991). Also, the pilot study provided evidence that prereaders' ability to learn to read analogy test words was bimodaly rather than normally distributed. The main disadvantage of this procedure was that variance within treatment conditions would be reduced.

The second alternative was to use the prereading skills as covariates and retain the variance on analogy word reading within treatment conditions. Prereading skills would be analyzed as continuous variables but analogy word reading could not be examined under different levels of prereading skills.

To provide for the most complete examination, both analyses were conducted and as expected they were consistent. The analyses that split the sample according to the level of prereading skills are presented first.

Planned Orthogonal Contrasts

The method of planned orthogonal contrasts (POC) was used to examine hypotheses 2a, 2b, 2c, and 3. The POC method was selected because it is considered to be the most powerful test of mean differences (Glass & Hopkins, 1984, Shavelson, 1988). This increased power comes at the price of two constraints. First, hypotheses about differences among specific means must be set forth prior to the data collection and this condition was met. Second, the contrasts must be orthogonal. In the POC method, all the sums of squares between groups is decomposed into J - 1 orthogonal parts, each part associated with a contrast. The condition of orthogonal contrasts was also met. As there were six groups in the study (2 prereading skills groups by 3 treatment conditions), there were five possible orthogonal contrasts. The POC matrix used to test hypotheses 2a, 2b, 2c, and 3 along with the results are presented in Table 17.

POC uses a contrast-wise Type I error rate so that the error rate increases with each contrast. To control for this it is recommended that the specified Type I error rate be divided by the number of contrasts made (Shavelson, 1988). As five contrasts were made in the study (see Table 17), the Type I error rate was set at $p < \alpha/5$, $p < .01$.

Briefly, the first four contrasts made comparisons among the three treatment conditions and were designed to estimate the effects of phonological training and the use of segmented text on analogy word reading. The hypothesis 2a contrast compared the analogy word reading means of the spontaneous analogy (SA) and

phonological training (PH) treatment groups. Contrast 2b compared the analogy word reading means of the phonological training (PH) and the orthographic segmentation (OS) conditions. The 2c contrasts compared the spontaneous analogy (SA) and orthographic segmentation (OS) means.

Table 17. Planned Orthogonal Contrast Matrix for Analogy Word Reading

	PREREADING SKILLS						
	Low			High			
Treatment Condition	SA	PH	OS	SA	PH	OS	
Mean	.18	.09	.91	2.36	2.55	4.91	
SD	.41	.30	1.81	2.29	2.30	2.17	
Hypotheses							t
2a	0	0	0	1	-1	0	.08 ns
2b	0	0	0	0	1	-1	2.98**
2c	0	0	0	1	0	-1	3.06**
2c	1	0	-1	0	0	0	.97 ns
3	1	1	1	-1	-1	-1	6.61***

Note. t-tests were independent 1-tailed, $MS_e = 3.13$.
**$p < .01$. ***$p < .001$. ns = not significant.

Contrast 3 compared the mean of the Low prereading skills group with the mean of the High prereading skills group. It examined the possible effects of High or Low prereading skills on analogy word reading, regardless of treatment condition.

Hypothesis 2a

Phonological training in onset and rime in addition to training using whole word text (PH condition) will enhance the ability to read words by orthographic analogy more than training using whole word text alone (spontaneous analogy condition, SA).

This hypothesis examines whether phonological rhyme-based training contributes to analogy word reading over the limited training of simply learning to read two rhyming pairs of words. The contrast was made only with the High prereading skills groups. The mean of analogy word reading by the spontaneous analogy (SA) group was 2.36 (SD = 2.29) while the mean for the phonological training (PH) group was 2.55 (SD = 2.30). The 1-tailed independent t-test found that the difference between these means was not statistically significant, $t(20) = .08$, $p > .05$. This was evidence that phonological training did not benefit analogy word reading over training in whole words alone, in spite of the extra time children in the PH condition experienced with the training words.

Also, the explanation children in the PH group received following an incorrect reading of a test word (similarities in text between the test and training words were pointed out) did not increase analogy word reading.

This was not a stringent test of the hypothesis because the phonological training was very limited (approximately 10 minutes in total).

Hypothesis 2b

Phonological training in onset and rime using segmented text (OS condition) will enhance the ability to read words by orthographic analogy more than phonological training in onset and rime using whole word text (PH condition).

This contrast was made with the High prereading skills groups only. The mean number of analogy words read by the orthographic segmentation (OS) group was 4.91 (SD = 2.17) while the mean for the phonological training condition (PH) was 2.55 (SD = 2.30). Ten of the 11 children in the High prereading skills OS group read two or more analogy reading test words but only 7 of the 11 children in the High prereading skills PH group accomplished this task. An independent 1-tailed t-test found that the difference between the means was statistically significant, $t(20) = 2.98$, $p < .01$, and it was evidence that the segmented orthography used in the OS group enhanced analogy word reading over phonological training with whole words.

A rival explanation that may account for the observed significant difference between the means is that perhaps the segmented orthography training (OS condition) was more difficult than learning to read whole words (PH condition). If this was true, then the extra training time experienced by the children in the OS condition could account for their increased analogy reading scores. This possibility was examined by comparing the average number of trials taken to learn to read the training words. It predicts that OS group would have taken significantly

more trials to reach criterion (2 successful trials without error) than the PH group.

The High prereading skills OS group took an average of 2.64 trials to learn the training words to criterion (SD = 1.83) and the High prereading PH group took an average of 2.11 trials (SD = 1.57). An independent 2-tailed t-test found that the difference between these means was not statistically significant , $t(20) = .72$, $p > .05$. The explanation that extra experience for the OS group with the training words accounts for the significantly higher analogy reading scores was not supported.

Hypothesis 2c

Phonological training in onset and rime using segmented text (OS condition) will enhance the ability to read words by orthographic analogy more than training with whole word text (SA condition).

This question was examined separately for the Low and High prereading skills groups. The mean of analogy word reading for the OS High prereading skills group was 4.91 (SD = 2.17) and 2.36 for the SA High prereading group (SD = 2.30). An independent 1-tailed t-test found that the difference between these means was statistically significant, $t(20) = 3.06$, $p < .01$. This finding was evidence that the combination of phonological training and training with segmented text led to more analogy word reading than training with whole words alone, at least for children with above average prereading skills.

The mean of analogy word reading for the OS Low prereading skills group was .91 (SD = 1.81) and .18 for the SA Low prereading group (SD = .41). An independent 1-tailed t-test found that the difference between these means was not statistically significant, $t(20) = .98$, $p > .05$. This finding was evidence that the combination of phonological training with segmented text was not sufficient to enhance analogy word reading with children that were below average on the prereading skills.

A rival hypothesis that may account for the observed difference among treatment group means was that one gender may have significantly more natural ability to learn to read than the other. This possibility was examined following Goswami (1986) by including gender as a variable in a 2 by 3 by 2 ANOVA (2 prereading skills groups by 3 treatment conditions by 2 genders) with analogy word reading as the dependent variable. The main effect for gender was not statistically significant, $F(1, 54) = .36$, $p > .05$, $MS_e = 2.30$, and neither were the interactions. The hypothesis that differences in gender accounted for the observed differences in analogy word reading was not supported and gender was dropped from further analyses.

Figure 8 graphs the total analogy word reading scores for each training set over the four training sessions. As the training sets were balanced for order of presentation using the Latin square method, the trial number represents the order in which the sets were presented to the child, not the set number as in Figure 7. This difference along with unequal time intervals between trials precluded trend analysis.

Figure 8 graphically illustrates the superior analogy word reading demonstrated by the OS High prereading skills group compared to the other groups. Note that the three groups with Low prereading skills are collapsed along the x axis. The 33 children in the Low prereading skills groups read only 13 analogy reading test words in total.

Figure 8. Analogy Word Reading Over Training Sets

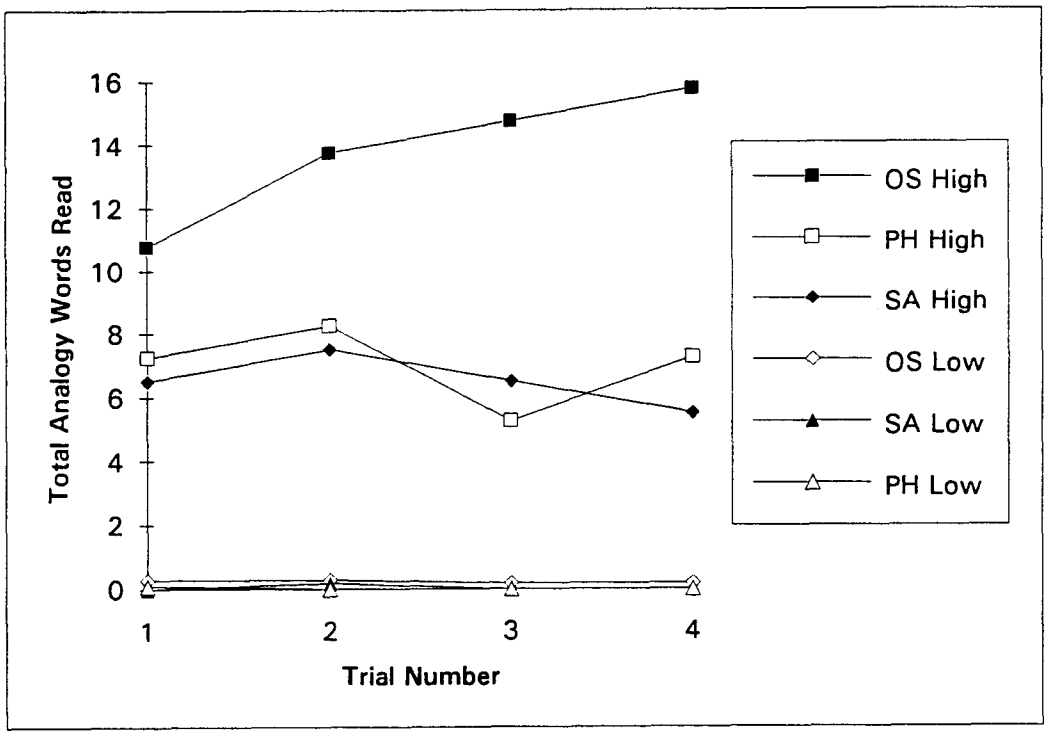

Hypothesis 3

The ability of prereaders to learn to read words by orthographic analogy will vary according to their level of prereading skills.

This hypothesis makes two predictions. First, hypothesis 3 predicts that children in the High prereading skills group will read significantly more analogy reading test words than children in the Low prereading group. Second, it predicts that children in the High prereading skills group will take fewer trials to learn the words in the training sets than children in the Low group.

Hypothesis 3 was examined with analogy word reading as the dependent variable using the method of planned orthogonal contrasts. The independent 1-tailed t-test found that the Low and High prereading skills groups differed significantly on the ability to read the analogy test words, $t(64) = 6.61$, $p < .001$. Children in the High prereading group read analogy test words on 111 occasions (mean = 3.27, SD = 2.48) whereas children in the Low prereading group read only 13 analogy test words (mean = .39, SD = 1.12).

To examine hypothesis 3 using the trials to criterion average scores as the dependent variable (average number of trials taken to learn the training sets), an independent 1-tailed t-test was performed on the criterion average means of the High and Low prereading skills groups. The average criterion score for the High prereading skills group was 2.11 (SD = 1.77) and 6.54 (SD = 3.29) for the Low group. Children in the Low prereading skills group took, on the average, over three times as many trials to learn to read the training items as children in the High group. Not surprisingly, the difference between these means proved to be significant, $t(64) = 6.81$, $p < .001$).

The findings from the t-tests using analogy word reading and the average trials to criterion scores as dependent variables converged. This convergence coupled with the magnitude of the differences in performance between groups was convincing evidence that one or more of the prereading skills measured was important for the successful reading of the analogy test words.

The methods of data analyses to examine hypothesis 3 up to this point used group means for comparisons (planned orthogonal contrasts, t-tests). Following the pilot, children were rated on each prereading skill by considering positive z scores to be High performance and negative z scores to represent Low performance. Table 18 summarizes the results.

Table 18. Subject's Prereading Skills Rankings and Reading Scores

Prereading Skill Ranking	READING TEST SCORE Analogy	Letter-sound	n	%
High R, L, P	89	29	22	33
High R only	9	1	11	17
High R, P only	12	0	6	9
High R, L only	5	0	4	6
High L only	6	4	3	5
High L, P only	1	0	1	2
High P only	0	0	1	2
Low R, L, P	2	1	18	27

Note. R = rhyming ability, L = letter-sound knowledge, P = phoneme identity.

Note that most of the words that could be read by analogy were read by children who were rated as High on all three skills. Further, these 22 children accounted for almost all of the letter-sound word reading. By contrast, the 18 children who were ranked Low on all three prereading skills read a combined total of only three analogy and letter-sound reading test words. This is further empirical support for splitting the sample into High and Low prereading skills groups based on the added z scores.

It is also noteworthy that the High letter only group read about equal numbers of analogy and letter-sound reading test words, suggesting that they read by letter-sound correspondence. Analogously, the High rhyme only group had some success reading the analogy reading test words but almost none reading the letter-sound test words.

Analysis of Covariance

The effects of the treatment conditions were also be examined by using the prereading skills as covariates and not splitting the group into Low and High prereading skills groups. This analysis treated the prereading skills as continuous variables and controlled for differences in these skills while examining treatment effects. The homogeneity of slopes assumption was examined prior to this analysis (see Appendix D) and the evidence suggested that it was plausible.

The results of the ANCOVA with analogy word reading as the dependent variable and rhyming ability, letter-sound knowledge, and phoneme identity as covariates are presented in Table 19.

Table 19. Analogy Word Reading With Prereading Skills as Covariates

Source	SS	DF	MS	F	p	R^2
Treatment	21.75	2	10.88	4.88	.01	.05
Rhyme	.09	1	.09	.04	.84	.00
Letter-sound	7.23	1	7.23	3.24	.08	.04
Phoneme id.	48.43	1	48.43	21.72	.00	.24
All covariates	201.15	3	67.05	30.07	.00	.35
Error	133.80	60	2.23			

Note. R^2 = .68.

The adjusted means for the SA group was 1.45 (SD = 1.96), for the PH group was 1.38 (SD = 2.03), and for the OS group was 2.66 (SD = 2.83). The adjusted means for the PH and the OS treatment conditions were contrasted using POC. The 1-tailed independent t-test found that the difference between these means was statistically significant, $t(42) = 2.84$, $p < .01$. Consistent with the POC analyses, the ANCOVA results demonstrated that the treatment effects remained significant even after controlling for relevant prereading skills. This is a stringent test for the effects of the treatment conditions in the study.

Hypothesis 4

Rhyming ability of prereaders will make an independent contribution in learning to read after accounting for the effects of age, vocabulary (PPVT-R), phoneme identity, treatment group membership, and letter-sound knowledge.

For a stringent test of this hypothesis, Bryant et al. (1990) recommended entering the relevant variables into a fixed-order multiple regression equation with rhyming ability entered as the last variable. If rhyming ability did make an independent contribution, it would account for a significant portion of the variance in reading after the effects of the related variables were removed. Treatment group membership was included to control for differences in training among treatment conditions.

There were two possible dependent variables for examining hypothesis 4; the trials to criterion averages and the analogy word reading test scores. The analyses will be considered in that order.

The results of the fixed-order multiple regression analysis using the criterion average scores are presented in Table 20.

Table 20. Relation of Rhyming Ability to Trials to Criterion After Controlling for Related Variables

Variable	R^2	R^2 Added	F
Treatment group	.07	.07	5.09*
Age	.10	.03	1.79
PPVT-R	.16	.06	4.80**
Phoneme identity	.47	.31	35.78***
Letter-sound	.48	.01	.63
Rhyming ability	.56	.08	11.01***

***p <.001. **p <.01. *p <.05.

The fact that rhyming ability accounted for 8% of the variance in the number of trials taken to learn to read the training sets is evidence that it does make an independent contribution to beginning reading. This finding is consistent with Bryant et al. (1990) where rhyming ability accounted for 7% in a similar analysis but with longitudinal data (rhyming ability measured at 4 years 7 months, reading measured at 6 years 7 months).

Note that phoneme identity accounts for a sizable amount of variation even after the effects for treatment group, age, and PPVT-R have been removed. Treatment group membership was entered as a variable to control for differences in the training among treatment groups.

Analogy word reading was another dependent variable to examine if rhyming made an independent contribution to reading. The results of are presented in Table 21.

Table 21. Relation of Rhyming Ability to Analogy Word Reading After Controlling for Related Variables

Variable	R^2	R^2 Added	F
Treatment group	.08	.08	5.48*
Age	.15	.07	5.31**
PPVT-R	.16	.01	.60
Phoneme identity	.60	.45	68.86***
Letter-sound	.63	.02	3.46**
Rhyming ability	.63	.00	.24

***p <.001. **p <.01. *p <.05.

Following the fixed-order multiple regression analysis for the criterion average scores, the pretest variables were entered first followed by rhyming ability. Contrary to the regression analysis with the criterion average scores as the dependent variable, rhyming ability did not make an independent contribution to analogy word reading. This finding was surprising given the evidence from previous hypotheses that supported the idea that the children used orthographic analogies based on rhyming. Note that phoneme identity accounted for an overwhelming majority of the variance in analogy word reading.

The finding that phoneme identity accounted for the majority of the variation in analogy word reading adds to the puzzle in this way. If phonemes were the units of sound that explained most of the word reading, then why were there not equal numbers of letter-sound test words read? In fact, the letter-sound test words were read on only 35 occasions.

The following section presents the results of two lines of inquiry designed to further examine the findings that phoneme identity accounted for a significant amount of variation in analogy word reading and that rhyming ability did not appear to make an independent contribution.

Phoneme Identity and Analogy Word Reading

Two questions drove the further examination of the relationship between phoneme identity and analogy word reading. First, children had been pretested for the ability to identify phonemes in the initial, medial, and final positions of short

words presented orally. Is the ability to identify phonemes in one of these positions more predictive of analogy word reading than the others? Second, what role did phoneme identity play in the reading of the analogy test words? The results of the analyses to examine these questions will be presented in order.

To examine the question of which form of phoneme identity best predicted analogy word reading, a discriminant analysis was performed. The ability to identify phonemes in the initial, medial, and final positions served as independent variables in a stepwise discriminant analysis to estimate their ability to discriminate between children who could read the analogy test words and those who could not. Given the size and equality of the dependent variable (n = 33 in each group) and an evaluation of normality, there was no threat to multivariate analysis (see Appendix D).

The results of the discriminant function analysis are presented in Table 22.

Table 22. Predicting Analogy Word Reading with Three Forms of Phoneme Identity

Variable	F	Standard. Coeff.	Structure Coeff.	R^2
Final phoneme identity	35.22***	.70	.88	.35
Initial phoneme identity	6.81***	.51	.76	.06
Medial phoneme identity	.21			

Note. Wilk's Lambda = .58, $F(2,63) = 22.61$, $p < .001$.
***$p < .001$.

The ability to identify phonemes in the final position proved to be the best single discriminator among the forms of phoneme identity. The ability to identify initial phonemes in the initial position was statistically significant as well. With the use of a jackknifed classification procedure for the total sample of 66 children, 77.3% were classified correctly as analogy readers or non-analogy word readers.

The second question asked concerned the role of phoneme identity in the reading of the analogy test words. The evidence so far suggests that children able to identify the last phoneme in the analogy test words somehow benefited from this information. But how so? A possible explanation is that the final phoneme, represented by the final letter, served as a clue to the sound of the rime ending. For example, the knowledge that a test word ended in the "t" sound would be a useful clue to establishing the sound of the rime, even if the medial phoneme was ignored. If this was the strategy used to read the analogy test words, identifying the final phoneme may have been the first step the children took to use make an orthographic analogy based on the rime ending.

For example, if the response for the test word 'bad' was "bed", and if "bed" rhymed with one of the training items, this would be evidence that children were making rhyme-based analogies to read. However, the orthography upon which the analogy was based would be the final letter, which is represented phonologically by a single phoneme, not the rime. Note that the same strategy produces a correct response to an analogy test word

but an incorrect response to a letter-sound correspondence test word.

If this explanation is true, it predicts children would have responded incorrectly to the letter-sound test words with words that ended with the final phoneme sounded correctly, and at the same time rhymed with a training word. It also predicts that these words would probably be the most frequently made incorrect response.

This is a stringent test of the explanation for two reasons. First, it places two constraints on an incorrect response before it is considered an example of the strategy (i.e., the final phoneme must be sounded correctly and the incorrect response must rhyme with a training word). Second, it allows for all other possible incorrect responses to fall outside of this category and be counted as evidence against the explanation. All attempts children made to read test words were recorded. The errors children made attempting to read the letter-sound correspondence test words are presented in Table 23.

The means for incorrect responses to letter-sound test words that both sounded the final phoneme correctly and rhymed with a training word was 12.87 (SD = 3.50). The mean for all other incorrect responses was 6.88 (SD = 2.67). A 1-tailed dependent t-test found that the difference between these means was statistically significant, $t(7) = 3.29$, $p < .01$. This is evidence in support of the explanation that children made a rhyme-based analogy to the training words that was also based on the sound of the final phoneme. This strategy would be

successful for reading the analogy test words but not for reading the letter-sound test words.

Table 23. Error Analysis of Letter-sound Correspondence Word Reading

Test Word	Incorrect Word Responses	
	Rhyming[a]	Non-rhyming
bad	17	7
bet	23	11
hum	9	5
bag	6	9
pit	14	6
sit	11	7
rag	9	7
run	14	3
Totals	103	55

[a]The incorrect response rhymed with a training word.

Table 23 shows that on 103 occasions children responded to a letter-sound knowledge test word with a word that ended with the final phoneme sounded correctly, and at the same time rhymed with a training word. For example, the most common incorrect response for the letter-sound test word 'bad' was "bed" (8 occasions). The most common error for the test word 'run' was "ran" (10 occasions). If the child identified the sound of the final phoneme first, and then attempted to make an analogy based on the

sound of the rime in a training word, the 103 occasions where a word that rhymed with a training word was incorrectly given for a letter-sound test word would be explained. The analogy between the test word and the training word would still be rhyme-based, but it would be made on the basis of sound, not text. An orthographic analogy could only be made between the analogy test words and the training words.

Summary

Hypothesis 1 questioned whether prereaders will learn to read more words on the basis of orthographic analogy than by letter-sound correspondences. Children read significantly more analogy reading test words than letter-sound correspondence test words, $t(65) = 5.74$, $p < .001$.

Hypotheses 2a, 2b, and 2c examined the treatment effects. Phonological training with onset and rime using whole word text did *not* increase analogy word reading over the same training without it, $t(20) = .08$, $p > .05$. However, prereaders trained with segmented text read significantly more analogy test words than did children trained with whole word text, $t(20) = 2.98$, $p < .01$. Finally, the combination of phonological training and training with segmented text led to more analogy word reading than training with whole word text alone for children with above average prereading skills, $t(20) = 3.06$, $p < .01$, but not for children with low prereading skills, $t(20) = .98$, $p > .05$.

Hypothesis 3 questioned whether the ability of prereaders to learn to read words by orthographic analogy will vary according

to their level of prereading skills. Prereaders in the High prereading skills group read significantly more analogy test words than did children in the Low prereading skills group, $t(64) = 6.61$, $p < .001$. As well, children in the High group took fewer trials to learn to read the training items than did children in the Low prereading skills group, $t(64) = 6.81$, $p < .001$).

The ANCOVA that examined treatment condition effects on analogy word reading after controlling for prereading skills confirmed the results from the planned orthogonal contrasts. The ANCOVA analysis was complemented by the multiple regression analysis in hypothesis 4 where the effects of prereading skills on analogy word reading could be examined after controlling for differences in treatment conditions and other pretests.

Hypothesis 4 examined the claim that rhyming ability made an *independent* contribution to reading. The two possible dependent variables were the number of trials taken to learn the training items and analogy test word reading. The results were equivocal.

Using the trials to criterion as the dependent variable, rhyming ability contributed a statistically significant 8% of variance after accounting for the effects of all other pretests (i.e., age, treatment group membership, PPVT-R, phoneme identity, and letter-sound knowledge). However, rhyming ability did *not* make an independent contribution to reading when analogy word reading was the dependent variable. In fact, rhyming did not account for any variance after controlling for the effects of the pretests. Phoneme identity, on the other hand, accounted for 45% of the variance in analogy word reading.

Further analysis using the three forms of phoneme identity (i.e., in initial, medial, and final positions) found that the ability to identify phonemes in the final position was the best single discriminator between readers and non-readers.

VI. DISCUSSION

Two explanations of the relationship between phonological awareness were examined. One account argues that the important units of sound are phonemes and that a combination of phoneme identity and letter-sound knowledge is sufficient for reading to begin (e.g., Byrne & Fielding-Barnsley, 1993; Ehri, 1991). The proposed strategy for reading is recoding letter-sounds at the phoneme level.

Another view argues that the important units of sound are onset and rime; units that are key to the rhyming ability possessed by prereaders (Bryant et al., 1990; Goswami & Bryant, 1990). The proposed reading strategy is the use of orthographic analogy based on rhyming ability. To accomplish this, children must recognize that the rime endings of rhyming words typically are common text. This study examines the Goswami and Bryant (1990) model but has implications for the Byrne and Ehri model as well.

Convincing evidence about the relationship between phonological awareness and beginning reading requires information on both the kind of phonological and orthographic units involved and how these units figure in the strategies children use. Also, the sample should consist of prereaders to rule out the possible reciprocal effects between phonological skills and reading ability.

Previous research on the use of orthographic analogy found that young readers can use orthographic analogy (Ehri, 1992a; Goswami, 1988; Peterson & Haines, 1992) but when the study

samples readers, it is unclear whether ability in orthographic analogy precedes reading or follows it. Studies sampling prereaders have found that many prereaders can use orthographic analogy when first starting to read (Goswami, 1986, 1988) but these studies did not measure potentially relevant prereading skills (i.e., rhyming ability, phoneme identity, letter-sound knowledge). A unique feature of this study on beginning reading was that it, concurrently, sampled prereaders, measured relevant prereading skills, and gathered evidence on reading strategy.

The design for the current study was derived from Baron (1977). Baron successfully taught kindergartners to read unfamiliar CVC words after very brief periods of training that consisted of rote memorizing rhyming words presented as segmented text. He tested strategy by using two types of test words; one type could be read by analogy to training words and the other required using letter-sound correspondences. He concluded that children could use analogy in the first steps of reading. However, it was not clear what caused the effect that he found.

Although Goswami and Bryant were largely in agreement with Baron's conclusion that the children used an analogy strategy to read new words, they argued that it was possible that the children did not read new words by making an orthographic analogy between training and test words, but merely assembled the segmented pieces of training text. In that case, no analogy would be required. The current study unpacks Baron (1977) by articulating the effects of phonological training from effects due to segmented text.

Rhyme-Based Analogies

The prereaders in the main study demonstrated repeatedly that learning to read a new word was relatively easy if a rhyme-based analogy could be used to read the new word, but was an arduous task if it could not. Of the 66 children in the study, 33 read analogy test words on 124 occasions while only 17 children read letter-sound correspondence test words on 35 occasions. Also, two children who each read five of the letter-sound test words were identified as outliers and may have been readers that were not screened from the study. If this was true, the already large difference between the observed orthographic analogy and letter-sound word reading was a conservative estimate.

The already strong finding that the children used a rhyme-based analogy to read was upheld in the accounts they provided when asked to explain how they read the test words. This information was requested after each successful reading. While many children did not provide explanations that described their strategy (e.g., "I just read it", "I don't know", "I can read now"), several children gave clear explanations. The most common explanation, given by 15 children, was that the test word rhymed with a training word.

In addition, four conceivable rival explanations were tested that could explain the results and none were supported.

The study provided convincing evidence that prereaders can use orthographic analogy in the first steps of reading (Baron, 1977; Goswami and Bryant, 1990), but not for the view that

considerable experience recoding letter-sounds at the phoneme level is a prerequisite (Ehri, 1992a).

What, then, are the effects of phonological training in onset and rime, and of segmented text?

Treatment Effects

Results showed that phonological training with onset and rime using whole word text did *not* increase analogy word reading over the same training without it. The current study provided evidence for the claim that *brief* phonological training with onset and rime did not increase analogy word reading over the same training without it.

This also suggested that the analogy word reading observed by Baron (1977) may not have been a result of the phonological training in onset and rime that may have been implicitly taught by the use of segmented text.

This finding was not consistent with that of Peterson and Haines (1992) who found significant gains in the use of orthographic analogy following phonological training with onset and rime. A possible explanation for this disagreement is that the children in the Peterson and Haines (1992) study received considerably more training (seven 15-minute sessions over 1 month) than the children in the current study.

The study found that prereaders trained with segmented text read significantly more analogy test words than did children trained with whole word text. In fact, all but one child who had high prereading skills and received training with segmented text

read analogy test words. The lone exception was detected as an outlier.

What then was the role of segmented text in the use of orthographic analogy? A possible explanation is that when children are trained with text that is segmented at the boundary of onset and rime, the similarity between rime ending and common text, the basis of orthographic analogy, is highlighted. This visual segmentation of rhyming words aide the mapping of the rime ending directly onto text.

The examination of training effects in the current study provided strong evidence in support of the view that the use of orthographic analogy by beginning readers is related to rhyming ability (Goswami & Bryant, 1990). In addition, training with text segmented at the onset and rime boundary facilitated the process.

Prereading Skills

The level of prereading skills proved to be highly predictive of learning to read. The 33 children in the Low prereading skills group read analogy test words on only 13 occasions compared to 111 times for children in the High prereading skills group. The magnitude of this difference was convincing evidence that one or more of the prereading skills played an essential role in learning to read. Further, it suggested that prereaders' ability to learn to read words using rhyme-based analogies was bimodaly distributed.

However, the results from the analysis that compared the prereading skills groups on reading did not reveal the relative contribution of rhyming ability, phoneme identity, and letter-sound knowledge. This is important because the two models of phonological awareness and beginning reading that guided the study make different predictions about the primary sound unit; whether phoneme, or onset and rime. Further, as phonemes are associated with letter-sound recoding, and onset and rime with the use of orthographic analogy, identification of the primary sound unit is also indicative of reading strategy.

Rhyme

Bryant et al. (1990) claimed that rhyming ability made an *independent* contribution to reading. Testing this claim meant examining the relative contribution of all three prereading skills (i.e., rhyming ability phoneme identity, letter-sound knowledge) while controlling for other potentially related variables.

The two possible dependent variables that could be used to examine the hypothesis that rhyming ability makes an independent contribution to reading were the number of trials taken to learn the training items (an estimate of the rate of learning to read according to Yopp, 1988), and analogy test word reading. The results were equivocal.

Using the trials to criterion as the dependent variable, rhyming ability contributed an additional 8% of variance after accounting for the effects of all other variables (i.e., age,

treatment group membership, PPVT-R, phoneme identity, and letter-sound knowledge). This result supported the Bryant et al. (1990) claim that rhyming ability contributed independently to reading.

However, rhyming ability did *not* make an independent contribution to reading when analogy word reading was the dependent variable. In fact, rhyming did not account for any variance after controlling for the effects of other variables. Phoneme identity, on the other hand, accounted for 45% of the variance in analogy word reading. Bryant et al.'s (1990) view that rhyming ability makes an independent contribution to reading was not supported.

There are at least two explanations for the discrepancy between the findings of the current study and the Bryant et al., (1990) findings. One explanation may lie in the tasks used to measure phoneme awareness. Bryant et al. estimated phoneme awareness with tasks that required phoneme deletion or phoneme tapping. The current study estimated phoneme awareness with a task that required phoneme identity. According to Yopp (1988), phonological manipulations requiring identity are easier than those requiring deletion. It is possible that prereaders are able to use their ability to *identify* phonemes when first learning to read but not the ability to delete or tap phonemes. If this explanation is true, it illustrates the importance Blackman (1983), Wagner and Torgesen (1987) and others have accorded to identifying particular forms of phonemic awareness when studying its relationship to reading.

A second reasonable explanation is based on the fact that the Bryant et al. (1990) evidence was longitudinal whereas the current study measured rhyming ability and word reading concurrently. It is possible that children require more experience with reading than was provided by the study before an independent relationship between rhyming ability and reading could be detected.

Still, this result was surprising because the analogy that could be made between the analogy reading test words and the training words was based on rime endings. The common sounds among rhyming words were represented by common text, the last two letters. If phoneme identity was the primary phonological skill in beginning reading, then an equal number of letter-sound words should have been read. This was not so.

Further analysis using the three forms of phoneme identity (i.e., in initial, medial, and final positions) found that the ability to identify phonemes in the final position was the best single discriminator between readers and non-readers. Given that finding, what role did the ability to identify final phonemes play in analogy word reading?

A possible explanation was that the final phoneme, represented by the final letter, was used to determine the sound of the rime ending, and the medial vowel played a minor role. If this was true, children did not differentiate the phonological representation of the final letter (i.e., the final phoneme) from the rhyme. The children may not have used the information that the medial vowel is what distinguishes "ed" from "ad".

If this explanation was true, it predicted children would have responded incorrectly to letter-sound test words with words that ended with the final phoneme sounded correctly and that rhymed with a training word. The error analysis revealed that on 103 occasions children responded to a letter-sound test word that met these criteria compared to 55 all other incorrect responses. The explanation that children primarily used the final phoneme to read test words was supported. This explanation can account for both the successful readings of analogy test words and the most common incorrect responses to the letter-sound test words.

The finding relating phoneme identity to the use of rhyme-based orthographic analogy by beginning readers represents an original and significant contribution to the literature linking phonological awareness and beginning reading.

Educational Implications

The training that so easily taught prereaders to read unfamiliar words was notable for both its simplicity and brevity. Learning to read the two pairs of rhyming training words took seconds for many children, not minutes. That they were then able to read unfamiliar words is remarkable.

An important pedagogical implication of the current study is that prereaders may learn to read new words easily and quickly given two conditions. First, the children must have sufficient levels of relevant prereading skills. Second, the teaching should be based on words that rhyme. Further, the process may be enhanced by using text segmented at the onset and rime boundary.

Limitations and Suggestion For Future Research

There are several limitations to the study. First of all, social background information was received on only 38 of the 66 families in the study. As a consequence, caution must be exercised in generalizing any findings.

Second, the sample was adequate in size (i.e., 11 subjects per treatment group) to obtain satisfactory estimates of the variables in the study, but a larger sample would provide more stable estimates and so would produce more confident results. The findings must be viewed in relation to the size of the sample.

It should be noted that the study addresses the question of reading mono-syllabic words presented singly to kindergarten children. The findings are not easily generalized to the fluent reading of connected text.

The finding that phoneme identity, especially of the final phoneme in CVC words, may be related to reading rhyming words invites further research. A study that followed the design of the current study but that varied several medial consonants in reading test words while keeping final consonants intact could examine this question more completely.

Another future research question generated by the current study is the possibility of a relationship between rhyming ability and identifying the final phoneme. If rhyming ability were to be enhanced by training (e.g., Peterson & Haines, 1992), would this instill or increase the ability to identify the final phoneme?

Finally, about half of the prereaders took to reading by analogy quickly and the remaining children found the task too arduous. The implication for future research is to collect information that could possibly account for this difference. Experience with reading provided by parents or preschools are likely candidates.

In summary, the current study makes several important contributions to the literature on phonological awareness and beginning reading. In particular, the study provided convincing evidence that prereaders can use orthographic analogy based on rhyming ability in the first steps of reading. The importance of using text segmented at the onset-rime boundary for training items was also convincingly demonstrated. Finally, evidence for the theoretically intriguing possibility of a link between final phoneme identity and the use of rhyming-based orthographic analogy was presented.

REFERENCES

Alegria, J., Pignot, E., & Morais, J. (1982). Phonetic analysis of speech and memory codes in beginning readers. Memory and Cognition, 10, 451-456.

Ball, E. W., & Blachman, B. A. (1991). Does phoneme awareness training in kindergarten make a difference in early word recognition and developmental spelling? Reading Research Quarterly, 26, 49-66.

Baron, J. (1977). Mechanisms for pronouncing printed words: Use and acquisition. In D. LaBerge & S. J. Samuels (Eds.), Basic processes in reading: Perception and comprehension (pp. 175-216). Hillsdale, NJ: Lawrence Erlbaum Associates.

Baron, J. (1979). Orthographic and word-specific mechanisms in children's reading of words. Child Development, 50, 60-72.

Barron, R. W. (1986). Word recognition in early reading: A review of the direct and indirect access hypotheses. Cognition, 24, 93-119.

Blackman, J. (1983). The role of psycholinguistic skills in reading acquisition: A look at early readers. Reading Research Quarterly, 18, 466-479.

Bowey, J. A., & Francis, J. (1991). Phonological analysis as a function of age and exposure to reading instruction. Applied Psycholinguistics, 12, 91-121.

Bradley, L. & Bryant, P.E. (1983). Categorizing sounds and learning to read: A causal connection. Nature, 301, 419-421.

Bradley, L. & Bryant, P.E. (1985). Rhyme and reason in reading and spelling (IARLD Monographs, No. 1). Ann Arbor: University of Michigan Press.

Brown, A. L. (1989). Analogical learning and transfer: What develops? In S. Vosniadou & A. Ortony (Eds.), Similarity and analogical reasoning (pp.369-409). Cambridge: Cambridge University Press.

Brown, A. L., Kane, M. J., & Long, C. (1989). Analogical transfer in young children: Analogies as tools for communication and exposition. Applied Cognitive Psychology, 3, 275-293.

Bruce, D. J. (1964). The analysis of word sounds by young children. British Journal of Educational Psychology, 34, 158-170.

Bryant, P. E., Bradley, L., Maclean, M., & Crossland, J. (1989). Nursery rhymes, phonological skills and reading. Journal of Child Language, 16, 407-428.

Bryant, P.E., Maclean, M., Bradley, L., & Crossland, J. (1990). Rhyme and alliteration, phoneme detection, and learning to read. Developmental Psychology, 26, 429-438.

Byrne, B. (1992). Studies in the acquisition procedure for reading: Rationale, hypotheses, and data. In P. B. Gough, L. C. Ehri, & R. Treiman (Eds.), Reading Acquisition (pp. 1-34). Hillsdale, NJ: Lawrence Erlbaum.

Byrne, B., & Fielding-Barnsley, R. (1989). Phonemic awareness and letter knowledge in the child's acquisition of the alphabetic principle. Journal of Educational Psychology, 81, 313-321.

Byrne, B., & Fielding-Barnsley, R. (1990). Acquiring the alphabetic principle: A case for teaching recognition of phoneme identity. Journal of Educational Psychology, 82, 805-812.

Byrne, B., & Fielding-Barnsley, R. (1991). Evaluation of a program to teach phonemic awareness to young children. Journal of Educational Psychology, 83, 451-455.

Byrne, B., & Fielding-Barnsley, R. (1993). Evaluation of a program to teach phonemic awareness to young children: A 1-year follow-up. Journal of Educational Psychology, 85, 104-111.

Calfee, R. C. (1977). Assessment of independent reading skills: Basic research and practical applications. In A. S. Reber & D. L. Scarborough (Eds.), Toward a psychology of reading (pp. 289-323). Hillsdale, NJ: Lawrence Erlbaum.

Clay, M. M. (1966). Emergent reading behavior. Unpublished doctoral dissertation. University of Auckland, Auckland, New Zealand.

Content, A. (1985). L'analyse segmentale de la parole chez l'enfant. Unpublished doctoral dissertation. Universite' Libre de Bruxelles.

Content, A., Morais, J., Alegria, J., & Bertelson, P. (1982). Accelerating the development of phonetic segmentation skills in kindergartners. Cahiers de Psychologie Cognitive, 2, 259-269.

Dunn, L., & Dunn, L. (1981). Peabody Picture Vocabulary test-revised. Circle Pines, MN: American Guidance Service.

Durkin, D. (1966). Children who read early. New York: Teachers College Press.

Ehri, L. C. (1983). A critique of five studies related to letter-name knowledge and learning to read. In L. M. Gentile, M. L. Kamil, & J. S. Blanchard (Eds.), Reading research revisited. Columbus, OH: Charles Merrill.

Ehri, L. C. (1991). Development of the ability to read words. In R. Barr, M. L. Kamil, P. B. Mosenthal & P. D. Pearson (Eds.), Handbook of reading research: Volume II (pp. 383-417). New York: Longman.

Ehri, L. C. (1992a). Beginners need some decoding skill to read words by analogy. Reading Research Quarterly, 27, 12-26.

Ehri, L. C. (1992b). Reconceptualizing the development of sight word reading and its relationship to recoding. In P. B. Gough, L. C. Ehri, & R. Treiman (Eds.), Reading Acquisition (pp. 107-143). Hillsdale, NJ: Lawrence Erlbaum.

Elkonin, D. B. (1963). The psychology of mastering the elements of reading. In B.. Simon & J. Simon (Eds.), Educational psychology in the U.S.S.R. London: Routledge & Kegan Paul.

Elkonin, D. B. (1973). U.S.S.R. In J. Downing (Ed.), Comparative reading. New York: Macmillan.

Ellis, N. C., & Large, B. (1987). The development of reading: As you seek so shall you find. British Journal of Developmental Psychology, 78, 1-28.

Fox, B., & Routh, D. K. (1975). Analyzing spoken language into words, syllables, and phonemes: A developmental study. Journal of Psycholinguistic Research, 4, 331-342.

Fox, B., & Routh, D. K. (1976). Phonemic analysis and synthesis as word-attack skills. Journal of Educational Psychology, 68, 70-74.

Gesell, A. (1940). The first five years of life. New York: Harper & Sons.

Glass, G. V. & Hopkins, K. D. (1984). Statistical methods in education and psychology. New Jersey: Prentice-Hall.

Goodman, K. S. (1989). Whole language is whole: A response to Heymsfeld. Educational Leadership, 46, 69-70.

Goodman, Y. M. (1967). A psycholinguistic description of observed oral reading phenomena in selected young beginning readers. Unpublished doctoral dissertation, Wayne State University, Detroit.

Goswami, U. (1986). Children's use of analogy in learning to read: A developmental study. Journal of Experimental Child Psychology, 42, 73-83.

Goswami, U. (1988). Orthographic analogies and reading development. Quarterly Journal of Experimental Psychology, 40A, 239-268.

Goswami, U. (1990a). Phonological priming and orthographic analogies in reading. Journal of Experimental Child Psychology, 49, 323-340.

Goswami, U. (1990b). A special link between rhyming skills and the use of orthographic analogies by beginning readers. Journal of Child Psychology and Psychiatry, 31, 301-311.

Goswami, U. (1991). Learning about spelling sequences: The role of onsets and rimes in analogies in reading. Child Development, 62, 1110-1123.

Goswami, U., & Bryant, P. (1990). Phonological skills and learning to read. Hove: Lawrence Erlbaum Associates.

Goswami, U., & Bryant, P. (1992). Rhyme, analogy, and children's reading. In P. B. Gough, L. C. Ehri, & R. Treiman (Eds.), Reading Acquisition (pp. 49-64). Hillsdale, NJ: Lawrence Erlbaum.

Goswami, U., & Mead, F. (1992). Onset and rime awareness and analogies in reading. Reading Research Quarterly, 27, 152-162.

Hohn, W. E., & Ehri, L. C. (1983). Do alphabet letters help pre-readers acquire phonemic segmentation skill? Journal of Educational Psychology, 75, 752-762.

Huey, E. B. (1962). The psychology and pedagogy of reading. Cambridge, MA: MIT Press. (Original work published 1908).

Jenkins, J. R., Bausell, R. B., & Jenkins, L. M. (1972). Comparison of letter name and letter sound training as transfer variables. American Educational Research Journal, 9, 75-86.

Just, M. A., & Carpenter, P. A. (1987). The psychology of reading and language comprehension. Boston: Allyn & Bacon.

Kirtley, C., Bryant, P., MacLean, M., & Bradley, L. (1989). Rhyme, rime and the onset of reading. Journal of Experimental Child Psychology, 48, 224-245.

Lenel, J. C., & Cantor, J. H. (1981). Rhyme recognition and phonemic perception in young children. Journal of Psycholinguistic Research, 10, 57-68.

Leong, C. K., & Haines, C.F. (1978). Beginning readers' analysis of words and sentences. Journal of Reading Behavior, 10, 393-407.

Liberman, I. Y., Shankweiler, D., Fischer, F. W., & Carter, B. (1974). Explicit syllable and phoneme segmentation in the young child. Journal of Experimental Child Psychology, 18, 201-212.

Lomax, R. G., & McGee, L. M. (1987). Young children's concepts about print and reading: Toward a model of word reading acquisition. Reading Research Quarterly, 22, 237-256.

Lundberg, I., & Hoien, T. (1991). Initial enabling knowledge and skills in reading acquisition: Print awareness and phonological segmentation. In D. J. Sawyer and B. J. Fox (Eds.), Phonological awareness in reading: The evolution of current perspectives (pp. 73-95). New York: Springer-Verlag.

Lundberg, I., Frost, J. & Petersen, O. P. (1988). Effects of an extensive program for stimulating phonological awareness in preschool children. Reading Research Quarterly, 23, 263-284.

Lundberg, I., Olofsson, A., & Wall, S. (1980). Reading and spelling skills in the first school years predicted from phonemic awareness skills in kindergarten. Scandinavian Journal of Psychology, 21, 159-173.

MacLean, M., Bryant, P. E., & Bradley, L. (1987). Rhymes, nursery rhymes and reading in early childhood. Merrill-Palmer Quarterly, 33, 255-282.

Mann, V. (1986). Phonological awareness: The role of reading experience. Cognition, 24, 65-92.

Morais, J. (1991). Phonological awareness: A bridge between language and literacy. In D. J. Sawyer and B. J. Fox (Eds.), Phonological awareness in reading: The evolution of current perspectives (pp.31-71). New York: Springer-Verlag.

Morphett, M. V., & Washburne, C. (1931). When should children begin to read? Elementary School Journal, 31, 496-508.

Olofsson, A., & Lundberg, I. (1983). Can phonemic awareness be trained in kindergarten? Scandinavian Journal of Psychology, 24, 35-44.

Olofsson, A., & Lundberg, I. (1985). Evaluation of long terms effects of phonemic awareness training in kindergarten. Illustrations of some methodological problems in evaluation research. Scandinavian Journal of Psychology, 26, 21-34.

Ott, L. (1988). An introduction to statistical methods and data analysis. Boston: PWS Kent.

Pedhazur, E. J. (1982). Multiple regression in behavioral research: Explanation and prediction. New York: Holt, Rinehart, & Winston.

Perfetti, C. A., Beck, I., Bell, L. C., & Hughes, C. (1987). Phonemic knowledge and learning to read are reciprocal: A longitudinal study of first-grade children. Merrill-Palmer Quarterly, 33, 283-319.

Peterson, M. E., & Haines, L. P. (1992). Orthgraphic analogy training with kindergaten children: Effects on analogy use, phonemic segmentation, and letter-sound knowledge. Journal of Reading Behavior, 24, 109-127.

Pick, A., Unze, M., Brownell, C. A., Drozdal, J. G., & Hopmann, M. K. (1978). Young childrens's knowledge of word structure. Child Development, 49, 669-680.

Plessas, G. P., & Oaks, C. R. (1964). Pre-reading experiences of selected early readers. Reading Teacher, 17, 241-245.

Rayner, K., & Pollatsek, A. (1989). The psychology of reading. Englewood Cliffs, NJ: Prentice-Hall.

Reid, J. (1966). Learning to think about reading. Educational Research, 9, 56-62.

Samuels, S.J. (1972). The effect of letter-name knowledge on learning to read. American Educational Research Journal, 9, 65-74.

Sawyer, D. J., & Fox, B. J. (1991). Phonological awareness in reading: The evolution of current perspectives. New York: Springer-Verlag.

Shankweiler, D., & Liberman, I. Y. (1989). Phonology and reading disability: Solving the reading puzzle. Ann Arbor: University of Michigan Press.

Share, D. L., Jorm, A. R., MacLean, R., & Matthews, R. (1984). Sources of individual differences in reading acquisition. Journal of Educational Psychology, 76, 1309-1324.

Shavelson, R. J. (1988). Statistical reasoning for the behavioral sciences. Boston: Allyn & Bacon.

Skjelfjord, V. J. (1987). Phonemic segmentation: An important subskill in learning to read. Scandinavian Journal of Educational Research, 31, 41-57.

Smith, F. (1973). Psycholinguistics and reading. New York: Holst, Rinehart, and Winston.

Stanovich, K. E. (1986). Matthew effects in reading: Some consequences of individual differences in the acquisition of literacy. Reading Research Quarterly, 21, 360-406.

Stanovich, K. E. (1988). Children's reading and the development of phonological awareness. Detroit: Wayne State University Press.

Stanovich, K. E., Cunningham, A., & Cramer, B. (1984). Assessing phonological awareness in kindergarten children: Issues of task comparability. Journal of Experimental Child Psychology, 38, 175-190.

Tabachnick, B. G., & Fidell, L. S. (1989). Using multivariate statistics. New York: Harper & Row.

Treiman, R. (1983). The structure of spoken syllables: Evidence from novel word games. Cognition, 15, 49-74.

Treiman, R. (1985). Onsets and rimes as units of spoken syllables: Evidence from children. Journal of Experimental Child Psychology, 39, 161-181.

Treiman, R. (1991). Phonological awareness and its role in learning to read and spell. In D. J. Sawyer and B. J. Fox (Eds.), Phonological awareness in reading: The evolution of currentperspectives (pp. 159-189). New York: Springer-Verlag.

Treiman, R. (1992). The role of intrasyllabic units in learning to read and spell. In P. B. Gough, L. C. Ehri, & R. Treiman (Eds.), Reading Acquisition (pp. 65-106). Hillsdale, N. J.: Lawrence Erlbaum.

Treiman, R., & Baron, J. (1981). Segmental analysis ability: Development and relation to reading ability. In G. E. MacKinnon & T. G. Waller (Eds.), Reading research: Advances in theory and practice (Vol. 3, pp. 159-198). San Diego, CA: Academic Press.

Tunmer, W. E., & Nesdale, A. R. (1985). Phonemic segmentation skill and beginning reading. Journal of Educational Psychology, 77, 417-427.

Tunmer, W. E., & Rohl, M. (1991). Phonological awareness and reading acquisition. In D. J. Sawyer and B. J. Fox (Eds.), Phonological awareness in reading: The evolution of current perspectives (pp. 1-30). New York: Springer-Verlag.

Wagner, R. K., & Torgesen, J. K. (1987). The nature of phonological processing and its causal role in the acquisition of reading skills. Psychological Bulletin. 101, 192-212.

Wagner, R. K., Torgesen, J. K., Laughon, P., Simmons, K., & Rashotte, C. (1993). Development of young reader's phonological processing abilities. Journal of Educational Psychology, 85, 83-103.

Wise, B. W., Olson, R. K., & Treiman, R. (1990). Subsyllabic units as aids in beginning readers' word learning: Onset-

rime versus post-vowel segmentation. Journal of Experimental Child Psychology, 49, 1-19.

Yopp, H. K.. (1988). The validity and reliability of phonemic awareness tests. Reading Research Quarterly, 23, 159-176.

Zhurova, L. E. (1963). The development of analysis of words into their sounds by preschool children. Soviet Psychology and Psychiatry, 72, 17-27.

Appendix A: Definition of Terms

This appendix provides definitions of some terms used in the current study. Written letters and words presented to the child are in single quotation marks (e.g., 'cat') and spoken letters or words are in double quotation marks (e.g., "c", "cat").

Alphabetic Principle - useable knowledge that phonemes can be represented by letters, such that whenever a particular phoneme occurs in a word, and in whatever position, it can be represented by the same letter.

Continuant Consonants - consonants produced by a continued flow of air at their places of articulation (e.g., "f", "h", "s", v").

Graphemes - letters or letter clusters (e.g., 'c', 'th') corresponding to phonemes.

Onset - the sound of the initial consonant or consonant cluster of a syllable (e.g., "c" in "cat", "str" in "string").

Onset-Rime Segmentation - articulating the onset of a syllable separately from the rime (e.g., "cat" as "c-at").

Orthographic Analogy - the ability to make inferences from similarities in spelling to similarities in sound.

Phones - speech sounds (e.g., the sound of the letter 't' in 'ten').

Phonemes - a group of phones that speakers of a language consider to be variations on the same sound, (e.g., the sounds of the letter 't' in 'ten' and 'stop') and having a distinct function in determining meaning.

Phoneme Blending - blending isolated sounds into words, e.g., "c-a-t" into "cat" (Yopp, 1988).

Phoneme Deletion - deleting phonemes from words, e.g., deleting the "c" sound from "cat" (Yopp, 1988).

Phoneme Segmentation - articulating the phonemes of a word separately and in order, e.g., "cat" into "c-a-t" (Yopp, 1988).

Phonemic Awareness - "conscious access to the phonemic level of the speech stream and some ability to cognitively manipulate representations at this level" (Stanovich, 1986, p. 362).

Phonological Awareness - conscious access to the constituent sounds of speech and the ability to manipulate these sounds. Note that the difference between phonological and phonemic awareness is the that latter requires access to sounds at the phoneme level.

Rime - the sound of the vowel and any following consonants, e.g., "at" in "cat" (Treiman, 1991).

Stop Consonants - consonants produced by momentarily obstructing the flow of air at their places of articulation (e.g., "b", "d", "g", "k", "p", and "t").

Appendix B: Pilot Study Training Illustrations and Words

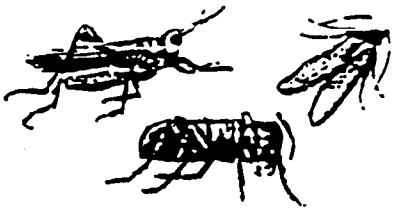

bug

mug

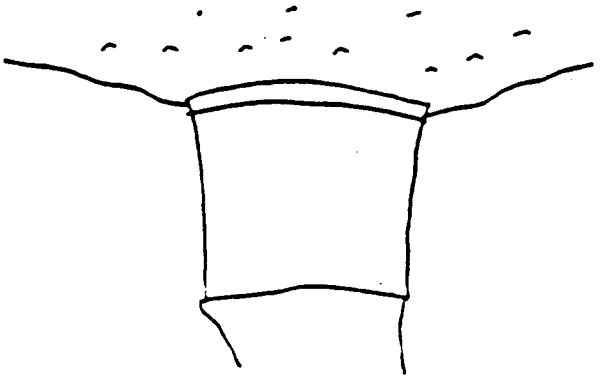

dam

ram

Appendix B: Pilot Study Training Illustrations and Words

bat

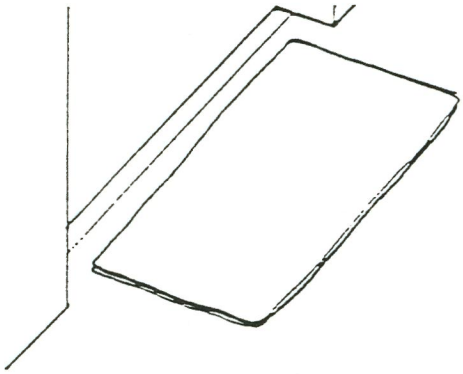

mat

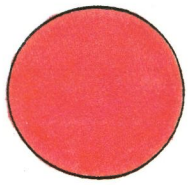

red

ted

pin

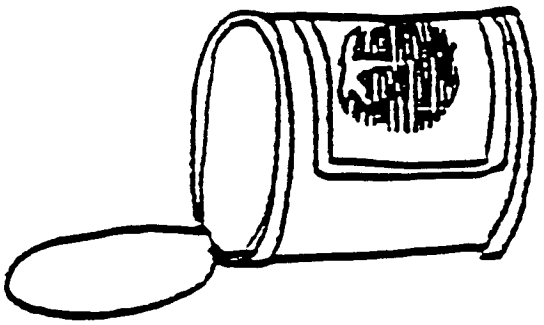

tin

sat

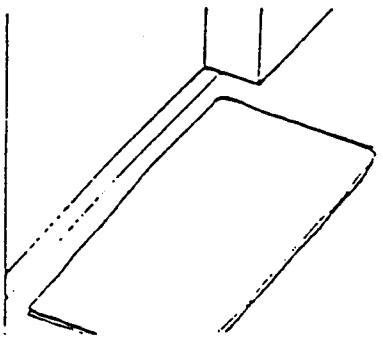

mat

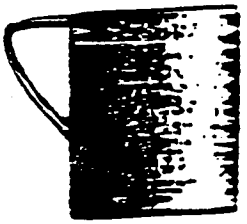

mug

bug

ran

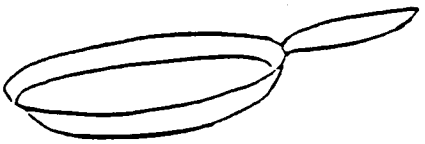

pan

Appendix C: Illustrations for the Rhyme Test (Reduced 10%)

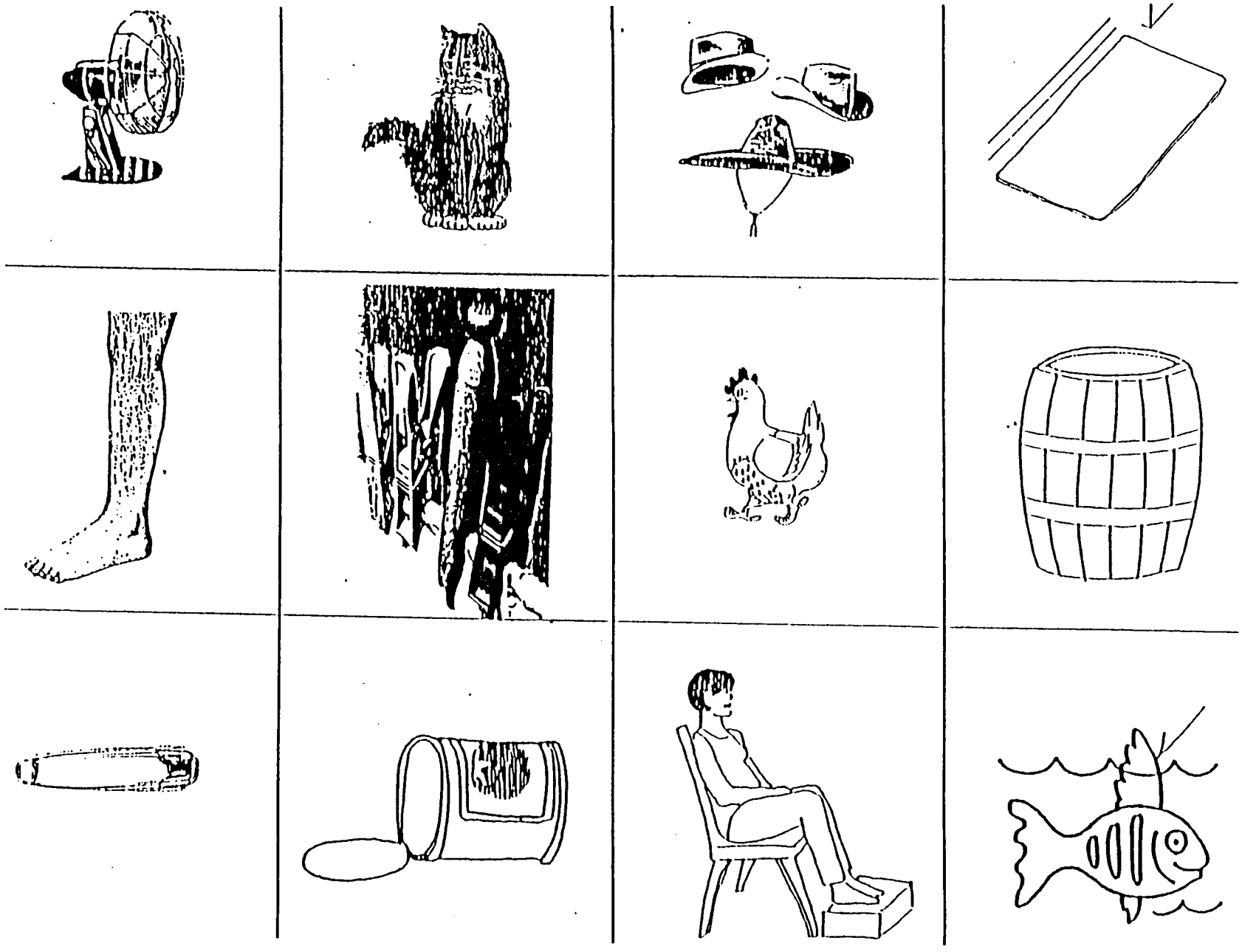

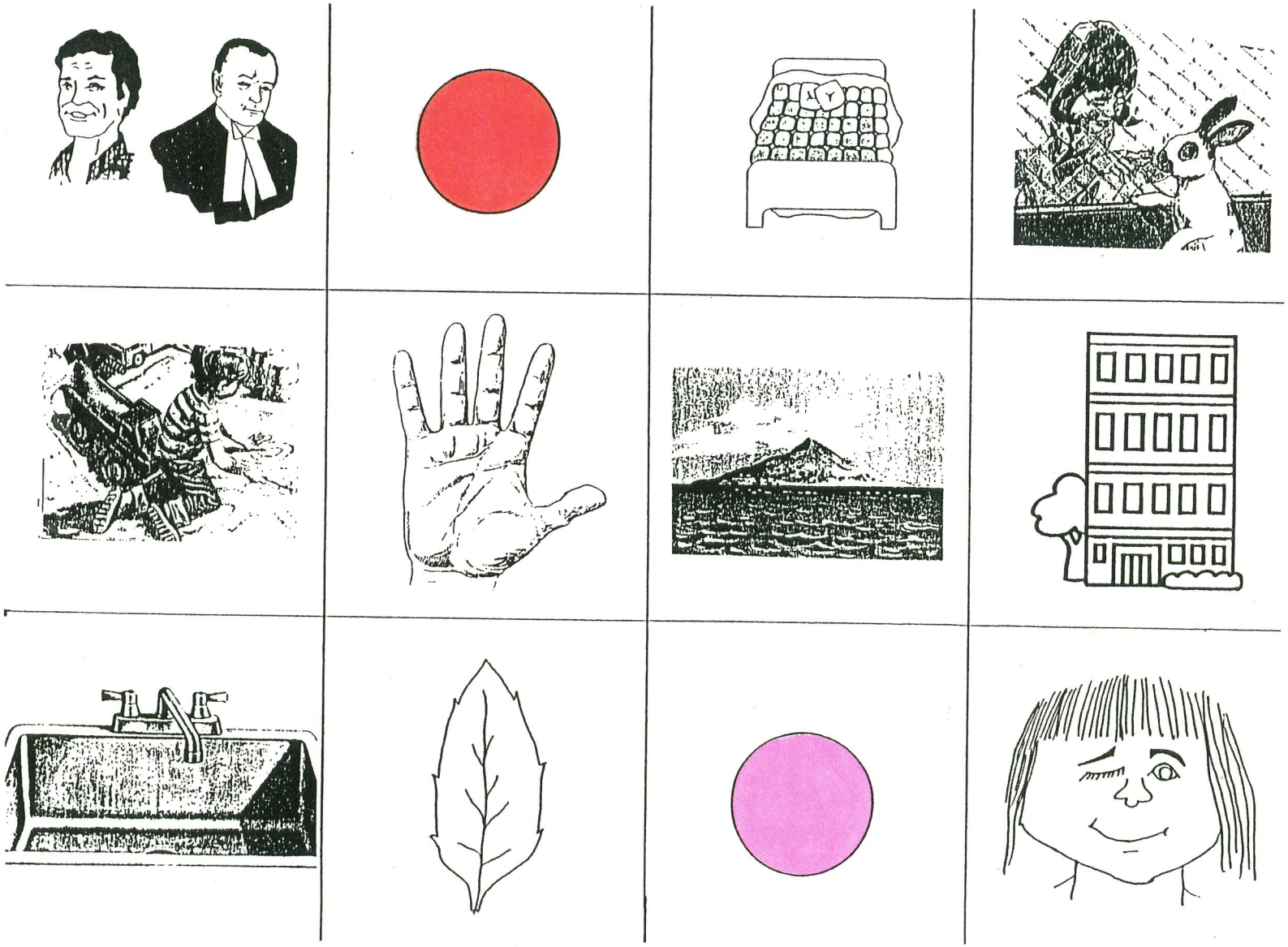

Appendix D: Examination of Mathematical Assumptions

H	TEST	ASSUMPTIONS	EXAMINATION	TENABLE?	COMMENTS
1	Depend. t-test	1. Normality	Histogram	No	- t-test robust - conservative for skewness - scores transformed with no change in results
		2. Random Sampling		Yes	
		3. Pop. var. unknown		Yes	
2abc	POC	1. Planned Contrasts		Yes	
		2. Orthogonal Contrasts		Yes	
2a	Indep. t-test	1. Normality	Histogram	Yes	- small n
		2. Homogen. Variances	Levene F	Yes	
		3. Independent Observations		Yes	
2b	Indep. t-test	1. Normality	Histogram	Yes	- small n
		2. Homogen. Variances	Levene F	Yes	
		3. Independent Observations		Yes	

H	TEST	ASSUMPTIONS	EXAMINATION	TENABLE?	COMMENTS
2c Hi.	Indep. t-test	1. Normality	Histogram	Yes	- small n
		2. Homogen. Variances	Levene F	Yes	
		3. Independent Observations		Yes	
2c Low	Indep. t-test	1. Normality	Histogram	No	- t-test robust - conservative for skewness - scores transformed with no change in results
		2. Homogen. Variances	Levene F	No	- robust if $n_1 = n_2$
		3. Independent Observations		Yes	
3	Indep. t-test	1. Normality	Histogram	No	- Low group positively skewed - t-test robust - conservative for skewness
		2. Homogen. Variances	Levene F	No	- robust if $n_1 = n_2$
		3. Independent Observations		Yes	

H	TEST	ASSUMPTIONS	EXAMINATION	TENABLE?	COMMENTS
2b	ANCOVA	1.Independence		Yes	
		2.Normality	- Resid. Plots	Yes	- robust when sample sizes are equal and error df > 20
		3.Homogen. Variances	- F Max	Yes	
		4.Linearity			
		a)Cov. & DV	- Resid. Plots	Yes	
			- Cov. by Y Plots	Yes	- except for Rhyme in SA
		b)Among IV's	- Cov. Scatterplts	Yes	
		5.Homogen. Slopes	- Cov.by Treat Int.	Yes	
			- F BMDPV1	Yes	

H	TEST	ASSUMPTIONS	EXAMINATION	TENABLE?	COMMENTS
4	Trials to Criterion				
	MR	1.Independence		Yes	
		2.Normality	- Resid. Plot	Yes	
			- Norm. P. Plot	Yes	
		3.Homoscedas.	- Resid. Plot	Yes	
		4.Linearity	- Resid. Plot	Yes	
4	Analogy Word Reading				
	MR	1.Independence		Yes	
		2.Normality	- Resid. Plot	Yes	
			- Norm. P. Plot	Yes	
		3.Homoscedas.	- Resid. Plot	Yes	
		4.Linearity	- Resid. Plot	Yes	

H	TEST	ASSUMPTIONS	EXAMINATION	TENABLE?	COMMENTS
Final Phoneme	DA	1.Multiv. Normality	- No Test Available	?	- robust when df > 20, $n_1 = n_2$, 2-tailed
		2.Outliers	- Multiv. Mahalan.	None	
			- Univar. Res. z	Two	- following Tabachnick retained unless also multivariate
		3.Homogen. Var/Cov	- Canonical Plot	Yes	- equality of plot for each group, tenable - robust when samples equal or large, > 20
		4.Linearity	- Predictor Scatterplots	Yes	- violation reduces power, not Type I increase
		5.Multicol. Singul.	- BMDP7M Protects	Yes	

Appendix E: Testing For Homogeneity of Slopes

The dependent variable was analogy word reading and the covariates were letter-sound knowledge, phoneme identity, and rhyming ability. Failure of the homogeneity of slopes assumption would be indicated by a statistically significant interaction between treatment group membership and a covariate. As none of these interactions were significant, the ANCOVA assumption for homogeneity of slopes is plausible and the analysis proceeded.

Summary ANCOVA Table

Source	SS	DF	MS	F	p
Treatment	6.02	2	3.01	1.50	.23
Letter-sound	9.71	1	9.71	4.83	.03
Phoneme id.	39.09	1	39.09	19.46	.00
Rhyme	.001	1	.001	.001	.98
Treat*Letter	2.88	2	1.44	1.39	.26
Treat*Phoneme	5.58	2	2.79	.72	.49
Treat*Rhyme	6.66	2	3.33	1.66	.20
Error	108.48	54	2.01		

Note. $R^2 = .71$.