C.1

DESIGN STUDY FOR THIRD HARMONIC FLAT-TOPPING OF THE TRIUMF 520 MeV CYCLOTRON

by

DAVID GEORGE MICHELSON

B.A.Sc, The University of British Columbia, 1982

A THESIS SUBMITTED IN PARTIAL FULFILLMENT OF THE REQUIREMENTS FOR THE DEGREE OF MASTER OF APPLIED SCIENCE

in

THE FACULTY OF GRADUATE STUDIES

Department of Electrical Engineering

We accept this thesis as conforming to the required standard

THE UNIVERSITY OF BRITISH COLUMBIA

January 1986

© David George Michelson, 1986

In presenting this thesis in partial fulfillment of the requirements for an advanced degree at the University of British Columbia, I agree that the library shall make it freely available for reference and study. I further agree that permission for extensive copying of this thesis for scholarly purposes may be granted by the head of my department or by his or her representatives. It is understood that copying or publication of this thesis for financial gain shall not be allowed without my written permission.

David G MICHELSON

Department of Electrical Engineering

The University of British Columbia
1956 Main Mall
Vancouver, British Columbia, Canada
V6T 1Y3

31 January 1986

Abstract

The accelerating voltage in the 520 MeV/200 uA H- cyclotron at TRIUMF is developed in a resonant cavity and consequently has a sinusoidal time dependence. It is possible to "flat-top" the accelerating voltage waveform by superimposing a third harmonic waveform of the appropriate relative amplitude and phase on the fundamental waveform. This increases the phase acceptance of the cyclotron by reducing the spread in energy gain per turn normally associated with the spread in phase of the ion beam with respect to the peak of the RF waveform. Slight adjustments to the shape of the waveform can introduce longitudinal bunching mechanisms which tend to compensate for several second order effects that normally limit the cyclotron's performance during high current or high energy resolution modes of operation.

The relative simplicity of TRIUMF's dee geometry suggests that both the fundamental and third harmonic modes could be excited in the same rather than in separate accelerator RF cavities. Implementing such a system will require the development of new cavity coupling and tuning mechanisms for the existing radio frequency cavity and a new radio frequency control system.

Because access to the cyclotron is severely restricted by scheduled beam production and high residual radioactivity in the cyclotron vacuum tank, a test cavity built from

components identical to those used in the cyclotron RF cavity was adapted for initial development and testing of third harmonic cavity tuning and control systems at operational dee voltages (100 kilovolts at 23 MHz, 11 kilovolts at 69 MHz) and under hard vacuum (10^{-7} Torr).

This thesis describes:

a. the scope and technical objectives of the third harmonic flat-topping project at TRIUMF including required improvements to the fundamental RF system;

b. the design and initial development of cavity tuning and coupling mechanisms for the RF test cavity;

c. the demonstration of a flat-topped accelerating voltage in the test cavity at operational voltage levels while under vacuum; and,

d. the design and initial development of a prototype version of the new radio frequency control system.

The results obtained show that under realistic conditions of vacuum and RF input power, it is possible to simultaneously excite the fundamental and third harmonic modes in an RF cavity with mechanical construction and operational characteristics similar to those of the cyclotron RF cavity.

TABLE OF CONTENTS

LIST OF TABLES

LIST OF FIGURES

LIST OF SYMBOLS

Symbols are defined as follows unless otherwise noted:

β	=	v/c where v is the velocity of the mass and c is the velocity of light
γ	=	$1/\sqrt{1 - \beta^2}$
ω_o	=	the ion rotation or cyclotron resonance frequency
	=	the resonant frequency of a circuit or structure
ω	=	the frequency of the RF accelerating voltage, also referred to as the <u>driven</u> or <u>system</u> frequency
r	=	the radius of a position within the cyclotron magnetic field
θ	=	the azimuth of a position within the cyclotron magnetic field
$B_z(r,\theta)$	=	the vertical component of the cyclotron magnetic field as a function of radius and azimuth
$\langle B_z(r)\rangle$	=	the average value of the vertical component of the cyclotron magnetic field as a function of radius
ε	=	the cyclotron magnet spiral angle
	=	V_1/V_3
	=	permittivity of a dielectric
m	=	mass
	=	mass of an electron, 9.11×10^{-31} kg
m_o	=	rest mass of a proton, 1.67×10^{-27} kg
q	=	electric charge
e	=	the electronic charge, 1.602×10^{-19} C
$\Delta\phi$	=	the longitudinal phase length of an ion beam packet measured in radio frequency degrees
ΔR	=	the radial width of an ion beam packet

$q\ V_{acc}$ = the energy gained by the ion beam during a single pass through the dee gap

dE/dn = the energy gained by the ion beam during a single turn

N = the total number of turns completed by the ion beam

n = the turn number or turn index

E_T = the total energy gained by the ion beam after N turns

E_{max} = the maximum energy that the ion beam could gain after N turns

ΔE = $E_{max} - E_T$

V_{dee} = the RF voltage measured from the tip of the dee to the dee liner - the dee voltage

V_{acc} = the potential that the ion beam falls through during a single pass through the dee gap - the accelerating voltage

V_1 = the amplitude of the fundamental component of the accelerating voltage

ϕ = the phase of the fundamental component of the accelerating voltage relative to the passage of the ion beam through the dee gap

V_3 = the amplitude of the third harmonic component of the accelerating voltage

δ = the phase of the third harmonic component of the accelerating voltage relative to the fundamental component

ℓ = the distance from the cavity to a shorting plane to a given point

τ = the total volume of the RF cavity

$\Delta\tau$ = the volume of the RF cavity displaced by the cavity tuning mechanism

C = capacitance

= the cavity tuning factor: $\Delta\omega/\omega = C\ \Delta\tau/\tau$

Acknowledgement

Many people at TRIUMF and the Department of Electrical Engineering made completion of this thesis an interesting and rewarding activity. In particular, I wish to thank my thesis supervisors:

Dr. E.V. Jull	-	Professor, Department of Electrical Engineering, UBC
Dr. Gerardo Dutto	-	Head, Cyclotron Division
Dr. D.A. Dohan	-	Leader, Cyclotron Development Group
Mr. R.E. Worsham	-	Leader, RF Systems Group
Dr. T.A. Enegren	-	RF Systems Engineer
Dr. Luc Durieu	-	Control Systems Engineer, CERN (SPS Division)
	-	on temporary leave to TRIUMF 1983-84

and many other members of the TRIUMF staff, including Dr. K.S.K. Fong, Dr. J.V. Pacak, Mr. R. Burge, Mr. M.M. Mouat, and Mr. E. Knape of the Cyclotron Development Group, Mr. R. Poirier, Mr. N. Carlson, Mr. A. Mannes, Mr. B. Chow, Mr. R. Shanks, and Mr. H.B. Whiteside of the RF Systems Group, Mr. R.E. Laxdal of the Accelerator Research Division, Mr. P. Bennett and Mr. B. Evans of the Technology and Administration Division. Their interest in and support of my thesis activities were freely and generously given, despite their demanding duties and responsibilities elsewhere. Dr. Durieu, in particular, provided me with tremendous support during his sixteen month stay at TRIUMF and deserves special mention.

The assistance of Miss Angela Choi, Mr. Ward Cartier, and the TRIUMF Drawing Office in the preparation of many of the figures in this thesis is most appreciated.

Financial support from the National Research Council of Canada, through TRIUMF, during the course of my studies is gratefully acknowledged.

"If there is one thing that experience teaches us, it is that however well conceived the design of the r.f. system initially is, various problems will manifest themselves when it is required to perform... The best that one can hope for is that the r.f. system will not self destruct on first turn on!"

J. Riedel
"R.F. Systems"
IEEE Trans NS-26(2) p 2135
(April 1979)

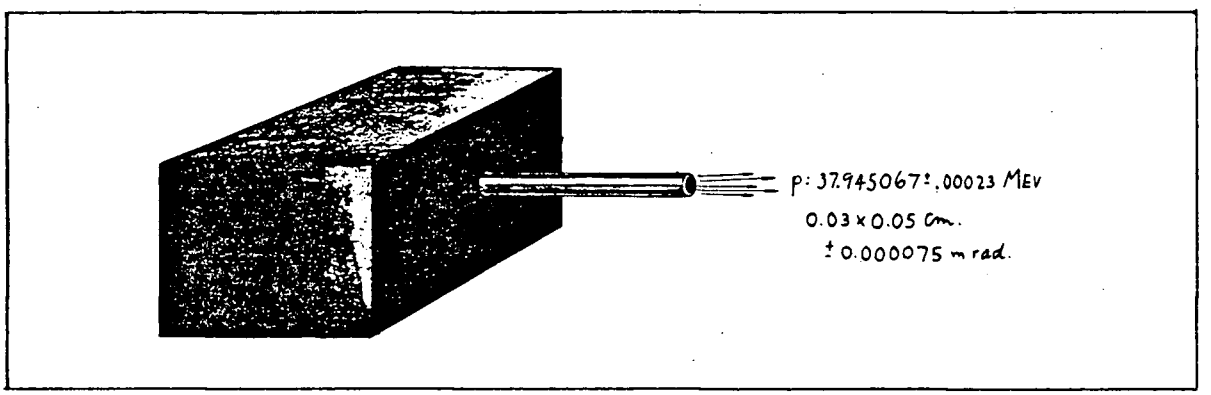

THE CYCLOTRON AS SEEN BY THE EXPERIMENTAL PHYSICIST

Drawing by Ron MacKenzie

One of a well-known series of drawings
first presented at the
International Conference on Isochronous Cyclotrons,
Gatlinburg, Tennessee (2-5 May 1966)

CHAPTER 1

INTRODUCTION

1.1 A METHOD FOR IMPROVING THE OPERATING CHARACTERISTICS OF ISOCHRONOUS CYCLOTRONS

1.1.1 General

In particle accelerators, the accelerating fields are often developed within resonant cavities and consequently have a sinusoidal time dependence. In accelerators such as synchrocyclotrons and synchrotrons that rely on Veksler and MacMillan's "principle of phase stability" [1] [2] for proper operation, the sinusoidal shape of the accelerating voltage waveform is close to the optimum shape. In the case of isochronous cyclotrons, however, the optimum shape more closely resembles a square wave.

With the addition of a third harmonic component of the appropriate relative amplitude and phase, it would be possible to modify the shape of the accelerating voltage in the TRIUMF 520 MeV cyclotron so that:

- the spread in energy normally associated with the spread in phase of the ion beam with respect to the midpoint of the RF cycle would be reduced. This would increase the cyclotron's phase acceptance, reduce the effective radial width of the ion beam, and would therefore increase the effective separation between adjacent turns during acceleration; and,

• second order effects, such as longitudinal space charge forces in the ion beam (a source of difficulty when large beam currents are accelerated) and deviations from isochronism in the main magnet's phase history, would be compensated for by various mechanisms which would tend to longitudinally bunch the ion beam.

These improvements would make it easier to extract:

• intermediate energy proton beams with high energy resolution for precise experiments in nuclear physics;

• intermediate energy proton beams with high current densities for copious production of secondary beams of mesons and other particles; or,

• single turns of negative hydrogen ions either for injection by charge exchange into a post accelerator such as the TRIUMF KAON factory or for production of neutral hydrogen beams for applied research.

"Flat-topping" the accelerating voltage waveform in TRIUMF requires that a second radio frequency system operating at the third harmonic of the main RF system be designed and installed. This thesis is concerned with:

• the tolerances on the shape and stability of the accelerating voltage waveform required by these beam production objectives;

• demonstration of new tuning and coupling mechanisms for the TRIUMF cyclotron's RF cavity; and,

• initial development of a new RF control system for the TRIUMF cyclotron.

1.1.2 Historical Notes

Some of the advantages of flat-topping the accelerating voltage in isochronous cyclotrons were recognized as early as 1939 by G.B. Rossi who was later (1957) awarded a patent [3] for a possible method of implementing such a system in a classical cyclotron (see fig. 1.1). There are references in the literature to early work by Goodman [4] of Oak Ridge National Laboratory in 1959 but the work was apparently assigned a rather low priority [5] and only a mock-up of a flat-topped cyclotron RF system was constructed.

The first detailed proposals to build flat-topped isochronous cyclotrons appeared in the late 1960's, apparently following M.M. Gordon's suggestion [6] that it might be desirable to design the Separated Orbit Cyclotron [7], essentially a spiral linac operating at a low RF frequency, as a "separated turn isochronous cyclotron". He suggested that flat-topping could play a major role in improving the extraction efficiency of cyclotrons that are used to accelerate high current ion beams to intermediate energies (such as the meson factories then being designed) by increasing the effective separation between adjacent turns at the extraction radius. Gordon's paper [6] and a subsequent publication [8] extolled the virtues of flat-topping but addressed only the beam dynamics issues. Gordon [8] concluded that,

"Despite the difficulties outlined in the preceding paragraphs, the potential advantages of the voltage flat-topping technique are sufficiently attractive to justify the effort required to successfully implement this technique."

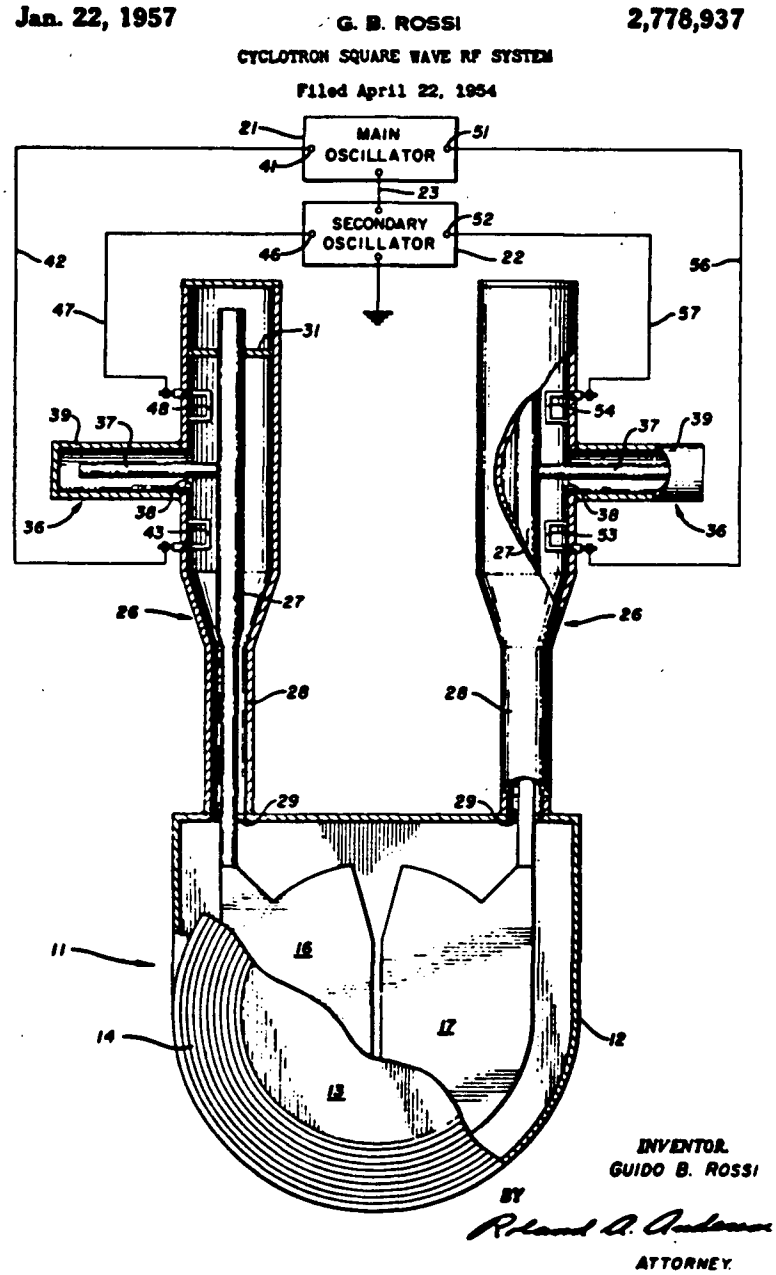

Fig. 1.1 Rossi's Cyclotron Square Wave RF System

The proceedings of the Fifth International Cyclotron Conference (1969) record six proposals [9] - [14] to build cyclotrons with flat-topped accelerating voltages. The increased phase acceptance gained by flat-topping was particularly attractive for heavy ion accelerators [10] [11] since the heavy ion sources that were available at that time were rather weak. Most of the proposals dealt with cyclotrons intended to deliver ion beams with very fine energy resolution [12] - [14], referred to by some writers as "spectrometric" or "monoenergetic" cyclotrons [12] [13].

H.G. Blosser [15] addressed the issue of flat-topping at the next cyclotron conference in 1972 in an invited paper concerning the application of new techniques and technologies to future cyclotrons. He lamented that,

"In spite of ... early efforts and in spite of a number of obvious advantages of flat-topping, no operating cyclotron has yet utilized such a system."

Although many cyclotron facilities [9] - [18] have indicated their interest in flat-topping, including:

a. IUCF, the Indiana University Cyclotron Facility [16];

b. GANIL, the French National Heavy Ion Laboratory near Caen [17]; and,

c. TRIUMF [9];

as of 1985, only the 590 MeV ring cyclotron [18] [19] and its 72 MeV injector II cyclotron [20] at the Swiss Institute for Nuclear Research (SIN) have been successfully "flat-topped".

The first discussions of flat-topping the accelerating voltage waveform in the TRIUMF cyclotron were presented in 1969 in Richardson and Craddock's [21] [22] analysis of the achievable energy resolution from the cyclotron, and Erdman's (et al) [9] description of plans for development of a "square wave" RF system. Urgent priorities elsewhere shifted attention away from third harmonic flat-topping during the 1970's, however. Developments at TRIUMF during the past five years (see section 1.4) have renewed interest in third harmonic flat-topping and have led to the current design and development effort.

1.2 SOME PRINCIPLES OF CYCLOTRON OPERATION

The cyclotron was the first, and is perhaps the best known, of the so-called "circular accelerators" used to impart high velocities to stable charged particles for use in nuclear and particle physics research. It is a magnetic resonance accelerator [23] [24] in which a static magnetic field is used to:

a. steer the ions being accelerated into circular orbits; and,

b. provide vertical focusing to keep the ion beam in the median plane (and away from the walls of the vacuum tank and other structures).

The electric field which accelerates the ion beam is developed across the dee gap (accelerating gap) by the cyclotron's radio frequency system. In modern cyclotrons, this potential drop is usually a few hundred thousand volts.

The RF system frequency is synchronized to the ion rotation period so that the accelerating voltage peaks when the ion beam passes through the accelerating gap. In cyclotrons, the ion beam passes through at least two (and perhaps several) accelerating gaps during each orbit.

Modern cyclotron RF systems include the following components:

a. a master oscillator - an RF signal source with low phase noise and very good frequency stability, e.g. a crystal-controlled frequency synthesizer;

b. a radio frequency power amplifier (or transmitter) that boosts the signal from the master oscillator from less than a watt to the few hundred to few million watts necessary to excite the desired accelerating voltage in the RF cavity;

c. a transmission line and matching section - used to transfer RF power from the power amplifier to the cavity coupling element;

d. one or more RF cavities (also referred to as accelerating cavities, resonators, or dee structures), complete with coupling element and tuning mechanism, that support the accelerating voltage between the "dees"; and,

e. a feedback control loop and associated control structures that stabilize the amplitude and often, but not always, the phase of the accelerating voltage.

The cyclotron resonance, which is the fundamental principle of cyclotron operation, was discovered by Ernest O. Lawrence [25] in 1929. Since then, cyclotrons have evolved into a family of accelerators (see Table I) that include:

a. the first generation "classical" or fixed frequency cyclotrons whose maximum energy is limited to a few tens of MeV by the relativistic increase in the mass of high energy ions and the consequent loss of cyclotron resonance;

b. the second generation synchrocyclotrons (or frequency-modulated cyclotrons), the first circular accelerators to accelerate particles past the relativistic mass increase barrier (to several hundred MeV) by taking advantage of the principle of phase stability [1] [2] but with a very low macro duty cycle, hence beam intensity; and,

c. the third and fourth generation sector-focused isochronous cyclotrons [26], originally proposed by L.H. Thomas in the late 1930's and "rediscovered" in the 1950's, that permit ions to be accelerated to relativistic energies with a 100 percent macro duty cycle by steering them into isochronous orbits but at the expense of requiring a relatively complicated main magnet design with an azimuthally varying field.

TABLE I

FOUR GENERATIONS OF CYCLOTRONS

1930 to the present

Generation	Type	Construction	Comments
First	Classical or Non-relativistic (NR)	1930-1950's	obsolete
Second	Frequency modulated or 'Synchro' cyclotrons	1945-1950's	11 still in operation world-wide
Third	Sector-focused (General Purpose)	1950-present	final energy < 70 MeV
Fourth	Sector-focused (Special Purpose)	1960-1970's	e.g. TRIUMF and SIN
	Sector-focused (Super-conducting)	1980's-present	heavy ion acceleration or acceleration to high energies (multi-GeV)

The beam orbits in isochronous cyclotrons are different from those in other circular accelerators, such as synchrotrons, in two ways:

a. The orbital radius **increases** as the velocity and kinetic energy of the ions increase; and,

b. The orbital (or "ion rotation") period is the **same** for ions of all energies, i.e. the orbits are isochronous.

As a result of the last property, isochronous cyclotrons can accept beam packets for acceleration while other packets are still in the process of being accelerated. This "pipelined" acceleration of many ion beam packets simultaneously gives cyclotrons a unique capability: No other circular accelerator can accelerate ion beams with a 100 percent macro duty cycle.

Since the early 1960's, the nuclear and particle physics communities have identified and pursued four major design objectives for isochronous cyclotrons:

a. simplicity - for use in medical or industrial applications;

b. versatility - for acceleration of heavy ions;

c. excellent beam properties - for precise experiments in nuclear physics; and,

d. higher energies and intensities - for copious production of secondary particles.

Pursuit of the fourth objective led to the design and construction of the two most powerful cyclotrons ever built:

a. the 520 MeV / 200 uA H- spiral-sector cyclotron at TRIUMF, located on the University of British Columbia campus in Vancouver; and,

b. the 590 MeV / 600 uA H+ ring cyclotron at the Swiss Institute for Nuclear Research (SIN) near Zurich.

Although there are over one hundred operating cyclotrons world-wide in 1985, most operate on a relatively small scale. A substantial fraction are primarily used to produce radioisotopes or neutron beams for use in medical, industrial, or scientific applications. Many are used to accelerate heavy ions for use in both pure and applied research. Only three cyclotrons (SIN - 590 MeV, TRIUMF - 520 MeV, and IUCF - 215 MeV) can accelerate protons beyond about 90 MeV, however. Although IUCF resembles its lower energy brethren in many ways, the mammoth accelerators at TRIUMF and SIN are in a class of their own in terms of both scale and complexity compared to the majority of the world's cyclotrons.

TRIUMF and SIN are often referred to as "meson factories". During full energy and maximum intensity operation, their primary proton beams are directed at special water-cooled "production targets". The highly energetic primary proton beam interacts with the nucleons in the production target and gives up some of its energy in the form of secondary beams of pi-mesons (pions) and their decay products, mu-mesons (muons), that are hundreds of times more

intense than are available at most other accelerator facilities. A third meson factory, which is based on an 800 MeV proton linear accelerator, is located at Los Alamos National Laboratory in New Mexico.

1.3 THE TRIUMF 520 MeV CYCLOTRON

TRIUMF's 520 MeV cyclotron has provided experimental physicists with intermediate energy proton beams since late 1974 [27] for use in:

a. studies of nucleon-nucleon interactions at intermediate energies (i.e. between 200 MeV and 500 MeV);

b. the production of secondary beams of pions, muons, fast neutrons, and thermal neutrons for use in both pure and applied research; and,

c. the production of radioisotopes.

Injection, acceleration, and extraction of the ion beam from the TRIUMF 520 MeV cyclotron are depicted in fig. 1.2. Although highly simplified, the sketch clearly illustrates the basic operation of the cyclotron and many of its important features including:

a. axial injection of the ion beam at a relatively high energy (300 keV) from an external ion source;

b. the geometry of the dees; and,

c. extraction by electronic stripping.

The TRIUMF 520 MeV cyclotron and plans for its development have been described in a number of recent

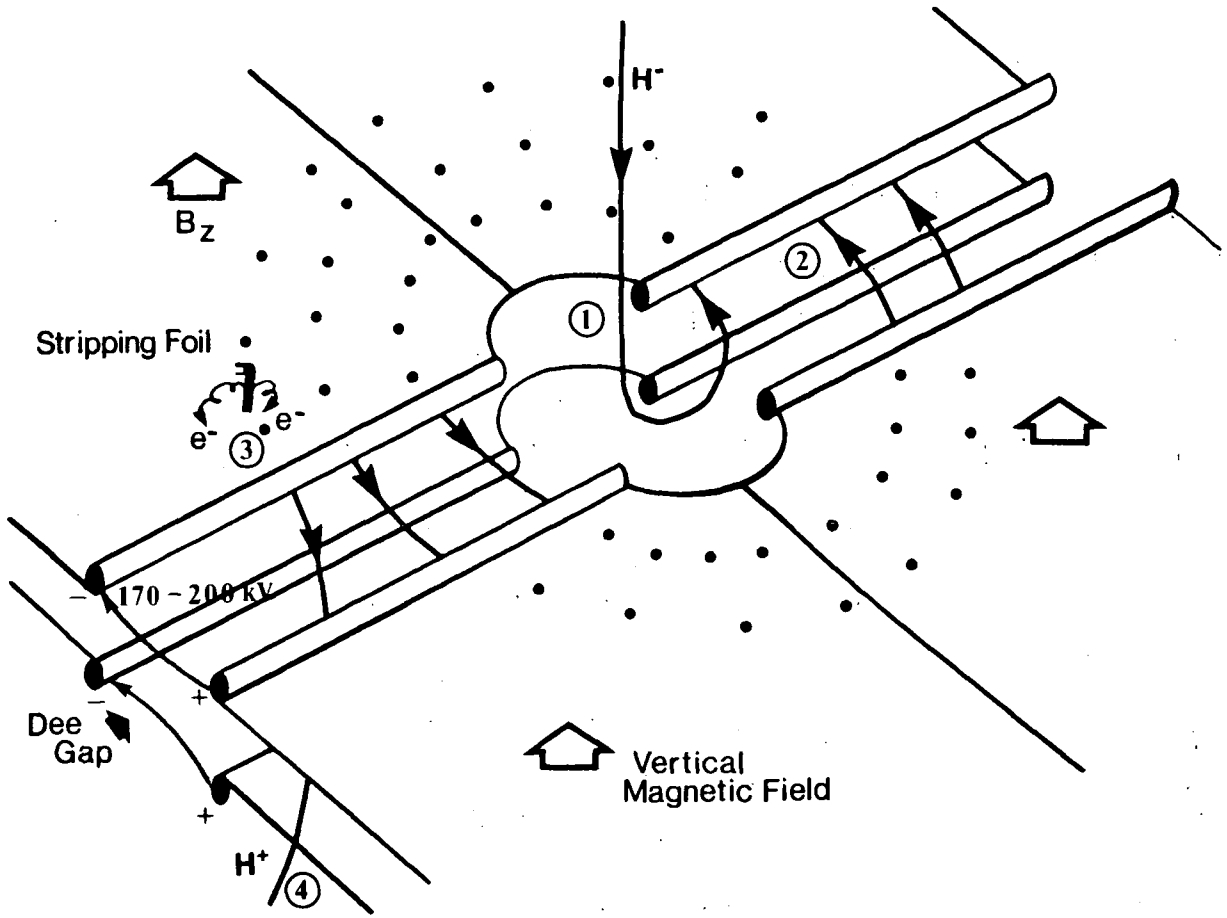

Fig. 1.2 TRIUMF Cyclotron - Injection, Acceleration, and Extraction of the Ion Beam

This highly simplified sketch shows the H^- ion beam during (1) axial injection at 300 keV, (2) acceleration through the dee gap, (3) electronic stripping, and (4) extraction from the cyclotron. Certain details of the stripping and extraction sequence have been altered for sake of illustration - see fig. 2.9

reports and publications such as the Report to the NRC Review Committee on TRIUMF [28], the tutorial paper concerning KAON Factory studies by Mackenzie [29] and, a report on the status of TRIUMF by Baartman et al [30]. An artist's conception of the cyclotron is presented in fig. 1.3. Selected internal beam characteristics and cyclotron design parameters are presented in Table II. For reference, a brief description of the cyclotron and the facility is presented in Appendix A.

The TRIUMF cyclotron incorporates several fundamental improvements to the classical cyclotron concept:

1. An azimuthally-varying main magnetic field is used to provide both:

   a. the radial increase of the mean flux density of the main magnetic field that is required to compensate for the relativistic increase in the mass of high energy particles:

$$\langle B_z(r)\rangle = \frac{\gamma\,\omega_o\,m_o}{q} \quad ; \text{ and,}$$

   b. vertical focusing of the ion beam as required for successful acceleration of beam through many orbits.

2. The acceleration of negative (rather than positive) ions permits:

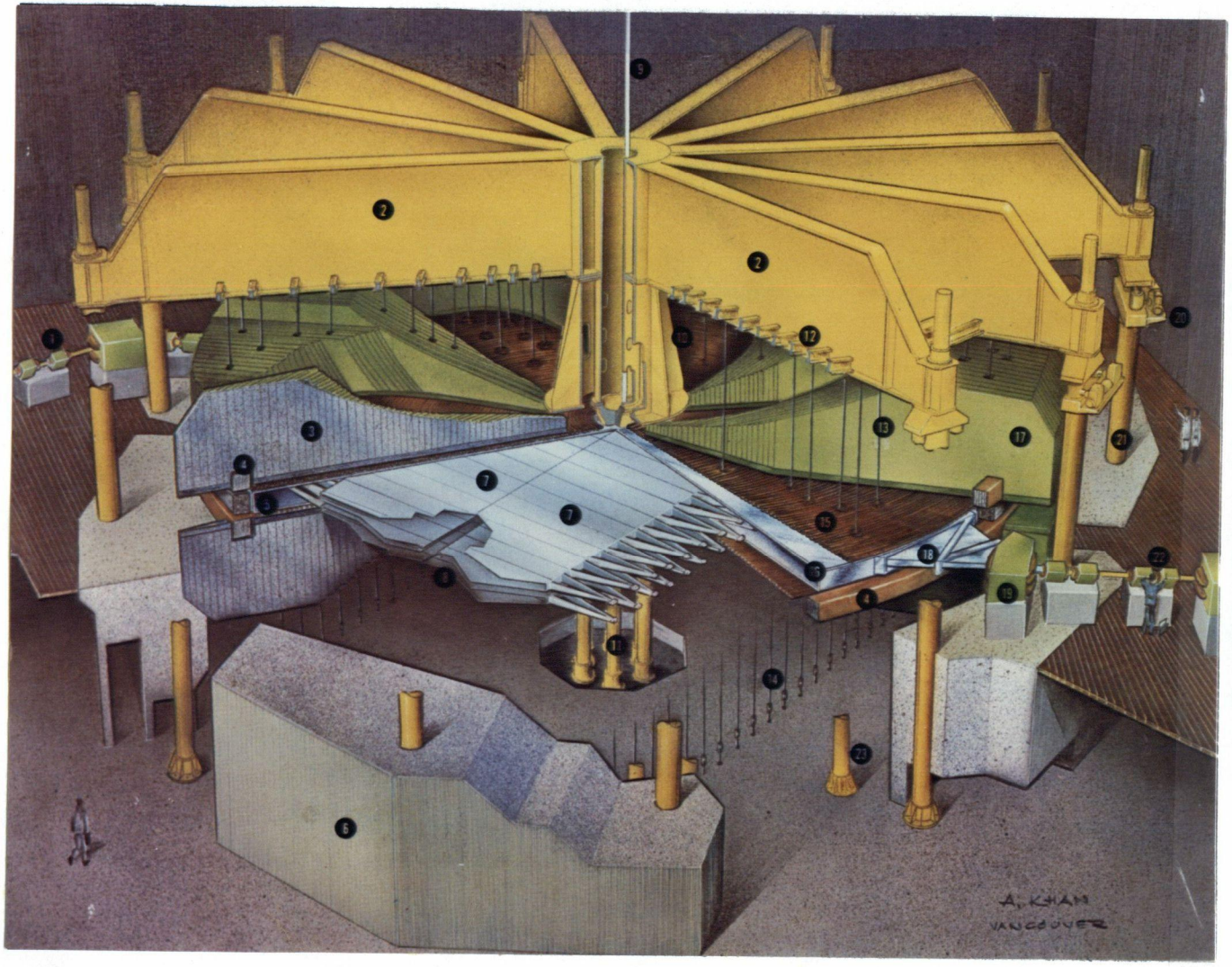

Key to Figure:

1 Beam line 4 -- Proton Hall
2 Primary Support Structure
3 Magnet Sector Number 6
4 Main Magnet Excitation Coils
5 Graphite Shielding Ring
6 Concrete Shielding
7 RADIO FREQUENCY CAVITY - Resonator Segments
8 ACCELERATING GAP or DEE GAP
9 Beam line from Ion Source
10 Upper Centre Structure
11 Lower Centre Supports
12 Secondary Support Structure
13 Upper Tie Rods
14 Lower Tie Rods
15 Magnet Trim Coils
16 Vacuum Tank
17 Magnet Sector Number 2
18 Beam Exit Port
19 Combination Magnet
20 Elevating Jack
21 Support Column
22 Beam line 1 -- Meson Hall
23 Magnet Support

Fig. 1.3 TRIUMF Cyclotron - Artist's Conception

Table II - Internal Beam Characteristics and Cyclotron Design Parameters

Property	Aim	Achieved
Energy range	165-500 MeV	183-520 MeV
Current (unpolarized)	100 μA (500 MeV)	200 μA (500 MeV)
	400 μA (450 MeV)	10-20 μA (average scheduled current)
Current (polarized)	60 nA	250 nA
Polarization (reversible)	80%	70%
Split ratio (Line 4/Line 1)	1/1 to 1/2000	1/1 to 1/10,000 (±25%)
Duty factor - maximum	(11%	11% (5 nsec/43 nsec)
	(20% (3rd harmonic)	no
- minimum	(1% (slits)	4% (chopped)
Transmission (5-500 MeV)	86%	85%
Fraction of dc beam to 500 MeV	10%	10%
		50% (1st and 2nd harmonic bunchers on)
Vertical centering	±6 mm	±4 mm
Isochronism (sin Ø)	±0.02	±0.4
Energy spread (10% peak)	1.8 MeV	2.0 MeV
	0.5 MeV (slits)	0.4 MeV (slits)
	0.1 MeV (3rd harmonic)	no
Radial emittance (90% beam)	3 π mm-mrad	5 π mm-mrad
Vertical emittance - internal	1.2 π mm-mrad	5 π mm-mrad
(90% beam) - external	2.4 π mm-mrad	3 π mm-mrad
Spot size at BL1AT2	2 x 10 mm^2	3 x 14 mm^2

Cyclotron Design Parameters	Design Value	Achieved
Dee voltage	100 kV peak	85 kV
Energy gain per turn	400 keV	340 keV
Voltage stability	± 2.5 parts in 10^5	± 1 part in 10^4
RF frequency (nominal)	23.05 MHz 5th harmonic of ion rotation frequency	
Frequency stability	± 7.5 parts in 10^8	yes
RF cavity tuning range	± 4 kHz	yes
RF cavity quality factor	greater than 6000	yes
Power dissipated at 100 kilovolt	1.2 MW	yes
Maximum anticipated beam load	300 kW	50 kW
Magnetic stability	3 ppm	0.7 ppm

a. the ion beam to be extracted by electronic stripping rather than electrostatic deflection); and,

b. the simultaneous extraction of ion beams whose energies and intensities are easily and independently varied.

3. An external ion source and injection system is used to:

a. reduce contamination of the vacuum in the cyclotron by ion source emissions; and,

b. permit the use of special polarized and high intensity ion sources.

Design and installation of a third harmonic radio frequency system will be the fourth fundamental improvement to the classical cyclotron concept applied to TRIUMF.

1.4 UPGRADING TRIUMF'S RADIO FREQUENCY SYSTEM

The third harmonic flat-topping project is part of a larger program to upgrade the TRIUMF cyclotron's radio frequency system. Under the terms of the RF Resonator Replacement Program [31], major structural improvements will be made to the RF cavity. Those features required by the third harmonic RF system will be incorporated into the new design. At the same time, the cyclotron's RF control system is being redesigned to improve the amplitude and phase stability of the accelerating voltage. Provision for controlling the third harmonic RF system will be built into the new control system.

A number of recent developments at TRIUMF will benefit greatly from the improved operating characteristics that third harmonic flat-topping can offer:

Higher Beam Current

a. development of high intensity ion sources (polarized and unpolarized) at TRIUMF [32] [33];

b. the recent upgrade to Beamline 1A's beam dump, the Thermal Neutron Facility, which increased its capacity from 50 kilowatts of beam power (corresponding to approximately 170 microamperes of beam current) to 125 kilowatts (corresponding to approximately 400 microamperes of beam current) [30];

c. plans to use the 520 MeV cyclotron as the injector for the recently proposed ISOL (Isotope Separation On Line) radioactive beam accelerator;

Higher Energy Resolution

d. proposals for development of a high resolution spectrometer for nucleon-nucleon interaction studies [34];

Acceleration in Separated Turns

e. recent success at raising the short term stability of the main magnetic field to 0.7 parts per million (from 5 parts per million) by Reiniger, Dohan, and Baumann [35] and development of very high resolution NMR probes for raising the long term stability of the field to similar levels by

Dohan, Burge, and Dennison [36] which together with flat-topping will satisfy the key requirements for accelerating the ion beam in separated turns near the extraction radius [37];

f. efforts directed towards developing a mechanism for extracting negative hydrogen ions (instead of protons) from the cyclotron [38];

g. plans to use the 520 MeV cyclotron as the injector for the TRIUMF KAON Factory [29] [39] [40], a fast-cycling synchrotron post-accelerator which will boost a 100 - microampere proton beam from 450 million electron volts (MeV) to nearly 30 billion electron volts (GeV).

1.5 THESIS OUTLINE

The purpose of this thesis project is to demonstrate the feasibility of incorporating provision for operation with a flat-topped accelerating voltage into the TRIUMF RF system by demonstrating:

a. a flat-topped accelerating voltage in a test cavity that is mechanically similar to the cyclotron RF cavity; and,

b. the operation of a prototype version of the new RF control system.

The importance of the shape of the accelerating voltage waveform, its amplitude and phase stability, and its radial distribution in determining the characteristics of the accelerated ion beam are described in chapter two.

Development of third harmonic cavity tuning and coupling mechanisms and a demonstration of third harmonic flat-topping of the accelerating voltage in the TRIUMF radio frequency test facility at operational voltage levels (100 kV - fundamental, 11 kV - third harmonic) while under vacuum are described in chapter three.

The initial specification and development of a new radio frequency control system to:

a. step the RF system through the start-up procedure;
b. keep the RF cavity tuned to both the fundamental and third harmonic driving frequencies;
c. regulate the amplitude and phase of the fundamental (23 MHz) and third harmonic (69 MHz) accelerating modes; and,
d. ensure that the RF system operates in a safe and reliable manner with either a fundamental or a flat-topped accelerating voltage;

are described in chapter four.

The major points of the thesis and the results obtained during this study are summarized in chapter five.

Four appendices are attached. A brief description of the 520 MeV cyclotron and the TRIUMF meson facility is

presented in Appendix A. The scope and technical objectives of the third harmonic flat-topping project including required improvements to the fundamental RF system are described in Appendix B. Techniques for calculating or measuring the properties of loop-coupled RF cavities, including use of an RF network analyzer to measure cavity coupling and quality factors, are outlined in Appendix C. The nature of the problems that are often encountered during the operation of accelerator RF systems, such as drifts in the resonant frequency of the accelerator RF cavity with temperature, sparking, and multipactoring or resonant secondary electron emission are reviewed in Appendix D.

References:

[1] E. Persico, E. Ferrari, and S.E. Segre. "Principles of Particle Accelerators." New York: W.A. Benjamin, Inc. pp 18-24 (1968).

[2] J.J. Livingood. "Principles of Cyclic Particle Accelerators." Princeton: D. Van Nostrand Co. Inc. pp 76-101 (1961).

[3] G.B. Rossi. "Cyclotron Square Wave RF System." U.S. Patent No. 2,778,937 dated 22 January 1957.

[4] C.D. Goodman. Oak Ridge National Laboratory Report ORNL-2403 (1957).

[5] R.E. Worsham, TRIUMF. Private communication (1984).

[6] M.M. Gordon. "Design Considerations for a Separated Turn Isochronous Cyclotron." *Nucl Inst Meth* 58:245-252 (1968).

[7] J.A. Martin. "The Separated Orbit Cyclotron." *IEEE Trans* NS-13(4):288-292 (1966).

[8] M.M. Gordon. "Improving the Energy Resolution and Duty Factor of Isochronous Cyclotrons." *Particle Accelerators* 2:203-209 (1971).

[9] K.L. Erdman, A. Prochazka, O.K. Fredriksson, R. Thomas, and W.A. Grundman. "A Square-Wave RF System Design for TRIUMF." *Proc 5th Int Cyclotron Conf,* pp 105-110 (1969).

[10] T.K. Khoe, J.J. Livingood, and W.J. Ramler. "Proposed Midwest Tandem Cyclotron." *Proc 5th Int Cyclotron Conf,* pp 30-40 (1969).

[11] J.A. Martin, E.D. Hudson, S.W. Mosko, L.N. Howell, and M.L. Mallory. "A Heavy-Ion Accelerator Facility Featuring a Separated Sector Isochronous Cyclotron." *Proc 5th Int Cyclotron Conf,* pp 41-49 (1969).

[12] I. Ya. Barit, G.A. Vasilyev, V.N. Kanunnikov, L.N. Katsaurov, A.A. Kolomensky, E.M. Moroz, L.N. Netchaeva, A.P. Fataev, Yu. K. Khokhlov, I.V. Shtranikh, Yu. G. Basargin, O.A. Gusev, R.N. Litunovsky, I.F. Malishev, O.A. Minyaev, and M.P. Svinyin. "Spectrometric Isochronous Cyclotron." *Proc 5th Int Cyclotron Conf,* pp 375-379 (1969).

[13] V.P. Dmitrievsky, V.V. Kolga, and N.I. Polumordvinova. "Peculiarities of Charged Particle Motion in the Monoenergetic Cyclotron." *Proc 5th Int Cyclotron Conf,* pp 370-374 (1969).

[14] M.E. Rickey, M.B. Sampson, and B.M. Bardin. "The Indiana University 200 MeV Cyclotron Project." *Proc 5th Int Cyclotron Conf,* pp 24-29 (1969).

[15] H.G. Blosser. "Future Cyclotrons." *Proc 6th Int Cyclotron Conf,* pp 16-32 (1972).

[16] M.E. Rickey, M.B. Sampson, and B.M. Bardin. "General Design Features of the Indiana University 200 MeV Cyclotron." *IEEE Trans* NS-16(3):397-404 (December 1968).

[17] C. Bieth, A. Joubert, G, Rastoix, J. Riedel. "The Ganil Accelerating System." *Proc 7th Int Conf on Cyclotrons and their Applications,* pp 163-166 (1975).

[18] B. Bischof. "The RF-System of the Flattop-Acceleration Structure in the SIN 590-MeV-Ring-Cyclotron." *IEEE Trans* NS-26(2):2186-2189 (April 1979).

[19] S. Adam, W. Joho, P. Lanz, H. Leber, N. Schmid, U. Schryber. "First Operation of a Flat-top Accelerating System in an Isochronous Cyclotron." *IEEE Trans* NS-28(3):2721-2723 (June 1981).

[20] W. Joho, S. Adam, B. Berkes, T. Blumer, M. Humbell, G. Irminger, P. Lanz, C. Markovits, A. Mezger, M. Olivo, L. Rezzonico, U. Schryber, P. Sigg. "Commissioning of the New High Intensity 72 MeV Injector II for the SIN Ring Cyclotron." *IEEE Trans* NS-32(5):2666-2668 (October 1985).

[21] J.R. Richardson. "Energy Resolution in a 500 MeV H- Cyclotron." TRIUMF Report TRI-69-6 (June 1969).

[22] J.R. Richardson and M.K. Craddock. "Beam Quality and Expected Energy Resolution from the TRIUMF Cyclotron." *Proc 5th Int Cyclotron Conf*, pp 85-94 (1969).

[23] E. Persico, E. Ferrari, and S.E. Segre. "Principles of Particle Accelerators." New York: W.A. Benjamin, Inc. pp 11-14, 160-177 (1968).

[24] J.J. Livingood. "Principles of Cyclic Particle Accelerators." Princeton: D. Van Nostrand Co. Inc. pp 7-11, 102-153 (1961).

[25] E.O. Lawrence and N.F. Edlefsen. "On the Production of High Speed Protons." *Science* 72:376-377 (1930).

[26] J.R. Richardson. "Sector-Focusing Cyclotrons." *Progr Nucl Tech Instr* 1:57-158 (1965).

[27] J.R. Richardson, E.W. Blackmore, G. Dutto, C.J. Kost, G.H. MacKenzie, and M.K. Craddock. "Production of Simultaneous Variable Energy Beams from the TRIUMF Cyclotron." *IEEE Trans* NS-22(3):1402-1407 (June 1975).

[28] E.W. Vogt, ed. "Report to the NRC Committee on TRIUMF." (April 1983).

[29] G.H. Mackenzie. "Studies for a TRIUMF KAON Factory." INS KIKUCHI Winter School on Accelerators for Nuclear Physics, 29 Jan - 2 Feb 1984.

[30] R. Baartman, E.W. Blackmore, J. Carey, D. Dohan, G. Dutto, D. Gurd, R.E. Laxdal, G.H. Mackenzie, D. Pearce, R. Poirier, and P.W. Schmor. "Status Report on the TRIUMF Cyclotron." *Proc 10th Int Conf on Cyclotrons and their Applications*, pp 203-206 (1984).

[31] TRIUMF Facility Development Plan. "RF Resonator Replacement Program." (12 July 1984).

[32] P.W. Schmor, R. Baartman, J.W. Carey, D. Dohan, G. Dutto, and G.H. Mackenzie. "Progress Towards Higher Intensities and Improved Beam Stability at TRIUMF." *IEEE Trans* NS-30(4):2092-2095 (August 1983).

[33] P. Schmor. "High Intensity Sources of Polarized Protons." *IEEE Trans* NS-32(5):1713-1717 (1985).

[34] J.M. Cameron, P. Kitching, and D.A. Hutcheon, ed. "Prospects for High Resolution Studies with A Proton Beam Between Ep = 200-500 MeV." TRIUMF Report TRI-80-2 (October 1980).

[35] K. Reiniger, H. Baumann, D. Dohan, and D. Pearce. "Stability Improvements in the TRIUMF Cyclotron Magnetic Field to +/- 0.7 ppm." *J de Physique* 45(C1):225-228 (January 1984).

[36] R. Burge, D. Dohan, and G. Dennison. "Precision NMR Measurement of the TRIUMF Cyclotron Magnetic Field." *Proc 10th Int Conf on Cyclotrons and their Applications*, pp 82-84 (1984).

[37] E.W. Blackmore, D.A. Dohan, G.H. MacKenzie, and R. Poirier. "Developments Toward Separated Turns at TRIUMF." *Proc 9th Int Conf on Cyclotrons and their Applications*, pp 485-487 (1981).

[38] M. Zach, G. Dutto, R.E. Laxdal, G.H. Mackenzie, J.R. Richardson, R. Trelle, R.E. Worsham. "The H- High Intensity Beam Extraction System for TRIUMF." *IEEE Trans* NS-32(5):3042-3044 (1985).

[39] M.K. Craddock, R. Baartman, J. Beveridge, E.W. Blackmore, J.I.M. Botman, W. Cameron, J. Doornbos, T.A. Hodges, D.E. Lobb, G.H. Mackenzie, D. Raparia, P.A. Reeve, J.R. Richardson, G. Stinson, R.E. Worsham, W.K. Lacey, C.W. Planner, H.O. Schonauer, T. Suzuki, C. Yamaguchi. "The TRIUMF KAON Factory." *IEEE Trans* NS-32(5):1707-1709 (1985).

[40] E.W. Vogt, A. Astbury, M.K. Craddock, E.W. Blackmore, G.R. Ritchie, W.K. Lacey, ed. "KAON Factory Proposal." TRIUMF Meson Research Facility, Vancouver, Canada. (September 1985).

CHAPTER 2

MODIFICATION AND CONTROL OF THE ACCELERATING VOLTAGE WAVEFORM

2.1 INTRODUCTION

At present, cyclotron operators can "tune" the TRIUMF cyclotron to maximize beam transmission (the percentage of the beam that is successfully accelerated from injection to extraction), center the beam orbits, and improve the energy resolution, micro duty cycle and emittance of the extracted beam by:

- making fine adjustments to the "shape" of the cyclotron's magnetic field using the 54 circular trim and 78 (13 in each of 6 magnet sectors) harmonic coil pairs that are brazed to the top and bottom of the vacuum tank;
- minimizing the effects of misalignment of the central region dee segments with a set of electrostatic correction plates; and,
- rejecting undesirable components of the injected beam using a system of choppers, pulsers, defining slits and flags in the cyclotron's injection line and central region;

as described by Blackmore et al [1], Rawnsley, Mackenzie, and Oram [2], and others.

Although the primary function of the accelerating voltage developed by the cyclotron's radio frequency system is to impart kinetic energy to the ion beam, optimizing the shape of the accelerating voltage waveform and improving its

amplitude and phase stability play important roles in increasing the phase acceptance of the cyclotron, increasing the separation between adjacent turns during the acceleration process, and generally improving the emittance, micro duty cycle, and energy resolution of the extracted beam. A number of important second order effects that adversely affect the beam, including the effects of deviations from isochronism in the cyclotron's phase history, longitudinal space-charge effects during high current operation, and energy dispersion resulting from the spread in phase of ions with respect to the mid-point of the RF cycle, can be compensated for by suitably modifying the shape of the RF waveform. By providing cyclotron operators with control of the relative amplitude and phase of a supplementary third harmonic component of the accelerating voltage waveform, another important dimension is added to the process of tuning the cyclotron for optimum performance.

The optimum shape and minimum stability requirements for the accelerating voltage waveform are dependent on the cyclotron's operating mode:

a. high beam currents (200 - 400 uA) with low energy resolution (± 600 keV);

b. high energy resolution (± 50 KeV with low beam currents (10 - 20 nA); or, in the future,

c. single turn extraction of either protons or negative hydrogen ions at moderate (30 uA) to high (100 uA) beam currents.

Preliminary specifications for the shape of the accelerating voltage waveform, its amplitude and phase stability, and the acceptable (or desirable) variation of its amplitude with radial position along the accelerating gap are assembled (from various sources) in this chapter. In brief, high current operation will require the greatest third harmonic accelerating voltage (0.24 of the fundamental voltage) of the three operating modes while single turn extraction will require the highest amplitude and phase stability (± 80 ppm - fundamental amplitude, ± 0.12 degrees - third harmonic phase relative to the fundamental).

The stability specifications presented in this chapter are based on a highly simplified model of the acceleration process in the cyclotron. Because verification of such models by experiment is difficult, the results presented should be regarded as order of magnitude estimates only.

It should also be noted that the ease of tuning a cyclotron depends as much on the quality of the beam diagnostic probes available to cyclotron operators as it does on the number of parameters the operators can adjust. An early review (1966) of cyclotron beam development and diagnostic tools was presented by Clark [2]. A review of beam diagnostic equipment for intermediate energy cyclotrons was presented more recently (1975) by Olivo [3]. Problems with mechanical design, RF pick up, **"pressure to put the machine into operation quickly, or a shortage of funds"** [3]

have, at many facilities, resulted in diagnostic probes that fail to meet design expectations or operational requirements. Olivo noted that "**experience at many laboratories indicates that excellent diagnostic elements are a must to extract the best performance from the accelerator.**" Development of beam diagnostic equipment is an important and ongoing activity at TRIUMF, as described in Refs. [1], [2], and others.

2.1.1 The Accelerating Gap in the TRIUMF Cyclotron

During normal operation, the TRIUMF cyclotron supports a dee voltage of 85 kilovolts. In principle, each ion could gain 170 keV of kinetic energy every time the beam's spiral trajectory takes it through the dee gap, but in practice, deviations from isochronism combined with the sinusoidal shape of the accelerating voltage waveform have limited the average energy gain to approximately 135 keV as computed by comparing the final beam energy E_f with the beam's time of flight [5]: Dividing the beam's time of flight t_f by the ion rotation period T gives the number of turns N required to gain sufficient energy for extraction. Dividing the energy gained during acceleration $E_f - E_i$ by the number of turns N gives the average energy gain per turn $\langle dE/dn \rangle$.

$$\langle dE/dn \rangle = (E_f - E_i)\, T/t_f \tag{2.1}$$

$$\simeq 4\, q \langle V_{dee} \cos\phi \rangle \tag{2.2}$$

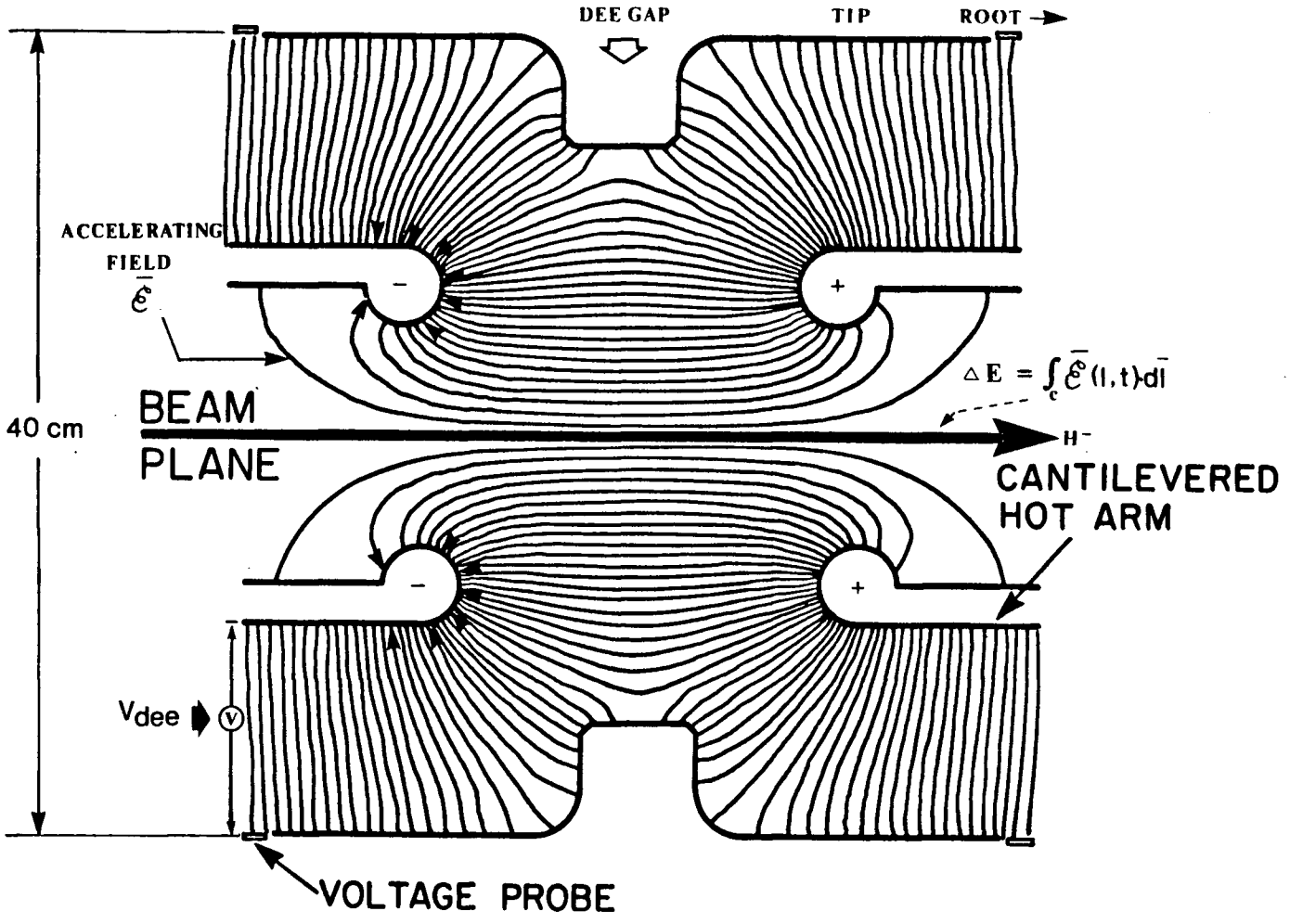

Fig. 2.1 TRIUMF Cyclotron - Cross-section Through Dee Gap

The line integral of the electric field encountered by the beam during its passage through the dee gap, multiplied by the ion's net electric charge, gives the energy gained $\Delta E = 1/2\ (dE/dn)$, as shown in fig. 2.1. This integral is the only exact measure of the energy gained by the ion beam, a quantity which must be highly regulated for production of high quality proton beams. Unfortunately, by its nature, it is very difficult to measure this value precisely, especially using a conventional capacitive voltage divider mounted near the dee gap, such as shown in fig. 2.1. This can make it very difficult to regulate ΔE to the required precision using feedback control (see section 4.4). The term "accelerating voltage" V_{acc} refers to the amplitude of the potential difference between opposite sides of the dee gap. Multiplying V_{acc} by the ion's net charge q gives the maximum possible energy gain per gap crossing. Multiplying this quantity by $\cos\phi$, where ϕ represents the phase difference between the peak of the RF waveform and the passage of the beam through the dee gap, gives an approximate measure of the energy actually gained by the ion beam. The term "dee voltage" V_{dee} refers to the amplitude of the potential difference between the tip of the dee (accelerating electrode) and the dee liner. These relationships are summarized below:

$$\frac{\Delta E}{q} = \int_c \bar{\mathcal{E}}(l,t) \cdot d\bar{l} \qquad (2.3)$$

$$= \frac{1}{2q} \frac{dE}{dn} \tag{2.4}$$

$$\simeq V_{acc} \cos\phi \tag{2.5}$$

$$\simeq 2 \; V_{dee} \cos\phi \tag{2.6}$$

where: $\bar{\mathcal{E}}$ represents the electric field encountered by the beam; and,

c is the trajectory taken by the ion beam through the dee gap;

2.1.2 Stages During Acceleration of the Ion Beam

For the purposes of developing numerical models of the acceleration process, it is convenient to divide the process into three stages as suggested by fig. 2.2:

a. Ion Source and Injection System: $0 < E < 300$ keV;

b. Cyclotron Central Region: 300 keV $< E <$ ~ 3 MeV;

c. Cyclotron: ~3 MeV $< E <$ 450 to 520 MeV;

The H^- beam is accelerated electrostatically from 0 to 300 keV in the ion source and injection system. The net charge accepted for acceleration by the cyclotron is increased by the high efficiency longitudinal bunching system in the injection line that was described by Baartman, Dutto, and Schmor [6].

The phase acceptance and internal beam quality of a cyclotron are determined primarily in its central region where the ions are injected and begin acceleration. Numerical studies by Craddock, Louis, and Reiser [7] and subsequent refinement by Dutto, Kost, Mackenzie, and

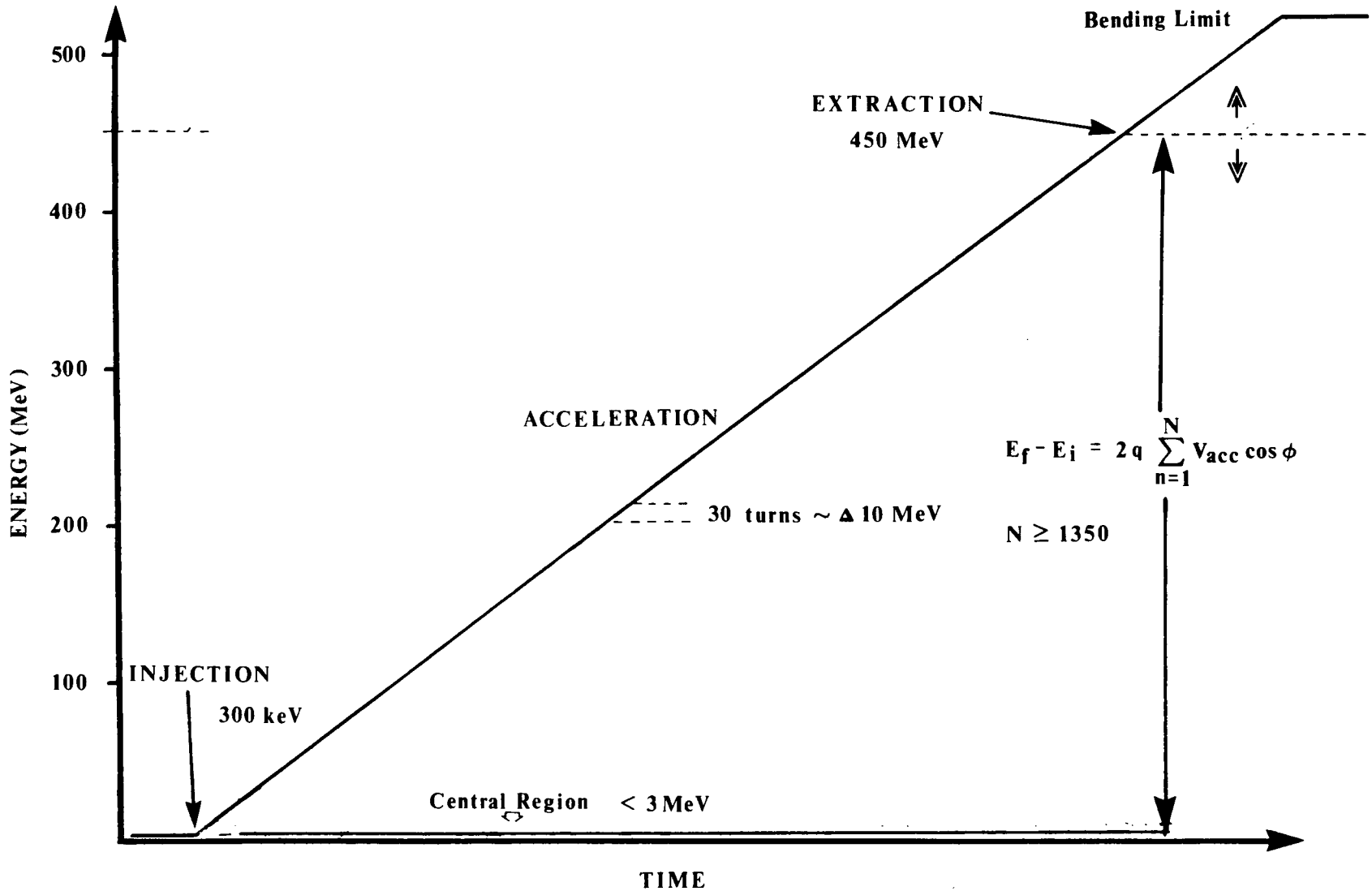

Fig. 2.2 Energy Gained by the Ion Beam During the Acceleration Process

Craddock [8] have shown that the phase acceptance of the cyclotron is substantially improved when the accelerating voltage waveform is flat-topped (see section 2.2.4).

The central region is usually defined as the region where electric forces in the dee gap play a greater role in affecting the axial motion of the ion beam than the cyclotron's magnetic field does. The central region design problems imposed by space-charge effects, by the phase dependence of the strong electrical forces, and of orbit centering, are well known.

Because the ion beam passes out of the central region after only 10 to 15 of the 1500 to 1800 turns required for the ion beam to acquire at least 450 MeV of energy, it is possible to neglect the special characteristics of the central region in the simplified model of acceleration in the cyclotron that is described in section 2.3. The model is used to estimate the tolerances on the amplitude and phase stability of the accelerating voltage required to achieve separated turns at the extraction radius and some of the effects of a non-uniform third harmonic accelerating voltage profile along the accelerating gap.

2.2 THE SHAPE OF THE ACCELERATING VOLTAGE WAVEFORM

By increasing the magnitude of the accelerating voltage waveform, it is possible to:

a. increase the energy gain per turn dE/dn;

b. increase the radius gain per turn dR/dn and, therefore, increase the separation between adjacent turns;

c. decrease the time of flight t_f and therefore decrease the fraction of the beam lost to electromagnetic stripping and collisions with residual gas molecules.

By altering the shape of the accelerating voltage waveform [9], it is possible to compensate for the following second order effects:

a. energy dispersion in the beam packet and the consequent increase in the packet's effective radial width;

b. limitations on the amount of beam accepted by the cyclotron for acceleration imposed by the need for the ions to clear the cyclotron's structural centre post on the first turn and to be vertically accepted, and the requirements that ions must end up in orbits centered to 0.04 inches, and the radial-longitudinal coupling amplitude should be less than 0.01 inches [11];

c. longitudinal space charge effects in ion beams with high current densities; and,

d. deviations from isochronism in the main magnet's phase history.

2.2.1 Phase Acceptance

The new RF waveforms that can be synthesized by combining the fundamental and third harmonic waveforms are suggested by the traces presented in fig. 2.3. In fig. 2.3(a), the fundamental and third harmonic waveforms are combined 180 degrees out of phase. The effects of subtracting various amounts of third harmonic are shown. In fig. 2.3(b), the relative amplitude of the two components is fixed in the exact ratio of one to nine but the phase difference between third harmonic and fundamental is allowed to shift.

Of particular interest is the combination of the third harmonic and fundamental accelerating voltages out of phase in the approximate ratio of one to nine which gives a composite waveform that has a greater phase acceptance than does the fundamental alone. This is referred to as "flat-topping" the RF waveform [10].

Phase acceptance ($\Delta\phi$ in fig. 2.4) is the time interval, measured in radio frequency degrees, over which an ion may be accelerated without paying a specified penalty in reduced energy gain (Δ dE/dn) with respect to ions that are accelerated at the peak of the RF waveform. Flat-topping can improve the operating characteristics of a cyclotron by increasing the phase acceptance from:

$$|\phi| < \sqrt{\frac{2\,\Delta E}{E}} \qquad (2.7)$$

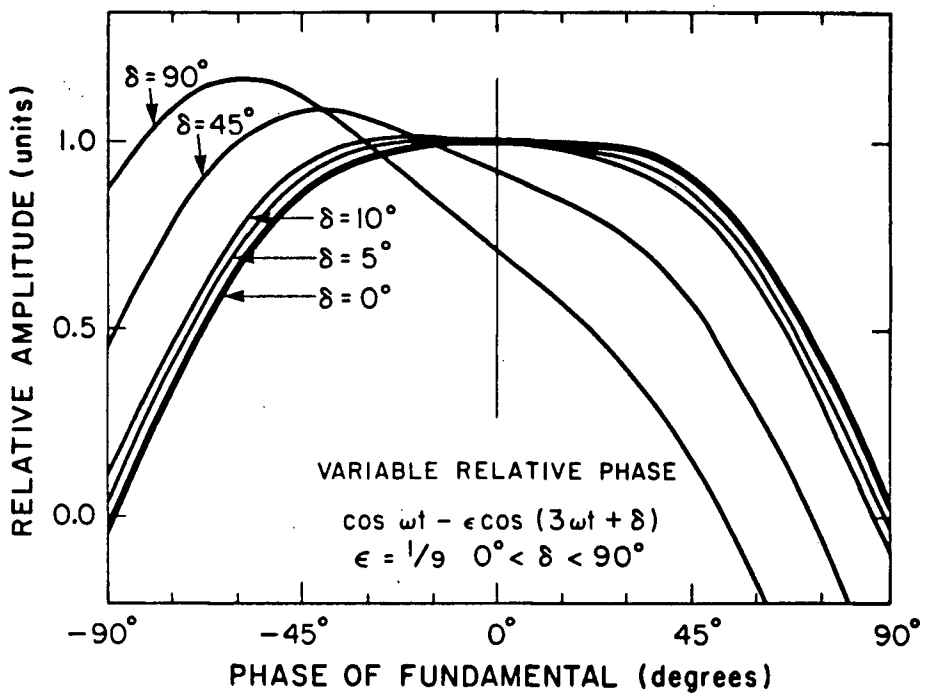

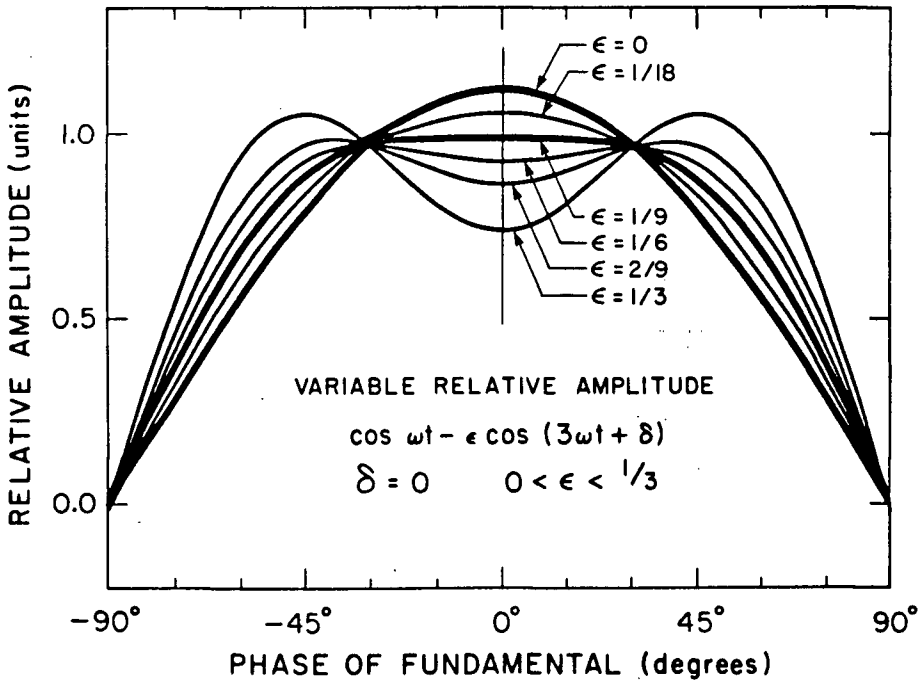

Fig. 2.3 Effects of a Third Harmonic Component on the Accelerating Voltage Waveform

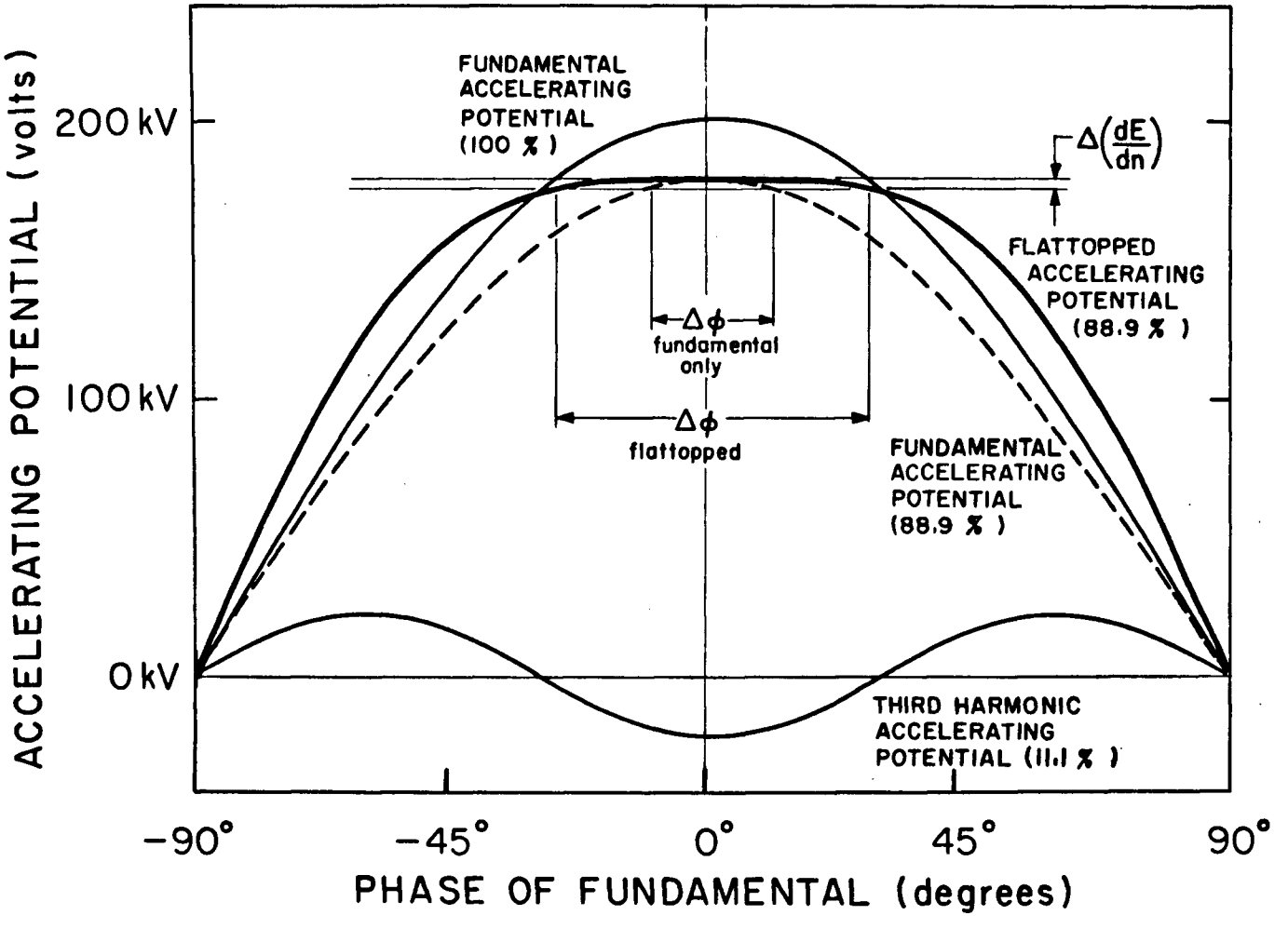

Fig. 2.4 Principle of Acceleration with a Flat-topped Accelerating Voltage Waveform

to

$$|\phi| < \sqrt[4]{\frac{24}{9}\frac{\Delta E}{E}} \tag{2.8}$$

Flat-topping reduces the energy dispersion (and the consequent spread in radius) of the ion beam as its components drift in phase with respect to the peak of the RF waveform. For example, if the allowable ΔE from the energy dispersion mechanism is 50 keV out of 500 MeV, then the phase acceptance is less than 0.81 degrees for a sinusoidal waveform but jumps to less than 7.32 degrees for a flat-topped waveform.

2.2.2 Phase Acceptance in the Central Region

The problems usually encountered in the design of the central region are alleviated in the TRIUMF cyclotron by three features:

a. injection at relatively high energy (300 keV) from an external ion source;

b. strong magnetic axial focusing; and, in the near future,

c. flat-topping the accelerating voltage waveform.

The expected phase acceptance for various selection criteria in both fundamental and high current RF modes are shown in fig. 2.5. Note that optimizing the RF waveform to produce a broad phase acceptance is quite different from the condition required for separated turn acceleration [11]. The optimum relative third harmonic amplitude and phase for the two

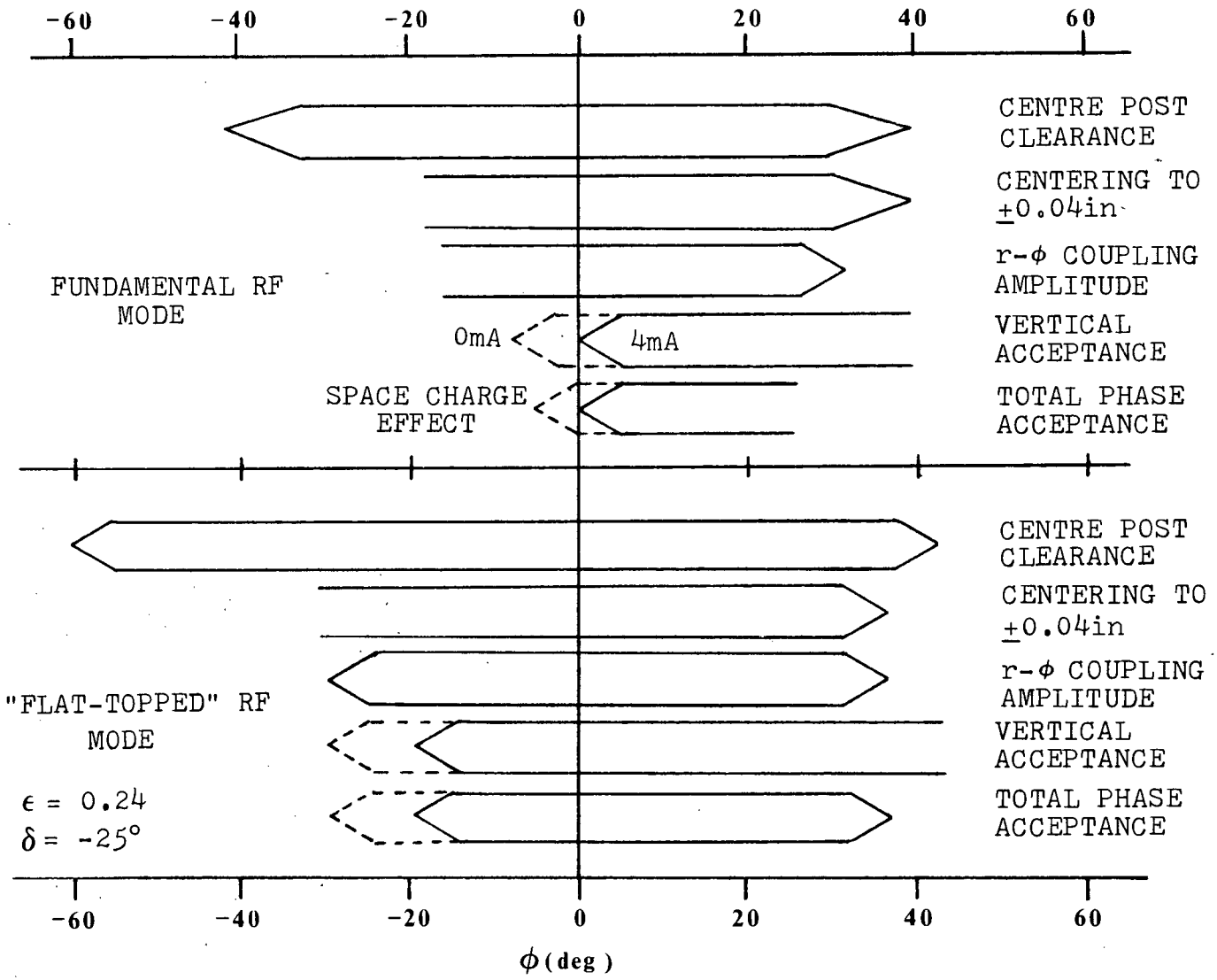

Fig. 2.5 Expected Phase Acceptance for Various Selection Criteria (after [11] p 138)

cases are given in equation (2.9).

$$V_{acc} = V_1 \, [\cos\phi - \epsilon \cos(3\phi + \delta)] \tag{2.9}$$

$\epsilon = 0.11, \quad \delta = 0$ degrees

for separated turn acceleration; and,

$\epsilon = 0.24, \quad \delta = -25$ degrees

for broad phase acceptance.

2.2.3 Minimizing The Effective Radial Width of the Ion Beam

The effective radial width of the ion beam is a function of three factors, as suggested by fig. 2.6:

a. the instantaneous size of the beam packet;

b. the radial drift of the centroid of the beam packet caused by drifts in the average energy gained per turn, i.e. fluctuations in the amplitude of the accelerating voltage; and,

c. distortion of the shape of the beam packet caused by the spread in phase of the ions with respect to the peak in the accelerating voltage and the consequent spread in energy and radial position.

A fourth factor, radial coherent (betatron) oscillations of the beam at the extraction radius, is made worse by the first harmonic component of the magnetic field and asymmetries in the accelerating voltage profile [12]. In practice, such problems are normally dealt with by centering the beam orbits and adjusting the main magnet's

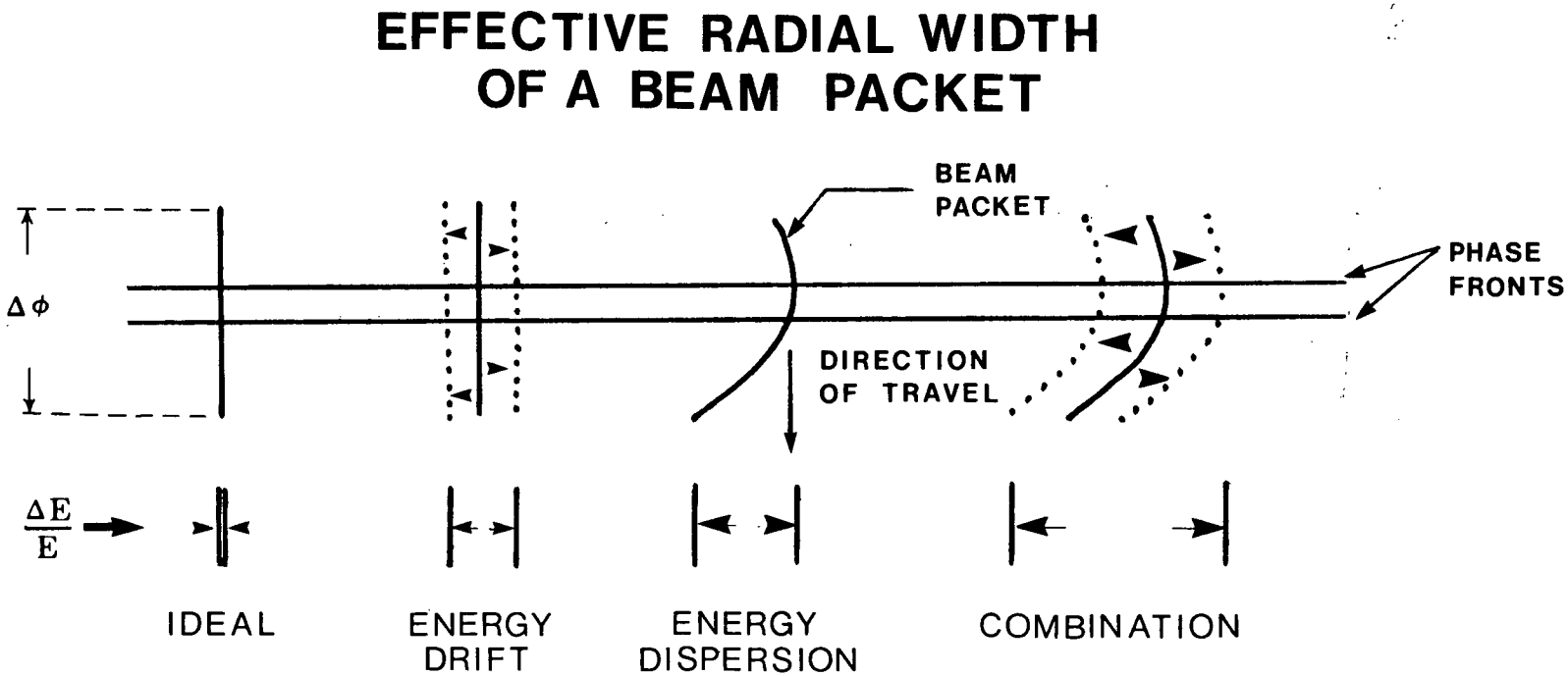

$\frac{\Delta E}{E}$ radial width

$\Delta\phi$ phase width

Fig. 2.6 Effect of Energy Drift and Energy Dispersion on the Effective Radial Width of a Beam Packet

harmonic correction coils and are not within the scope of this study.

Although addition of a third harmonic component to the RF waveform can, by increasing the phase acceptance of the cyclotron, reduce the increase in the effective radial width of the ion beam caused by energy dispersion, it cannot reduce the drift in energy, hence radial position, caused by fluctuations in the amplitude of the accelerating voltage. Thus, if the purpose of flat-topping the accelerating voltage is to reduce the effective width of the beam packet at the extraction radius to facilitate single turn extraction, it will be ineffective unless the amplitude of the accelerating voltage is sufficiently well regulated.

2.2.4 Minimizing the Effect of Longitudinal Space Charge Forces

When high beam currents are accelerated, perhaps a few hundred microamperes in the case of TRIUMF, longitudinal space charge forces can cause the effective phase width of the ion beam to increase which, in turn, tends to decrease the effective phase acceptance of the cyclotron. Ultimately this tends to destroy turn separation by increasing the energy spread within a turn. Welton [13], and later Muller and Mahrt [14], showed that this effect can be alleviated by accelerating the beam off the peak of the RF waveform or, in the case of a flat-topped waveform, by phase shifting the third harmonic component by a few degrees. M.M. Gordon [15] presented an extensive analysis of the longitudinal space

charge effect with formulas for calculating the resultant energy spread within a turn under certain conditions. More recent results have been reported by S. Adam [16]. Modification of the shape of the RF waveform to combat longitudinal space charge effects was investigated by W. Joho [17] in connection with isochronous storage rings. The validity of the concept has been confirmed by operational experience at SIN [18].

2.2.5 Phase History of the Magnetic Field

The phase history of TRIUMF's main magnet is of some concern since, as Blosser [19] noted, a flat-topped cyclotron must usually have a perfectly isochronous phase history. Unfortunately, after the first series of surveys of TRIUMF's magnetic field surveys were made in early 1973, it became obvious that there were unexpected differences between the magnetic properties of the steel used in the model magnet and the steel used in the main magnet. These differences caused large deviations from isochronism which were largely corrected during a year of very intensive magnet shimming. Craddock, Blackmore, Dutto, Kost, Mackenzie, and Schmor [20] reported that because of the limited time available to shim the main magnet, phase oscillations of up to $\pm$ 20 degrees were left near certain radii which greatly exceeds the $\pm$ 1.1 degree tolerance on deviations from isochronism specified by Richardson and Craddock [22].

Craddock et al [20] reported that numerical simulations have shown that by slightly "over flat-topping" the accelerating voltage so that two peaks on either side of zero degrees were created, it might be possible to minimize the effective radial width of the beam packet at the extraction radius without requiring that the main magnetic field have a perfectly isochronous phase history. It was reported that this technique is applicable to various phase oscillations including a linear phase ramp, a succession of alternating ramps with a common amplitude, and purely sinusoidal phase oscillations. Numerical simulations showed that for $\Delta\phi$ = 20 degrees, and with a flat-topped accelerating voltage of the form:

$$V_{acc} = V_1 \, [\cos\phi - \epsilon \cos(3\phi + \delta)] \tag{2.10}$$

values of ϵ = 0.120 and δ = 0.0 degrees would limit ΔE due to energy dispersion to less than 52 keV at extraction energies between 450 and 500 MeV.

2.2.6 RF Waveform Modification for Selected Modes of Operation

The traces in fig. 2.7 show seven RF waveforms optimized for selected modes of operation. In fig. 2.7(a), four basic waveforms suitable for accelerating small currents in a perfectly isochronous cyclotron are shown. At present, a 170 kV fundamental accelerating voltage is excited in the cyclotron. Installation of better cantilevered panel supports (strongbacks), better alignment

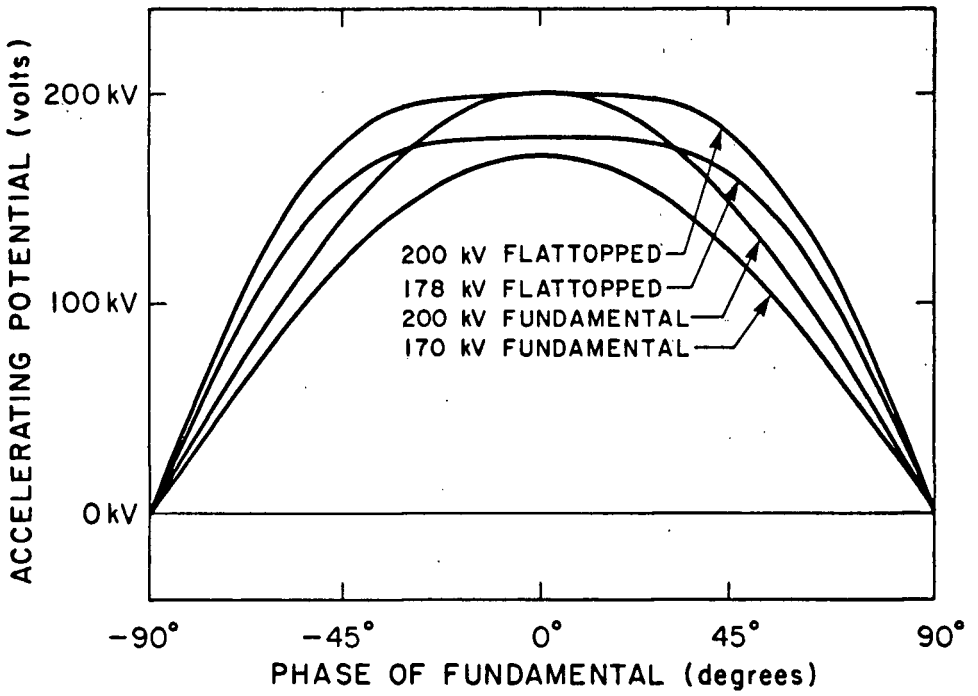

(a)

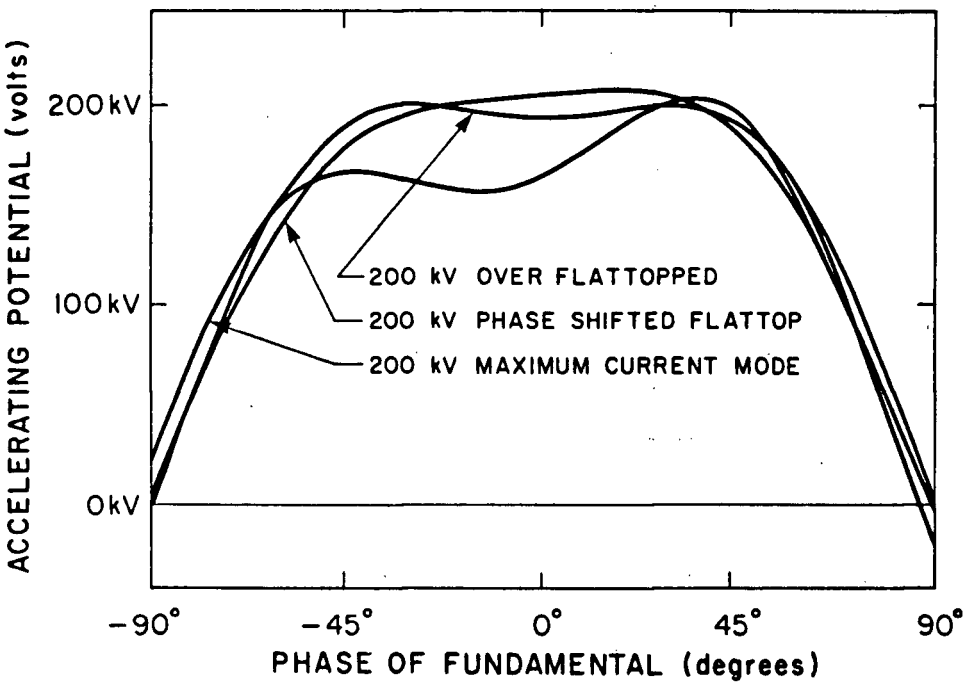

(b)

Fig. 2.7 RF Waveforms Optimized for Selected Modes of Operation

of the cantilevered panels, and better suppression of parasitic modes will permit the accelerating voltage to be raised to 200 kV fundamental. Installation of new cavity tuning mechanisms for fundamental and third harmonic and modification of the cyclotron central region and flux guides will permit excitation of a 22 kV third harmonic flat-topping voltage which will give a net 178 kV flat-topped accelerating voltage. A slight increase in power supplied to each mode will yield the design objective: a 200 kV flat-topped accelerating voltage.

In fig. 2.7(b), three waveforms suitable for accelerating medium to high current beams in a cyclotron with perhaps some deviations from isochronism in its phase history are shown. For maximum phase acceptance, a 205 kV fundamental accelerating voltage is combined with a 49.2 kV third harmonic voltage that is phase-shifted by -25 degrees. This scheme does not, however, provide maximum energy resolution. As mentioned above, Welton [13] showed that longitudinal space-charge effects in a maximum energy resolution mode of operation can be dealt with by introducing a very slight phase shift in the third harmonic voltage. Craddock et al [20] have suggested that flat-topping for maximum energy resolution can be implemented in a cyclotron with some deviations from isochronism in the phase history of its main magnet by adding slightly more third harmonic than is necessary to flat-top the waveform.

2.3 AMPLITUDE AND PHASE STABILITY OF THE ACCELERATING VOLTAGE WAVEFORM

2.3.1 Acceleration in Separated turns

If, at a particular radius, the effective radial width of the beam packet is less than the increment in radius it gained during the previous turn, adjacent beam packets appear distinct. There is a space between the packets within which there is no beam. When a packet of ions remains physically isolated from adjacent beam packets throughout its acceleration history and emerges as a pulse of ions with a spread in energy ΔE less than dE/dn, the beam is said to have been "accelerated in separated turns". Although separated turns are routinely observed at low radii or at low energies in cyclotrons, they are difficult to achieve at or near the maximum beam energy. Blackmore, Dohan, MacKenzie, and Poirier [5] have observed separated turns in TRIUMF out to 200 MeV,well short of the beam energy required for meson production or injection into a post accelerator.

If, however, the effective radial width of the beam is greater than the radial gain per turn, then the tails of the beam packet will merge and the beam packets will no longer appear physically distinct to the extraction mechanism. At present, this is the only way that turns can be configured beyond about 200 MeV in the 520 MeV cyclotron. This has two consequences:

a. The energy resolution ($\Delta E/E$) of the extracted beam is quite low because the ions encountered by

the stripping foil at a given radius could be composed of portions of several packets each having different energies; and,

b. There is no beam-free space in which to mount a septum for an electrostatic deflector for extraction of negative hydrogen ions.

Achievement of acceleration in separated turns at the extraction radius is a major design objective for TRIUMF. Its realization depends on two factors:

a. **minimizing** the effective radial width of the ion beam packet by flat-topping the accelerating voltage waveform with a third harmonic RF system and improving the amplitude and phase stability of the accelerating voltage; and,

b. **maximizing** the increment in radius achieved by the ion beam during the final turns with RF booster cavities and augmented at the extraction radius by a precessional technique using the $\nu_r = 3/2$ resonance [21].

Characteristics of the Ion Beam During Acceleration

A beam packet must complete between 1500 and 1800 orbits (3000 to 3600 passes across the dee gap) in order to acquire 500 MeV of kinetic energy in the TRIUMF cyclotron. The radii of the first and final orbits (25 centimetres and 792 centimetres) suggest an average separation between turns of just over four millimetres but in practice, turn

separations at the outer radii are much smaller (less than two millimetres) than in the central regions of the cyclotron.

The radius gain per turn dR/dn, the radial incoherent width W_x occupied by 1 π - mm mrad at the azimuths of maximum and minimum extent and the radial width ΔR for central ray beams with $\pm$ 2 and $\pm$ 5 degree phase bands are shown in fig. 2.8. The dramatic decrease in the radial separation between orbits at higher energies is graphically illustrated in fig. 2.9. The ion beam trajectories are traced every 10 MeV - about every thirtieth turn. The trajectories taken by stripped beam (protons) as they reverse their radius of curvature and pass out through the beam exit horn are also shown.

2.3.2 Estimation of the Tolerances on the Regulation of the Accelerating Voltage

The advantages of superimposing a third harmonic component on the accelerating voltage - a smaller energy spread in the extracted beam and the possibility of accelerating the ion beam in separated turns - can only be realized if the accelerating voltage is sufficiently stable. The tolerances on the phase and amplitude stability of the accelerating voltage required for separated turn acceleration, the most demanding of the operating modes proposed for third harmonic enhancement of the accelerating voltage, were discussed during the design and commissioning of the cyclotron (1968 - 1974) by Richardson and Craddock

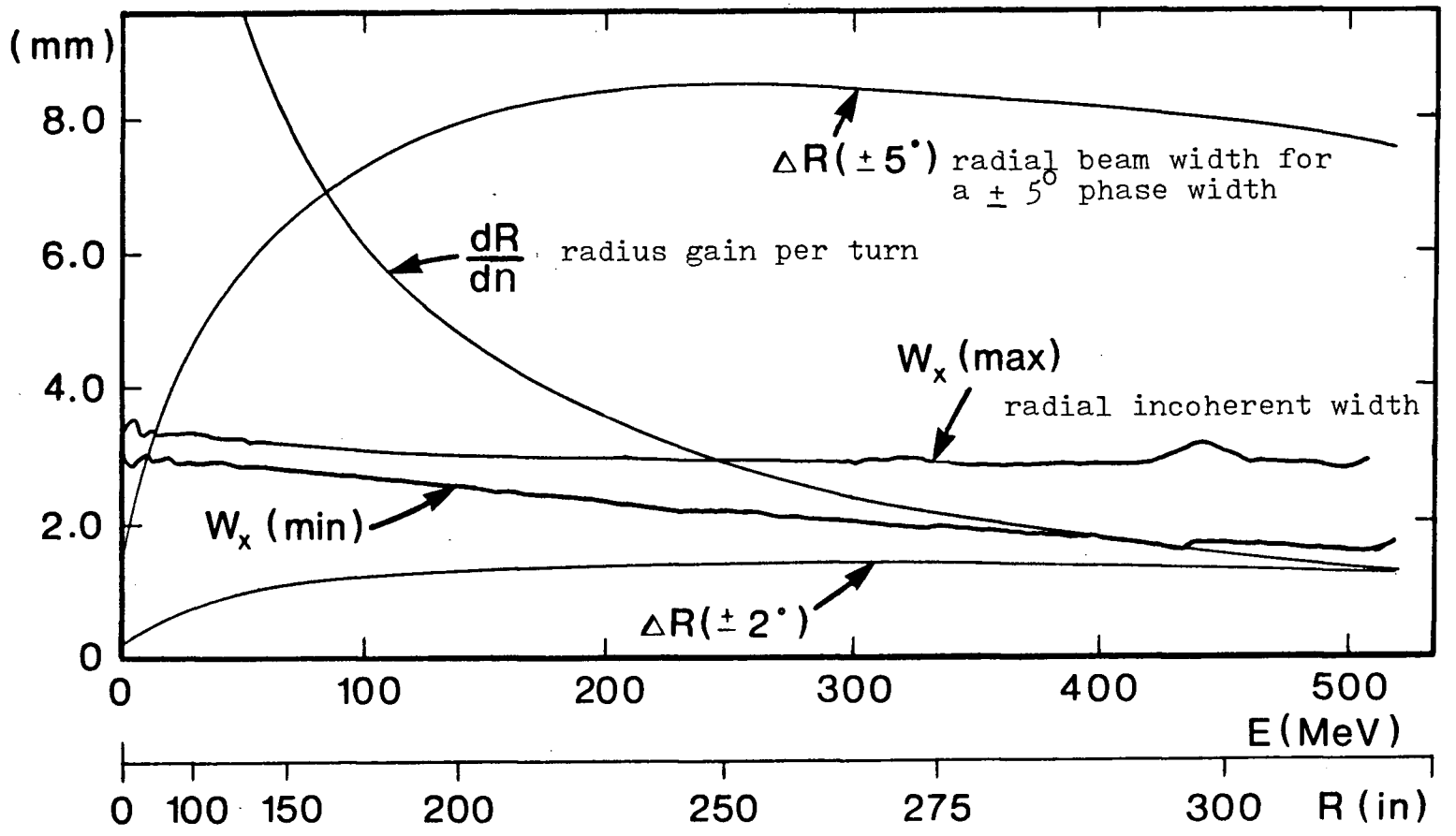

Fig. 2.8 TRIUMF Cyclotron - Characteristics of the Ion Beam During Acceleration

(after [21] p 233)

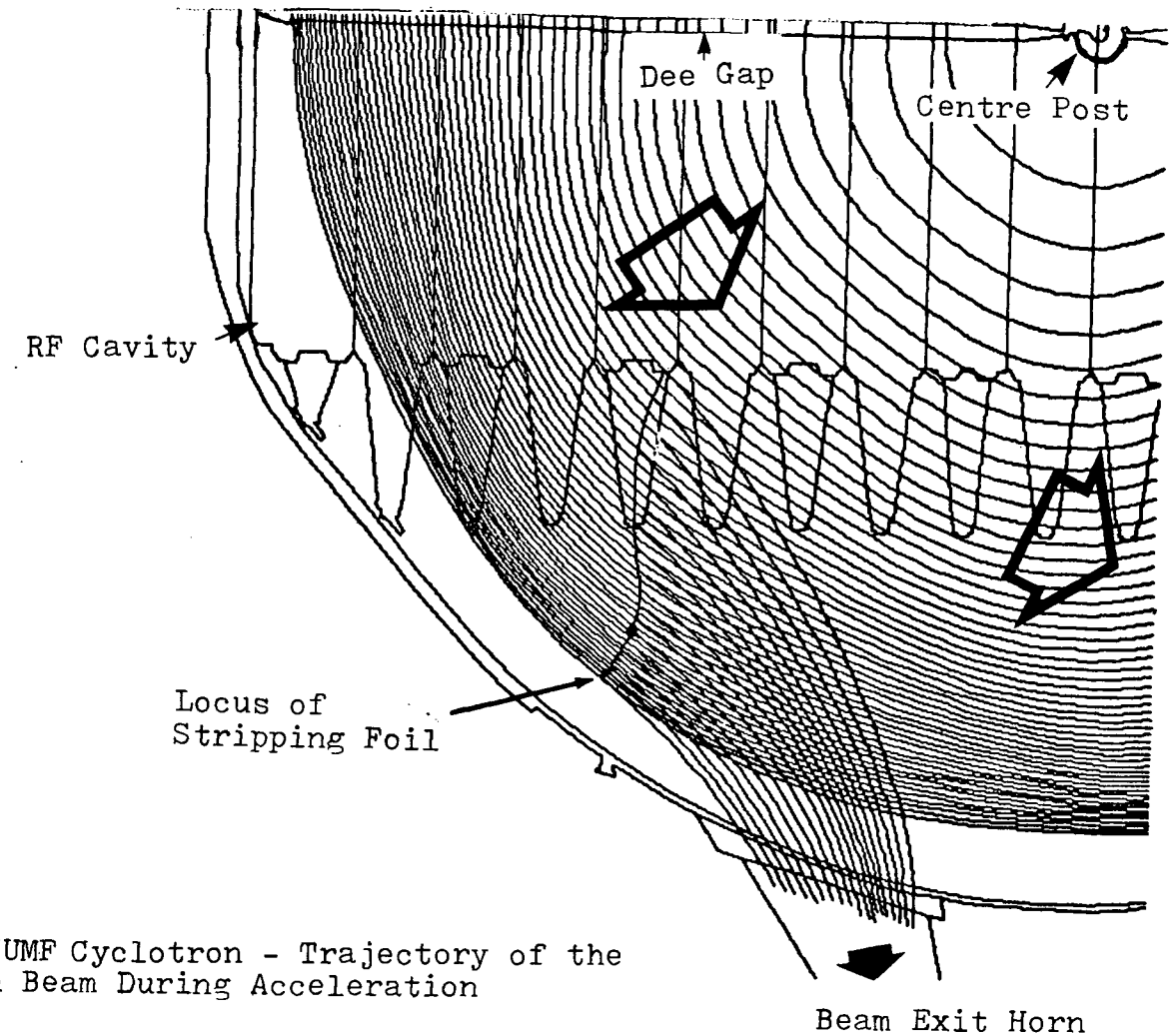

Fig. 2.9 TRIUMF Cyclotron - Trajectory of the Ion Beam During Acceleration

The trajectory followed by ions being accelerated in the 520 MeV TRIUMF cyclotron is shown. The ion beam travels counter-clockwise as viewed from above. The path of the ions is traced every thirtieth turn, i.e. approximately every 10 MeV. Note the rapid decrease in turn separation at higher energies, particularly greater than 250 MeV.

[22], Richardson [23], and Brackhaus [24]. With renewed interest in RF flat-topping (1983) these tolerances were re-examined by Durieu [25] and Laxdal [26].

A Simplified Model of Acceleration in the 520 MeV Cyclotron

A truly faithful model of acceleration in a cyclotron would be extremely complex given the large number of parameters that can affect the beam during acceleration. The purpose of this simplified model of acceleration in the cyclotron is to predict the effect of small changes or fluctuations in the accelerating voltage or cyclotron magnetic field on the energy resolution of the ion beam and to estimate the stability requirements for acceleration of the ion beam in separated turns at the extraction radius.

Traditionally, such models are based solely on considerations of the beam phase width and the magnitude and shape of the accelerating voltage waveform [27]. Such models ignore the longitudinal space charge and the phase compression-phase expansion effects which are recognized as being major factors in determining the ultimate performance of high current/intermediate energy separated turn isochronous cyclotrons such as TRIUMF and SIN. In the case of TRIUMF, the accuracy of the model is further degraded by its failure to account for the effects of the large deviations from isochronism present in the TRIUMF cyclotron's phase history [20].

Although it neglects most second order effects, the

simplified model takes complete account of all first order effects and, perhaps most importantly, the model's predictions can be expressed in closed analytical form. This complements the expensive and time-consuming numerical simulations that are normally run to account for the various second order effects. Of particular interest is the derivation of closed form expressions for the effects of amplitude and phase modulation of the accelerating voltage on the energy resolution of the ion beam at extraction.

It should also be recognized that the results of a first order model are usually only useful to first order. The results obtained from this model should be regarded as order of magnitude estimates only.

The total energy E_T gained by the ion beam is given by:

$$E_T = \sum_{n=1}^{N} dE/dn = 2q \sum_{n=1}^{N} V_{acc}(\epsilon,\delta) \qquad (2.11)$$

where: $$V_{acc}(\epsilon,\delta) = V_1 \, [\cos\phi - \epsilon \cos(3\phi + \delta)] \qquad (2.12)$$

If the amplitude and phase of the accelerating voltage are constant with time, then:

$$E_T = 2 \, q \, N \, V_{acc}(\epsilon,\delta,t) \qquad (2.13)$$

If the amplitude and phase of the accelerating voltage are time-varying, then:

$$E_T = 2 \, q/T \int_0^{t_f} V_{acc}(t) \, dt \qquad (2.14)$$

where T and t_f are defined in Table III.

The maximum possible beam energy is given by:

$$E_{max} = 2\ q\ N\ V_1\ (1 - \epsilon) \tag{2.15}$$

The penalty in reduced energy gain due to deviation of the accelerating voltage amplitude and phase from their optimum values is given by:

$$\Delta E = E_{max} - E_T \tag{2.16}$$

The more commonly used parameter is the relative energy penalty which is given by:

$$\frac{\Delta E}{E} = \frac{E_{max} - E_T}{E_{max}} = 1 - \frac{E_T}{E_{max}} \tag{2.17}$$

When the accelerating voltage parameters are constant, this quantity is given by:

$$\frac{\Delta E}{E} = 1 - \frac{V_{acc}}{V_1\ (1 - \epsilon)} \tag{2.18}$$

When the accelerating voltage parameters are time-varying, it can be approximated by:

$$\frac{\Delta E}{E} = 1 - \frac{\int_0^{t_f} V_{acc}(t)\ dt}{N\ T\ V_1\ (1 - \epsilon)} \tag{2.19}$$

The values of the parameters applicable to the TRIUMF cyclotron are presented in Table III.

TABLE III

PARAMETERS OF THE SIMPLIFIED MODEL OF ACCELERATION IN THE 520 MeV CYCLOTRON

$\omega_o = 2\pi \times 4.6 \times 10^6$ rad/s		; ION ROTATION FREQUENCY
$\omega = 5\,\omega_o = 2\pi \times 23 \times 10^6$ rad/s		; RF FREQUENCY
$T = 2\pi / \omega_o = 217.4$ ns		; ION ROTATION PERIOD
$E_i = 300$ keV	(fixed)	; INITIAL ION ENERGY
$E_f = 500$ MeV	(variable)	; FINAL ION ENERGY
$dE/dn = 2q\,V_{acc}$	= 400 keV (maximum)	; ENERGY GAIN PER TURN
	= 270 keV (typical)	
$N = \dfrac{E_f - E_i}{\langle dE/dn \rangle}$	= 1300 (minimum)	; NO. OF TURNS REQUIRED FOR ACCELERATION TO 500 MeV
	= 1950 (typical)	
$t_f = N\,T$	= 282 μs (minimum)	; ELAPSED TIME REQUIRED FOR ACCELERATION TO 500 MeV
	= 424 μs (typical)	

Static Tolerances

The model can be used to estimate the static tolerances on the amplitude and phase stability of the first and third harmonic. The expression for beam energy is expanded in terms of ϕ, the phase of the RF with respect to the ion beam, and δ, the phase of the third harmonic with respect to the fundamental. The static tolerances are estimated by determining how much each parameter can vary before the energy drift or dispersion exceeds the set bounds. These tolerances are summarized in Table IV. The RF system frequency and magnetic field stability tolerances will be met with relative ease compared to the amplitude and phase stability of the accelerating voltage. The short term stability of the main magnetic field already exceeds the required tolerance and very stable frequency synthesizers are readily available from commercial suppliers.

Orbit codes trace the trajectory of the ion beam step-by-step using a field map of the cyclotron (which, in the case of TRIUMF, was measured during the last magnetic field survey in 1974) and by calculating the velocity of the beam at a particular instant. The trajectories presented in fig. 2.10 were calculated using such a code which accounted for the phase history of the main magnet and some non-linear effects. Laxdal [26] and others have used orbit tracing codes such as GOBLIN to calculate the trajectory of the ion beam in TRIUMF and to verify the predictions of the

TABLE IV

TOLERANCES REQUIRED FOR SEPARATED TURN ACCELERATION

Parameter	Normal	Separated Turns	
Third Harmonic, ε	0	0	-0.12
Trim Coils	35	54	55
$\Delta B/B$	$\pm 1.0 \times 10^{-5}$	$\pm 0.3 \times 10^{-6}$	$\pm 1.4 \times 10^{-6}$
$\Delta\omega/\omega$	$\pm 0.25 \times 10^{-5}$	$\pm 0.15 \times 10^{-6}$	$\pm 0.9 \times 10^{-6}$
Phase Acceptance	$\pm 40^{\circ}$	$\pm 0.5^{\circ}$	$\pm 6.7^{\circ}$
$\Delta V_1/V_1$	$\pm 0.4 \times 10^{-3}$	$\pm 1.0 \times 10^{-4}$	$\pm 0.8 \times 10^{-4}$
$\Delta V_3/V_3$	-	-	$\pm 6.6 \times 10^{-4}$
$\Delta\delta$	-	-	$\pm 0.12^{\circ}$
Total Energy Spread	$\pm$ 600 keV	$\pm$ 50 keV	$\pm$ 25 keV
$\Delta E/E$ @ 450 MeV	$\pm 1.33 \times 10^{-3}$	$\pm 1.11 \times 10^{-4}$	$\pm 0.56 \times 10^{-4}$

Notes:

1. Stability is defined as the nominal peak to peak value of the AC component divided by the value of the DC component.
2. Phase acceptance is measured in fundamental RF degrees.
3. "δ" is measured in third harmonic RF degrees.

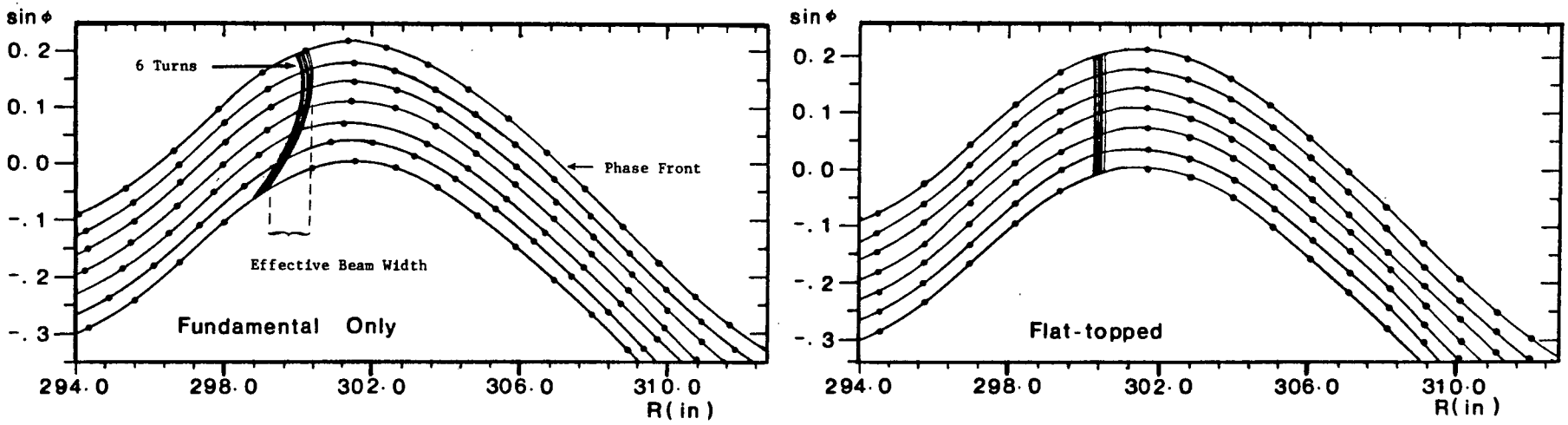

The spread in radius due to spread in phase of ions with respect to the peak in the accelerating potential waveform is clearly visible.

The leading and trailing edges of the beam packet no longer overlap the central portion of the preceding turn.

Fig. 2.10 Orbit Simulation Showing Reduction of Effective Beam Width by Flat-topping the Accelerating Voltage

The orbit code traces the path of test charges as they traverse orbits in the cyclotron magnetic field. The vertical axis, sin ϕ , is the sine of the phase difference between the time the beam crosses the dee gap and the accelerating potential is maximum.

The continuous lines trace a phase front for a particular test charge. The dots are spaced 20 turns apart. In each diagram, the test charges defining individual beam packets are connected for six successive turns near R = 300 inches (about 450 MeV).

simplified model.

The static tolerances presented in Table IV are valid only for very slow drifts in the amplitude or phase of the accelerating voltage. The effects of amplitude and phase modulation of higher frequency on the effective radial width of the ion beam were analyzed by Brackhaus [24]. Using (2.19), he developed expressions for the effect of modulation of each of the four parameters V_1, ϵ, ϕ, δ that define the accelerating voltage waveform. These expressions are summarized for reference in Table V.

2.4 THE ACCELERATING VOLTAGE PROFILE

Up to this point, the discussion has tacitly assumed that the shape of the accelerating voltage waveform will be the same at all radii. In general, however, the ratio of the fundamental and the third harmonic accelerating voltage amplitudes will not be constant along the dee gap since their voltage profiles are not uniform. Fortunately, the correction that the third harmonic voltage makes to the energy dispersion within the beam packet is a linear and therefore cumulative effect [27]. Since turn separation is required only at the extraction radius, one need only make certain that the cumulative amplitude of the third harmonic voltage seen by the beam during acceleration is in the correct ratio to the cumulative amplitude of the fundamental voltage seen by the beam. Although it might be preferable for the fundamental and third harmonic accelerating profiles to share a close resemblance, it is not essential and minor

TABLE V

EFFECT OF AMPLITUDE AND PHASE MODULATION OF THE ACCELERATING VOLTAGE ON THE ENERGY OF THE ION BEAM

$$V_{acc} = V_1 (\cos\phi - \varepsilon \cos(3\phi + \delta)); \qquad E_T/E_{max} = 2q \sum_{n=1}^{N} V_{acc} \,/\, 2qN (1 - \varepsilon) V_1$$

$$V_1(t) = V_1 (1 + m \cos(\omega_m t + \phi_m))$$

m, ω_m, and ϕ_m are the amplitude, frequency, and phase of the modulating signal

$$\frac{E_T}{E_{max}} = \left[\frac{\cos\phi - \varepsilon \cos 3\phi}{1 - \varepsilon}\right]\left[1 + \frac{m}{\omega_m t_f} (\sin(\omega_m t_f + \phi_m) - \sin\phi_m)\right]$$

$$\varepsilon(t) = \varepsilon (1 + m \cos(\omega_m t + \phi_m))$$

$$\frac{E_T}{E_{max}} = \left[\frac{\cos\phi - \varepsilon \cos 3\phi}{1 - \varepsilon}\right]\left[1 + \frac{m}{\omega_m t_f} (\sin(\omega_m t_f + \phi_m) - \sin\phi_m)\right]$$

$$\delta(t) = \delta \cos(\omega_m t + \phi_m)$$

$$\frac{E_T}{E_{max}} = \frac{1}{1 - \varepsilon}\left[\cos\phi - \varepsilon J_o(\delta) \cos 3\phi + \frac{2\varepsilon}{\omega_m t_f} \sum_{n=1}^{\infty} (-1)^{n+1} \sin(3\phi - (1-n)\tfrac{\pi}{2}) \frac{J_n(\delta)}{n} (\sin(n(\omega_m t_f + \phi_m)) - \sin(n\phi_m))\right]$$

$$\phi(t) = \phi_o + \phi_1 \cos(\omega_m t + \phi_m)$$

$$\frac{E_T}{E_{max}} = \frac{1}{1 - \varepsilon} J_o(\phi_1) \cos\phi_o - \varepsilon J_o(3\phi_1) \cos 3\phi_o - \frac{2}{\omega_m t_f} \sum_{n=1}^{\infty} \left[\frac{(-1)^{n+1}}{n} (\sin(n(\omega_m t_f + \phi_m)) - \sin(n\phi_m))\right] \cdot \left[(J_n(\phi_1) \sin(\phi_o + (1-n)\tfrac{\pi}{2}) - \varepsilon J_n(3\phi_1) \sin(3\phi_o + (1-n)\tfrac{\pi}{2}))\right]$$

---

deviations are acceptable provided the tolerances on the left-right and up-down symmetry between dees are respected [12].

In absolute terms, it would be desirable for the composite accelerating voltage profile to increase with increasing radius for two reasons. Since dR/dn for a given dE/dn decreases with increasing R, it is obviously desirable to give the ion beam as large a dE/dn as possible at large R to keep the separation between turns as large as possible. A second order effect, phase compression-phase expansion, also suggests that a radially increasing voltage profile is desirable.

First mentioned by Mueller and Mahrt [14] and generalized by Joho [17], the phase compression-phase expansion effect is caused by the RF magnetic field that accompanies a non-uniform accelerating voltage profile. This field compresses the bunch size of the circulating beam for a radially increasing voltage or expands it for a radially decreasing voltage. This phase compression-phase expansion effect was first verified experimentally in the 590 MeV ring cyclotron at SIN [28]. This effect plays an essential role in the operation of both the IUCF main stage cyclotron and SIN's injector II cyclotron. The phase expansion-phase compression effect has not yet been studied in connection with the TRIUMF cyclotron, however.

The original design for TRIUMF specified a uniform accelerating voltage profile because it was believed this would naturally develop given the regular shape of the RF cavity. Recent measurements have shown that the accelerating voltage in TRIUMF decreases toward the outer radii (see Appendix B) which is obviously not desirable. It is currently planned to flatten the voltage profile by making appropriate changes to the RF cavity's geometry. The factors described here suggest that the possibility of reversing the slope in the voltage profile, rather than merely flattening it, should be investigated.

References:

[1] E.W. Blackmore, M.K. Craddock, G. Dutto, D.A. Hutcheon, C.J. Kost, R. Liljestrand, G.H. Mackenzie, C.A. Miller, J.G. Rogers, and P.W. Schmor. "Improved Beam Quality at TRIUMF." *IEEE Trans* NS-26(3):3218-3220 (June 1979).

[2] W.R. Rawnsley, G.H. Mackenzie, and C.J. Oram. "The Production and Measurement of 150 ps Beam Pulses from the TRIUMF Cyclotron." *Proc 10th Int Conf on Cyclotrons and their Applications*, pp 237-240 (1984).

[3] D.J. Clark. "Beam Diagnostics and Instrumentation" *IEEE Trans* NS-13(4):15-23 (August 1966).

[4] M. Olivo. "Beam Diagnostic Equipment for Cyclotrons." *Proc 7th Int Conf on Cyclotrons and their Applications*, pp 331-340 (1975).

[5] E.W. Blackmore, D.A. Dohan, G.H. MacKenzie, and R. Poirier. "Developments Toward Separated Turns at TRIUMF." *Proc 9th Int Conf on Cyclotrons and their Applications*, pp 485-487 (1981).

[6] R. Baartman, G. Dutto, P.W. Schmor. "The TRIUMF High Efficiency Beam Bunching System." *Proc 10th Int Conf Cyclotrons and their Applications*, pp 158-160 (1984).

[7] M.K. Craddock, R.J. Louis, M. Reiser. "H- Ion Injection into the Central Region of the TRIUMF Cyclotron." *Proc 5th Int Cyclotron Conf*, pp 666-669 (1969).

[8] G. Dutto, C. Kost, G.H. Mackenzie. "Optimization of the Phase Acceptance of the TRIUMF Cyclotron." *Proc 6th Int Cyclotron Conf*, pp 340-350 (1972).

[9] M.K. Craddock. "Effects of Third Harmonic on the RF Waveform." TRIUMF Design Note TRI-DN-72-15. (June 1972).

[10] M.M. Gordon. "Improving the Energy Resolution and Duty Factor of Isochronous Cyclotrons." *Particle Accelerators* 2:203-209 (1971).

[11] J.R. Richardson. "The Present Status of TRIUMF." *Proc 6th Int Cyclotron Conf*, pp 126-140 (1972).

[12] G. Mackenzie, C. Kost, G. Dutto. "Allowable Left-Right Asymmetry in Accelerating Voltage." TRIUMF Design Note TRI-DN-73-17 (April 1973).

[13] T.A. Welton. "Sector-Focused Cyclotrons." Nucl Sci Ser Report No. 26, NAS-NRC-656, p 192 (Washington, D.C., 1959).

[14] R.W. Mueller and R.W. Mahrt. "Phase Compression and Phase Dilation in the Isochronous Cyclotron." *Nucl Inst Meth* 86:241-244 (September 1970).

[15] M.M. Gordon. "The Longitudinal Space Charge Effect and Energy Resolution." *Proc 5th Int Cyclotron Conf*, pp 305-317 (1969).

[16] S. Adam. "Calculation of Space Charge Effects in Isochronous Cyclotrons." *IEEE Trans* NS-32(5):2507-2509 (October 1985).

[17] W. Joho. "Application of the Phase Compression - Phase Expansion Effect for Isochronous Storage Rings." *Particle Accelerators* 6:41-52 (1974).

[18] W. Joho, S. Adam, B. Berkes, T. Blumer, M. Humbel, G. Irminger, P. Lanz, C. Markovits, A. Mezger, M. Olivo, L. Rezzonico, U. Schryber, P. Sigg. "Commissioning of the New High Intensity 72 MeV Injector II for the SIN Ring Cyclotron." *IEEE Trans* NS-32(5):2666-2668 (October 1985).

[19] H.G. Blosser. "Future Cyclotrons." *Proc 6th Int Cyclotron Conf*, pp 16-32 (1972).

[20] M.K. Craddock, E.W. Blackmore, G. Dutto, C.J. Kost, G.H. MacKenzie, and P. Schmor. "Improvements to the Beam Properties of the TRIUMF Cyclotron." *IEEE Trans* NS-24(3):1615-1617 (June 1977).

[21] G.H. MacKenzie, M. Zach, R.E. Laxdal, J.R. Richardson, M.K. Craddock,and G. Dutto. "Plans for the Extraction of Intense Beams of H- Ions from the TRIUMF Cyclotron." *Proc 10th Int Conf on Cyclotrons and Their Applications*, pp 233-236 (1984).

[22] J.R. Richardson and M.K. Craddock. "Magnetic Field Tolerances for a Six-Sector 500 MeV H- Cyclotron." TRIUMF Report TRI-67-2 (December 1968).

[23] J.R. Richardson. "Energy Resolution in a 500 MeV H- Cyclotron." TRIUMF Report TRI-69-6 (June 1969).

[24] K.H. Brackhaus. "The Generation and Control of 1.5 Megawatts of RF Power for the TRIUMF Cyclotron." Ph.D. Dissertation, University of British Columbia (1975).

[25] L. Durieu. "Re-examination of RF System Tolerances for Separated Turn Acceleration in TRIUMF." TRIUMF Internal Report (September 1983).

[26] R.E. Laxdal. "Tolerances Associated with Alternate Extraction Schemes." TRIUMF Design Note TRI-DN-83-50 (December 1983).

[27] M.M. Gordon. "Design Considerations for A Separated Turn Isochronous Cyclotron." *Nucl Inst Methods* 58:245-252 (1968).

[28] S. Adam, J. Cherix, W. Joho, M. Olivo. "Determination of Effective Accelerating Voltages in Cyclotrons Using the Phase Compression-Phase Expansion Effect." *IEEE Trans* NS-26(2):2146-2149 (April 1979).

CHAPTER 3

DEMONSTRATION OF A FLAT-TOPPED ACCELERATING VOLTAGE IN THE RF SYSTEMS TEST FACILITY CAVITY

3.1 INTRODUCTION

A conceptual design for a third harmonic RF system to flat-top the accelerating voltage in the TRIUMF cyclotron, based on the concept of exciting both the fundamental and third harmonic accelerating modes in the same RF cavity, was presented by Erdman et al [1] in 1969, shortly after the detailed design of the cyclotron and its support systems began.

During the period from 1970 to 1972, a more detailed design of the cyclotron's fundamental and third harmonic RF system emerged. Several internal design notes [2] - [10], two graduate theses [11] [12], and two conference publications [13] [14] presented the results of this work, which culminated in the first successful operation of the cyclotron 23 MHz RF system at full power under vacuum in late 1974. Unfortunately, several problems appeared during the first several months of operation, including failure of the cavity's automatic tuning actuators and "leakage" of 23 MHz RF into the supposedly field-free region between and behind the RF cavity's dees or "hot arms", as described in Appendix B. Further design and development of the third harmonic RF system was postponed while these problems were

investigated and solutions were developed.

In 1983, the concept of third harmonic flat-topping was resurrected for reasons of both opportunity and need:

- Under the terms of the RF Resonator Replacement Program [15], major structural improvements will be made to the cyclotron RF cavity in 1986/87. This will provide an opportunity to make the changes to the RF cavity that are necessary to permit third harmonic flat-topped operation; and,
- The plan to extract H- by electrostatic deflection into a magnetic channel for injection by charge exchange into the proposed KAON factory post-accelerator (instead of extracting protons by stripping the electrons from the H- ions from the cyclotron as is currently done) requires that the beam accelerate in separated turns at the extraction radius. As discussed in chapter two, flat-topping the accelerating voltage is one of three ways of increasing the separation between adjacent turns while the ion beam is being accelerated.

The design of the modifications to the cyclotron RF system that are required begins with a description of the existing system and formulation of a set of design objectives for the upgrade program. For reference, these have been summarized and presented in the last section of Appendix B.

The ideal vehicle for developing the modifications to the cyclotron RF cavity that are required by the RF Resonator Replacement Program [15] and the RF Third Harmonic Flat-topping Project [16], including new cavity tuning and coupling mechanisms, would be the cyclotron itself but since regular beam production began in 1975, access to the cyclotron has generally been restricted to the month-long shutdowns for maintenance and modification that are scheduled approximately twice per year. Even then, residual radiation in the cyclotron vacuum tank limits access by individuals to less than an hour per day. The limit is set by the time required to accumulate the maximum permissible radiation dosage of 50 millirem per day or 300 millirem per shutdown.

The walls of the vacuum tank are activated by the fraction of the ion beam lost to electromagnetic stripping at higher energies, especially greater than about 450 MeV [17] [18], and to the fraction removed by beam scrapers used to limit the vertical extent of the ion beam during acceleration at energies beyond about 70 MeV [17] [19]. Great care has been taken to limit activation of the floor and ceiling of the vacuum tank and other structures and to concentrate activation in the outer walls of the vacuum tank because they can be relatively easily shielded to reduce exposure of personnel to radiation during maintenance periods. As a result of this plan, the residual radiation levels in the cyclotron increase with distance from the

central region. Personnel working in the vicinity of the flux guides and number ten resonator segments accumulate the maximum radiation dosage far more quickly than personnel working in the central region of the machine (see fig. 7 in [19]).

Techniques for improving characteristics of the beam, including new accelerating voltage detection and regulation schemes, can only be tested using the cyclotron. Such activities normally take place during the twenty-four hour long beam/cyclotron development shifts that are scheduled approximately once every two weeks during normal operation. Because of the residual radiation problem, the bulk of cyclotron RF system development must take place using replicas of the cyclotron, especially during the initial stages of a project. During the past three years, two replicas of the cyclotron RF system have been developed:

a. a 1:10 scale model of the cyclotron vacuum tank and radio frequency cavity; and,

b. a singly reentrant resonant cavity constructed from components identical to those that make up the cyclotron radio frequency cavity which together with two high power RF transmitters, a vacuum system, a resonator water cooling system, and other support services is referred to as the RF systems test facility.

The 1:10 Scale Model

The effect of changes in the geometry of the cyclotron

on the accelerating modes in the cyclotron radio frequency cavity and parasitic modes in the beam gap are being studied using a radio frequency network analyzer to excite and measure the response of the 1:10 scale model of the cyclotron vacuum tank and radio frequency cavity (see section B.4). These investigations have been concerned with reducing the coupling of energy from the two accelerating modes into parasitic modes in the beam gap and making the accelerating voltage profile at fundamental and third harmonic more uniform by:

a. modifying the shape of the cavity shorting plane (root) in the central region of the cyclotron;

b. modifying the shape of the cyclotron centre post and associated structures;

c. modifying the shape of the flux guides; and,

d. covering the slots formed by the gap between individual resonator segments and the upper and lower flux guides.

The RF Systems Test Facility

The RF systems test facility provides an opportunity to investigate problems (at full scale rather than reduced scale) that complement those being studied on the scale model of the cyclotron, including:

a. design and development of cavity tuning mechanisms and a tuning control algorithm for the fundamental and third harmonic modes; and,

b. design and development of coupling loops and

matching networks for the fundamental and third harmonic modes.

Most importantly, however, the test facility permits the feasibility of RF flat-topping at TRIUMF to be experimentally verified using a cavity with operating characteristics and mechanical construction similar to those of the cyclotron RF cavity and under realistic operating conditions. Objectives that were met during the course of this design study included:

a. demonstration of flat-topping of the accelerating voltage at both signal levels (a few volts) and operational levels ($V_{dee} \cong 100$ kilovolts at 23 MHz) [20] [21];

b. testing and evaluation of prototype and production versions of radio frequency cavity hardware [20] [22]; and,

c. testing and evaluation of a prototype version of the new radio frequency control system [21] (see also chapter four).

3.2 THE RF SYSTEMS TEST FACILITY

3.2.1 General Description

The test facility is built around a re-entrant resonant cavity formed by mounting two resonator segments and flux guides (identical to the components that make up the cyclotron RF cavity) within a large cylindrical tank capable of sustaining a vacuum of 10^{-7} Torr. A photograph of the

test facility is shown in fig. 3.1. The vacuum chamber has been opened and the RF cavity has been rolled out for modification and maintenance.

A plan view of the facility is presented in fig. 3.2. Plan and side views of the RF test cavity are presented in fig. 3.3. The dashed lines to the right of the cavity outline represent the electrical image of the opposite dee in the dee tip grounding plane. A cross-section of the cavity through the dee gap is presented in fig. 3.4, showing the dimensions of the test facility cavity in relation to the cyclotron RF cavity.

There are three principal differences between the test facility cavity and the cyclotron RF cavity:

1. The beam gap in the test facility does not support parasitic modes coupled to the accelerating modes in the RF cavity like the beam gap in the cyclotron does. One can excite the test facility RF cavity without concern for unexpected heating and sparking in the region between and behind the resonators;
2. The test facility cavity contains just over 1/40th of the volume that the cyclotron cavity does, so it requires just over 1/40th the power that the cyclotron cavity requires to achieve a 100 kilovolt dee voltage - approximately 40 kilowatts compared to approximately 1.2 megawatts; and,
3. The test facility cavity cannot be excited in the push-push mode because it is singly rather than doubly re-

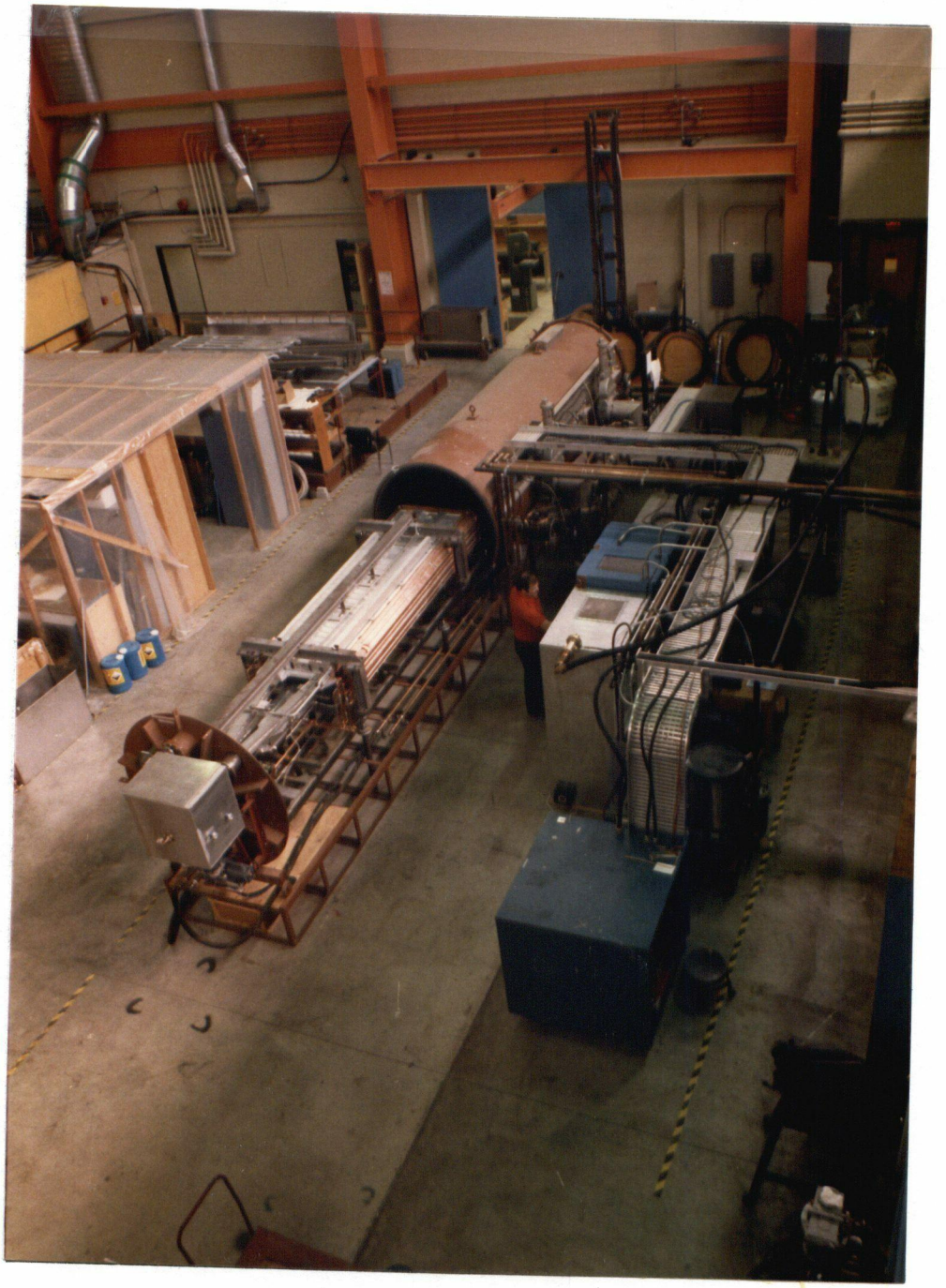

Fig. 3.1 Radio Frequency Systems Test Facility

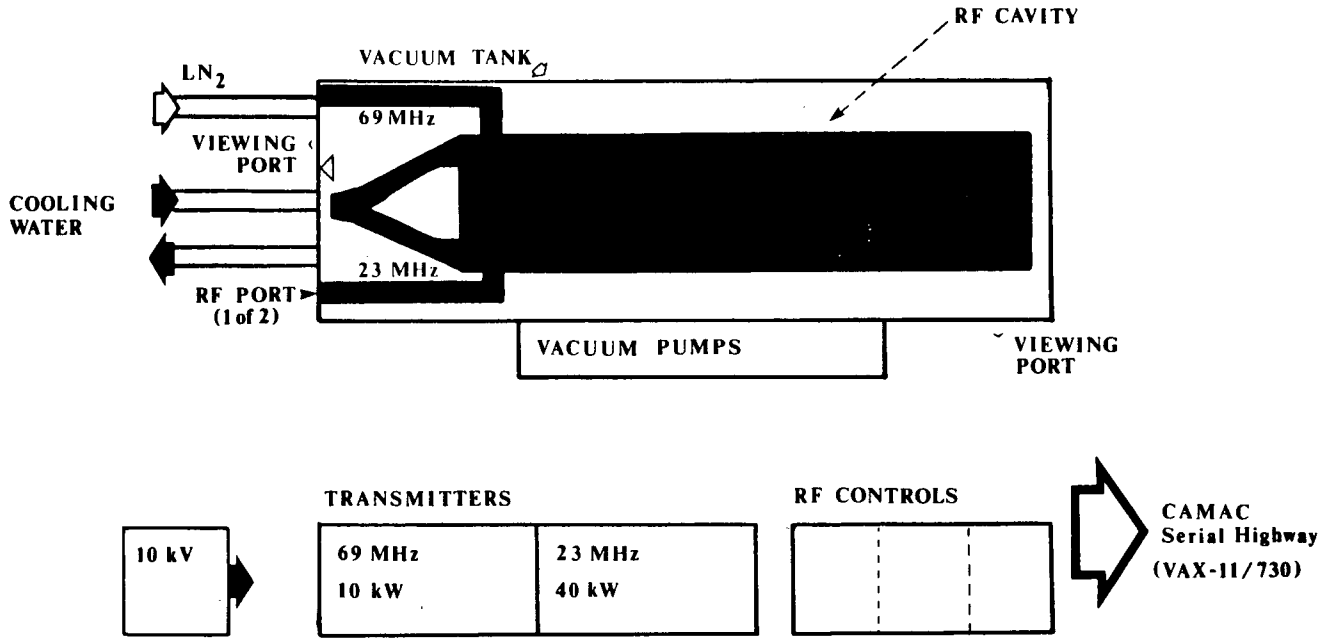

Fig. 3.2 RF Systems Test Facility - Plan View

Test Facility RF Cavity	Fig. 3.3
RF Transmitters	Fig. 3.5
RF Controls Rack	Fig. 4.11

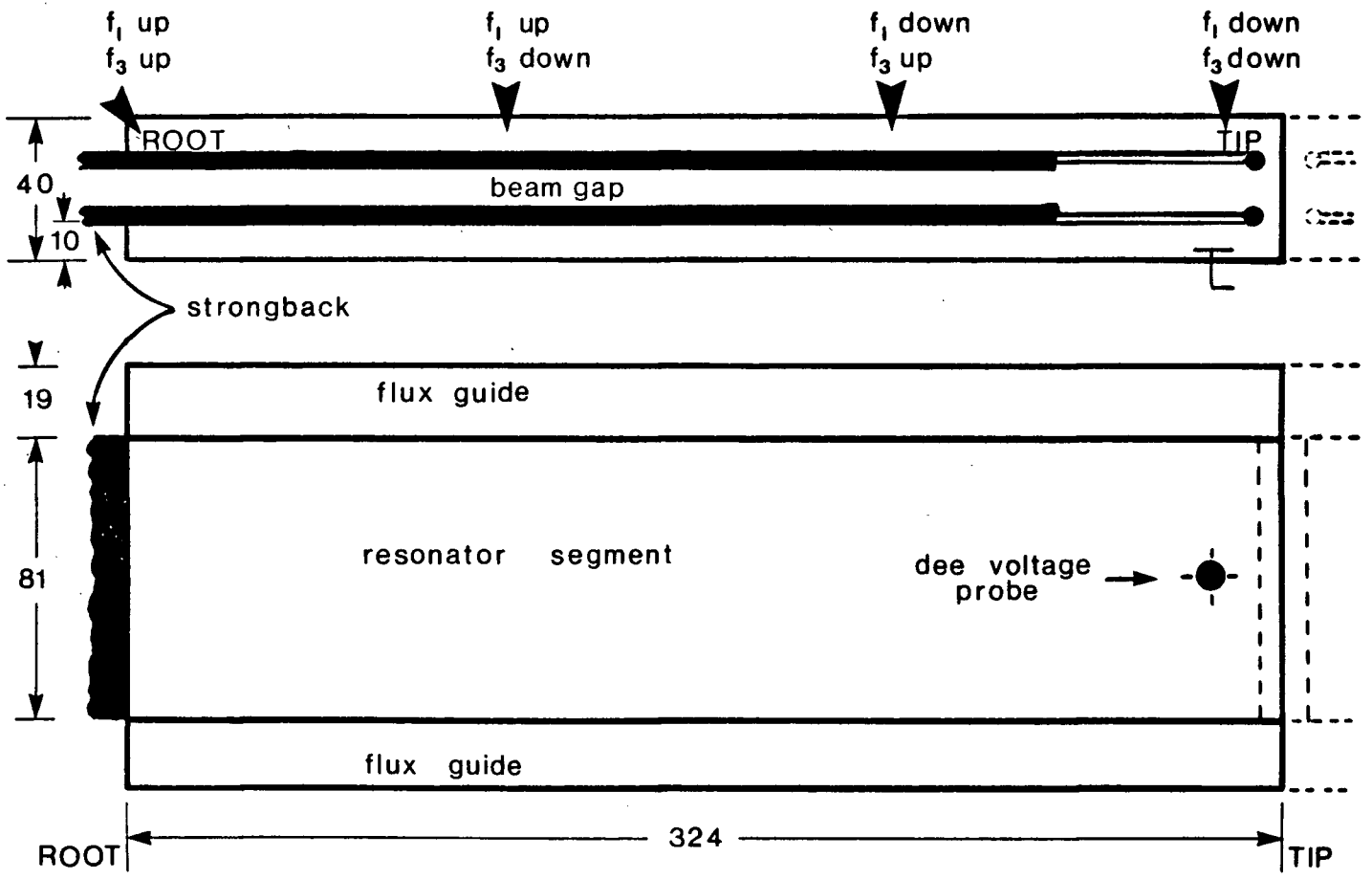

Fig. 3.3 RF Systems Test Facility - RF Cavity

All dimensions in centimetres

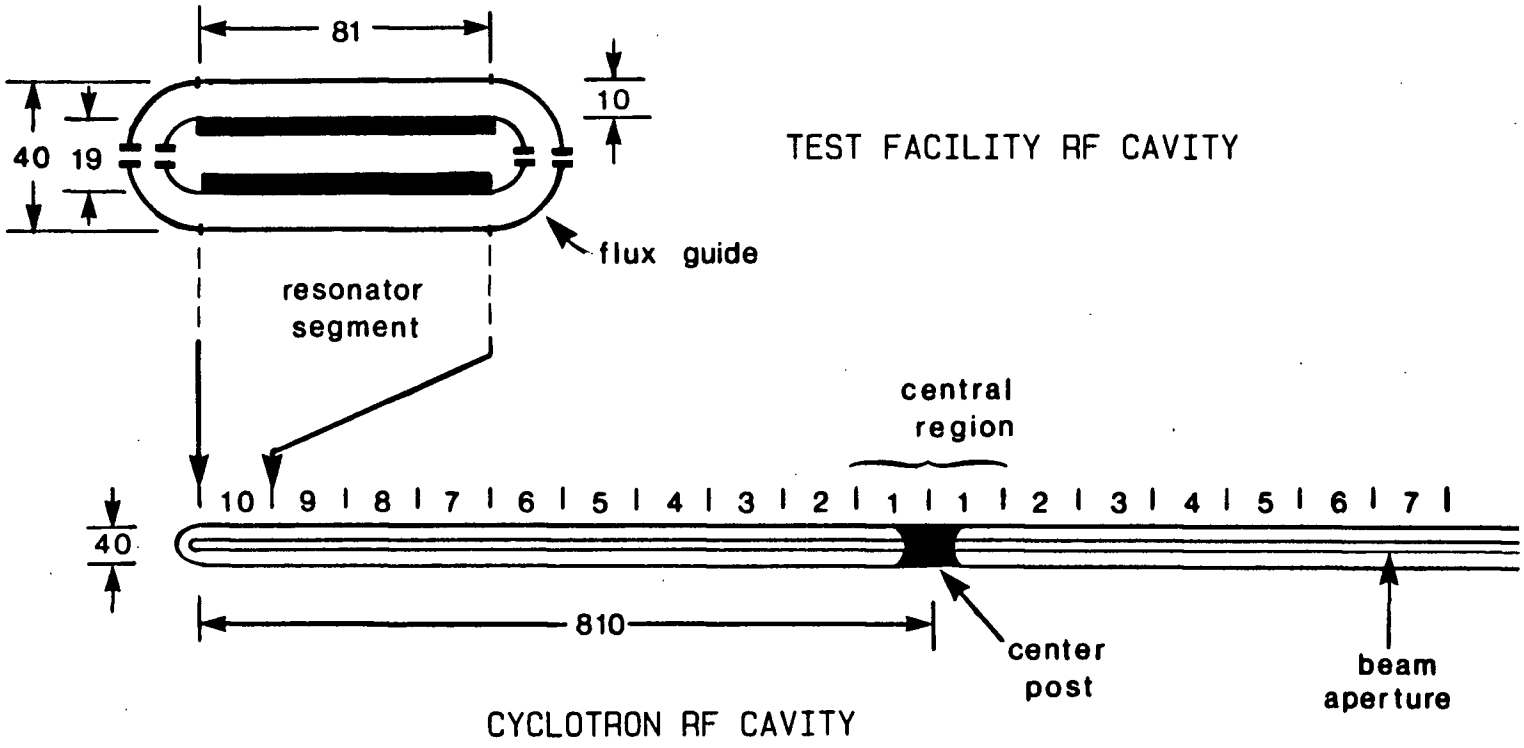

Fig. 3.4 Comparison Between the Test Facility RF Cavity and the Cyclotron RF Cavity

All dimensions in centimetres

entrant. This is unfortunate for two reasons:

The effects of asymmetric misalignment of the dees (hot arms) on either side of the dee gap cannot be studied; and,

A technique for estimating the equivalent capacitance of the short gap, based on the frequency difference between the push-push and push-pull modes, cannot be used. Our estimate of the short gap capacitance of the test facility RF cavity was made indirectly using equation (3.4).

Test Facility Support Equipment

Two custom-built high-power transmitters are used to excite the test facility cavity during high-level tests. The first is based on a 4CX25 000 tetrode in the final stage and is capable of delivering in excess of 40 kilowatts of power into a 50 ohm load at 23 MHz. The second is also based on a 4CX25 000 tetrode and is capable of delivering in excess of 10 kilowatts into a 50 ohm load at 69 MHz. A block diagram showing the two transmitters is presented in fig. 3.5.

Function and Operation

Development of the test facility was begun in response to the needs of the RF Resonator Replacement Program. In this role, one of the two standard resonator segments in the test facility is replaced with a prototype of a new resonator segment. The test facility is evacuated to 10^{-7} Torr by turbo-molecular and oil diffusion vacuum pumps and a liquid nitrogen cryopanel. High pumping speeds tend to

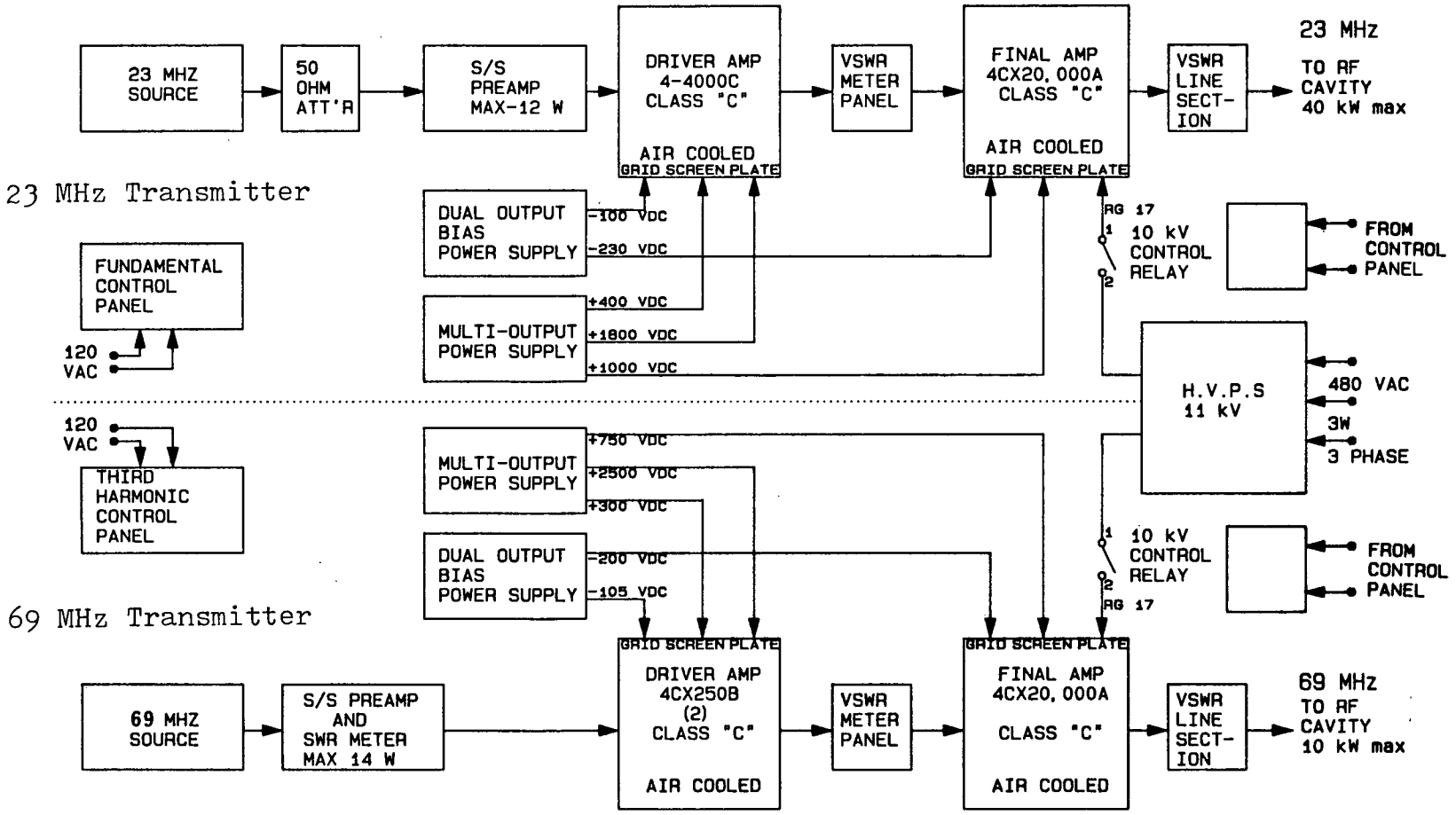

Fig. 3.5 RF Systems Test Facility - RF Power Sources

alleviate the recurring problem of contamination of the vacuum by minute water leaks in the resonator cooling system. The cavity is then driven with sufficient power at 23 MHz (approximately 30 kilowatts) to support a dee voltage in excess of 80 kilovolts. Because an automatic tuning mechanism is not usually available during such tests, the system is driven at the natural frequency of the cavity rather than at a fixed frequency, i.e. in a self-excited mode. The mechanical characteristics of the prototype segment are evaluated under realistic operating conditions, including:

a. the amplitude of cantilevered panel (hot arm) vibrations excited by fluctuations in the pressure of the resonator cooling water;

b. deformation and sagging of the resonator support structure (strongback) caused by heating due to power dissipated by parasitic modes in the cyclotron vacuum tank (and simulated in the test facility by heating coils); and,

c. the general mechanical soundness of the prototype resonator segment.

This procedure was used to verify the mechanical soundness of the prototype resonator segment that was installed in the cyclotron in the spring of 1985 [22] as part of the first phase of the resonator replacement program.

As studies of the fundamental and third harmonic modes progressed on the 1:10 scale model of the cyclotron, the need to begin developing new cavity tuning, coupling, and control systems to support a flat-topped accelerating voltage in the cyclotron became apparent. The test facility was pressed into service as described in this chapter.

3.2.2 Description of the Radio Frequency Cavity

The test facility cavity is a short gap re-entrant cavity. Such cavities and their characteristics have been described by several authors including Slater [23], Ramo et al [24], Liao [25], and Mavrogenes and Gallagher [26]. The transmission line model provides a convenient method for determining the resonant frequencies of such a cavity, as well as the approximate field distribution within the cavity. To simplify the analysis of various tuning and coupling mechanisms, the test facility cavity's transmission-line equivalent circuit was used to generate an equivalent short gap coaxial resonator as suggested by fig. 3.6.

Parameters of the Transmission Line Model

Three parameters define the cavity in the transmission line model:

a. the characteristic impedance of the transmission line, Z_o;

b. the length of the transmission line, l; and,

c. the capacitance of the short gap, C_{gap}.

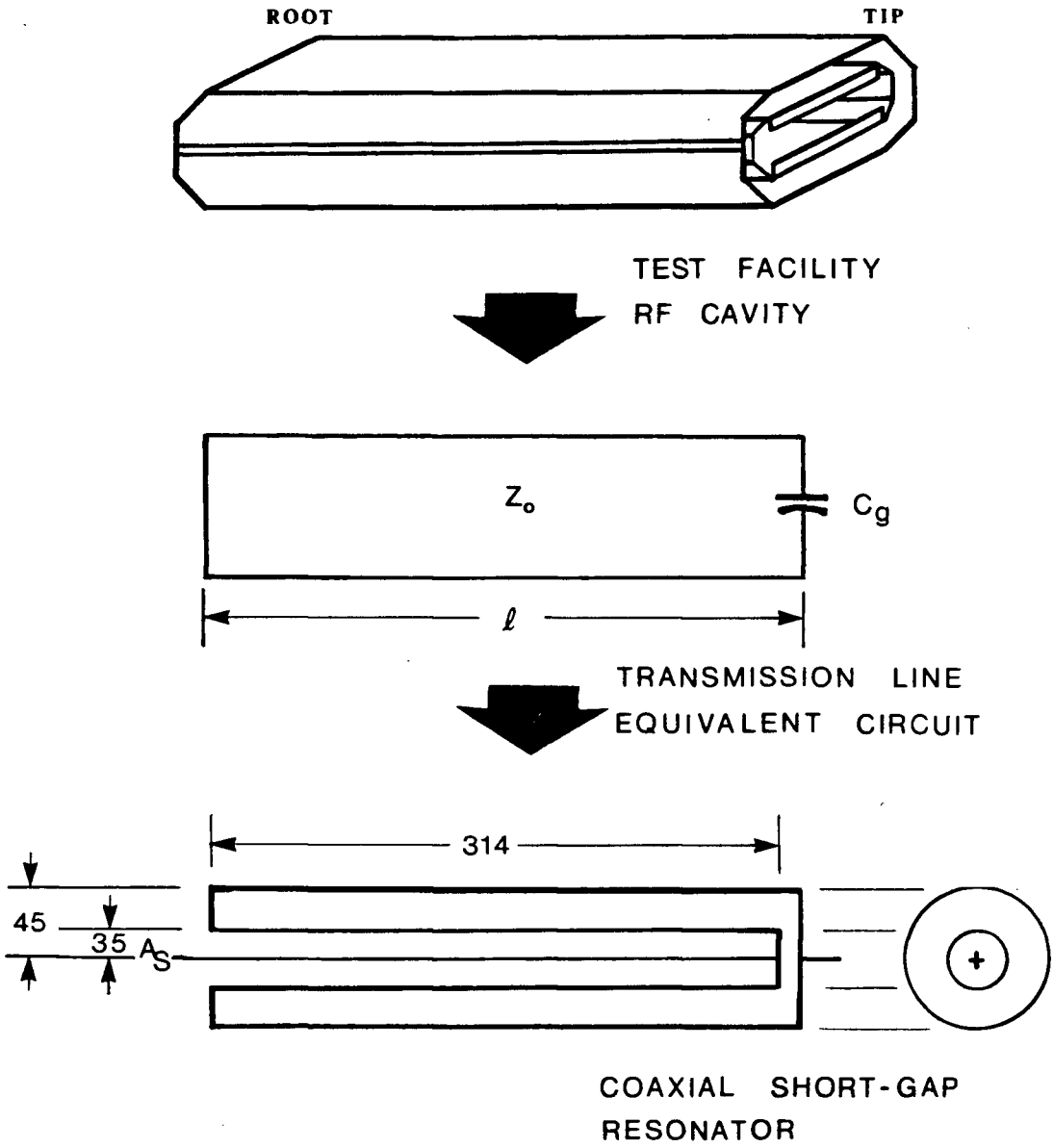

Fig. 3.6 A Transmission Line Model of the Test Facility RF Cavity

$Z_o \sim 15\ \Omega$ $\qquad f_1 \sim 23.30 \times 10^6$ Hz

$C_g \sim 17.5$ pF $\qquad f_3 \sim 69.91 \times 10^6$ Hz

$\ell \sim 314$ cm

All dimensions in centimetres

Using the concept of transverse resonance, one obtains:

$$\frac{j}{\omega C_g} = j Z_o \tan kl \tag{3.1}$$

$$j Z_o \tan kl + \frac{1}{j \omega C_g} = 0 \tag{3.2}$$

To solve for ω, one rewrites equation (3.2) as:

$$\tan (\omega l/c) = \frac{1}{Z_o \omega C_g} \tag{3.3}$$

and solves the resulting transcendental equation. This has been done graphically in fig. 3.7. Although in the ideal case, the frequency of the TEM-like third harmonic push-pull mode is greater than three times the frequency of the TEM-like fundamental push-pull mode (because the capacitive reactance of the short gap is smaller at the higher frequency), in practice it may also be lower due to various perturbations in the geometry of the structure.

The percentage of electric field energy stored in the short gap of the cavity is of particular interest. If it is sufficiently small, the analysis of cavity coupling and tuning mechanisms can be further simplified by ignoring it and simply modelling the test facility cavity as a quarter-wave coaxial resonator instead.

First, given the characteristic impedance and length of

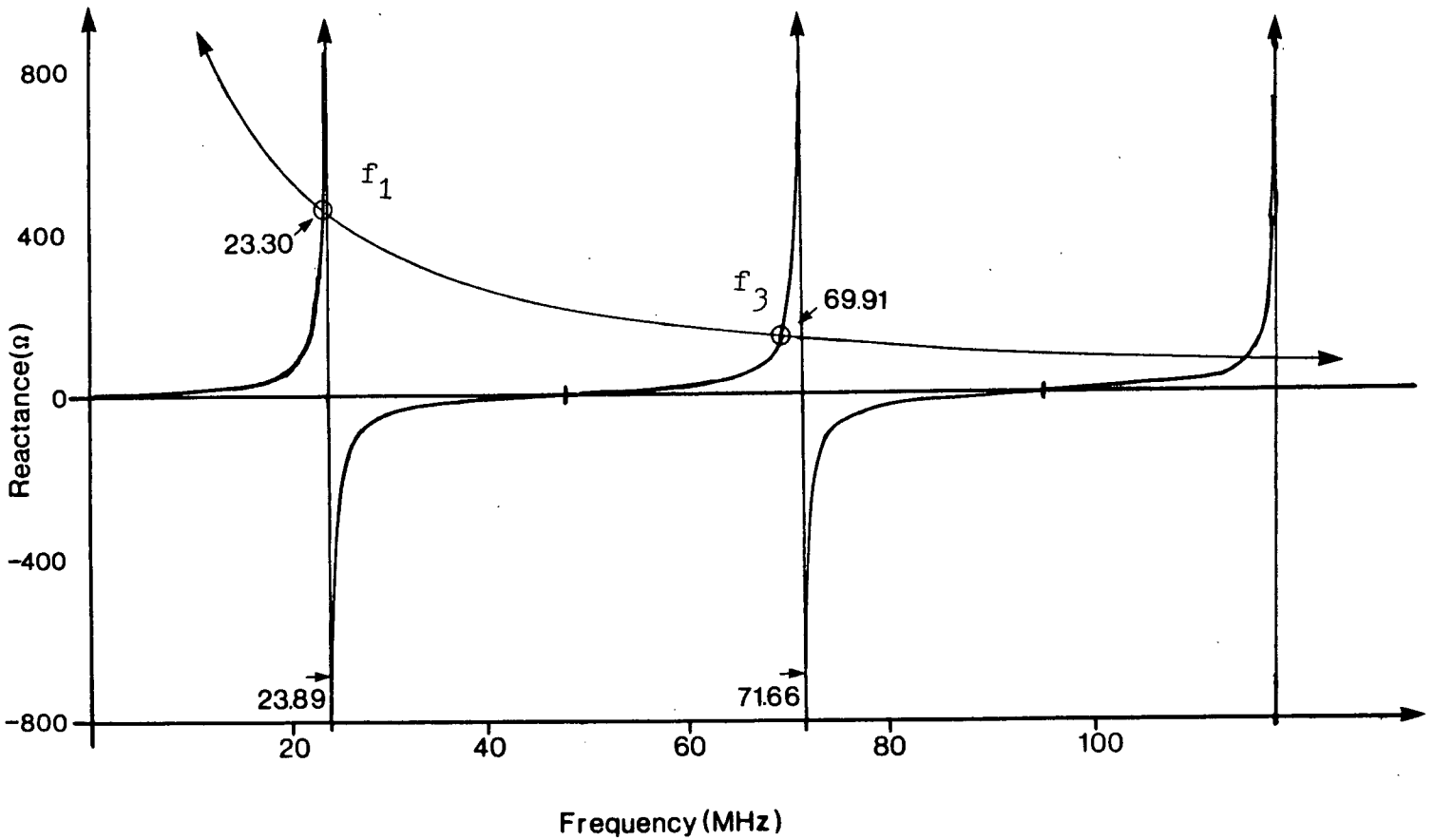

Fig. 3.7 Solution of (3.3), the Eigenvalue Equation of the Test Facility RF Cavity

the transmission line, and the resonant frequency of the cavity, the short gap capacitance can be estimated:

$$C_g = \frac{1}{Z_o \ \omega \ \tan(\omega l/c)} \tag{3.4}$$

This yields a value for the short gap capacitance of approximately 17.5 picofarads.

Next, given the unloaded quality factor of the cavity (approximately 5800), the equivalent capacitance of the cavity measured with respect to the dee voltage can be estimated:

$$Q_o = \frac{\omega \ (1/4 \ C_{equiv} \ V_{dee}^2)}{P} \tag{3.5}$$

$$C_{equiv} = \frac{4 \ Q_o \ P}{\omega \ V_{dee}^2} \tag{3.6}$$

Measurements show that it takes approximately 40 kilowatts of power at 23 MHz to support a 100 kilovolt dee voltage in the test facility cavity at 23.3 MHz. This gives an equivalent total capacitance of approximately 635 picofarads.

Because the capacitance of the short gap (~ 17.5 pF) is so much smaller than the total equivalent capacitance of the cavity (~ 635 pF):

$$C_g < 3\ \%\ \text{of}\ C_{equiv} \tag{3.7}$$

it was neglected in the simplified model of the cavity used for analysis of tuning and coupling schemes.

Characteristics of a Loop-Coupled Cavity

The characteristics of a loop-coupled RF cavity when it is driven near resonance may be described using the simple equivalent circuit shown in fig. 3.8. It is assumed that the self-inductance of the coupling loop is cancelled by a comparatively broadband matching network represented by the series capacitance C_m.

A measure of the difference between the driving frequency f and the cavity's resonant frequency f_o may be obtained by comparing the phase of the transmission line current i_1 and the RF cavity root current i_2:

$$\arg(i_2/i_1) = \arctan\,[Q_L[(f/f_o)^2-1]] - 90^o \tag{3.8}$$

Assuming a constant forward drive power, the fraction of the power reflected back to the transmitter is given by:

$$|\Gamma|^2 = \left| \frac{Q_L\ (f/f_o)}{1 + j\ Q_L\ (f/f_o)} \right|^2 \tag{3.9}$$

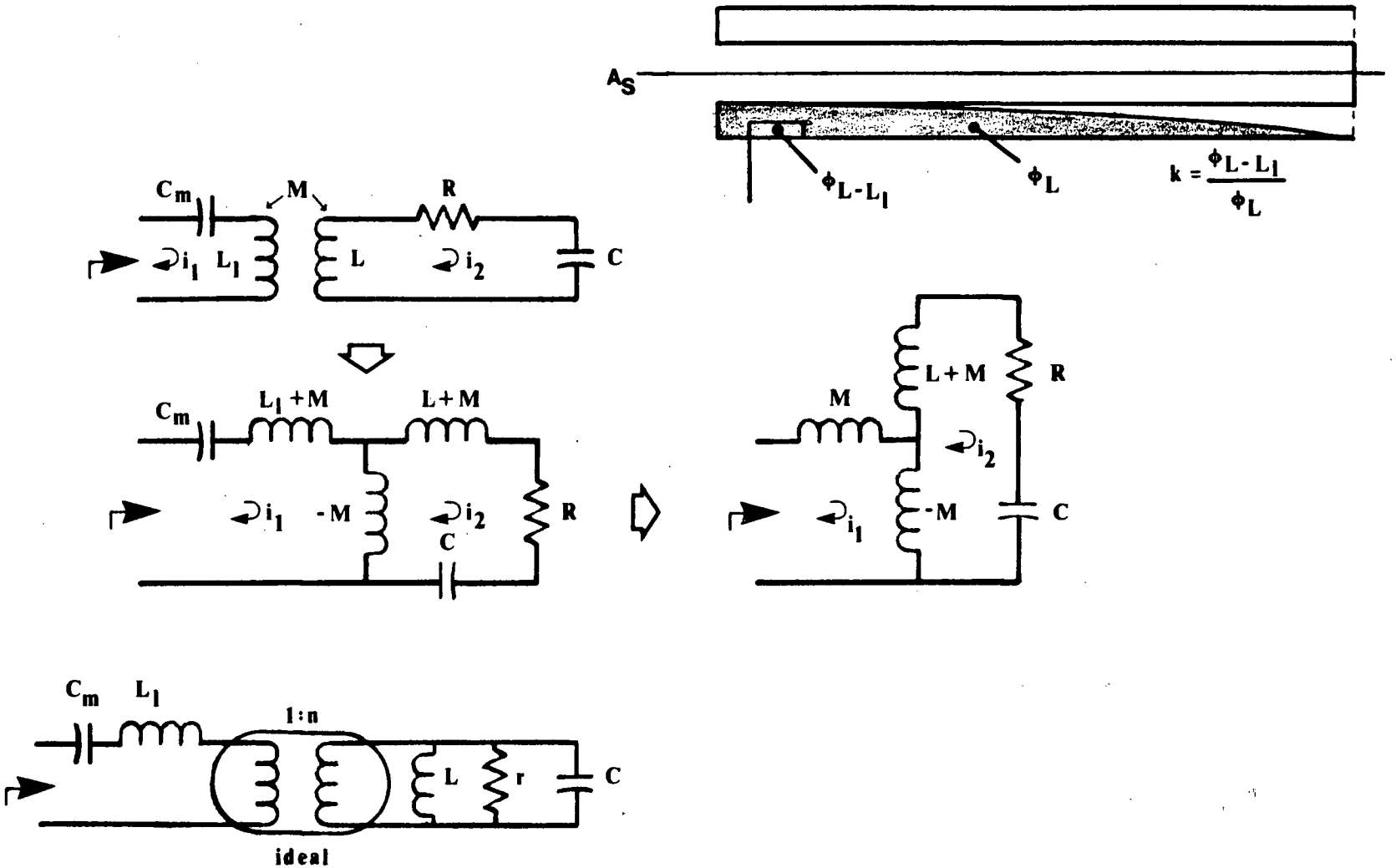

Fig. 3.8 An Equivalent Circuit Model for Loop Coupling to the Test Facility RF Cavity

The relative dee voltage is given by:

$$|T|^2 = |1 - \Gamma|^2 = \left| \frac{1 + j\,Q_L\,(f/f_o) - Q_L\,(f/f_o)}{1 + j\,Q_L\,(f/f_o)} \right|^2 \qquad (3.10)$$

Of particular interest is the relative amount of forward power required to develop a given dee voltage as a function of tuning error:

$$|1/T|^2 = 1/|1 - \Gamma|^2 \qquad (3.11)$$

These four relations (3.8, 3.9, 3.10, 3.11) are plotted in fig. 3.9 over a small range of frequencies near f_o. Each relation is shown for each of three values of loaded Q.

Measurement Techniques

Although good mathematical models are useful and necessary during the conceptual design stage, they are of limited usefulness if they are not complemented by good measurement techniques during the prototype and development stages. A brief outline of experimental techniques for measuring the parameters of a resonant cavity, including its resonant frequencies and its quality and coupling factors, are outlined in Appendix C. The methods developed by Ginzton [27] and updated by Kajfez and Hwan [28] are particularly useful.

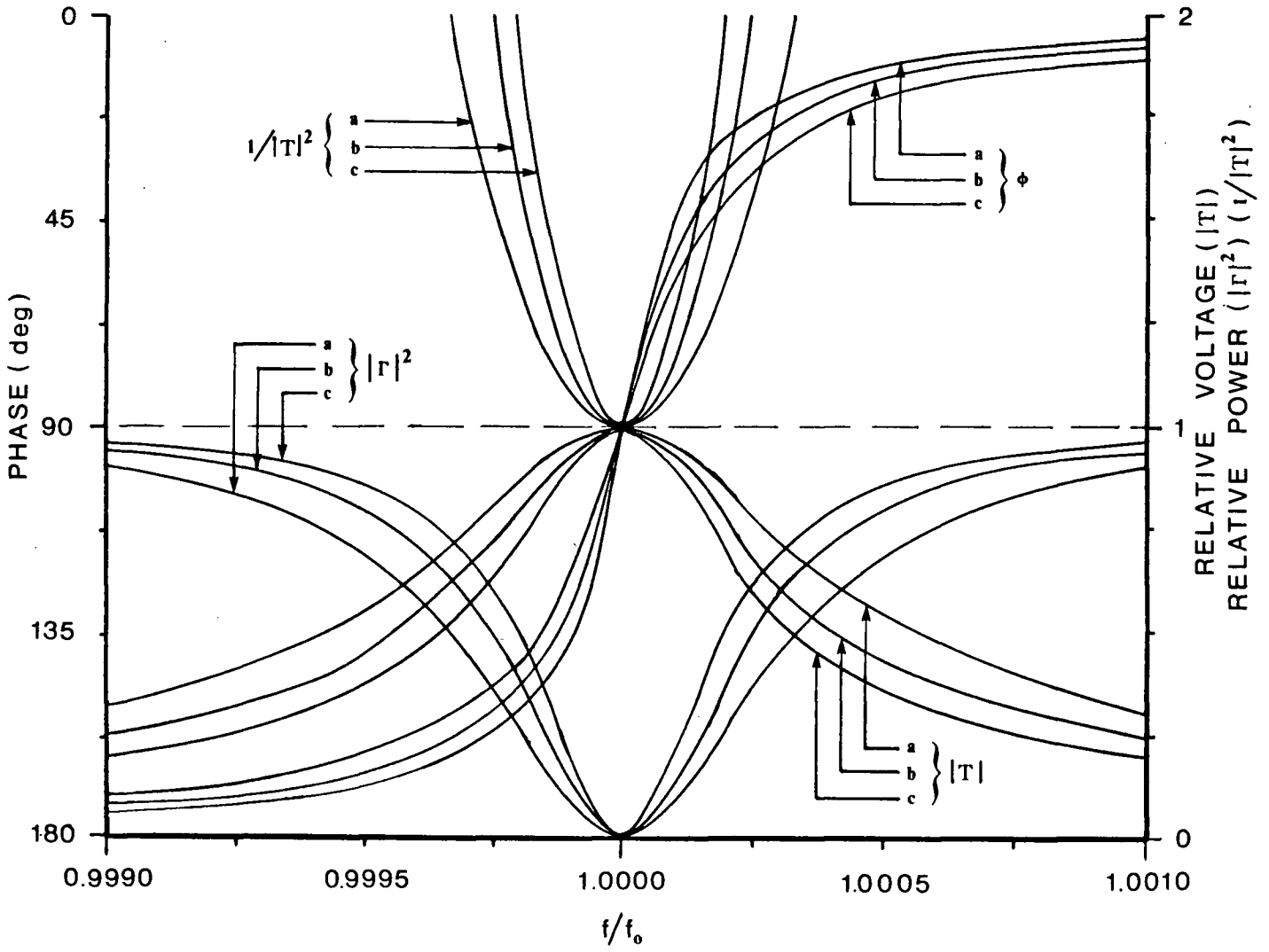

Fig. 3.9 Variation of Cavity Coupling Parameters Associated with a Cavity Tuning Error

see eqns (3.8) (3.9) (3.10) (3.11)

Q_L = (a) 3000 (b) 4000 (c) 5000

3.3 MECHANISMS FOR TUNING THE RADIO FREQUENCY CAVITY

3.3.1 Introduction

The cyclotron radio frequency cavity is a large and mechanically complex structure. It requires two sets of tuning mechanisms: one for coarse tuning under manual control, the other for fine tuning under automatic control. At present, very coarse tuning is provided from within the cyclotron vacuum tank by the strongback levelling arm adjusters and coarse tuning is provided from outside the vacuum tank by a set of ground arm adjusters. They are used to shift the resonant frequency of the cavity to within the range of the automatic tuning system. The automatic fine tuning system is used to suppress drifts in the resonant frequency of the cavity caused by thermal expansion and contraction of the cavity and variations in the pressure of the resonator cooling water.

Compensation for Disturbances to the Resonant Frequency of the Cavity

General

As the temperature of the cavity or the pressure of the cooling water in the cantilevered hot arms fluctuates, the resonant frequency of the cavity changes. The effect is especially pronounced when the resonator cooling water is first turned on, and when radio frequency power is initially applied to the cavity, causing it to heat up and expand.

The RF cavity presents an acceptable load impedance to the transmitter over a very narrow bandwidth for three reasons:

The transmitter cannot dissipate large amounts of reflected power for extended periods of time without lowering the final tetrode or triode's lifetime;

The transmitter's phase and amplitude response may be degraded when large amounts of power are reflected back to it [29]; and, most importantly,

The transmitter may not be able to deliver sufficient power to support the desired accelerating voltage when it is driving the cavity off resonance.

Experience has shown that most large and mechanically complex accelerator RF cavities, such as TRIUMF's, require some form of automatic control mechanism to suppress drifts in its resonant frequency. The accelerating cavities used in the National Synchrotron Light Source [30] at Brookhaven National Laboratory are classic examples of such cavities. The NSLS capacitively loaded $\lambda/4$ cavities are tuned by three separate tuning systems. Adjusting the temperature of the center electrode's cooling water causes the stem length to change, hence the gap capacitance and the cavity frequency. The back wall of the cavity (on which the center electrode is mounted) can be deflected by a pair of hydraulic rams called the crusher tuner which also adjusts the gap capacitance. The piston tuner that is mounted in the cylindrical wall of the cavity is used to displace the resonant mode's magnetic field.

TRIUMF's RF System

Following system start-up, the TRIUMF radio frequency

system is operated in self-excited mode, i.e. the frequency of the RF drive signal is made to follow the resonant frequency of the cavity until the RF cavity has achieved thermal equilibrium. This is accomplished either by configuring the system as a Barkhausen oscillator (see chapter four, section 4.1) or by adjusting the frequency of the master oscillator in such a way that the cavity tuning error signal (see eqn (3.8)), a measure of the difference between the natural frequency of the cavity and the driving frequency, is forced to zero. Free from constraints imposed by the relatively slow response of the mechanical cavity tuning actuators, one may operate the radio frequency system with negligible tuning error.

During normal cyclotron operation, the RF drive frequency is fixed at the fifth harmonic of the ion rotation frequency. Even after the cavity has reached thermal equilibrium, variations and fluctuations in the temperature and pressure of the resonator cooling water cause small disturbances to the cavity's resonant frequency which must be corrected to permit operation with a fixed frequency drive signal. When the radio frequency system is operated in **driven mode**, the RF control system must monitor the cavity tuning error signal and automatically re-tune the cavity as required. The high frequency components of the tuning error signal are rejected either by restricting the compensation bandwidth or, preferably, by low-pass filtering the tuning error signal.

Past Work

A number of mechanisms for automatic fine tuning of the cyclotron radio frequency cavity have been proposed for TRIUMF. Early work was reported by Grundman, Tillson, Bradley, Fredriksson, and Thomas [31] in their "Conceptual Design Study of RF Resonators for a 500 MeV H- Cyclotron" (1970) in which methods for tuning the cavity to the desired fundamental resonant frequency were first discussed. Prochazka [11], in his doctoral dissertation, "The Design of the RF System for the TRIUMF Cyclotron" (1972), was the first to consider methods for tuning the TRIUMF radio frequency cavity to resonance at the third harmonic of the fundamental driving frequency as well.

The cyclotron radio frequency system was commissioned in late 1974. Pneumatically actuated bellows in the root of the resonators were used to tune the cavity initially but had to be removed from service about a year later when they began to fail. In the existing automatic cavity tuning system, the resonant frequency of the cavity is adjusted by varying the pressure of the resonator cooling water. Neither the original system nor the existing system have provision for making the RF cavity harmonically resonant - they can only tune the cavity for operation with either the fundamental or the third harmonic mode but not both simultaneously. The original analog tuning controller, which was described by Brackhaus [12], is still in service; its output section was modified to permit it to drive the

resonator cooling water pressure control valve rather than the pneumatic tuning system. The existing system has performed in a satisfactory way for over a decade but will be replaced by a more robust tuning mechanism with a greater tuning range when new resonator segments are installed in the cyclotron during phase two of the RF resonator replacement program.

In 1983, with renewed interest in third harmonic flat-topping, new schemes for third harmonic cavity tuning were proposed for TRIUMF by Susini [32], Lanz [33], and Worsham [34]. These schemes are being evaluated on the 1:10 scale model and the RF systems test facility.

3.3.2 Selection Criteria for Cavity Tuning Schemes

The criteria for selecting a particular cavity tuning scheme over another divide into three categories:

1. The scheme must shift the resonant frequency of the cavity over a sufficient range to compensate for the normal drifts and disturbances present after the cavity has reached thermal equilibrium;
2. The tuning scheme must not signficantly affect the shape of the dee voltage profile. It has been suggested that a 2 dB increase in the voltage standing wave ratio is a reasonable working specification although ideally it will be far less. It is particularly important that the dee voltage profile does not change as the cavity is tuned because this would introduce a disturbance to the radial position of the extracted turn (increasing its effective radial width) that

would be very difficult to compensate for; and,

3. The mechanism should be mechanically simple and reliable given the high radiation environment and the restricted access to the cyclotron. It should be easy to install and service, preferably using remote handling equipment.

The third criterion is particularly difficult to satisfy and has, thus far, held up the final selection of the fundamental and third harmonic tuning mechanisms that will be incorporated into the new resonator design.

Possible Tuning Schemes

The tuning schemes suggested to date constitute a nearly complete list of the reasonable options. They can be divided into four basic categories:

1. Perturbing the cavity with special hardware mounted inside the cavity:
   a. the pneumatic root tuning foils that were originally installed in the cyclotron; and,
   b. the tuning diaphragms and similar structures proposed by Prochazka [11];
2. Perturbing the cavity with special hardware mounted outside the cavity:
   a. deflecting the dee liner near the tip, as can currently be done manually with sixty four "ground arm adjusters" mounted on either side of the dee gap on the top and bottom of the vacuum tank; and,
   b. deflecting the dee liner near the third harmonic

magnetic or electric field strength minima, as proposed by Worsham [34];

3. Perturbing the cavity by indirect means:
   a. varying the pressure and/or temperature of the resonator cooling water, as is currently done in the cyclotron; and,
   b. varying the temperature of the strongback levelling arm support with a heating coil, causing the tip of the cantilevered panel to rock up and down, as suggested by Dohan [35];
4. Detuning the main cavity by a closely coupled parasitic cavity, i.e. the tuning stubs proposed by Prochazka [11], Susini [32], and Lanz [33].

Prochazka [11] concluded that capacitively coupled tuning stubs were probably not suitable for tuning the fundamental mode of the TRIUMF RF cavity because the voltage profile along the accelerating gap was highly disturbed near the location of a stub. Use of tuning stubs for tuning the third harmonic mode has been investigated on the 1:10 scale model of the TRIUMF RF cavity by Lanz [33] and Pacak [36]. Unlike the other cavity tuning schemes that have been proposed, a tuning stub can shift the resonant frequency of the third harmonic mode without noticeably affecting the fundamental mode. Lanz and Pacak have confirmed that the tuning stub can adversely affect the uniformity of the dee voltage profile but the effect may be tolerable if a sufficient number of stubs are distributed along the length

of the cavity. Lanz suggested that four tuning stubs would keep the voltage variation below 2 dB. Recent results (October 1985) obtained by Pacak [36] show little effect on the voltage profile and are generally very encouraging.

Based on tests conducted using half scale models of the resonator segments, Prochazka [11] concluded that only tuning by dee-liner tip deflection or root tuning bellows satisfied the specified tolerances on:

a. the variation of the voltage along the accelerating gap; and,

b. the cavity's quality factor.

Although a tuning method based on ground arm tip deflection would normally be preferred because it offers a larger tuning range, **"for engineering reasons and because of possible problems with RF flat-top operation,"** he recommended that tuning using pneumatic bellows be adopted. Unfortunately, the pneumatic bellows failed after about a year of cyclotron operation and had to be taken out of service.

Interest in tuning the cavity by deflecting the dee liner at the tip and at the third harmonic magnetic or electric field minima stems from:

a. the mechanical simplicity of the scheme;

b. the ease with which the tuning mechanism can be distributed along the cavity to prevent unwanted variations in the dee voltage profile; and,

c. the reliable operating record that has been compiled by the stepping motor system that was installed to deflect selected dee-liner tips by remote control from the RF console.

The dee-liner deflection scheme has been implemented on the RF systems test facility for evaluation.

3.3.3 Analysis of the Dee Liner Deflection Tuning Scheme

The design of the dee-liner deflection tuning scheme is based on a simple application of perturbational methods that are used to calculate changes in the resonant frequency of a resonant cavity due to small changes in the material contained by the cavity or small deformations of the cavity wall, such as those described by Harrington [37]. The change in the resonant frequency of a cavity whose walls have been deformed can be estimated by:

$$\frac{\omega - \omega_o}{\omega_o} \qquad \frac{\Delta W_m - \Delta W_e}{W} \tag{3.12}$$

where ΔW_m and ΔW_e are the time-average electric and magnetic energies contained in the volume removed by deformation and W is the total energy stored in the original cavity whose resonant frequency is given by ω_o [37].

Inspection of the above relation shows that an inward deflection of the cavity wall will raise the resonant

frequency of the cavity if it is made at a point of large **H** and will lower the resonant frequency if it is made at a point of large **E**.

The dee-liner deflection scheme is shown schematically in fig. 3.10. To get the largest effect for a given deflection, the deflection points should be located at field maxima or minima. There are four "best" locations for tuning by cavity wall deformation. In the discussion that follows, a deflection is assumed to be inward unless otherwise noted:

1. Deflection of the root of the cavity will cause both the fundamental and third harmonic frequencies to increase because the root is a magnetic field maximum and electric field minimum for both modes;
2. Deflection of the dee-liner at the tip will cause both the fundamental and third harmonic frequencies to decrease;
3. Deflection of the dee liner about one metre from the root will cause the fundamental frequency to increase slightly since the fundamental magnetic field energy density is slightly larger than the electric field energy density. The third harmonic frequency will decrease, however, because at this point, the third harmonic electric field is maximum strength and the magnetic field is zero; and,
4. Deflection of the dee liner about 1 metre from the tip will have precisely the opposite effect as above - the fundamental frequency will decrease slightly and the third harmonic frequency will increase.

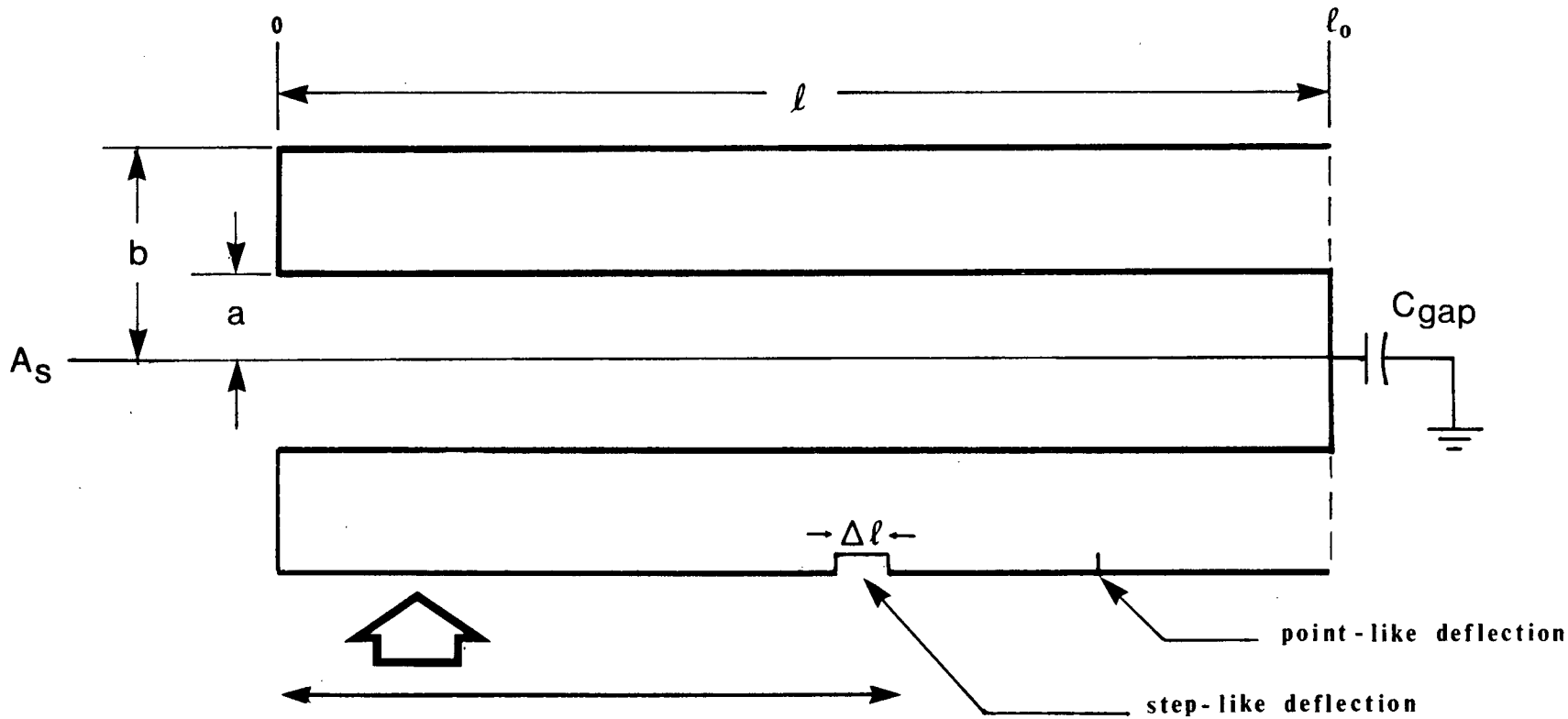

Fig. 3.10 A Perturbation Model for Cavity Tuning by Dee Liner Deflection

If the displaced volume is of small extent, one can approximate the displaced W's by $\Delta\tau$ times the energy densities w at the position of the deformation. The total W can also be written as τ times a space-average energy density w. Thus, following Harrington [37], the above equation can be re-written:

$$\frac{\omega - \omega_o}{\omega_o} \cong \frac{(w_m - w_e)\ \Delta\tau}{w\ \tau} = \frac{C\ \Delta\tau}{\tau} \qquad (3.13)$$

where C depends only on the cavity geometry and the position of the perturbation.

The parameter C was calculated for both the fundamental and third harmonic modes as a function of position along the axis of a simplified model of the cavity for both a point-like and a step-like deflection. As noted earlier, the energy stored in the gap capacitance is quite small compared to the electric field energy stored in the rest of the cavity (less than 5%) so, to simplify the calculation, it was neglected. The calculation of the parameter C was made for a quarter-wave stub terminated by an ideal open circuit. The expressions for the cavity tuning factor as a function of position and displacement are presented in Table VI. The results are presented in figs. 3.11 through 3.13. Inspection of fig. 3.11 shows the four optimum locations for tuning by dee-liner deflection, i.e. those locations where a given deflection results in the greatest frequency change.

TABLE VI

EXPRESSIONS FOR CAVITY TUNING FACTOR
AS A FUNCTION OF DEFLECTION POSITION

POINT-LIKE DEFLECTION - FUNDAMENTAL MODE $$C_1(\ell) = \frac{1 - (a/b)^2}{2\ \ln(b/a)} \cos(2\beta\ell)$$
POINT-LIKE DEFLECTION - THIRD HARMONIC MODE $$C_3(\ell) = \frac{1 - (a/b)^2}{2\ \ln(b/a)} \cos(6\beta\ell)$$
STEP-LIKE DEFLECTION - FUNDAMENTAL MODE $$C_1(\ell,\Delta\ell) = \frac{1 - (a/b)^2}{2\ \ln(b/a)} \cos(2\beta\ell) \ \frac{\sin(\beta\Delta\ell)}{\beta\Delta\ell}$$
STEP-LIKE DEFLECTION - THIRD HARMONIC MODE $$C_3(\ell,\Delta\ell) = \frac{1 - (a/b)^2}{2\ \ln(b/a)} \cos(6\beta\ell) \ \frac{\sin(3\beta\Delta\ell)}{3\beta\Delta\ell}$$

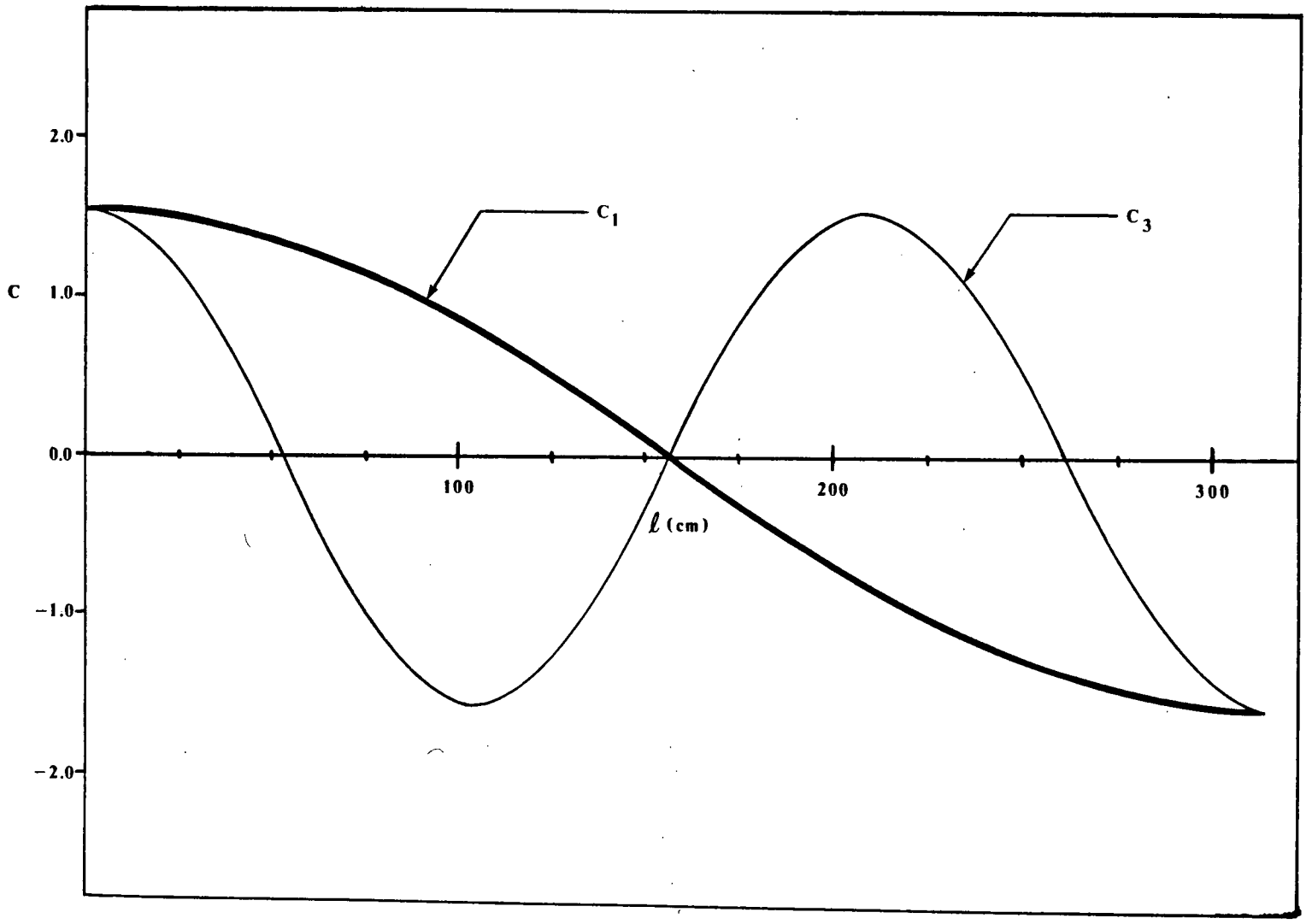

Fig. 3.11 Cavity Tuning Factor as a Function of Deflection Position - Point-Like Deflection

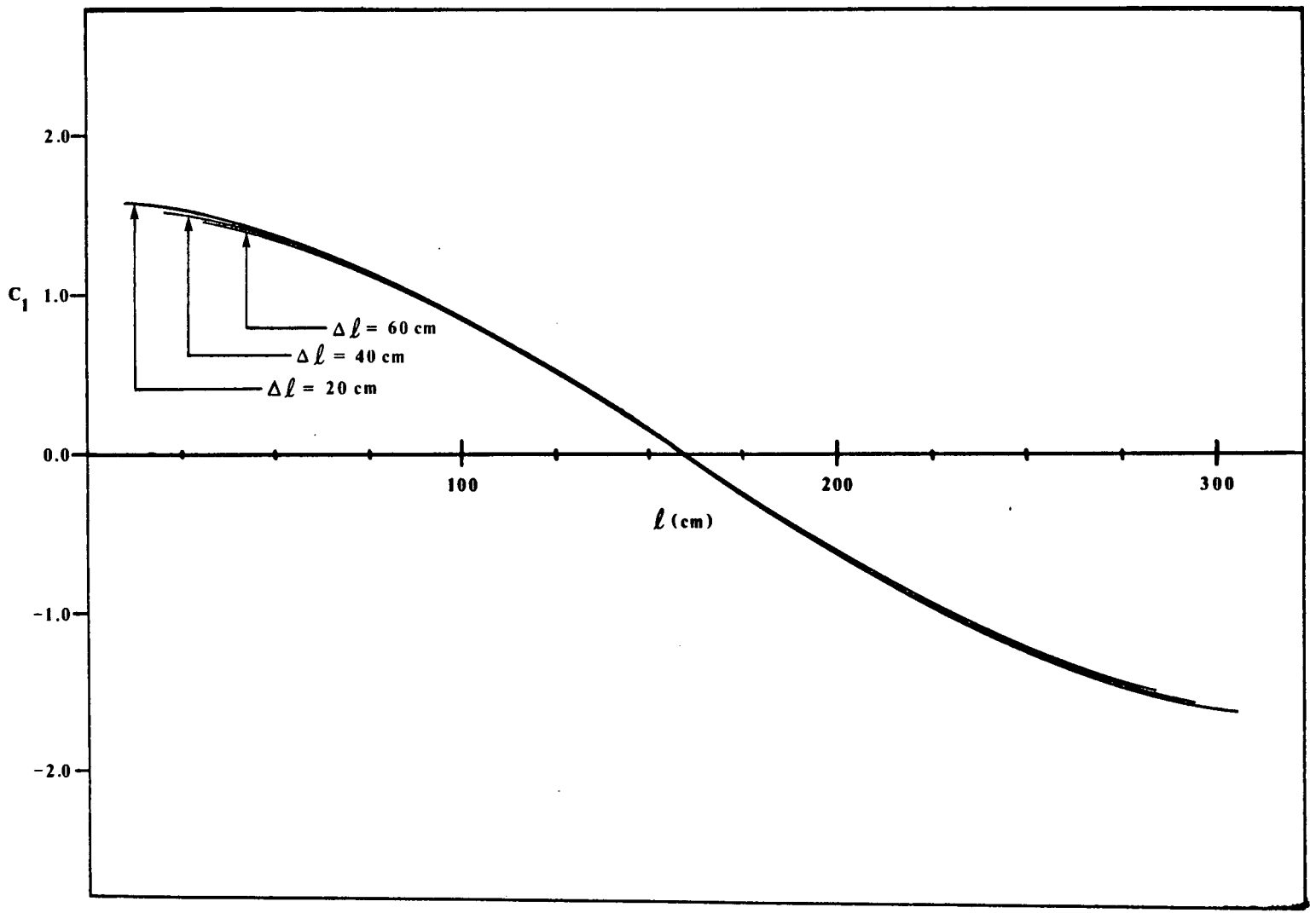

Fig. 3.12 Cavity Tuning Factor as a Function of Deflection Position - Step-Like Deflection (Fundamental Mode)

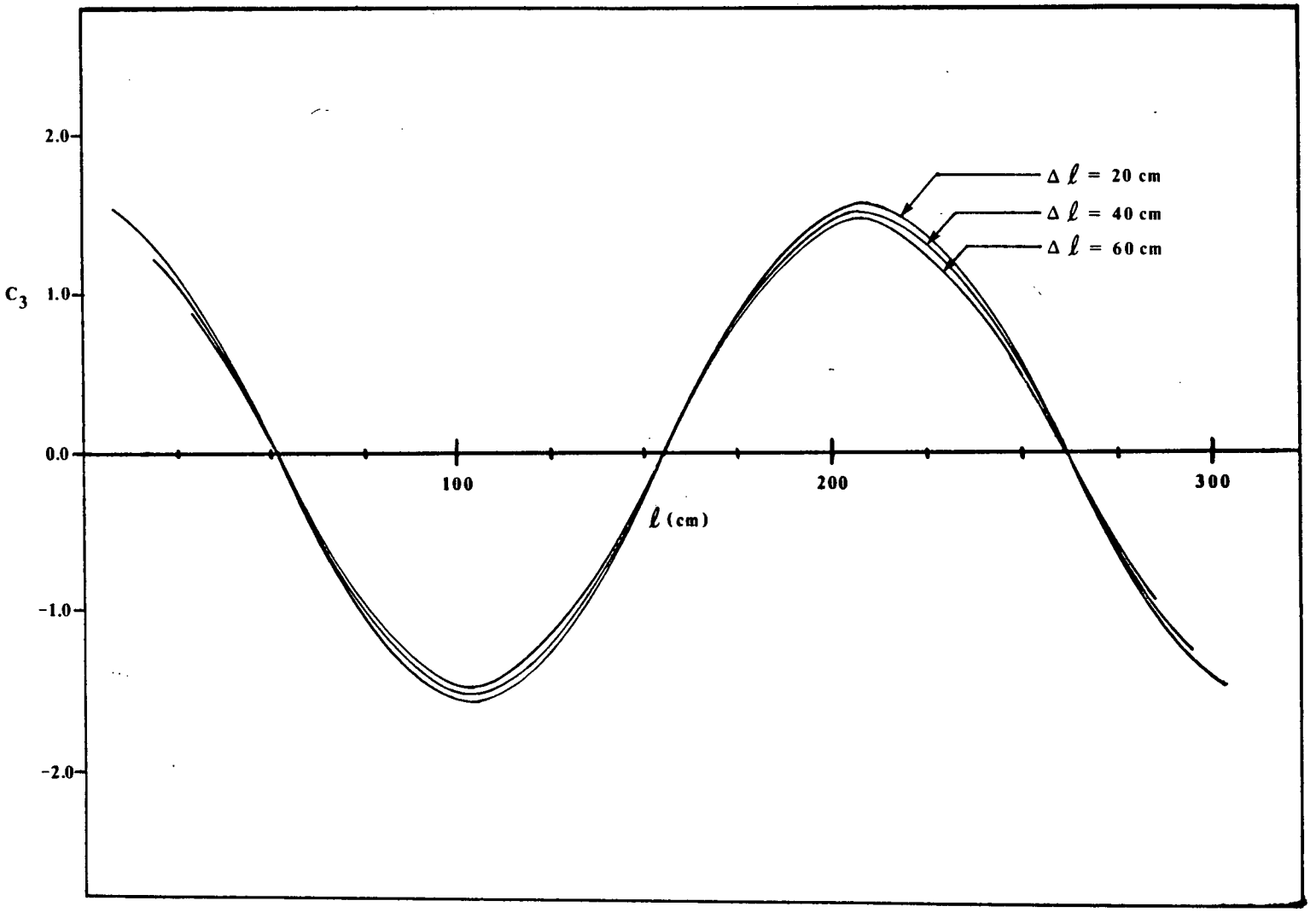

Fig. 3.13 Cavity Tuning Factor as a Function of Deflection Position - Step-Like Deflection (Third Harmonic Mode)

3.3.4 Implementation of the Dee Liner Deflection Tuning Scheme

Although the tuning scheme that will be incorporated into the design of the new resonators has not yet been selected, it is fairly certain that the RF cavity will be tuned to the correct fundamental frequency either by:

a. deflecting the dee-liner tip; or,

b. deforming the segment root.

The RF cavity will then be tuned to the correct third harmonic frequency either by:

a. deflecting the dee-liner at the third harmonic electric or magnetic field minima and readjusting the tip or root as required; or,

b. tuning a third harmonic parasitic cavity/tuning stub(s).

Root Tuning

It is not possible to deflect the dee-liner near the root for obvious mechanical reasons. If root tuning was adopted for the replacement resonator segments, a special root piece would have to be developed. Given the high surface current densities in the root of the cavity, the resulting heating and mechanical stress on the mechanism, and the reliability problems that made it necessary to remove the original root tuning system from service, interest in this option has been subdued.

Tip Tuning

When the cyclotron was constructed, provision was

included for manually adjusting the position of the dee-liner tips of resonator segments two through nine for coarse tuning of the cavity's resonant frequency. The adjustment is made by turning a ground arm adjustment mechanism that is attached to the dee liner through a vacuum bellows and the mount for the dee voltage probe.

When Poirier [38] found that the position of the dee liner tips of the number eight resonator segments was critical for successful operation of the radio frequency system, the lower number eight resonator tip adjusters (four in all) were motorized to permit them to be adjusted from the RF console in the RF room. Their record of reliable performance over the past several years has increased interest in using this technique in the new automatic tuning system and led to its implementation for evaluation on the RF systems test facility.

The geometry of the accelerating gap in the cyclotron is shown in fig. 3.14. The position of the dee voltage probe mount is also shown. The z-foil connecting the ground arm/dee-liner to the center probe housing allows the tip to be deflected up to 1.5 centimetres with only reasonable effort. Such a wide range of movement permits one to compensate for misalignment of the cantilevered dee by maintaining a uniform dee to liner spacing or to tune the cyclotron RF cavity.

A similar scheme was installed on the RF systems test

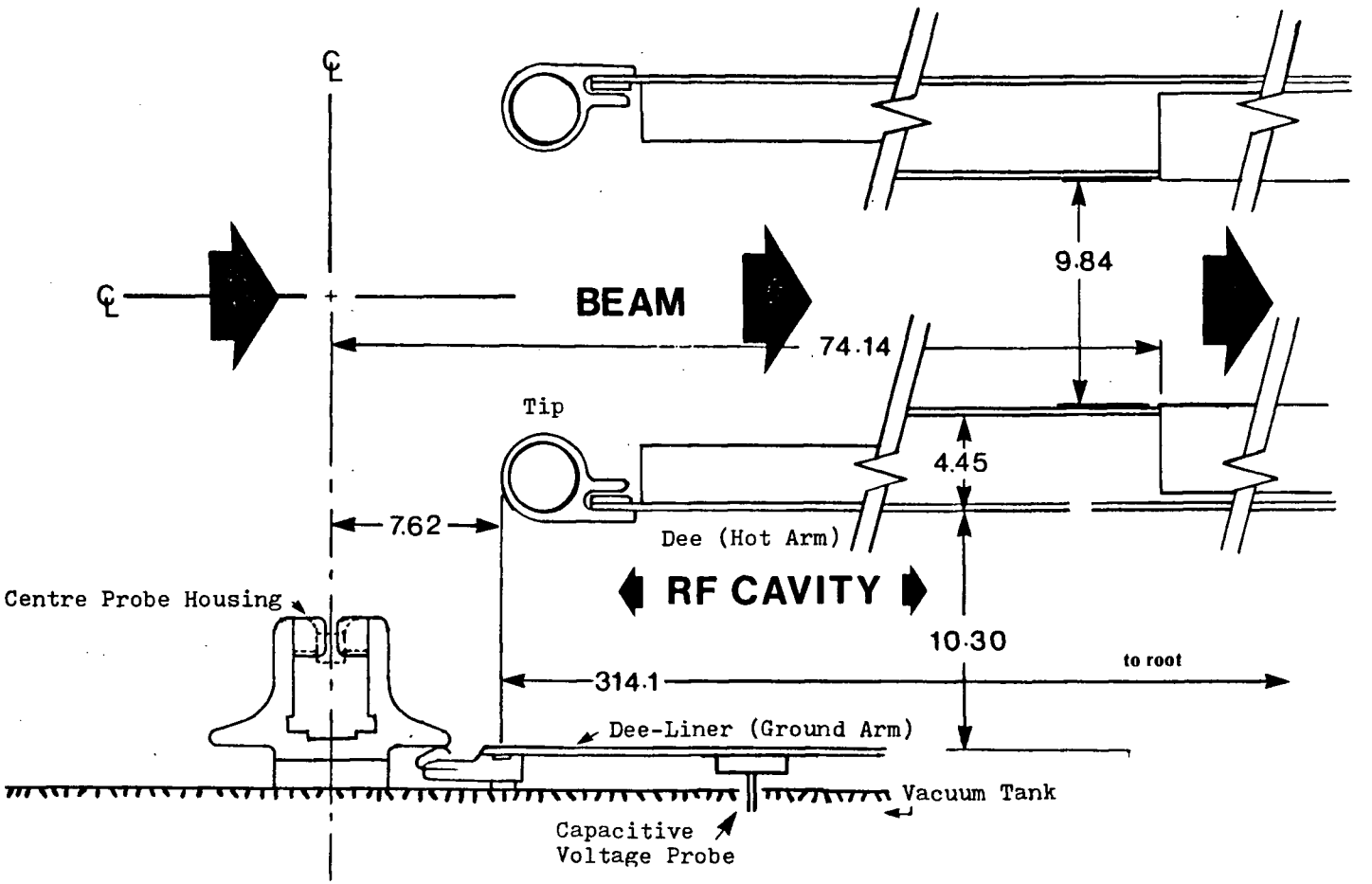

Fig. 3.14 RF Cavity Geometry - Dee Tip Region cf. Fig. 2.1

All dimensions in centimetres

facility. The stepping motors that move the dee tips inwards and outwards can be controlled manually or automatically by a stepping motor controller developed at TRIUMF and based on the TRIMAC auxiliary processor [39] for CAMAC systems. Commands and data are passed between the local control processor and the stepping motor controller through a set of CAMAC addressable registers referred to as a CAMAC memory.

Third Harmonic Tuning

Ideally, one would deflect the middle of the dee-liner using a scheme similar to that used for tip deflection. This would involve cutting new vacuum ports in the cyclotron vacuum tank near the desired deflection points. Inspection of fig. A.3 in Appendix A shows that the spiral sectors of the main magnet yoke block access to the mid parts of the cavity, effectively preventing one from adopting such a direct approach.

An alternative scheme was developed which permits the access port to be located at a more convenient location. The middle of the dee-liner is deflected by the wedge-roller illustrated in fig. 3.15. The 10:1 slope on the wedge causes the dee-liner to be pushed in 6 mm over the 60 mm that the wedge can travel. In practice, deflections of less than 2 mm were found to be adequate for obtaining the desired ratio of third harmonic frequency to fundamental. A spring is used to restore the panel to its original position

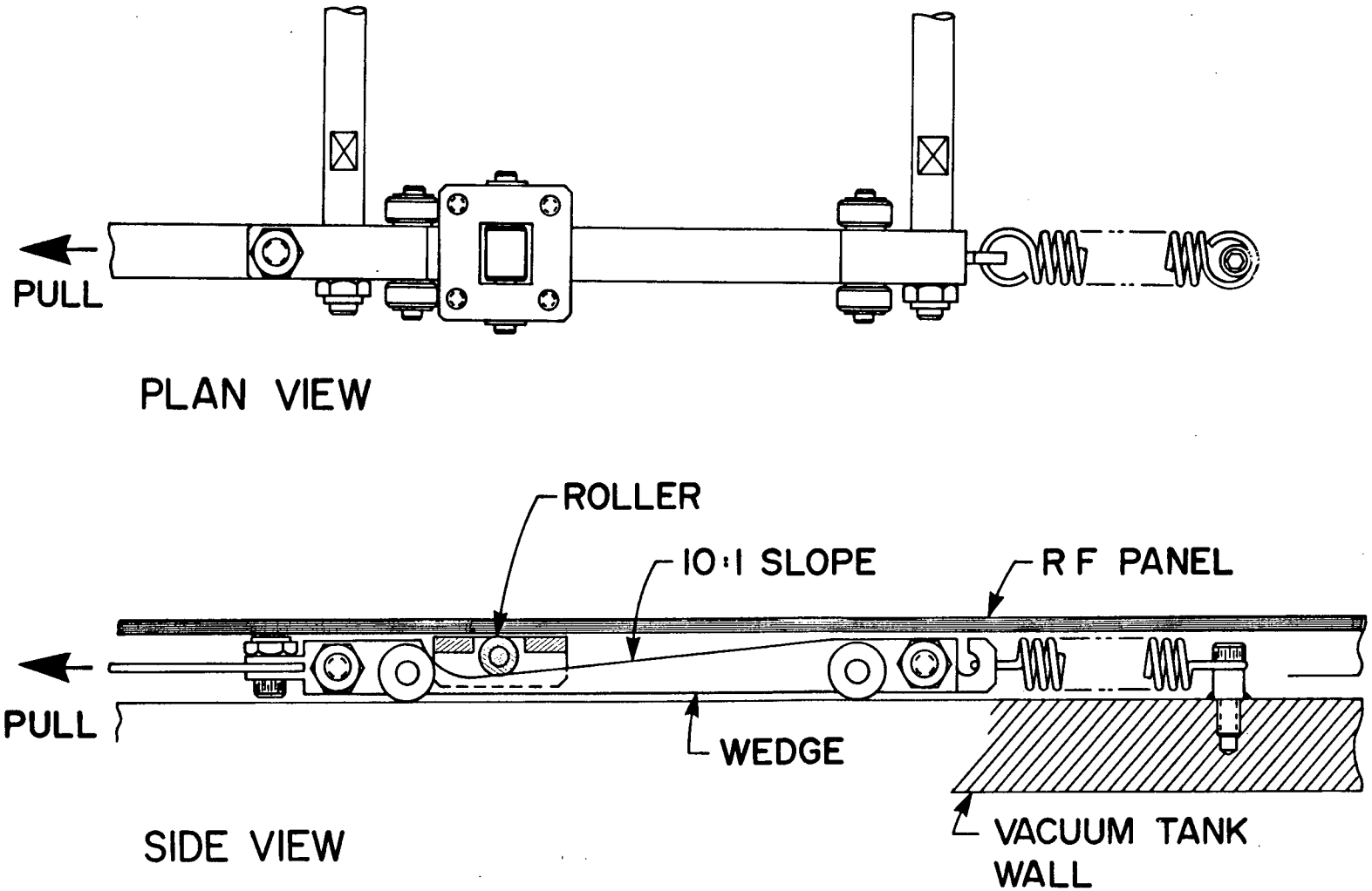

Fig. 3.15 Mechanism for Dee-Liner Deflection

as the roller is released. The force required to deflect the panel was not insignificant but was easily handled by the stepping motor used to pull the wedge.

At the present time, there are no plans to build and test an inductively coupled third harmonic tuning stub for the test facility cavity.

Tuning Range

The tuning range of the prototype tuning scheme with the resonator cooling water pressure off and on is presented in figs. 3.16 and 3.17. A diagonal line indicates the desired 3:1 tuning ratio.

The resonant frequencies were determined by measuring transmission through the cavity with an RF network analyzer. The network analyzer source and receiver were loosely coupled to the cavity through a small ($1cm^2$) loop in the root of the cavity and one of the capacitive dee voltage probes mounted in the tip of the dee-liner. Maximum transmission occurs, of course, when the frequency of the network analyzer source coincides with the natural frequency of the cavity. By measuring the transmission bandwidth for a given mode and applying the relation:

$$Q_o = \left. \frac{f_o}{\Delta f} \right|_{3\ dB} \tag{3.14}$$

one may obtain the unloaded Q.

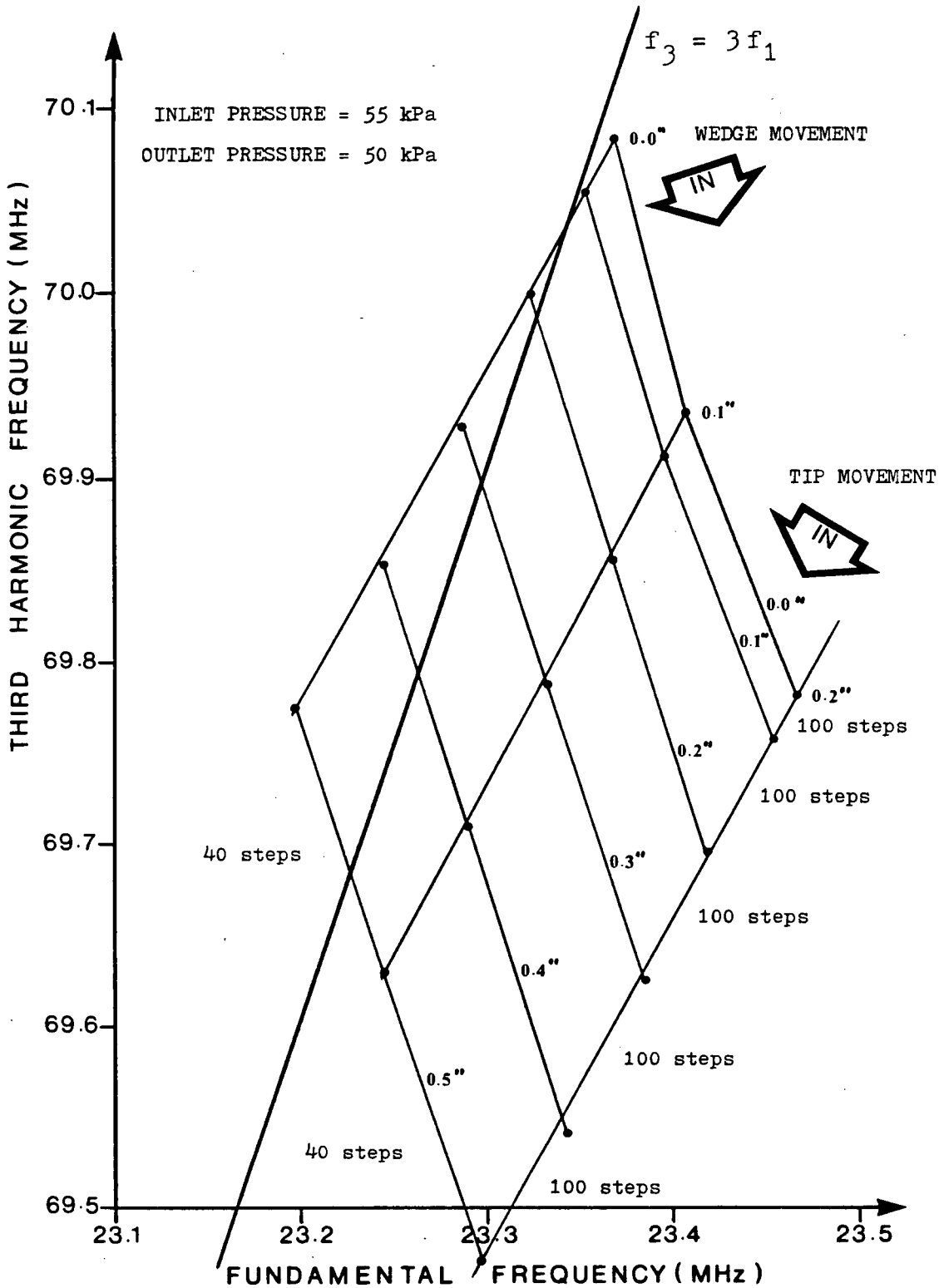

Fig. 3.16 Test Facility Cavity Tuning Range - Low Water Pressure

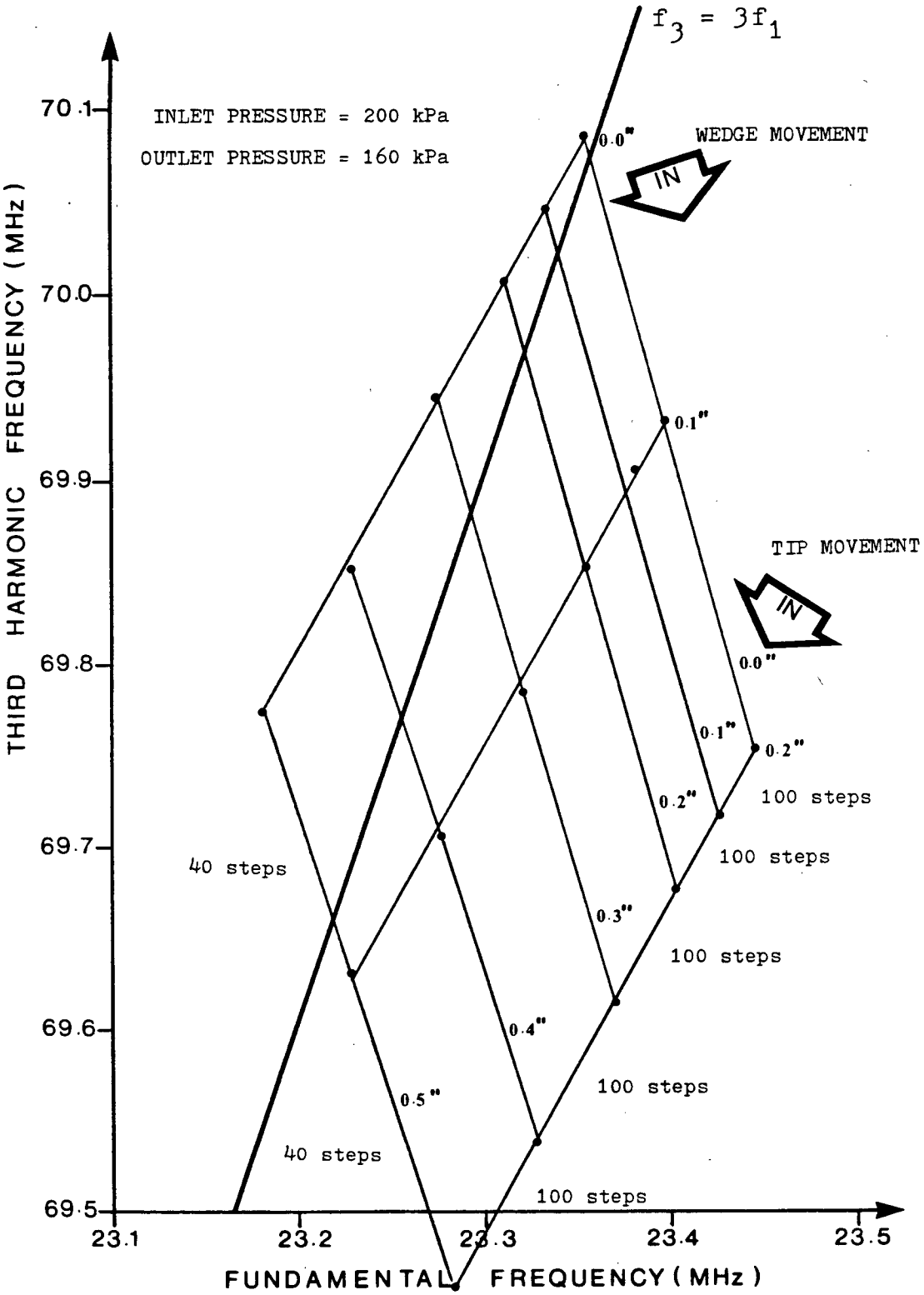

Fig. 3.17 Test Facility Cavity Tuning Range - High Water Pressure

Start-up and Tuning Control

By adjusting the resonator tuning elements while observing the network analyzer display, it was possible to tune the cavity to resonance at both the desired fundamental frequency and its third harmonic while the cavity was at atmospheric pressure and driven with low power. Such a scheme is impractical when the cavity is evacuated and substantial amounts of power are applied to it because of:

a. the cavity's relatively high quality factor and problems associated with maintaining the desired accelerating voltage if the RF power amplifiers are driven into a poorly matched load; and,

b. resonant secondary electron emission, commonly referred to as "multipactoring", a discharge phenomena that sets a **lower** limit to:

   i. the radio frequency potential that can be maintained between two electrodes in a vacuum;

   ii. the rate at which the resonator voltage must rise in order to successfully pass through the multipactor discharge range.

These problems have been recognized for some time, of course. Riedel [40] reported that during the commissioning of the 37-inch cyclotron (1938), **"it soon became apparent that a high energy storage, high Q dee which frequently sparked did not look like an antenna load and different methods had to be found to drive it."** Since then,

methods and procedures for safe and reliable operation of cyclotron RF systems have been developed. Based on experience with the procedure currently used on the TRIUMF cyclotron, a special cavity start-up and tuning procedure was developed to flat-top the accelerating voltage in the RF test facility cavity, as described in section 3.5.

3.4 COUPLING POWER INTO THE RADIO FREQUENCY CAVITY

3.4.1 Introduction

A general review of the analysis of resonant cavities and cavity-coupling systems as microwave circuit elements was presented by Beringer [41]. Design formulas for coupling circuits for accelerator RF cavities were presented by Botha and Van der Merwe [42] and Pogue and Buskirk [43]. Power can be coupled to the accelerating modes in the radio frequency cavity through either magnetic or electric coupling. In practice, both methods have been shown to be practical and reliable. The choice is dictated mainly by the available space. With electric coupling, the RF power tube should be close to the accelerating electrodes whereas magnetic coupling requires that the coupling loop be close to the short. Susini [47] considers magnetic coupling to be preferable for two reasons: the voltages encountered in the vicinity of the loop feedthrough are smaller than in the case of a coupling capacitor feedthrough and therefore place less stress on the vacuum seal and, the power amplifier can be assembled and tested independently of the RF cavity.

Regarding the first point, experiences at TRIUMF during the commisioning of several high power RF systems over the past fifteen years have shown that mechanical failure of the ceramic vacuum seal that separates the RF cavity from the rest of the transmission line can cause a great deal of trouble.

The 23 MHz power source is loop-coupled to the cyclotron RF cavity for convenience. Not only did loop coupling permit the four 400 kilowatt amplifiers (see Appendix B) to be tested independently of the rest of the RF system during construction but it also minimizes the problems associated with a failure of one of the power amplifiers during normal operation. The amplifier in question can be taken out of service and cyclotron operation restored while repairs are in progress by boosting the output of the remaining three amplifiers. If the RF power amplifiers were capacitively coupled to the RF cavity and therefore situated in the cyclotron vault, radiation problems would make it difficult to implement this solution.

The third harmonic and RF deflection systems have sufficiently small power requirements (less than 100 kilowatts) that a transmitter based on a single RF power tube can easily supply the required power. While electric coupling is a possibility in such cases, magnetic coupling permits RF power amplifiers to be tested and their performance verified independently of cyclotron operating schedules. This simplifies the repair and maintenance

problem and also permits one to reduce development time by using power amplifiers purchased from external suppliers.

In the TRIUMF cyclotron, fundamental power is coupled into the RF cavity through a coupling loop mounted in the ground panel (dee liner) of resonator segment 3L3. The location "3L3" identifies a particular resonator segment among the eighty that make up the RF cavity:

a. 3 refers to the third quadrant - the south-west corner of the cyclotron;

b. L refers to the Lower half of the cavity - the half mounted on the floor of the vacuum tank;

c. 3 refers to the third resonator segment from the middle of the dee, i.e. the cyclotron center post and the central region, where the eight "number ten" resonator segments are those attached to the cavity flux guides.

During construction of the cyclotron, provision was made for mounting a third harmonic coupling loop in the ground panel of resonator segment 4L3. Some aspects of the design of the fundamental and third harmonic coupling loop assembly were presented by Prochazka [11] but they were mostly concerned with power loss in the coupling loop and the ceramic vacuum seal.

In this section, guidelines for the mechanical design of a high power coupling loop are reviewed and design criteria for the optimum size and location of the

fundamental and third harmonic coupling loops for the RF cavity are considered.

3.4.2 Design Criteria - The Coupling Loop

The problem of designing a loop to critically couple a transmission line to a high power radio frequency accelerating cavity is a familiar one that is easily solved. Given the resonant mode's field distribution, the size of the loop that will give critical coupling can be calculated by considering the mutual inductance between the loop and the resonant mode and the quality factor of the mode. The loop and the cavity form an autotransformer that reduces the shunt impedance of the cavity seen by the transmission line from several hundred thousand ohms to approximately 50 ohms as required for critical coupling to a 50 ohm transmission line.

A boiler plate model of the loop can then be constructed and its dimensions checked with the assistance of a network analyzer that displays the reflection coefficient S_{11} on a polar display. Once the dimensions of the loop have been verified with the boiler plate model, a final version of the loop can be constructed which will usually incorporate:

a. a ceramic vacuum seal to partition the high vacuum of the cavity from the air filled transmission line; and,

b. water cooling of the loop and portions of the inner conductor of the transmission line that are exposed to vacuum.

Because high currents are passed through the loop, the electrical connections between the mechanical components that make up the loop must be excellent. The components are soldered together wherever possible. Silver solder is preferable to soft (tin-lead) solder because soft solder tends to sputter in environments combining high vacuum and high voltages.

In a transmission line, the current on the inner conductor is uniformly distributed around its circumference.

On the coupling loop, however, this is not the case. Just as in the two wire transmission line, the bulk of the current is concentrated on the inner surfaces of the loop. If the loop is manufactured from cylindrical stock, this can lead to intense local heating.

The portions of the coupling loop that are perpendicular to the walls of the cavity are usually just extensions of the inner conductor of the transmission line and are manufactured from cylindrical stock. The portion of the coupling loop that is parallel to the cavity wall is usually a flat plate having a width comparable to the diameter of the inner conductor. Cooling water enters the

loop through the short and travels through a channel along the inside of the inner conductor and the top of the plate then on to the far end of the loop. It makes its return trip along basically the same path. The cooling water outlet is located next to the inlet. In practice, water cooling of the coupling loop is generally not required when less than about ten thousand watts of power are coupled through the loop if alternative heat evacuation paths are present.

Experiences at TRIUMF and elsewhere have shown that the coupling loop is often particularly susceptible to multipactoring. This problem has been solved in SIN's third harmonic RF cavity [45] by situating the coupling loop in a ceramic cup which partitions the vacuum in the cavity from the air-filled transmission line and coupling loop assembly. The structure has proven to be quite reliable and might be worth adapting for use at TRIUMF.

3.4.3 Design Criteria - Loop Location

The optimum location for a critically coupled loop, i.e. the location that will give the smallest loop, therefore the lowest Joule losses and the smallest loop self-inductance, is in the region that has the highest magnetic flux density. In the TRIUMF radio frequency cavity, this would place the coupling loop for fundamental at the root of the cavity where for a dee voltage of 100 kilovolts the maximum magnetic field strength is approximately 2.5 kiloamperes/metre. There are two such

optimum locations for a third harmonic loop. One is at the root of the cavity, where for a dee voltage of 11 kilovolts, the maximum magnetic field strength is 0.25 kiloamperes/metre and the second is one half of a wavelength closer to the tip, where the magnetic field strength has a second maximum of 0.25 kiloamperes/metre.

In general, the position of the coupling loop in a single mode cavity is not critical. The selection of a loop mounting location depends mostly on mechanical convenience and ease of access. An additional selection criterion becomes important when one considers the case of a cavity that supports two modes and therefore requires two coupling loops. The addition of a second coupling loop makes the cavity a two-port system (see fig. 3.18) and raises the possibility of power from one transmitter being coupled through the cavity and into the transmission line supplying power from the second transmitter. This is clearly an undesirable situation. Following Beringer [41], the transmission-loss function $T(\omega)$ for the equivalent circuit in fig. 3.18 is given by:

$$T(\omega) = \frac{4\,\beta_1\,\beta_2}{(1 + \beta_1 + \beta_2) + Q_0^2\,(\omega/\omega_o - (\omega_o/\omega)^2} \qquad (3.15)$$

If one port is critically coupled and the cavity is driven at resonance, then transmission through to the other port is given by:

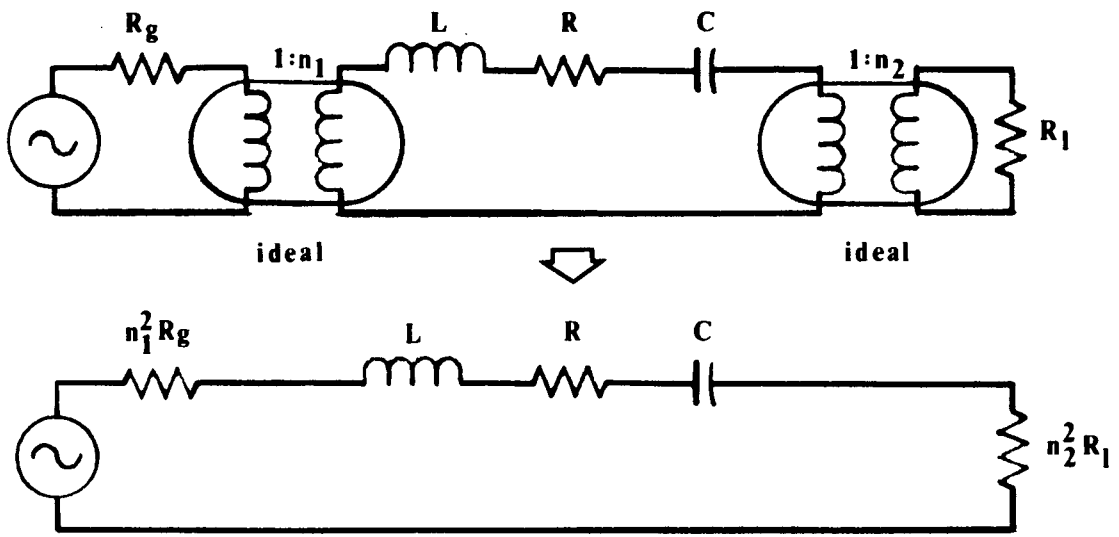

Fig. 3.18 An Equivalent Circuit Model for Transmission Through the Test Facility Cavity

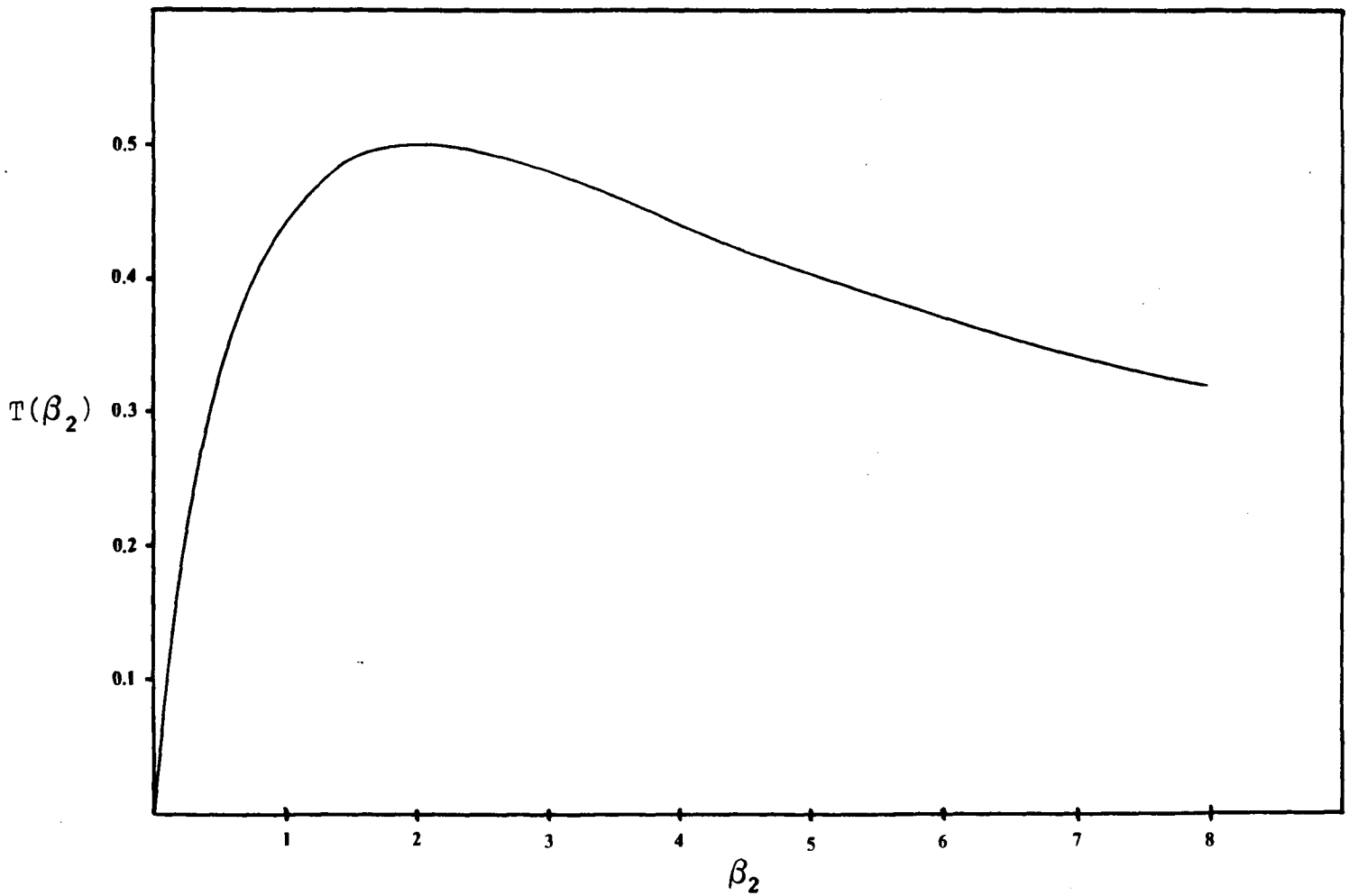

Fig. 3.19 Transmission Through a Critically Coupled RF Cavity as a Function of the Cavity Coupling Factor of the Second Port Equation (3.16)

$$T(\beta_2) = 4\beta_2 / (2 + \beta_2)^2 \tag{3.16}$$

where β is the input/output coupling parameter given by:

$$\beta = n^2 Z_o/R \tag{3.17}$$

Although the coupling loop matching networks provide some filtering action and therefore some isolation, it is not generally sufficient and additional transmission line filters may be required. An alternative method is to physically isolate the undesired mode(s) by careful selection of the loop mounting location.

The discussion that follows is simplified by assuming that the self-inductance of the loop is cancelled by the matching network. The matching network is represented by a single capacitor C_m chosen so that its reactance cancels the inductive reactance of the loop at frequencies close to resonance, i.e. the matching network and the coupling loop inductance are series resonant at the frequency of interest. Although this cannot occur simultaneously at both frequencies, it does not detract from the essence of the discussion.

Networks for Matching the Coupling Loops to Transmission Lines

In practice, a pi network, resonant line section, or transmission line stubs would be used to cancel the self-inductance of the coupling loop. The resonant line is used

in most successful cyclotrons [46], including the TRIUMF fundamental RF system. A pi network or "matched line feed" was originally chosen for TRIUMF, partly because of the long distance from the RF power source to the RF cavity and partly because it is the conventional system for transferring large amounts of RF power to complex loads where the probability of frequency shifts and discharges are small. The pi network must transform the complex impedance of the load into a resistance equal to the characteristic impedance of the transmission line. Such a network has a relatively small bandwidth, however, and would be difficult to keep tuned if there are shifts in the cavity's resonant frequency due to displacement of the dees or conditions leading to glow discharges or breakdown phenomena. The transmission line has no voltage nodes where insulators can be placed without subjecting them to high electric fields.

With a "resonant line section", a portion of the transmission line supports a standing wave. Supporting insulators are placed at voltage nodes and surge protectors are placed at the appropriate places to prevent flashover surges in the machine from travelling back to the power amplifiers. This matching structure is also not as sensitive to matching conditions or to impedance changes produced by glow discharges.

The test facility and cyclotron third harmonic RF systems operate with much less power than the fundamental does. The test facility fundamental matching

network is a conventional pi network. The test facility and cyclotron third harmonic matching networks are based on quarter-wave transmission line stubs. The two methods are similar; the choice is a practical matter:

a. at 23 MHz, quarter-wave stubs would be unwieldy; and,

b. at 69 MHz, lumped vacuum capacitors and air core inductors are very much less than ideal.

For similar reasons, coaxial cavities are used as anode tank circuits for VHF power amplifiers while lumped components are perfectly adequate at HF.

The primary advantages of matching schemes like a pi network, resonant line, or tuning stubs over a single capacitor are:

a. Cancellation of the loop self-inductance will have a wider bandwidth than a single capacitor could provide; and,

b. The coefficient of coupling can be adjusted over a limited range. This is required to compensate for changes in the cavity's quality factor, including changes due to heavy beam loading.

Isolation of Third Harmonic Mode from Fundamental Coupling Loop

By mounting the fundamental coupling loop at a location one-quarter of a third harmonic wavelength from the root, where the third harmonic mode's magnetic field strength goes through a minimum, coupling between the third harmonic mode

and the fundamental transmission line and power amplifier is minimized. The need for a transmission line filter to isolate the fundamental amplifier from the third harmonic mode is, therefore, largely eliminated. The loop must be slightly increased in area (by a factor of 1.15) compared to a critically-coupled loop mounted at the root of the cavity to compensate for the slightly smaller (0.87 H_{max}) magnetic field strength.

Given the size of loop needed to critically couple the loop to the fundamental mode, the coupling factor between that loop and the third harmonic mode can be estimated. As expected, it is much greater than unity. Note that the quality factor of the third harmonic mode is a factor root 3 larger than the fundamental quality factor. Given the same mutual inductance to both modes, a loop that is critically coupled to the fundamental mode would be overcoupled to the third harmonic mode, i.e. the input impedance to the loop is greater than 50 ohms.

Isolation of Fundamental Mode from the Third Harmonic Coupling Loop

Unfortunately, there is no location to mount the third harmonic coupling loop that will completely eliminate coupling between the fundamental mode and the third harmonic transmission line. A first choice for the loop would be the second magnetic field maximum located one-half of a third harmonic wavelength from the resonator root. Given the same mutual inductance to both modes, a loop that is critically

coupled to the third harmonic mode would be undercoupled to the fundamental mode, i.e. the input impedance to the loop is less than 50 ohms. At this point, the fundamental magnetic field strength is reduced to half of its maximum value. The mutual inductance between the loop and the fundamental mode is therefore half the mutual inductance between the loop and the third harmonic mode so the undercoupling is actually even weaker.

One might consider, on the basis of mutual inductance, whether it might be advantageous to locate the third harmonic coupling loop closer to the tip than the forward magnetic field maximum. In fact, there is a very slight advantage. As the loop is moved closer toward the tip, the ratio of third harmonic to fundamental mutual inductance, given a loop that is critically-coupled to the third harmonic mode, i.e. the ratio

$$\frac{\cos \phi}{\cos (\phi/3 + \pi/3)} \qquad 0 < \phi < \pi/2 \qquad (3.18)$$

increases from 2 at the maximum to 3 in the limit as ϕ approaches the tip. The loop area required to critically couple the loop to the third harmonic mode increases as secant of ϕ, however, and therefore approaches infinity in the limit as approaches the tip. It is difficult to justify the larger loop area in light of the slight increase in isolation. The forward magnetic field maximum is chosen as the optimum point at which to couple to the third harmonic mode.

In summary, the optimum locations and relative sizes of the coupling loops are presented in fig. 3.20.

Effect of Loop Location on the Accelerating Voltage Profile

The considerations just discussed were concerned with maximizing the isolation between the coupling loops by careful selection of the loops' location with respect to the root. An additional consideration is the effect of the loops' location along the accelerating gap on the accelerating voltage profile.

To support a uniform voltage profile, the cyclotron RF cavity must be longitudinally resonant everywhere, i.e. the direction of power flow from magnetic to electric energy in the RF cavity must always be strictly perpendicular to the accelerating gap. To an observer looking down the accelerating gap, the cyclotron RF cavity must appear "cut-off" just as a rectangular waveguide does when the wavelength of the guided wave is twice the long dimension of the waveguide cross-section, i.e. $\lambda_c = 2a$. If a longitudinal cross-section of the RF cavity is detuned, a transverse component to the power flow appears. This affects the voltage profile along the accelerating gap as shown in fig. B.8 of Appendix B.

In section three of this chapter, it was noted that the presence of a tuning stub can severely distort the accelerating voltage profile in its vicinity for similar

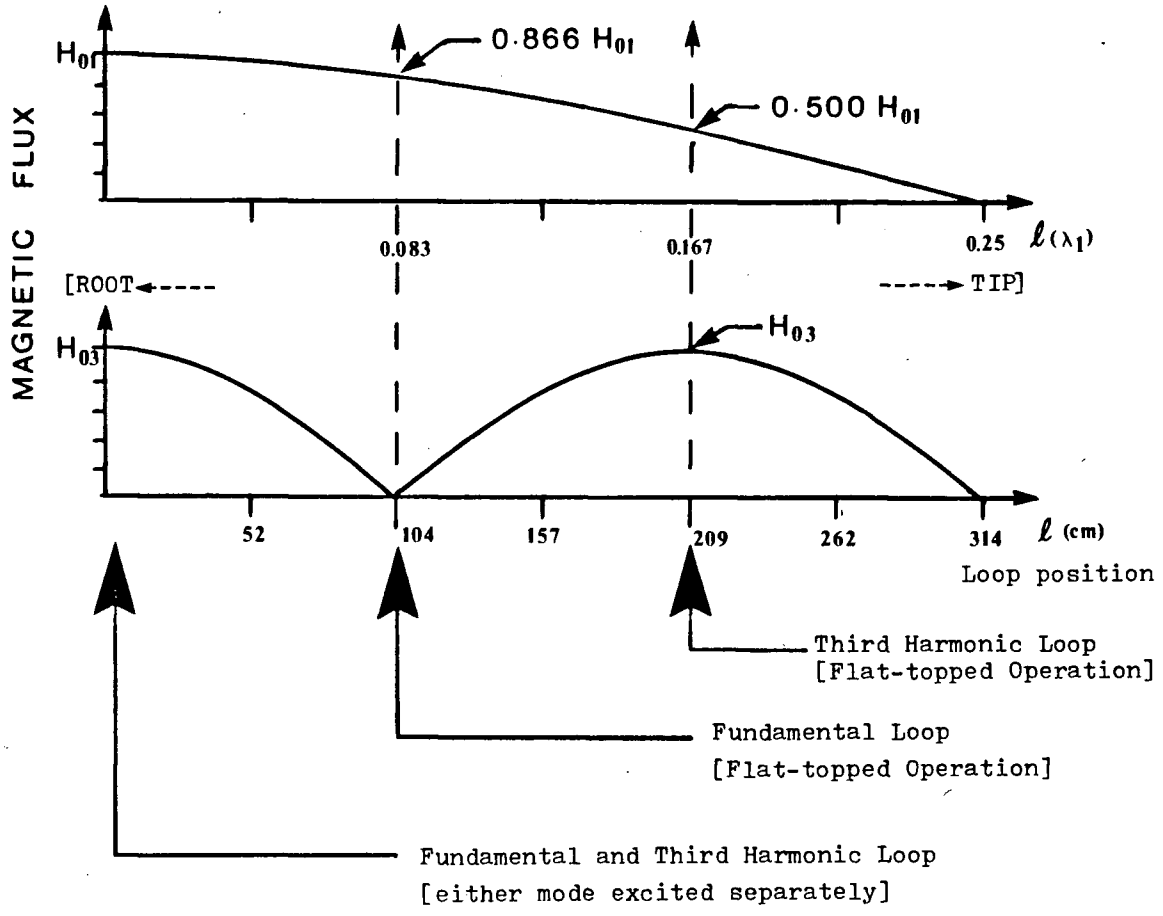

Fig. 3.20 Optimum Locations for Fundamental and Third Harmonic Coupling Loops

reasons. To the fundamental mode, unfortunately, the third harmonic loop and transmission line look like an inductively coupled tuning stub and vice versa. This raises the possibility of severe distortion in the accelerating voltage profile at both frequencies.

This possibility is difficult to evaluate analytically and cannot be checked experimentally using the RF systems test facility. It should be investigated using the 1:10 scale model of the RF cavity. It seems reasonable to mount the coupling loops directly behind the cyclotron centre post where minor disturbances to the voltage profile are more easily tolerated than elsewhere along the accelerating gap.

3.5 DEMONSTRATION OF A FLAT-TOPPED ACCELERATING VOLTAGE

A major objective of this study was the demonstration of a flat-topped accelerating voltage at operational power levels in the test facility cavity. This was accomplished in December 1984. It showed that:

a. swayback deflection could be used to make the radio frequency cavity harmonically resonant with a relatively small deflection giving a reasonably large tuning range; and,

b. the presence of the fundamental mode in the radio frequency cavity suppressed multipactoring when third harmonic power was applied, thus eliminating the need to pulse through multipactoring at third harmonic and greatly simplifying the third harmonic start-up and tuning procedure.

Tests of the system were conducted in a logical progression:

a. small signal in air;

b. intermediate power in air;

c. intermediate power in vacuum; and,

d. high power in vacuum.

The first two sets of tests were conducted in air so that the problems of multipactoring were avoided. They were intended to verify the tuning and coupling concepts in a forgiving environment. In the small signal tests, only a few watts of power were coupled into the test cavity - the large kilowatt transmitters were not used. Satisfactory completion of the small signal tests led to excitation of the RF cavity with a few thousand watts of power in air. It was not possible to excite the cavity with high power in air due to the relatively low breakdown strength of air at atmospheric pressure which, in practice, limits the maximum dee voltage to about 50 kilovolts or one-quarter power.

The last two sets of tests were conducted in vacuum ($< 10^{-6}$ Torr) to more closely approximate the normal operating environment of the TRIUMF RF cavity. Multipactoring prevents operation with a fundamental dee voltage of between twenty volts and about five kilovolts, and makes it difficult to excite the third harmonic mode by itself. Although the multipactoring threshold and the cavity quality factor increase with frequency, the resonator time constant decreases with frequency, increasing the rate

compared to the fundamental mode. When the fundamental mode was excited in the cavity, however, third harmonic multipactoring was suppressed, as noted above. All operations, including:

a. operation of power amplifiers;

b. control of RF drive frequency;

c. control of RF drive level;

d. control of cavity tuning; and,

e. monitoring of RF detectors;

were performed manually. A TRIMAC CAMAC-based microcomputer [39] (see section 4.2) was used to interface the tuning mechanism controller a to a standard video display terminal to permit convenient control. During the second phase of testing, the TRIMAC program was extended to permit use of a prototype version of the new radio frequency control system in place of the relatively crude set-up used initially.

3.5.1 Automatic Start-up and Cavity Tuning Procedure

An important objective of this work was the development of an automatic start-up and cavity tuning procedure that could be implemented in RF control system software (see section 4.2) to drive and tune the cavity at full power under vacuum.

The new procedure is based on the existing cyclotron start-up and tuning procedure that has evolved during the past decade. It is described below. More detailed descriptions of surface conditioning, multipactoring, and

sparking are presented in the last appendix.

1. During the first step, the cavity surfaces are "conditioned" by pulsing the radio frequency drive at high power with a low duty cycle, often for several hours. The system operator varies the frequency of the radio frequency drive while he observes the shape of the pulse taken off a dee voltage probe (see fig. 3.21). When the system operator sees that the dee voltage pulse has a clean shape, i.e. no ringing, and has reached a reasonable value, the driving frequency is close to the resonant frequency of the cavity and the surfaces are reasonably free from contamination. The RF drive is switched from pulsed to continuous drive.

2. As soon as the RF Logic Unit starts driving the cavity continuously, power dissipated in the cavity walls increases by as much as a factor of twenty-five. In response to the resulting rise in its temperature, the cavity structure changes its shape slightly and its resonant frequency relatively greatly, i.e. by several cavity bandwidths. In the existing system, the RF Logic Unit immediately reconfigures the RF system as a Barkhausen oscillator - the input to the power amplifiers is derived from a signal taken from the cavity that has been delayed by an appropriate phase shift. In the new system, the frequency of the master oscillator is adjusted to track the natural frequency of the cavity instead. While this complicates the system software slightly, it simplifies the system hardware considerably as will be explained in the next chapter.

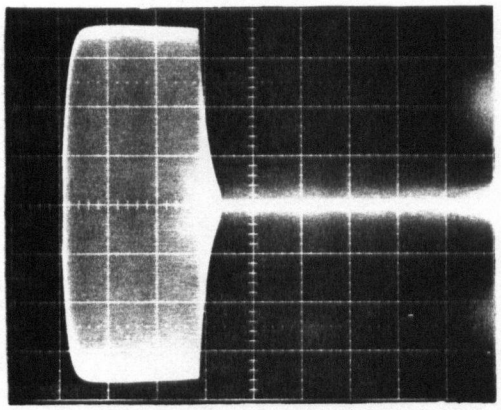

Vertical:
5 kV/division

Horizontal:
250 usec/division

(a)

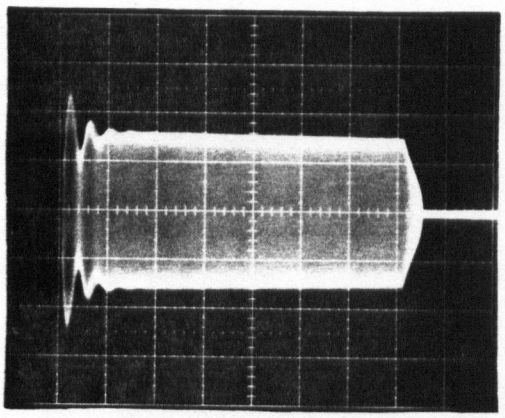

Vertical:
5 kV/division

Horizontal:
125 usec/division

(b)

Fig. 3.21 Cavity Dee Voltage During Pulsed Operation

(a) Negligible Tuning Error

(b) Some Tuning Error

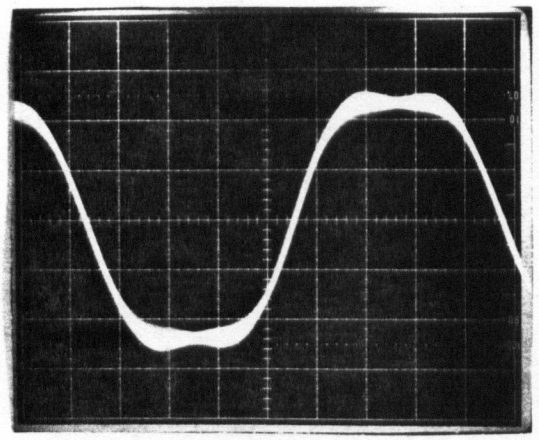

Vertical:
25 kV/division

Horizontal:
5 ns/division

(a)

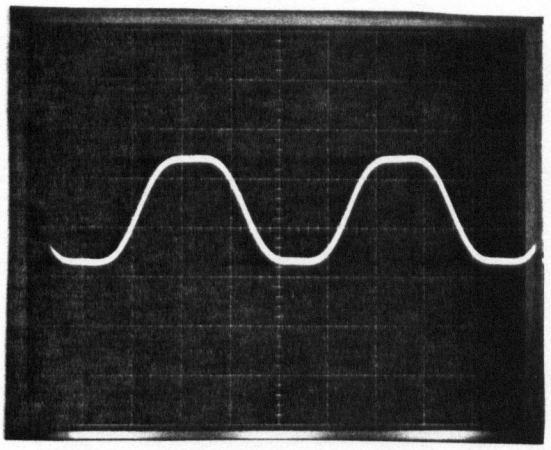

Vertical:
50 kV/division

Horizontal:
10 ns/division

(b)

Fig. 3.22 Demonstration of a Third Harmonic Flat-topped Accelerating Voltage in the RF Systems Test Facility

(a) Accelerating Voltage Unregulated

(b) Accelerating Voltage Regulated

3. The radio frequency drive signal is then ramped to full power. Sparking occurs sporadically as the dee voltage is increased - appropriate action is taken to prevent damage to the system. The system is kept in self-excited mode until the temperature of the cavity, hence its resonant frequency, has stabilized;

4. Once the cavity has stabilized, the resonant frequency of the cavity is adjusted (manually, in the case of the existing system, although it could be done automatically in the new system) until it coincides with the desired operating frequency. Appropriate action is also taken to minimize coupling of power to parasitic modes in the beam gap. At this point, the system is switched from self-excited mode to driven mode and the automatic tuning system begins adjusting the cavity tuning mechanism (the pressure of the resonator cooling water) in response to the tuning error signal (the relative phase between the coupling loop current and the cavity magnetic field). The radio frequency system is now fully operational and control is passed from the RF console to the cyclotron operators' console in the central control room and the process of injecting beam and tuning the cyclotron begins.

Normally, in the new system, the third harmonic mode would not be excited until the cyclotron is operating reliably with just the fundamental accelerating mode. The process of injecting the ion beam, tuning the various magnet

trim coils to bring the ion beam to extraction radius, and centering the ion beam orbits to prevent the excitation of betatron oscillations often takes several hours. Only after the ion beam has been successfully accelerated to maximum energy and extracted with the somewhat forgiving sinusoidal accelerating voltage would one normally attempt to alter the shape of the accelerating voltage for "high performance" operation.

At this point, the cavity surfaces have already been conditioned and, in the RF systems test facility at least, the presence of the fundamental mode seems to inhibit multipactoring when the third harmonic mode is excited. Therefore, it is expected that the start-up procedure for third harmonic will be far less difficult than it was for the fundamental mode. The system operator will enjoy the luxury of increasing the third harmonic dee voltage to any arbitrary level at an arbitrary rate, in stark contrast to the case at fundamental where the dee voltage must be stepped from almost zero to almost full voltage to prevent a multipactor discharge from loading down the cavity.

5. The first step in starting up the third harmonic radio frequency system is to determine the frequency of the cavity's third harmonic resonance. This could be accomplished in one of two ways:

The third harmonic mode could be driven at a low level (to minimize the reflected power) by an RF drive signal

whose frequency is exactly three times the fundamental. The RF system operator could then tune the cavity's third harmonic frequency downward from the highest possible frequency (i.e. push the dee-liner inwards) until a dramatic rise in the third harmonic dee voltage is observed, indicating that the cavity is very close to the desired resonance and the output from the tuning error detectors is now valid. Note, however, that the fundamental tuning loop would have to compensate for detuning of the fundamental resonant frequency if the dee-liner deflection scheme was used to tune the third harmonic. All the stepping motor movement associated with this slows the search process down considerably;

Alternatively, a variable frequency oscillator operating near the third harmonic of the fundamental could be temporarily used as the third harmonic RF system's master oscillator. Rather than tune the cavity until a dramatic rise in the third harmonic dee voltage is observed, one would sweep the oscillator frequency until a dramatic rise in the third harmonic dee voltage is observed. Knowing the present third harmonic mode resonant frequency, one could calculate the frequency shift required to make the cavity harmonically resonant. Once the cavity was correctly tuned, the VFO would be switched out and the output of the frequency tripler switched in.

In most respects, sweeping the cavity's third harmonic resonance across its range is the preferred method for

locating the third harmonic resonance. The end result of the procedure is a correctly tuned cavity and it doesn't require that a special variable frequency oscillator be included in the system. This would simplify both the system software and hardware.

The variable frequency oscillator technique does offer some advantages, however. The VFO can be swept faster than the cavity can be tuned and it permits the third harmonic resonance to be located without affecting the fundamental tuning loop.

Both methods have been successfully demonstrated on the RF systems test facility. The VFO technique will doubtless prove to be very useful during initial operation of the third harmonic RF system but sweeping the cavity resonant frequency instead will make the new radio frequency control system much simpler.

A third option exists, however. If, instead of being driven from a frequency tripler, the third harmonic system is driven from its own frequency synthesizer that has been phase locked to the fundamental frequency synthesizer, the VFO technique becomes far simpler to implement than it would be if the third harmonic system was driven by a fundamental frequency tripler. The prototype radio frequency control system described in the next chapter incorporates provision for evaluating both schemes.

6. Once the cavity is tuned to the desired frequencies, the cavity tuning system must keep the cavity harmonically resonant. Here the advantages of stub tuning of the third harmonic mode become most apparent - the fundamental and third harmonic tuning control loops would be virtually independent. The dee-liner deflection tuning scheme is a little more complicated. An expanded version of the cavity tuning diagram presented in fig. 3.17 is shown in fig. 3.23. The grid structure shows lines of constant wedge and tip displacements. The desired resonant frequencies have been chosen, in this example, to be 23.3 MHz and 69.9 MHz. The deadband regions, i.e. regions in which the reflected power is below acceptable limits, are indicated by the dotted lines. The function of the automatic tuning system is to place the resonant frequencies of the first and third harmonic in the central rectangular region using a bang-bang control algorithm.

The current tuning status is determined by measuring the root-loop phase of both modes. If the root-loop phase of either the fundamental or third harmonic mode has exceeded the bounds of the outer rectangle, then a tuning algorithm brings them both back to within the inner rectangle.

7. The tuning controller must be able to trap a number of potentially dangerous events:

The tuning loop must be disabled whenever the dee voltage is so low, i.e. when a spark occurs, that the output

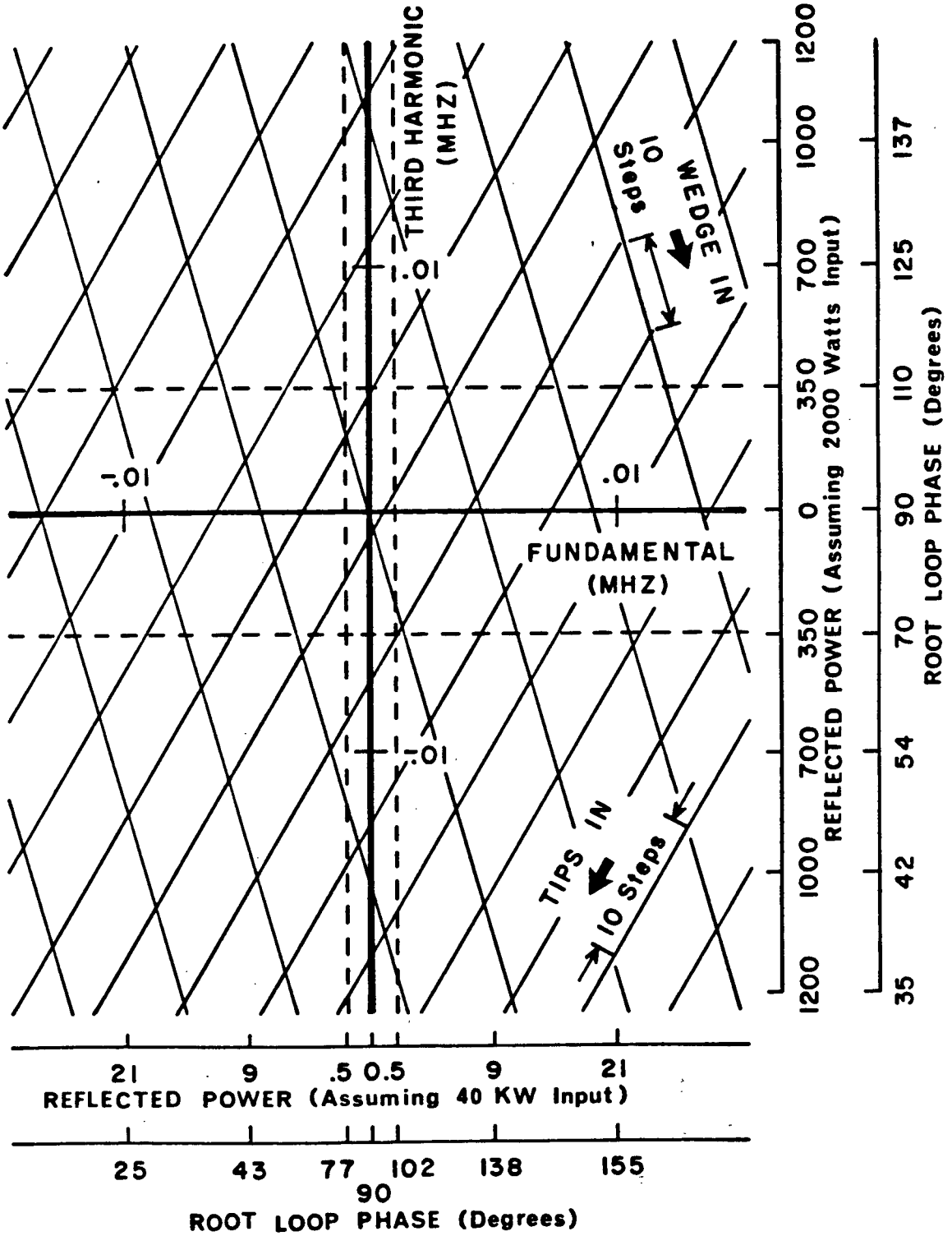

Fig. 3.23 Test Facility RF Cavity - Tuning Chart

of the tuning phase detectors is meaningless. One way of dealing with this problem is to use a comparator to generate a logic signal to indicate if the dee voltage is above the multipactoring threshold and if the tuning error detector output can be considered to be valid. The cavity tuning loop would be disabled when the signal was false. Usually, in such a case, the system controller would recycle the system through the start-up procedure; and,

Disturbances to the resonant frequency of the cavity arising from external disturbances to the temperature or pressure of the resonator cooling water may occur that the tuning controller cannot adequately suppress and may actually make worse.

In such a case, top priority would be directed to keeping the fundamental mode active in order to keep the cavity thermally stable. By keeping the structure of the cavity at standard operating temperature at all times, one minimizes the time required for the cavity to reach thermal equilibrium, a prerequisite for successful operation of the RF system in driven mode. In case of serious trouble, one would first stop beam injection and cut the third harmonic RF drive. With only fundamental mode to be concerned with, the tuning controller should be able to "ride" the disturbances out then bring the third harmonic mode back on as described above. If the disturbances make the cavity tuning loop very unstable, it may prove necessary to switch the system back to self excited mode.

The advantages of keeping the cavity near operating temperature are well known. At Fermilab, a "keep-alive" system ensures that the temperature of each Tevatron accelerating cavity is maintained at operating temperature (and therefore in tune) at all times, including when the high-level RF is momentarily turned off [47]. Unhappily, such a "keep-alive" system has not been implemented at TRIUMF. N. Carlson [48] has suggested a modification to the resonator cooling system that will keep the resonator from cooling down if the RF drive is removed. By automatically diverting the flow of cooling water from the heat exchangers and back into the cavity should the RF drive be momentarily lost, the cavity will not cool down nearly as fast as it does with the cooling system in its present form. This would reduce the time required to bring the RF system back to normal operating mode.

3.6 THE RF SYSTEM UPGRADE

Phase one of the resonator replacement program has been concerned with the design of a new cantilevered panel with greatly improved mechanical characteristics compared to the existing panel. Once studies of the dee voltage profile and parasitic modes on the cyclotron scale model are complete, the design of a new root and dee liner which incorporate mechanisms for tuning the fundamental and third harmonic modes and coupling loops to excite the modes, such as those described in this chapter, can begin. This will be part of phase two of the resonator replacement program which,

according to current plans, will include the manufacture and installation of eighty new resonator segments in 1986/87. The RF systems test facility will be used to demonstrate the reliability of the replacement segments, particularly the new tuning mechanisms, prior to their manufacture in quantity and installation in the cyclotron.

Design and development of a new radio frequency control system is proceeding in parallel with the design and development of the new radio frequency cavity. Operation of the system under manual control is possible, as was documented in this chapter, but successful cyclotron operation demands that the resonant frequency of the RF cavity and the amplitude and phase of the accelerating potential be closely and automatically regulated. The next chapter is concerned with the initial development of the new radio frequency control system. The prototype radio frequency control system will be thoroughly tested and debugged on the test facility before it is tested with the cyclotron radio frequency system.

References:

[1] K.L. Erdman, A. Prochazka, O.K. Fredriksson, R. Thomas, and W.A. Grundman. "A Square-Wave RF System Design for TRIUMF." *Proc 5th Int Cyclotron Conf,* pp 105-110 (1969).

[2] A. Prochazka, K.L. Erdman, M. Zach. "RF Square Wave." TRIUMF Design Note TRI-DN-70-33 (5 March 1970).

[3] M. Zach. "Error Signal for Resonator Fine Tuning." TRIUMF Design Note TRI-DN-70-43 (2 June 1970).

[4] A. Prochazka. "Tuning the Cavity for fo3/fo1 = 3.0000." TRIUMF Design Note TRI-DN-71-7 (8 March 1971).

[5] A. Prochazka, K. Erdman. "Rate of Rise of Resonator Voltage." TRIUMF Design Note TRI-DN-71-15 (27 April 1971).

[6] A. Prochazka. "Detuning of the Resonator." TRIUMF Design Note TR-DN-71-34 (September 1971).

[7] A. Prochazka, K.L. Erdman. "Estimate of Beam Loading." TRIUMF Design Note TRI-DN-71-39 (21 October 1971).

[8] A. Prochazka. "Some Considerations With Regard to RF Flat-top Operation I." TRIUMF Design Note TRI-DN-72-22 (18 October 1972).

[9] A. Prochazka. "Some Considerations with Regard to RF Flat-Top Operation II." TRIUMF Design Note TRI-DN-72-31 (30 November 1972).

[10] R. Poirier. "Determining the Resonator Frequency." TRIUMF Design Note TRI-DN-73-8 (21 February 1973).

[11] A. Prochazka. "The Design of the RF System for the TRIUMF Cyclotron." PhD Dissertation, University of British Columbia (1972).

[12] K.H. Brackhaus. "The Generation and Control of 1.5 Megawatts of RF Power for the TRIUMF Cyclotron." PhD Dissertation, University of British Columbia (1975).

[13] K.L. Erdman, R. Poirier, O.K. Fredriksson, J.F. Weldon, W.A. Grundman. "TRIUMF Amplifier and Resonator System." *Proc 6th Int Cyclotron Conf.* pp 451-458 (1972).

[14] K.L. Erdman, K.H. Brackhaus, R.H.M. Gummer. "Some Aspects of the Control and Stabilization of the RF Accelerating Voltage in the TRIUMF Cyclotron." *Proc 6th Int Cyclotron Conf.* pp 451-458 (1972).

[15] TRIUMF Facility Development Plan. "RF Resonator Replacement Program." (12 July 1984).

[16] TRIUMF Facility Development Plan. "RF Third Harmonic Flattopping." (12 July 1984).

[17] M.K. Craddock, E.W. Blackmore, G. Dutto, C.J. Kost, G.H. Mackenzie, and P. Schmor. "Improvements to the Beam Properties of the TRIUMF Cyclotron." *IEEE Trans* NS-24(3)1615-1617 (June 1977).

[18] R. Baartman, J. Beveridge, E.W. Blackmore, M.K. Craddock, D. Dohan, J. Doornbos, G. Dutto, K.L. Erdman, C.J. Kost, R. Laxdal, J.A. MacDonald, G.H. Mackenzie, P.W. Schmor, J.S. Vincent. "Beam Developments at TRIUMF." *IEEE Trans* NS-28(4):2879-2881 (August 1981).

[19] E.W. Blackmore, P. Bosman, R. Burge, G. Dutto, D. Gill, G.H. Mackenzie, and P.W. Schmor. "Achievement and Control of the 100uA Beam at TRIUMF." *IEEE Trans* NS-26(2):2320-2323 (April 1979).

[20] T. Enegren, L. Durieu, G. Dutto, D. Michelson, R. Poirier, and R.E. Worsham. "Recent Prototype Studies and Measurements Toward Third Harmonic Flat-topping at TRIUMF." 1984 European Conference on Progress in Cyclotrons: Aachen, West Germany. (November 1984).

[21] T. Enegren, L. Durieu, D. Michelson, and R.E. Worsham. "Development of Flat-topped RF Voltage for TRIUMF." *IEEE Trans* NS-32(5):2936-2938 (October 1985).

[22] G. Stanford, R. Worsham, K. Fong, and S. Hutton. "A New and Improved RF Resonator Segment for the TRIUMF Cyclotron." *IEEE Trans* 32(5):2942-2944 (October 1985).

[23] J.C. Slater. "Microwave Electronics." Princeton:D. Van Nostrand, p 81 (1950).

[24] S. Ramo, J.R. Whinnery, T. Van Duzer. "Fields and Waves in Communication Electronics." New York:John Wiley, pp 558-561 (1967).

[25] S.Y. Liao. "Microwave Devices and Circuits." Englewood Cliffs:Prentice-Hall, Inc. pp 137-139 (1980).

[26] G. Mavrogenes and W.J. Gallagher. "Coaxial Cavities with Beam Interaction." *IEEE Trans* NS-32(5):2778-2780 262-265 (October 1985).

[27] E.L. Ginzton. "Microwave Measurements." New York: McGraw-Hill Book Co. Inc., pp 391-461 (1957).

[28] D. Kajfez and E.J. Hwan. "Q-Factor Measurement with Network Analyzer." *IEEE Trans* MTT-32:666-670 (July 1984).

[29] D.R. Vaughan, G.E. Mols, D.W. Reid, J.M. Potter. "A High-Power, Solid-State RF Source for Accelerator Cavities." *IEEE Trans* 32(5):2857-2859 (October 1985).

[30] R.B. McKenzie-Wilson. "Tuning System for Capacitively Loaded Quarter-Wavelength Accelerating Cavity." *IEEE Trans* NS-32(5):2786-2787 (October 1985).

[31] W.A. Grundman, L.J.P. Tillson, W.J.F. Bradley, O.K. Fredriksson, R.E. Thomas. "Conceptual Design Study of RF Resonators for a 500 MeV H- Cyclotron." TRIUMF Report TRI-70-2 (May 1970).

[32] A. Susini, CERN. Private communication (1983).

[33] P. Lanz, SIN. Private communication (1983).

[34] R.E. Worsham., TRIUMF. Private communication (1983).

[35] D.A. Dohan, TRIUMF. Private communication (1984).

[36] J.V. Pacak, TRIUMF. Private communication (1985).

[37] R.F. Harrington. "Time-Harmonic Electromagnetic Fields." New York: McGraw-Hill Book Co., pp 317-446 (1961).

[38] R. Poirier. "RF Impedance of the Accelerator Beam Gap and Its Significance to the TRIUMF RF System." *IEEE Trans* NS-26(3):3947-3950 (1979).

[39] D.P. Gurd, D.R. Heywood, J.V. Cresswell. "Developments in the TRIUMF Control System." *Proc 9th Int Conf on Cyclotrons and their Applications*, pp 565-569 (1981).

[40] J. Riedel. "R.F. Systems." *IEEE Trans* NS-26(2):2133-2136 (April 1979).

[41] R. Beringer. "Resonant Cavities as Microwave Circuit Elements," in Principles of Microwave Circuits, C.G. Montgomery, R.H. Dicke, and E.M. Purcell, ed. New York: McGraw-Hill Book Co. pp 207-239 (1948).

[42] A.H. Botha and F.S. Van der Merwe. "Design of Circuits for Coupling Power Amplifiers to Resonators." *IEEE Trans* NS-26(3):3962-3964 (1979).

[43] E.W. Pogue and F.R. Buskirk. "Cavity-Coupling Investigation for the Phermex 50 MHz RF Accelerator." *IEEE Trans* NS-32(5):2852-2853 (October 1985).

[44] A. Susini, CERN. Private communication (1983).

[45] B. Bischof. "The RF System of the Flattop Acceleration Structure in the SIN 590 MeV Ring Cyclotron." *IEEE Trans* NS-32(2):2186-2189 (April 1979).

[46] E.W. Vogt and J.J. Burgerjon, ed. "TRIUMF Proposal and Cost Estimate." University of British Columbia, p 63 (1966).

[47] Q. Kerns, C. Kerns, H. Miller, S. Tawzer, J. Reid, R. Webber, D. Wildman. "Fermilab Tevatron High Level RF Accelerator Systems." *IEEE Trans* NS-32(5):2809-2811 (October 1985).

[48] N.L. Carlson, TRIUMF. Private communication (1985).

CHAPTER 4

CONCEPTUAL DESIGN AND INITIAL DEVELOPMENT OF THE NEW RADIO FREQUENCY CONTROL SYSTEM

4.1 INTRODUCTION

The primary function of TRIUMF's radio frequency control system is to ensure that the cyclotron's accelerating voltage is sufficiently stable in amplitude, phase, and frequency to meet operational requirements. The problems of:

a. disturbances to the amplitude and phase of the accelerating voltage;

b. sparking and multipactoring; and,

c. drifts in the resonant frequency of the accelerator RF cavity;

are dealt with, by the use of a sequential controller and several feedback control loops, to permit both safe and reliable operation of the cyclotron radio frequency system and production of an external ion beam meeting operational requirements.

An extensive system of safety interlocks are required to prevent damage to the RF system in case of failures within the RF power amplifiers or various support services.

Such failures might include loss of vacuum in the cyclotron tank or a failure in one of the cyclotron's water cooling systems. Many of the RF system interlocks are implemented in software by the cyclotron's CAMAC-based central control system rather than through the RF control system. This simplifies the design of the RF control system considerably. The software safety system, which also supports an extensive error-logging facility, is backed up by a comprehensive set of hard-wired interlocks.

The radio frequency system is supervised from an operator's console in the RF power source room (located in the service annex directly under the central control room and immediately next to the cyclotron vault) during system start-up. The radio frequency system can begin normal operation a few hours after successful start-up, i.e. when the system is operating with a continuous RF drive signal at operational accelerating voltage levels and the resonant frequency of the RF cavity has stabilized. Control of certain functions, including RF drive frequency, cavity tuning mode (driven or self-excited), and the relative amplitude and phase of the third harmonic accelerating voltage but notably **not** the fundamental accelerating voltage amplitude, can then be transferred from the RF console to the operators' console in the central control room. During normal operation, accelerating voltage regulation, cavity tuning, and spark detection and recovery are performed automatically with little need for operator intervention.

The existing cyclotron RF control system was constructed in the early 1970's based on experience with an earlier control system built for the TRIUMF Central Region Model (CRM) [1]. The existing system was described in conference publications by Erdman et al [2] and Gummer [3], and in Brackhaus's thesis [4]. A simplified block diagram of the existing RF control system is shown in fig. 4.1.

Compared to the cyclotron's radio frequency cavity, the radio frequency control system at TRIUMF has seen relatively little attention since it was commissioned. This is mainly due to its reliable performance record, the relatively modest accelerating voltage amplitude and phase stability required by the cyclotron in its present modes of operation (see Table IV), and urgent priorities elsewhere in the RF system, as noted in Appendix B.

The existing 23 MHz (fundamental) RF control system is almost fifteen years old and, technologically, it is beginning to show its age. Although it has performed reliably during the past decade, operational experience has suggested that improvements to many aspects of its design could significantly improve its performance. Of particular interest is the replacement of the hard-wired finite state machine with a control program running on a dedicated control processor and the development of a better feedback compensation network and better RF detection circuitry.

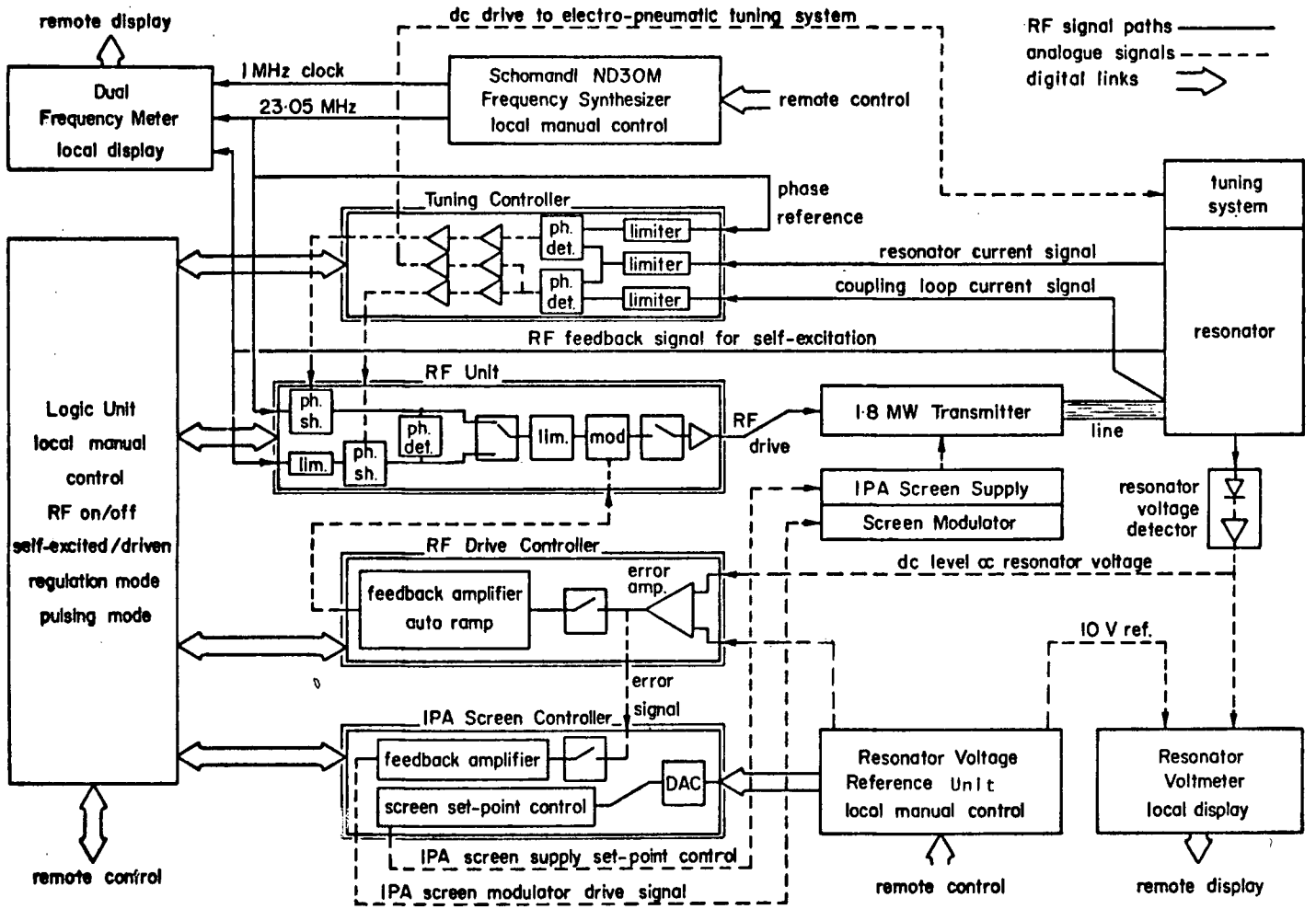

Fig. 4.1 TRIUMF RF System - RF System Controller (1973 to present)

A second set of RF control circuits, operating in parallel to the first, will be required to support the 69 MHz (third harmonic) RF system that will probably become operational in late 1987 following completion of modifications to the cyclotron RF cavity that are planned for 1986/87. For ease of installation and maintenance, it will be identical to the new (23 MHz) fundamental RF control system currently being designed, except for some frequency dependent elements such as RF filters and phase shifters.

It was decided (1983) to replace rather than modify the existing 23 MHz control system because it was believed that the problems associated with attempting to modify the existing RF control system outweighed any potential advantages associated with retaining it. For example, Durieu's [5] attempts to increase the gain and extend the bandwidth of the existing feedback compensation amplifiers were partially successful but caused **"unexpected and undesirable effects on other aspects of RF control system operation,"** particularly system start-up, and it was necessary to return the system to its original configuration. In addition, there have been significant advances in analog and digital electronics since the existing RF control system was designed (about 1970) of which microprocessor technology and high quality monolithic operational amplifiers are obvious examples. A system incorporating improved components and packaging would be **"easier and faster to service, maintain, and improve"** [6].

The current re-design effort began in mid-1983 with initial studies by Durieu [7] during a sixteen-month stay at TRIUMF. His interest was "**mainly to assess the possibility of achieving (an accelerating voltage that is sufficiently stable to permit single turn extraction) and how.**" He designed a compensation network for the accelerating voltage amplitude and phase control loops and supervised the design and development of the prototype version of the new control system that is described in section 4.3 of this chapter.

Sigg [6], during a short visit to TRIUMF in August 1983, made a number of suggestions concerning the design of the new radio frequency control system based on his experience with the SIN cyclotron's RF control system. His comments were particularly concerned with selection and evaluation of electronic components and cables for the system.

The clear division between RF control functions and RF safety functions has simplified the control system upgrade. The existing facility for automatic fault protection and equipment monitoring that is provided by hard-wired safety interlocks, the cyclotron central safety system, and the cyclotron central control system's CAMAC and analog multiplexer (MUX) systems should not be substantially affected by the installation of a new RF control system. However, two safety-related functions are built into both the existing and new RF control systems to improve the

reliability of the cyclotron:

1. Detection and recovery from sparking and multipactoring are performed automatically. By eliminating the need for operator intervention each time a spark or other discharge occurs, normal operation can be restored in a few seconds rather than several minutes; and,

2. Under certain conditions, the RF cavity tuning controller can become ineffective, either because the cavity tuning mechanisms are forced to an upper or lower tuning limit, or because the cavity's resonant frequency may (under certain conditions) drift faster than the controller can respond. If the cavity tuning error signal exceeds a certain threshold for a specified time interval, the cavity tuning mode is switched from driven to self-excited mode and must be manually reset by an operator. By keeping the RF cavity at operating temperature, the time required to restore normal operation is reduced.

Chapter Outline

The new RF control system will be described in four parts:

1. In the first section (4.1), the basic organization of the new RF control system is described. The objectives for, and the constraints on, the design of the new system are outlined. They were suggested by experience with the existing TRIUMF cyclotron RF control system, the RF systems test facility, and the SIN ring cyclotron RF control system;

2. The second section (4.2) describes the four modes of RF

system operation: pulsed mode, self-excited mode, driven mode (fundamental only), and driven mode (flat-topped), and the organization of the control program that will supervise the system. Criteria for selecting the new local control processor which will run the control program are discussed;

3. The third section (4.3) describes the prototype version of the new RF control system that was used to control the RF systems test facility during the RF flat-topping tests described in chapter three and modifications and enhancements to the design of the prototype that were suggested during those tests; and,

4. The fourth section (4.4) describes some of the problems associated with the design of a radio frequency detection system for the new control system and the current state of its development.

4.1.1 Organization of the New Control System

A typical accelerator RF system consists of an RF source/master oscillator which drives an RF power amplifier which in turn excites the RF cavity in which the accelerating voltage is developed. The accelerating voltage (usually a few hundred kilovolts) is often developed across the short gap of a foreshortened coaxial cavity. By modulating the amplitude and phase of the RF drive signal, the amplitude and phase of the accelerating voltage can be controlled, as suggested by fig. 4.2.

RF Detection

In order to accurately control or regulate the

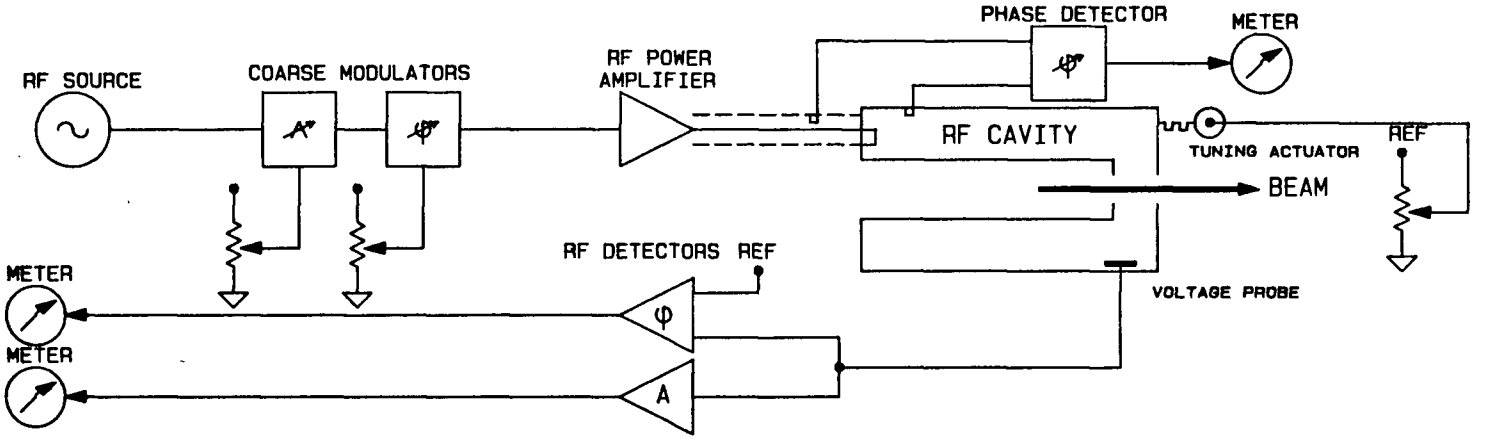

Fig. 4.2 A Simple Radio Frequency Control System

accelerating voltage, it is necessary to have accurate measures of its amplitude and phase. It is surprisingly difficult to measure the accelerating voltage accurately, however. An approximate measurement of the voltage (to within a few percent) can be made with a capacitive probe installed near the accelerating gap. The resulting capacitive divider steps the voltage down from several hundred thousand volts to the order of several volts. It is passed over low-loss/phase-stabilized coaxial cable to RF amplitude and phase detectors. Problems with mechanical vibration of the dee and temperature fluctuations in the probe, cable, and within the amplitude and phase detector circuits introduce perturbations in the output and, in the case of TRIUMF, will make it difficult to measure the accelerating voltage to the desired accuracy, as will be discussed in section 4.4. An oscilloscope is perhaps the most useful form of amplitude and phase detector during RF system development.

As noted in chapter three, the resonant frequency of the RF cavity varies with changes in its temperature and other effects which may subtly alter its geometry. Some mechanism for tuning the cavity is required. Smaller RF cavities, such as those used for chopping and bunching the ion beam in TRIUMF's injection line or even the RF separator cavity installed in TRIUMF's beam line M9, are normally tuned once (to achieve the highest accelerating voltage for a given RF power input) and can then left for days or even

weeks until minor retuning is again required. Large and mechanically complex accelerator RF cavities, particularly those with high quality factors, must be retuned more often, perhaps every few minutes. This requires a better measure of the cavity tuning error (the difference between the RF drive frequency and the resonant frequency of the cavity) than the relative amplitude of the accelerating voltage since it is desirable to also have some indication of whether the cavity is tuned above or below the driving frequency. For small tuning errors, the difference in phase between the current in the coupling loop (and the transmission line feeding it) and the RF magnetic field in the cavity (and the surface currents they induce in the cavity walls) is approximately proportional to the signed (rather than absolute) difference between the driving and resonant frequencies, as was described in chapter three.

The Need for an Automatic RF Control System

The manually controlled (open-loop) system shown in fig. 4.2 is adequate during testing and development of system components but during normal operation it is desirable to automate the more repetitive control functions and provide mechanisms for protecting the system (and personnel) from damage in the case of equipment failure or other problems.

Cyclotron radio frequency control systems are generally much simpler than other accelerator RF control systems.

Unlike synchronous accelerators, they operate at a fixed frequency and unlike most linear accelerators, they operate at relatively low frequencies, i.e. tens of megahertz rather than hundreds or thousands of megahertz. In the case of TRIUMF, however, these advantages are slightly offset by the size of the RF cavity (and its consequent mechanical complexity and large power requirements) and the extremely tight specifications on amplitude and phase regulation that must be met if the major design objective of the control system upgrade, acceleration of the ion beam in separated turns, is to be achieved.

Functions of the RF Control System

The new TRIUMF RF control system will perform two major functions:

First, it will control the sequence of events required to bring the accelerating voltage up to full value and it will keep the cavity tuned to the driving frequency as required for safe and reliable operation with either a fundamental or flat-topped accelerating voltage. This is a **sequential or programmed control** task [9] because strictly "on/off" functions are performed in response to strictly "true/false" inputs and the current "state" of the process. Note that this definition of sequential control can include so-called "bang-bang" process regulators [9]. The sequential control algorithm is implemented in software running on a dedicated "local control processor". The sequential control algorithm requires only modest bandwidth

compared to accelerating voltage regulation; and,

Second, it will closely regulate the amplitude and phase of the accelerating voltage as required to accelerate the ion beam with turn separation and energy resolution that meet operational requirements. The regulation of the amplitude and phase of the cyclotron accelerating voltage requires a feedback control loop with relatively high bandwidth (several tens of kilohertz) and very high precision (equivalent to greater than 16 bits) and cannot be efficiently implemented using digital techniques. The four accelerating voltage controllers are based on digitally supervised discrete analog controllers [10], as suggested by fig 4.3. Inspection of the accelerating voltage stability tolerances listed in Table IV of chapter two suggests that fundamental RF voltage stability and relative phase stability between fundamental and third harmonic will be the most difficult specifications for the drive controller to satisfy.

In most cyclotrons, disturbances to the accelerating voltage are generally thermal or mechanical in origin and consequently require a controller with only a moderate bandwidth. The major problem that limits the effectiveness of accelerating voltage regulation in such cases arises from the limited resolution of the RF voltage detectors. Unfortunately, an additional high frequency perturbation introduced by pulsing the ion beam complicates the design of the accelerating voltage controller for TRIUMF.

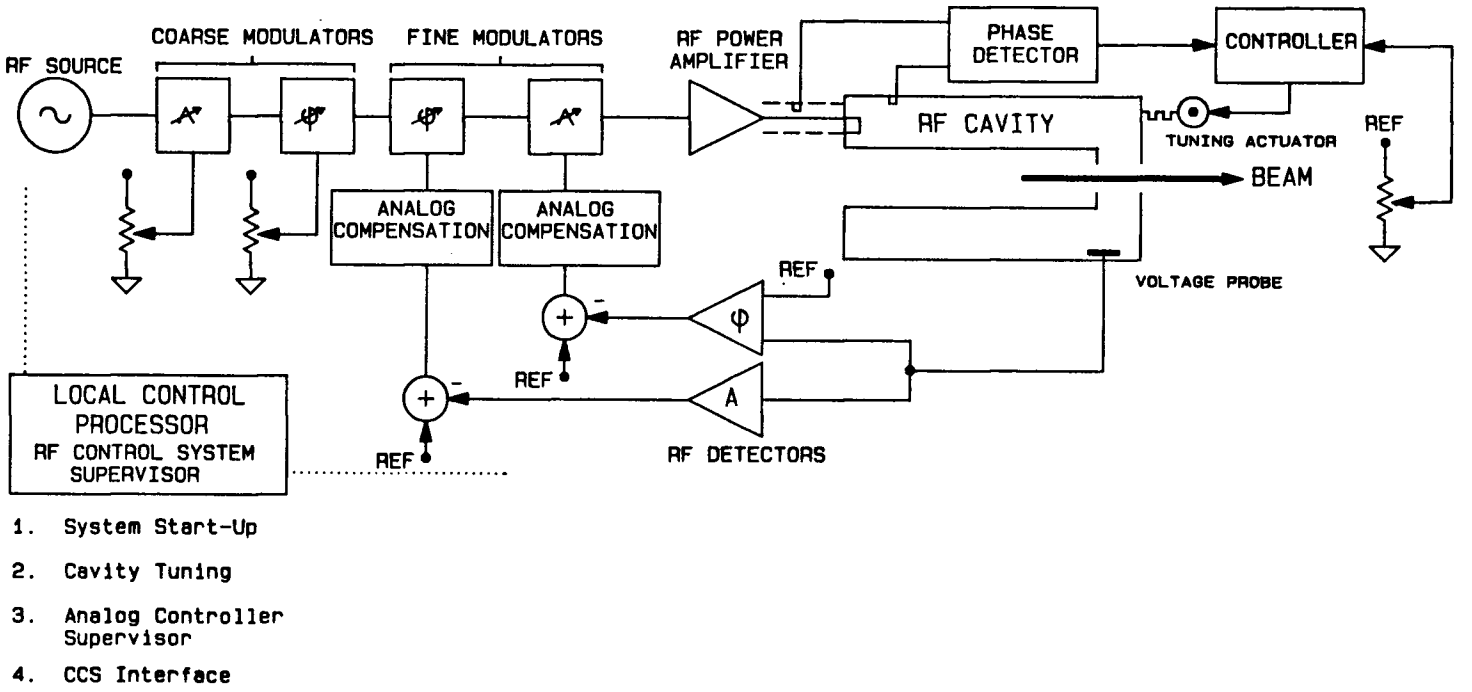

1. System Start-Up
2. Cavity Tuning
3. Analog Controller Supervisor
4. CCS Interface

Fig. 4.3 Incorporation of Feedback Control Loops into a Simple Radio Frequency Control System

The Accelerating Voltage Control Loop

In TRIUMF, the ion beam injected into the cyclotron is pulsed at 1 kilohertz with a variable duty cycle to simplify the design of certain diagnostic probes. Unfortunately, this periodic (and relatively severe) variation in the loading on the RF cavity greatly perturbs the accelerating voltage. At maximum beam current (200 uA) and constant RF power input (1.2 megawatts), beam loading (100 kilowatts) accounts for an almost 4 percent reduction in the accelerating voltage compared to the unloaded case. The relatively high frequency (compared to the thermal and mechanical problems that otherwise perturb the beam) of the perturbation introduced by beam pulsing makes regulation of the accelerating voltage very difficult but, unfortunately, beam pulsing must be retained until these essential beam diagnostic devices can be replaced.

There are three methods which could be used to reduce the effect of the perturbation. First, as noted in section 2.3, perturbations with frequency components that are exact multiples of the reciprocal of the time-of-flight have a minimal effect on the final beam energy. The pulser frequency could be increased from 1 kHz to between 3 and 4 kilohertz, depending on the accelerating voltage and the number of turns required to reach extraction. Second, since the disturbance is both periodic and predictable, some sort of feed-forward compensation could be introduced into the control loop. The compensation signal could be introduced

from a manually set pulse generator, a signal derived from the pulser itself, or using a "ripple memory" of the type described by Vader and Schreuder [11]. Third, the gain and bandwidth of the control loop compensation network could be made sufficiently large but the limitations imposed by the stability criterion are quite severe.

Durieu's [4] proposed compensation scheme for both the amplitude and phase regulation feedback control loops is shown in fig. 4.4. It is based on a proportional double integral controller which he predicts will stabilize the accelerating voltage sufficiently to meet the specifications for separated turn acceleration, assuming the RF detectors meet similar tolerances. The compensation amplifiers introduce two zeros into the loop. The first zero, located at $-1/t_1$ on the real axis, is designed to cancel the pole at $-1/t_r$ which accounts for energy storage in the cavity. The second zero, at $-1/t_2$, is a stabilizing zero which is required in a type two control system. The term e^{-st_3} accounts for higher order poles and the finite transport delay in the control loop. Although Durieu considered implementing the compensation network using direct digital control, he decided to use digitally supervised discrete analog controllers for reasons of economy.

Controller Tuning

To meet the stability specifications that have been imposed on the accelerating potential by separated turn

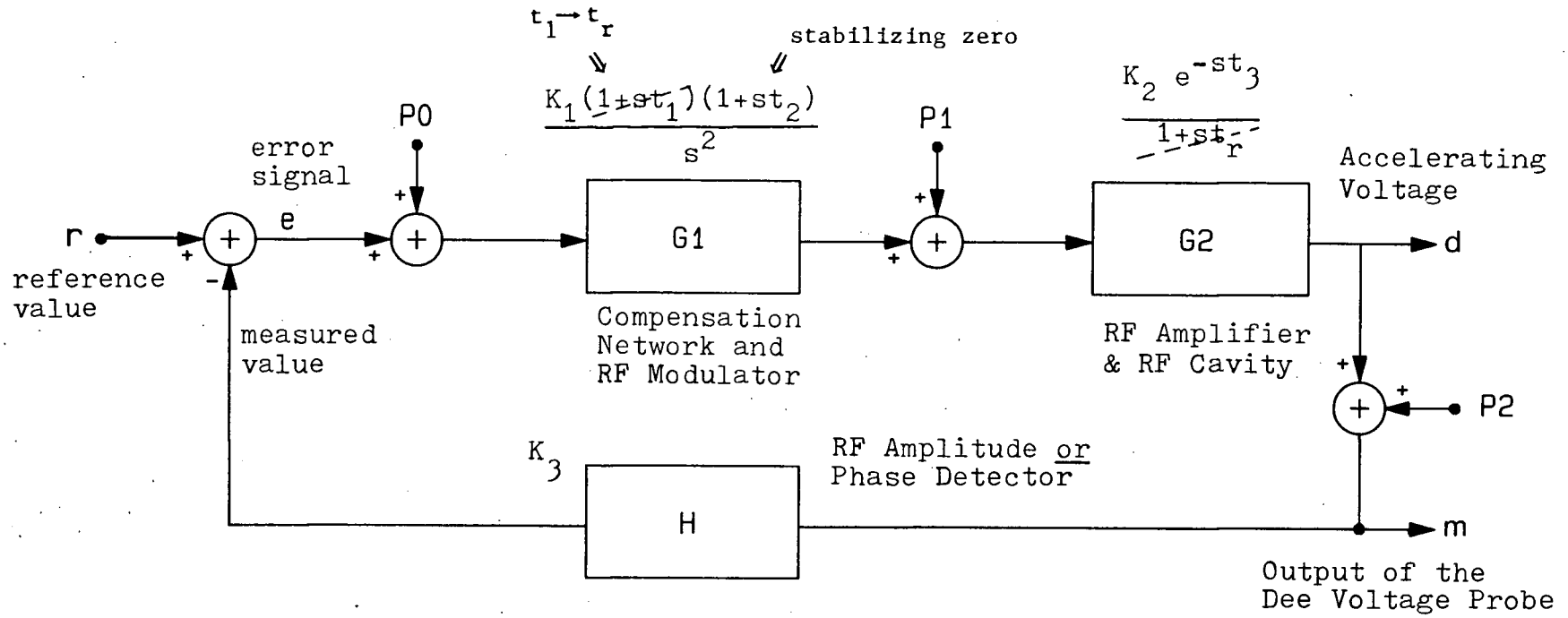

Fig. 4.4 Simplified Model of the New RF Control Loop

e^{-st_3} accounts for higher order poles and finite transport delay in the loop

the pole at $-1/t_r$ accounts for energy storage in the RF cavity

The RF control loop is designed to suppress P1-type perturbations in the amplitude and phase of the accelerating voltage. Such disturbances are caused by changes in the beam loading, small drifts in the resonant frequency of the cavity, or small variations in the gain of the RF power amplifiers.

Errors (P2) introduced into the measurement chain cannot be compensated for by the control loop and, in fact, cause the control loop to introduce perturbations into the amplitude and phase of the accelerating voltage.

The error signal (e) may be artificially perturbed (P0) at various stages in the compensation network in order to provide feed-forward compensation of certain known or predictable P1 or P2 type disturbances.

acceleration despite the disturbance introduced by the 1 kilohertz beam pulser, the analog control loops require the highest possible loop gain and bandwidth that are consistent with stable operation. If the poles, zeros, gain, and transport delay in the process (i.e. the power amplifiers and the radio frequency cavity) are known exactly, then the poles, zeros, and gain of the compensation network that would result in the best stability and steady state error could be determined analytically.

The effort required to obtain the exact frequency response of the process is seldom justified [10]. Instead, the control-loop dynamics are usually determined by analyzing the response of the system to a disturbance such as a step change in the reference setting (set point) or the process load. The step change introduced by beam pulsing in TRIUMF is suitable for this purpose. The gain and location of the dominant pole or zero for optimum response can be calculated for tuning proportional (P), proportional-integral (PI), and proportional-integral derivative (PID) controllers. Techniques such as the closed-loop Ziegler-Nichols procedure [12] are commonly used for this purpose. Other methods include the Cohen-Coon procedure and the 3C tuning method [13]. Unfortunately, a literature search failed to locate a technique for tuning proportional-double integral controllers. Although the controller could be tuned by trial and error, development of a tuning procedure would be useful and raises the possibility of making the new

control system automatically adaptive to changes in beam loading.

Alternative Modulation and Detection Schemes

It is possible that other problems, particularly those associated with measurement of the accelerating voltage, may limit the achievable amplitude stability. If this is the case, alternative modulation and detection schemes could be used:

The 23 MHz preamplifiers could be driven into saturation and the amplitude controlled by screen modulating the Intermediate Power Amplifier (IPA) instead of amplitude modulating the RF signal that drives the fundamental amplifier chain. This was originally proposed for TRIUMF by Erdman et al [2]. Provision for its implementation in the original control system is illustrated in fig. 4.1;

A differential analyzing slit, as described by von Rossen, Euler, and Hinterberger [15], could be used to measure fluctuations in the energy gained per turn and therefore to generate an error signal for fine control of the amplitude of the accelerating voltage. This possibility is briefly described in section 4.4.

Regulating the Operating Point of the Fine Modulators

Of particular interest is the use of two amplitude modulators and two phase modulators in cascade for RF drive signal control as shown in fig. 4.3. The first two "coarse" modulators are controlled by the sequence controller or local control processor. The last two "fine" modulators are

driven by the output of the analog compensation amplifiers to which a fixed bias has been added to set the modulator's operating point. This arrangement is used in the prototype control system for two reasons:

1. The transfer characteristic of a typical amplitude or phase modulator is highly non-linear so the differential gain of the modulator varies with the operating point. One can adjust the coarse modulator so that the average value of the controller compensation signal driving the fine modulator remains constant. For example, if the average value of the compensated error signal driving the fine modulator increases, then the local control processor should increase the signal driving the corresponding coarse modulator until the average value of the compensated error signal drops back to near zero. This allows the system to maintain:

   a. a reasonably fixed operating point for the fine modulator;

   b. a reasonably constant differential gain for the fine modulator; and,

   c. predictable control loop behaviour over a wide operating range;

2. During system start-up, it is desirable to operate without accelerating voltage regulation. The dual modulator arrangement presented here permits the local control processor to disable the analog controllers, either by driving them into saturation or physically replacing their

control signal with a fixed bias, and controlling the amplitude and phase of the RF drive signal strictly from the coarse modulators. As will be described in section 4.2, this greatly simplifies the procedure for closing the control loops once normal operation has been established. Burge [16] has suggested that it is preferable to design the modulator driver so that the combined driver-modulator transfer function is linear; he is currently attempting to design a suitable modulator driver.

The Local Control Processor

The heart of the new system is the local control processor which runs the sequential control program that supervises the RF system. It performs four basic functions:

1. It cycles the RF system through the sequence of events required to drive the accelerating voltage from zero to full value;
2. It keeps the accelerator RF cavity tuned to the RF drive frequency, or, more precisely, prevents the cavity tuning error from exceeding certain bounds (i.e. it implements a bang-bang [9] cavity tuning control algorithm);
3. It supervises the analog controllers. At the simplest level, it merely sets the reference inputs and recycles the RF system through a "warm" start-up routine if a spark is detected but more sophisticated functions can be added as additional performance is required. The coarse modulators can be used to stabilize the operating point of the fine modulators, as discussed above, or the local control

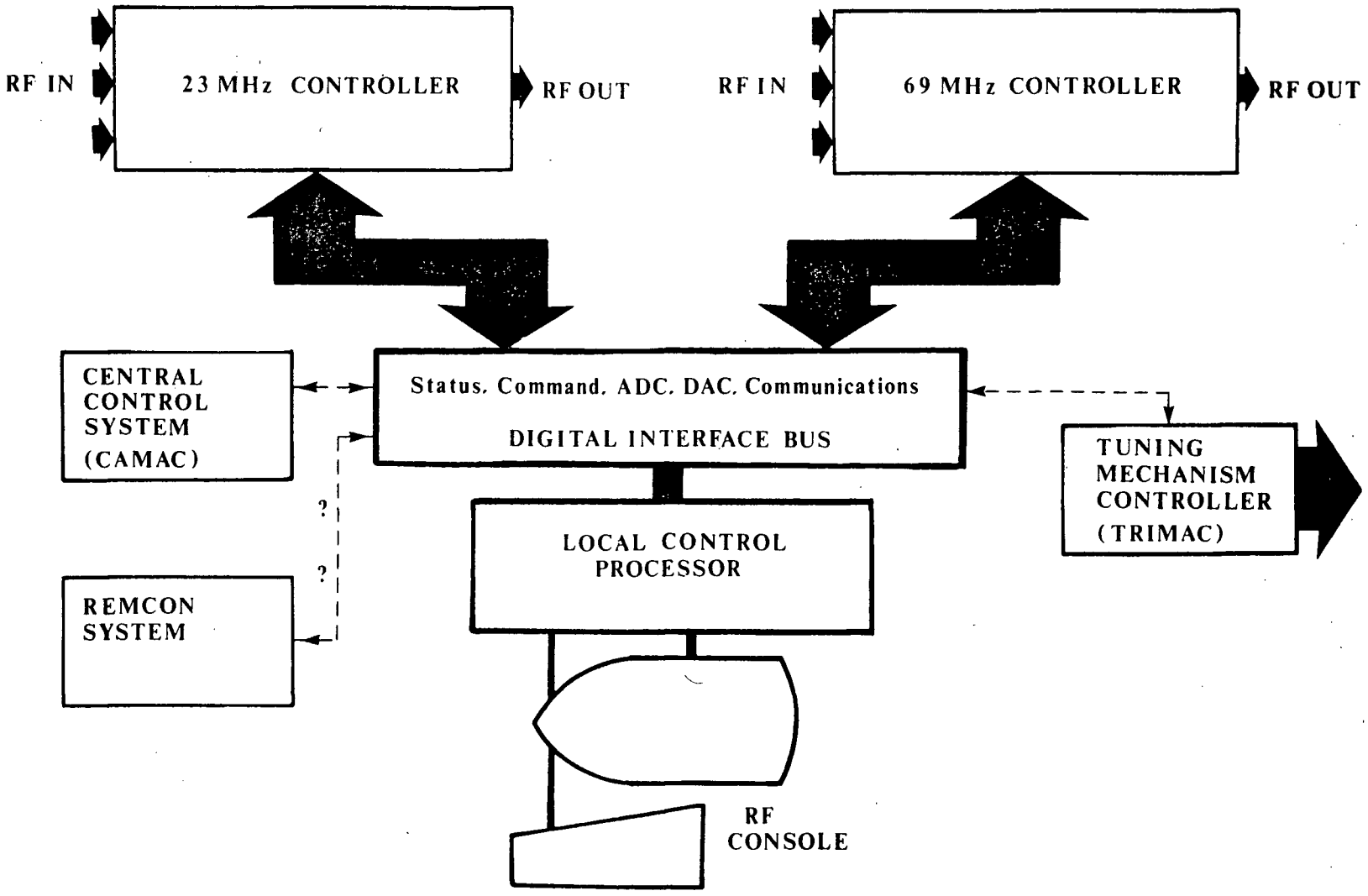

Fig. 4.5 The Local Control Processor and its Digital Interface Bus

processor could be programmed to "tune" the controller, i.e. to adjust the response of the compensation amplifiers to achieve the best regulation (adaptive control), as described above;

4. A fourth function, which was not investigated in this study, is interfacing the RF control system to the cyclotron central control system and to the RF console. Certain aspects of this important function are discussed in section 4.2, however.

Organization of the New RF Control System

The conceptual design of the new RF control system is shown in fig. 4.6. Its resemblance to the RF system in figure 4.3 is obvious although it emphasizes different aspects of the RF system and is, of course, more specific to the case of TRIUMF.

The block diagram shows the 23 MHz and 69 MHz RF drive signals originating from a common master oscillator. The 69 MHz signal is obtained by passing the 23 MHz signal through a frequency tripler. The signals pass through amplitude and phase modulators then to the RF power amplifiers. Details such as the use of coarse and fine modulators in cascade are omitted for clarity. The diagram emphasizes the need to use DC blocks to prevent problems with 60 Hertz ground loops. Attention to such seemingly minor details is very important given the harsh nature of the cyclotron environment and the degree to which the system is expected to regulate the amplitude and phase of the accelerating voltage.

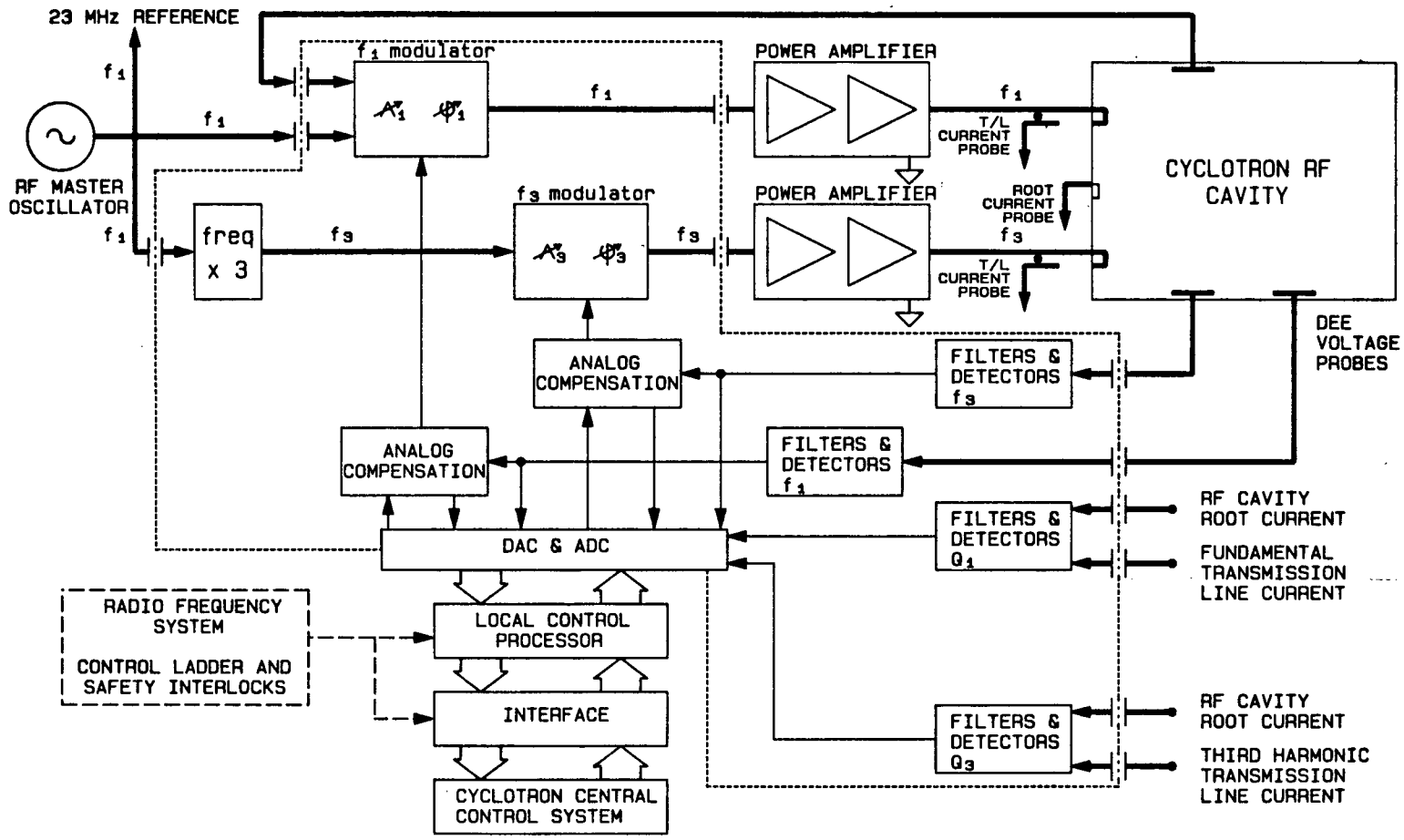

Fig. 4.6 General Configuration and Outline of the New RF Control System

-RF SIGNAL PATH
-CONTROL (LF) SIGNAL PATH
-ISOLATION
-DC BLOCKING OF RF SIGNAL PATHS
-DIGITAL STATUS LINES
-DIGITAL DATA PATH

Provision for Operating the System as a Feedback Oscillator

The major difference between fig. 4.6 and the generic control system shown in fig. 4.3 is the inclusion of provision for operating the RF system as a feedback oscillator. When the system is in self-excited mode, the frequency of operation is determined by the resonant frequency of the RF cavity not by the frequency of the master oscillator. When the resonant frequency of the cavity is changing rapidly, as it does during system start-up, it is often more convenient to switch the system into self-excited mode than it is to physically tune the RF cavity.

Self-excited mode is the traditional method for operating cyclotron RF systems and the reasons it was built into the existing existing control system are mainly historical [17]. Configuring the RF system as a feedback oscillator complicates the design of the RF system hardware in three ways:

a. It makes it necessary to include a new RF path for the self-excited feedback signal;

b. A glitch free method of switching between self-excited and driven mode must be devised; and,

c. It complicates the design of the control program.

An alternative technique (which eliminates the hardware complications) is to force the frequency of the master oscillator to track the resonant frequency of the RF cavity

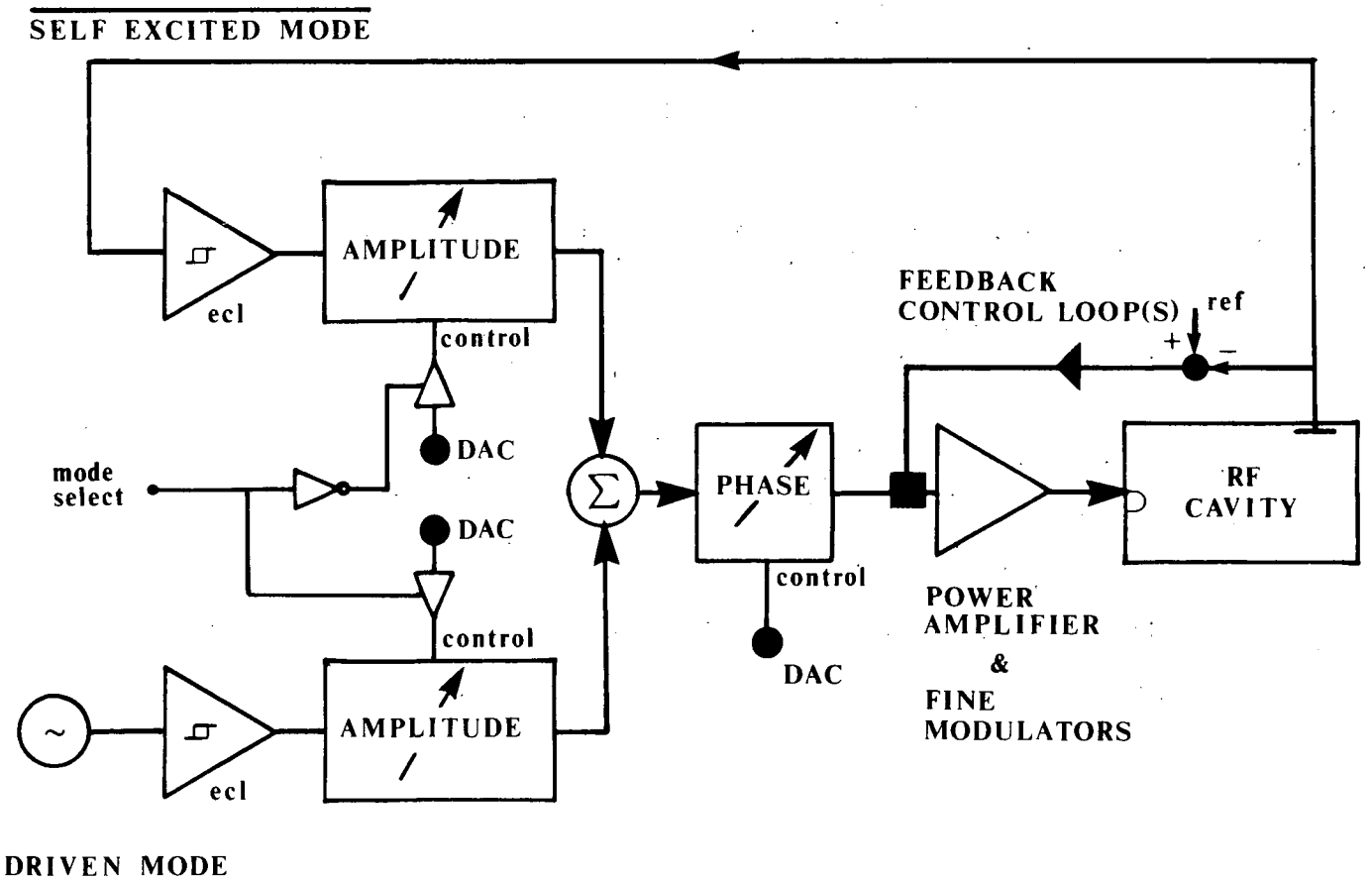

Fig. 4.7 New RF Control System - Provision for Operation in Self-Excited Mode

using the cavity tuning error signal. The same control algorithm that tunes the cavity when the system is in driven mode (fundamental) can also tune the master oscillator when the system is in this alternative "self-excited" mode.

Although both the existing RF control system and the prototype RF control system incorporate the hardware necessary for operating the RF system as a feedback oscillator, it is not required. The alternative technique should be implemented in its place although one caveat is associated with its implementation. Some high purity frequency synthesizers, such as the Hewlett-Packard HP 8656A, sometimes drop their output momentarily when switching their output frequency. The drop out is disastrous so far as RF system operation is concerned. No such problems were observed when the Rockland model 5600 frequency synthesizer was used to successfully drive both the RF test facility and the cyclotron RF system.

In a similar vein, it has been suggested that the frequency tripler that drives the frequency tripler that drives the 69 MHz RF modulator chain should be replaced by a 69 MHz master oscillator which would be phase locked to the 23 MHz master oscillator instead of using a frequency tripler, as illustrated. This would permit one to also set the third harmonic drive frequency independently of the fundamental drive frequency as might be required during system start-up. This possibility was discussed in chapter

three.

System Components

It is convenient to divide the new RF control system into five distinct sub-systems:

1. The accelerating voltage and cavity tuning error measurement sub-system (usually referred to as the RF detectors);
2. The master oscillator(s) which generate(s) the RF signals which drive the 23 MHz and 69 MHz power amplifiers and the two RF modulator chains which modify the amplitude and phase of the 23 MHz and 69 MHz RF drive signals in response to control signals from the analog controllers and the local control processor;
3. The four analog controllers which regulate the amplitude and phase of the cyclotron accelerating voltage (each controller modulates the amplitude or phase of the appropriate RF drive signal in response to the output of the RF detector sub-system);
4. The cavity tuning mechanism controller; and,
5. The local control processor and its peripherals (including a video display terminal and a VMEbus [18] [19] or CAMAC [20] type systems crate with both analog and digital interface ports) which:
    a. step the RF system through system start up and spark recovery sequences;
    b. keep the RF cavity tuned to the driving frequency;
    c. supervise the analog controllers; and,

d. manage communications between the various controllers, the RF system operators (through a video display terminal), and the cyclotron central control system (CCS) (through branch 5 of the CCS CAMAC parallel highway).

Responsibilities

It should be noted that the replacement of the existing RF control system is a major task so responsibility for its completion is divided among several groups at TRIUMF:

The specification and conceptual design of the new system was the responsibility of the RF Systems Group with assistance from the Cyclotron Development and Controls Hardware Groups and visitors to TRIUMF including L. Durieu of CERN (SPS Division) and P.K. Sigg of SIN;

The final version of the RF detectors and analog RF controllers will be designed and built by the TRIUMF RF Systems Group;

The tuning mechanism stepping motor controller and associated interfaces will be supplied by the TRIUMF Electronics Development Group;

The local control processor, its peripherals, and software development tools will be selected by the RF Systems and Cyclotron Development Groups in consultation with the Controls Hardware Group and the TRIUMF Electronics Shop;

RF Control System software will be designed and written in house by the RF Systems and Cyclotron Development Groups

in consultation with the Controls Software Group; and,

Responsibility for systems integration rests with the RF Systems Group.

4.2 SEQUENTIAL CONTROL OF THE RF SYSTEM

The four modes of RF system operation: pulsed mode, self-excited mode, driven mode (fundamental), and driven mode (flat-topped), and certain aspects of the conceptual design of the control program that will supervise the RF system during both system start up and normal operation are described in this section. Criteria for selecting the microcomputer (local control processor) to run the control program are discussed.

The control program initiates the sequence of events required to bring the accelerating voltage up to full value and ensures that the cavity tuning error does not exceed set bounds, as suggested by the annotated flow chart shown in fig. 4.8 and the timing diagrams in figs. 4.9(a) and (b). Because the primary function of the sequence controller is to ensure that the RF system operates in a safe and reliable manner, its role may be considered to be complementary to that of the analog (or process) controllers that stabilize the amplitude and phase of the accelerating voltage in order to produce an extracted beam with excellent characteristics.

The programmer's model of the prototype RF control system is presented in fig. 4.10. It describes the command and status registers on the CAMAC digital interface bus

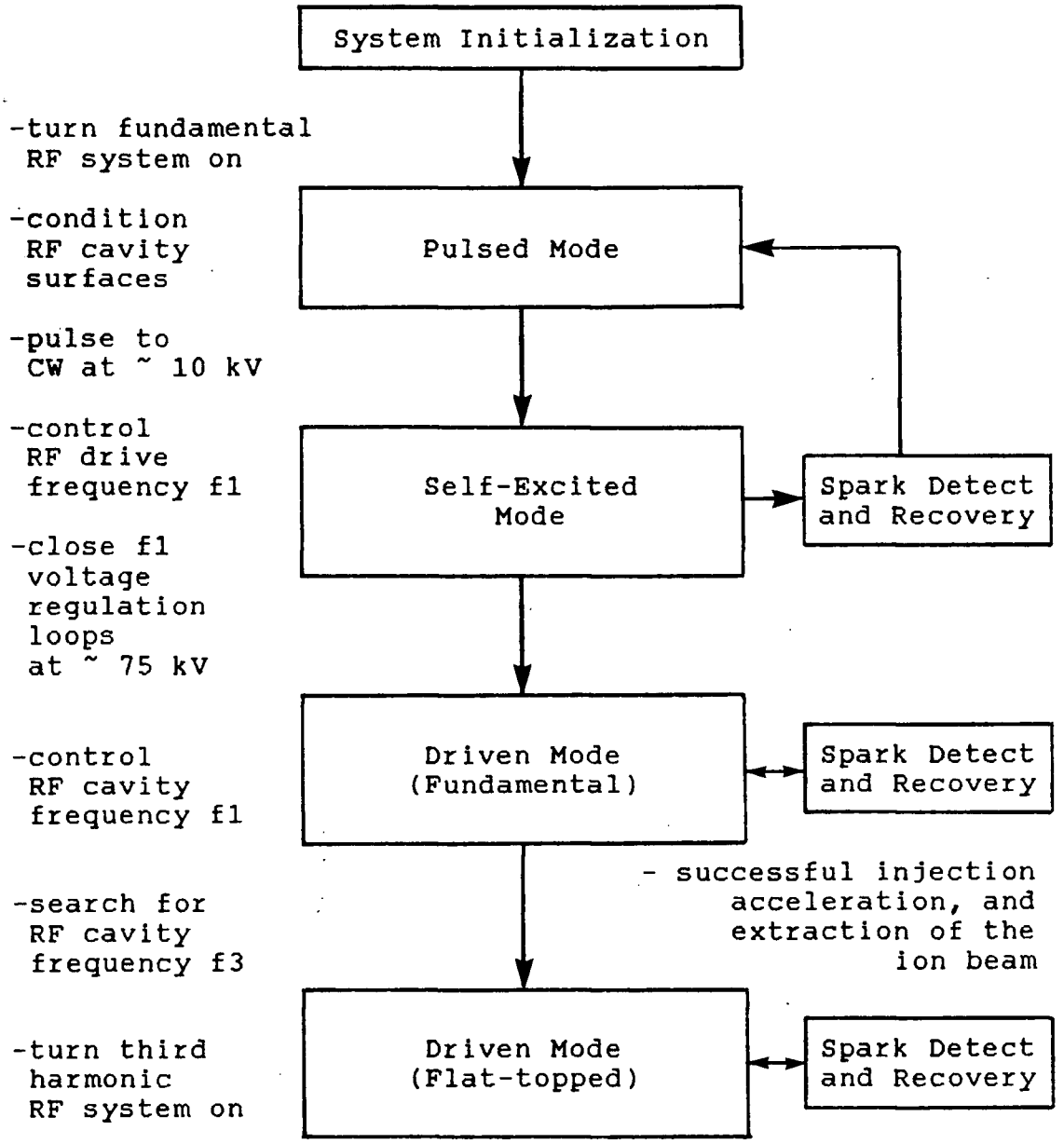

MAJOR FUNCTIONS - DRIVEN MODE / NORMAL OPERATION

- control RF cavity f1 and f3 frequencies
- detect sparking and recover to normal operation
- regulate accelerating voltage amplitude and phase
- control f1 and f3 modulator operating points
- read CCS command registers / set CCS status registers

Fig. 4.8 New RF Control System - Operating Modes

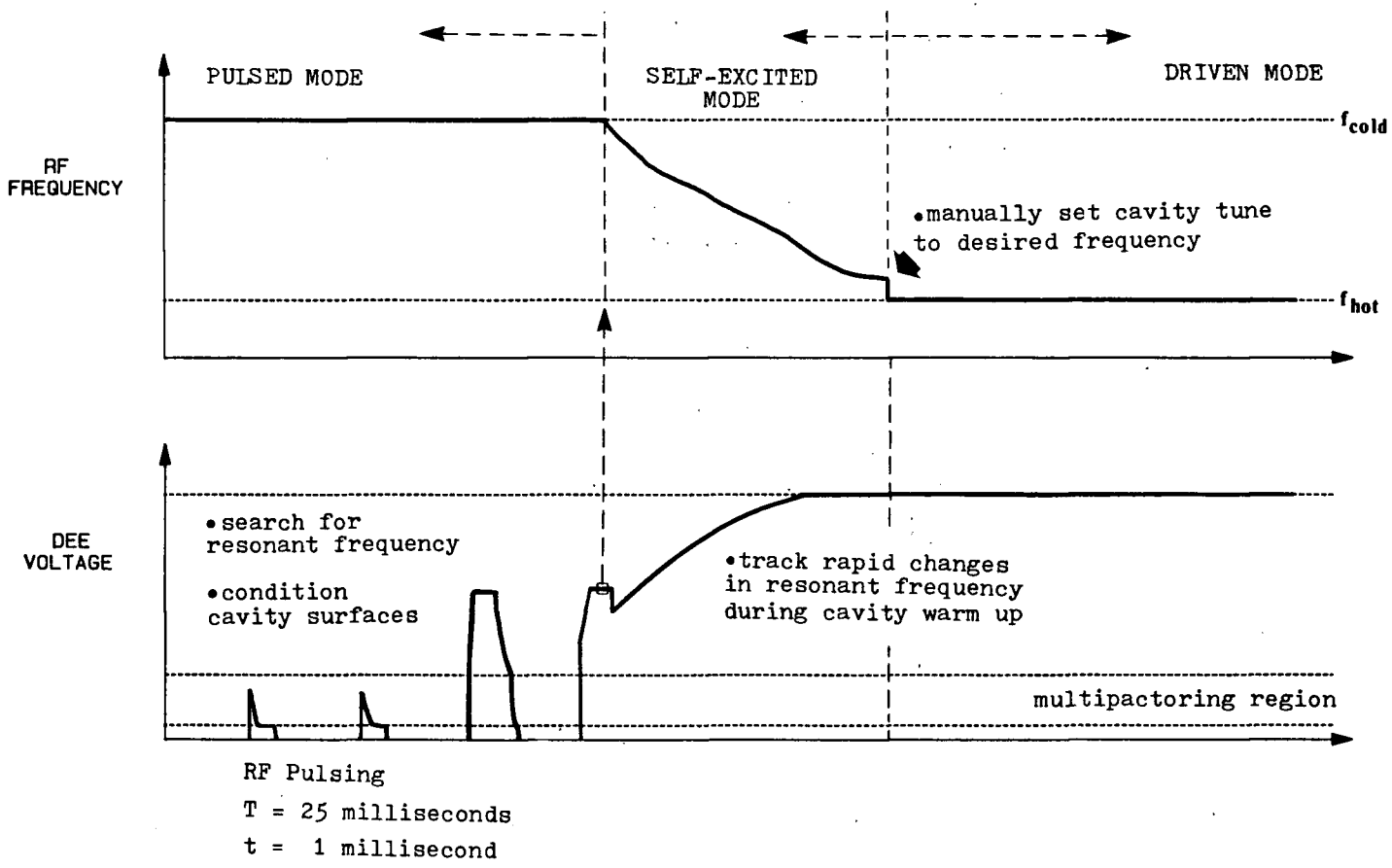

Fig. 4.9(a) RF System Operation During Start-Up

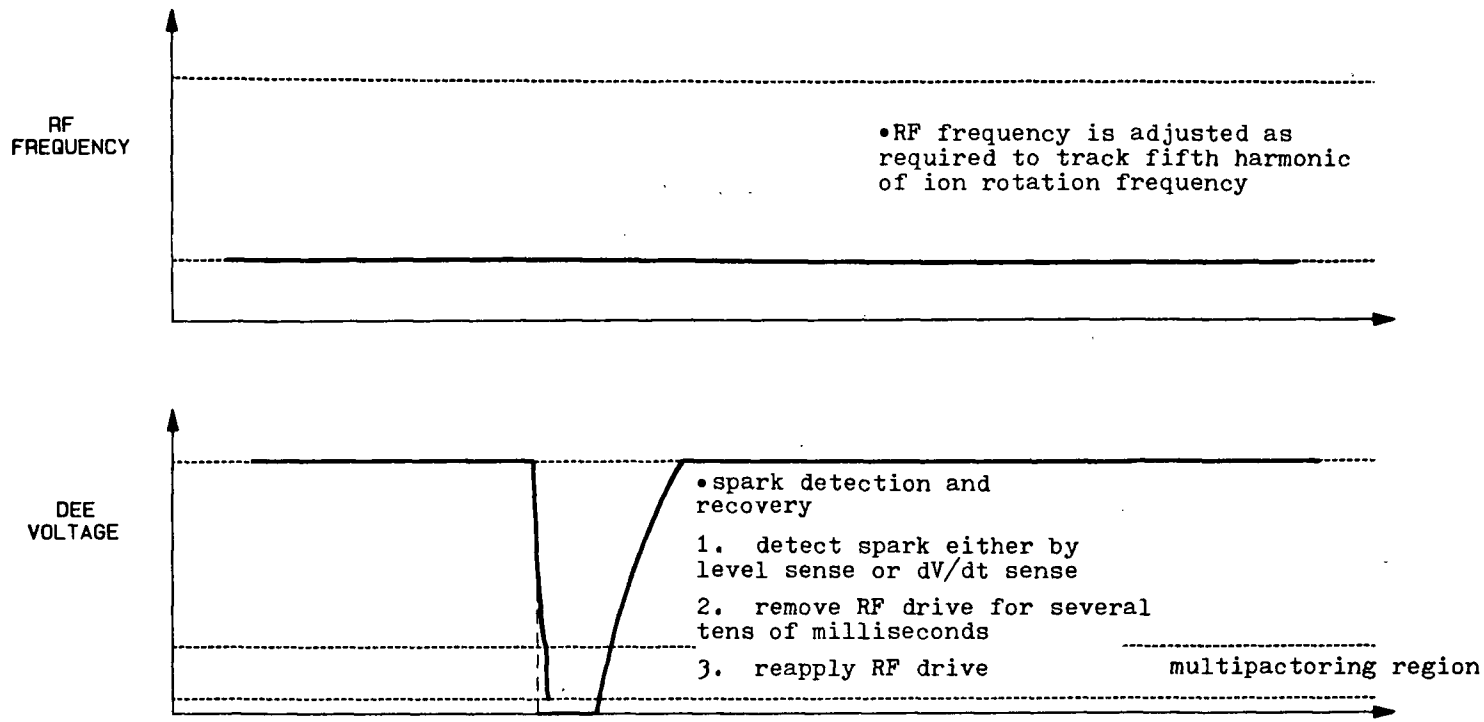

Fig. 4.9(b) RF System Operation in Driven Mode

Analog In	Analog Out	Parallel I/O
23 MHz Amplitude Control Detected Signal Error View 1 Error View 3 Phase Control Detected Signal Error View 1 Error View 3 Cavity Tuning Tuning Error View Forward Power Reflected Power (corresponding set for 69 MHz RF system also)	23 MHz Amplitude Control Open Loop Closed Loop Ref. Closed Loop Aux. Ref. Phase Control Open Loop 69 MHz Amplitude Control Open Loop Closed Loop Ref. Closed Loop Aux. Ref. Phase Control Open Loop Closed Loop Ref. Closed Loop Aux. Ref.	GPIB Digital Voltmeter Network Analyzer Spectrum Analyzer Input Latch* Spark Detector (23 MHz & 69 MHz) RF Voltage Presence Detector (23 MHz & 69 MHz) Output Latch* driven/self-excited rf on/rf off closed loop/open loop local/remote spark detector reset *(corresponding set for 69 MHz RF system RF system also)

Fig. 4.10 - Programmer's Model of the Prototype RF Control System

shown in fig. 4.13 of section 4.3.

4.2.1 Pulsed Mode and Spark Detection and Recovery.

It would be very convenient if it were possible to raise the cyclotron dee voltage to several tens of kilovolts at an arbitrarily slow rate. Most of the problems presently associated with RF cavity tuning (and RF system operation generally) would simply vanish and the complexity of the RF system control program would in turn be greatly reduced. Unhappily, this is not the case. Sparking and multipactoring in the TRIUMF RF cavity during system start up and the rapid thermal expansion (and detuning) of the cavity associated with the requirement that the RF drive power be pulsed on to a relatively high level so that the dee voltage can successfully pass through the multipactor discharge region make it necessary to adopt special procedures for system start up and for spark detection and recovery, as described in sections 3.5 (Demonstration of a Flat-topped Accelerating Voltage) and D.3 (Excitation of an Accelerator RF Cavity Under Vacuum). The following section describes a control program algorithm for operating the new RF control system in pulsed mode during system start-up.

PULSED MODE

RF Source:	Master Oscillator
Master Oscillator Frequency:	Manually Controlled by RF System Operator

Cavity Tuning (Fundamental):	Fixed
Cavity Tuning (Third Harmonic):	Fixed
Fundamental Amplitude Control:	Manually Controlled by RF System Operator (via Coarse Modulator) Control Loop Saturated; Reference set to > 90 kV RF Drive Pulsed by Toggling "RF_Enable" bit
Fundamental Phase Control:	Disabled
Third Harmonic Amplitude Control:	Disabled
Third Harmonic Phase Control:	Disabled
Supervisory Control Loops:	None

VARIABLE PARAMETERS:

PARAMETER		DEFAULT
Pulse Period	25	milliseconds
Pulse Duty Factor	1	millisecond
Pulse Amplitude	0	

FLAGS: Threshold (Status)

- indicates fundamental dee voltage is above a preset threshold

Pulse_to_CW (Command)

ALGORITHM:

1. Disable all analog controllers;
2. Set 23 MHz amplitude reference high to saturate control loop;
   (fine modulator -> minimum attenuation)

3. Set 23 MHz drive signal to minimum;
(coarse modulator -> maximum attenuation)

4. Begin pulsing routine
   a. set pulse amplitude to according to current input from operator
   b. pulse on for 1 millisecond
   c. if (Threshold and Pulse_to_CW)
      then go to SELF-EXCITED MODE
      else pulse off for 24 milliseconds
   d. go to "a"

The RF system is run in pulsed mode during system start-up to avoid problems caused by driving the amplifiers into a a highly variable and often poorly matched load.

The system is operated in a continuously pulsed mode until the cavity surfaces have been conditioned and the cavity is capable of sustaining a dee voltage pulse with sufficient amplitude, i.e. > 10 kV. The operator then adjusts the amplitude and frequency of the RF pulse until the dee voltage is about 10 kV and the waveform has a clean shape. This indicates that the cavity is being driven at its resonant frequency at a voltage well above the multipactoring threshold. Oscillographs showing the corresponding RF pulse waveforms were presented in fig. 3.21.

When the operator sets the "pulse_to_CW" flag, the routine pulses the RF drive on then checks the "threshold"

flag, i.e. it ensures that the dee voltage is above the multipactoring threshold and no electrical discharges (sparks/arcs) are taking place. If so, the system switches to self-excited mode. If not, the system continues pulsing until the condition is met.

4.2.2 Self-Excited Mode

The frequency of the RF drive signal should not differ by more than a few hundred Hertz from the resonant frequency of the RF cavity. If the cavity tuning error is too large, the RF amplifiers may be unable to deliver sufficient power to keep the accelerating voltage above the multipactoring threshold. Experience has shown that the resonant frequency of the cavity will drift as a function of:

a. the pressure of the cooling water in the cantilevered hot arms (the Bourdon effect);

b. the temperature of the cooling water in the cantilevered hot arms;

c. the temperature of the structure of the radio frequency cavity itself.

Some form of feedback control is necessary to keep the cavity's resonant frequency close to the driving frequency.

After the RF drive signal is switched from pulsed to CW, the dee voltage is ramped from the turn on value of about 10 kV to the operating value of between 85 and 100 kV. During this period, the power dissipated in the RF cavity by the accelerating mode increases by a factor of between 50 and

100. Until the RF cavity reaches thermal equilibrium, the resonant frequency of the cavity may change too quickly or too much for the mechanical automatic tuning system to compensate.

Although the frequency of the RF drive signal must remain fixed at the fifth harmonic of the ion rotation frequency during normal operation, there is no such restriction during system start-up. While the dee voltage is ramped to operating value, the RF system is run in self-excited mode - the RF frequency is made to track the resonant frequency of the RF cavity instead of vice versa.

There are two methods of accomplishing this:

a. configure the RF cavity/power amplifier/modulator chain as a feedback (Barkhausen) oscillator;

b. force the frequency of the master oscillator to follow the the resonant frequency of the cavity.

Provision for investigating both options was built into the prototype of the new RF control system.

SELF-EXCITED MODE (Option I - Feedback Oscillator)

RF Source:	Dee Voltage Probe
Master Oscillator Frequency:	Fixed (not used)
Cavity Tuning (Fundamental):	Fixed
Cavity Tuning (Third Harmonic):	Fixed
Fundamental Amplitude Control:	Manually controlled by RF System Operator (via Coarse Modulator)

	Control Loop Saturated Reference set to > 100 kV
Fundamental Phase Control:	RF Drive Enabled Tuning Controller via Coarse Modulator
	Fine Modulator Control Loop Disabled

Third Harmonic Amplitude Control:	Disabled
Third Harmonic Phase Control:	Disabled

PARAMETERS:	Pulse Period	25 milliseconds
	Pulse Duty Factor	1 millisecond
	Pulse Amplitude	variable
	Fundamental Amplitude	variable
	Max_Tuning_Error	to be determined
	Min_Tuning_Error	to be determined
FLAGS:	Threshold	(Status)
	Pulse_to_CW	(Command)

ALGORITHM:

In self-excited mode (I), the RF system is configured as a feedback oscillator as described in section 4.1. The frequency of operation is determined by the resonant frequency of the RF cavity and maintained by satisfying Barkhausen's criterion - the loop gain must be equal to one and the net phase shift around the loop, which can be adjusted using the coarse phase modulator, must be equal to zero degrees [20].

During "pulsed" or "driven" operation, the power amplifier is driven by a signal from the master oscillator

(frequency synthesizer) but during self-excited (I) operation, the power amplifier is driven by the signal developed across the dee voltage probe. Both signals are presented to the RF modulator chain - they pass through separate RF limiting amplifiers (so they have similar amplitudes) and coarse amplitude modulators. They are combined, then pass through common coarse phase, fine phase, and fine phase modulators, as shown in fig. 4.7.

The mode of operation is selected by toggling a command bit. When the driven mode is enabled, the self excited mode is disabled and vice versa. Section 4.3 contains a more complete description of the modulator chain hardware.

During system initialization, the 23 MHz coarse phase shifter and 23 MHz self-excited coarse amplitude modulator are set to pre-determined values for operation in self-excited mode (I). This ensures that the Barkhausen criterion (open-loop gain and phase-shift) for feedback oscillation will be met at an RF frequency of about 23 MHz and a peak dee voltage of about 5 kV. If a spark is detected while the system is in self-excited mode, the RF drive is turned off for 24 milliseconds then pulsed back on with the "Pulse_to_CW" flag set.

Although simple in concept, the Barkhausen oscillator option makes the control system hardware unnecessarily complicated. Alternatively, the cavity tuning controller can be used to adjust the frequency of the master oscillator

rather than the RF cavity during system start-up, as discussed in section 3.5 and section 4.1. The corresponding control program sequence is listed below.

SELF-EXCITED MODE (Option II - Variable Frequency Source)

RF Source:	Master Oscillator
Master Oscillator Frequency:	Set by Tuning Controller
Cavity Tuning (Fundamental):	Fixed
Cavity Tuning (Third Harmonic):	Fixed
Fundamental Amplitude Control:	RF System Operator (via Coarse Modulator) Control Loop Saturated RF Drive Enabled
Fundamental Phase Control:	Disabled
Third Harmonic Amplitude Control:	Disabled
Third Harmonic Phase Control:	Disabled

PARAMETERS:	Pulse Period	25 milliseconds
	Pulse Duty Factor	1 millisecond
	Pulse Amplitude	variable
	Fundamental Amplitude	variable
FLAGS:	Fundamental_Threshold	(Status)

ALGORITHM: (following pulsed mode...)

1. Wait 0.5 seconds

2. IF (.not.Threshold)
   THEN go back to pulse_to_CW mode

```
---------------------------------------------

3.      IF (tuning_error > max_error)

        THEN adjust master oscillator frequency
             until (tuning_error < min_error)

4.      IF (spark_detected)

        THEN turn off RF for 24 milliseconds and
             go back to pulse_to_CW mode

5.      set fundamental amplitude according to

        current input from operator

6.      Go To 3

---------------------------------------------
```

4.2.3 Closing the Amplitude Feedback Control Loop

It is easier to operate the RF system in pulsed or self-excited mode if the analog control loops are disabled, i.e. the amplitude and phase of the RF drive signals are not dependent on the amplitude and phase of the accelerating voltage. One way of doing this is to physically switch the input of the fine modulator driver from the controller output to a fixed bias. To "close the loop", one would simply switch back.

Depending on the initial state of the feedback capacitors in the compensation amplifiers, however, transients having rather large amplitudes might be generated during the switch over. Such transients in the accelerating voltage phase would have little effect on the operation of the RF system but similar transients in the

accelerating voltage amplitude could be very difficult to deal with, particular if they caused the accelerating voltage to dip beneath the multipactoring threshold. In any event, a clean transition is definitely preferable. Fortunately, there is an easy way of ensuring that the 23 MHz (or 69 MHz) amplitude controller makes a smooth transition from open to closed loop control during the process of ramping the dee voltage from about 10 kV to operational values.

The error amplifier used in the amplitude controllers is designed to saturate if the effective difference between the reference and actual dee voltages is greater than about 10 kV. If the reference is set more than 10 kV higher than the actual dee voltage, the fine amplitude controller is turned completely on and small changes in the dee voltage do not affect it. Thus only changes in the attenuation introduced by the coarse amplitude modulator, which is under manual control, affect the amplitude of the RF drive signal. By setting the 23 MHz amplitude reference signal to the equivalent of 90 kV or greater, the controller operates in essentially open loop mode until the accelerating voltage has reached operational values. Once the desired dee voltage has been reached, the reference voltage is then lowered until the error amplifier comes out of saturation. A smooth transition is thus made from open loop to closed loop control.

The fine amplitude and phase modulators are operated at a fixed bias with the controller output superimposed on it. The transfer characteristics of the modulators are highly non-linear, however, so it is desirable to keep the operating point fixed so the differential open loop gain remains predictable. One way of doing this is to keep the analog controller output near zero. Once the RF control system is actively controlling the amplitude and phase of the accelerating voltage, a relatively slow supervisory control loop adjusts the relative attenuation of the two sets (amplitude and phase) of fine and coarse modulators in such a way that the output of the compensation amplifiers, as measured at test point Error_View 3, stays near zero.

ALGORITHM:

1. Operator notes that cyclotron dee voltage has been successfully ramped to desired value and requests that the accelerating voltage amplitude control loop be closed. Error_View 3 should be > 0.
2. DO UNTIL 23 MHz amplitude reference is equal to desired value:
   a. Decrement 23 MHz amplitude reference
   b. IF (Error_View 3 < 0)
      THEN increase coarse attenuation
3. Accelerating voltage is now being actively regulated. Begin operation of the relatively slow supervisory control loop

designed to keep the mean value of Error_View 3 near zero and thus ensure that the fine modulators are driven near the desired operating point.

The existing RF control system closes the accelerating voltage regulation loop immediately upon entering self-excited mode since the RF system must apparently be pulsed on at full power in order for the dee voltage to successfully pass through multipactoring threshold. This requirement that the amplitude control loop be closed at that time can be waived by resetting the coarse amplitude modulator to the CW amplitude level immediately upon entering self-excited mode.

Closing the accelerating voltage phase control loop will be much easier, as noted above. Merely toggling the Phase Control Enabled/Disabled command bit will probably be sufficient.

4.2.4 Driven Mode

In order to successfully accelerate the ion beam, the RF system frequency must be fixed at five times the ion rotation frequency. Once the resonant frequency of the RF cavity has stabilized, the RF system operators can switch to driven mode. The master oscillator frequency is fixed (except for small adjustments to match it to the fifth harmonic of the ion rotation frequency) and the tuning controller begins to drive the cavity tuning error signal to

zero by suitably adjusting the tuning actuators - the resonator cooling water pressure control valve in the case of the existing RF system and the ground panel tip adjustor stepping motor in the case of the RF systems test facility. The cyclotron's new fundamental mode tuning mechanism has not yet been selected, as noted in chapter three.

DRIVEN MODE

RF Source:	Master Oscillator
Master Oscillator Frequency:	Fixed - Set by Operators
Cavity Tuning (Fundamental):	Set by Tuning Controller
Cavity Tuning (Third Harmonic):	Fixed
Fundamental Amplitude Control:	RF System Operator (via Control Reference) Control Loop Active RF Drive Enabled
Fundamental Phase Control:	Control Loop Active
Third Harmonic Amplitude Control:	Disabled
Third Harmonic Phase Control:	Disabled

PARAMETERS:	Pulse Period	25 milliseconds
	Pulse Duty Factor	1 millisecond
	Pulse Amplitude	variable
	Fundamental Amplitude	variable
	Max_Tuning_Error	to be determined
	Min_Tuning_Error	to be determined
FLAGS:	Fundamental_Threshold	(Status)
	Pulse_to_CW	(Command)

TRANSITION ALGORITHM:

Once the cavity has been conditioned, the resonant frequency of the cavity has stabilized, and the dee voltage amplitude and phase regulation loops have been closed, one can consider switching to fixed frequency operation, i.e. driven mode. Operation is almost exactly as in self-excited mode with active regulation of the accelerating voltage before except that the cavity tuning error is cancelled by tuning the cavity instead of adjusting the coarse phase shifter or the master oscillator frequency.

1. Under manual control, set the resonant frequency of the cavity to the desired frequency.
2. Adjust the amplitude and phase modulator operating points as required.
3. Tune the radio frequency cavity:

```
IF (tuning_error > max_error)

THEN adjust cavity tuning actuator
     until (tuning_error < min_error)
```

4. Was a Spark Detected?

```
IF (spark_detected/RF disabled)

THEN  wait 5 - 10 milliseconds, then re-
      enable RF drive
```

5. Go to 2

4.2.5 Flat-topped Mode

Operation with the third harmonic is similar to the above since the fundamental and third harmonic control

systems are, by design, almost identical. The major differences were noted in chapter three and are briefly summarized here:

When the fundamental mode is present in the RF cavity, the third harmonic mode's multipactoring threshold is essentially zero. The third harmonic RF drive power can be ramped to operational levels at an arbitrarily slow rate which eliminates the need to pulse the RF drive during start-up. This, in turn, eliminates most of the difficulties associated with the rapid thermal expansion and detuning of the RF cavity that accompanies start-up of the fundamental RF system. It is not absolutely necessary that one be able to run the third harmonic RF system in either pulsed or self-excited mode but since the fundamental and third harmonic control systems are virtually identical, the appropriate fundamental RF functions could be adapted for use on the third harmonic system with only minimal effort and may prove useful when the cyclotron's third harmonic RF system is being commissioned.

The search for the third harmonic resonant frequency of the cavity and the automatic tuning procedure would be much as described in chapter three. The technique of saturating the amplitude control loop until the dee voltage reached operational levels would probably be used, as would the procedures for spark detection and recovery since it was found that they simplified operation of the RF systems test facility in flat-topped mode.

4.2.6 The RF Console and the Local Control Processor

Most important RF system components can be manually controlled from the console including the position of the tips of the number eight resonator segments, the variable capacitors in the transmission line matching section, the main transmitters and their power supplies, the temperature and pressure of the resonator cooling water hence the resonant frequency of the RF cavity, and the amplitude, phase, and frequency of the RF signals that drive the fundamental and third harmonic transmitters.

The RF console is usually unmanned except during system start-up or when the RF system requires special attention. During normal operation, responsibility for setting selected RF system operating parameters such as RF drive frequency, system mode (driven or self-excited) and relative amplitude and phase of the third harmonic accelerating voltage (when the third harmonic RF system is commissioned), and for monitoring the RF system is passed to the cyclotron central control system and the cyclotron operators.

When the RF system becomes "unreliable", as it does from time to time, or during system testing, the task of restoring reliable operation is directed from the RF console. Efficient access to operating data in real time would speed up identification and correction of problems.

A large set of conventional panel meters and the central control system's REMCON (remote console) system

enable RF system operators to monitor the operation of most RF system components from a central location. These components include the RF transmitters and their DC power supplies, the RF safety system, the RF accelerating voltage and cavity tuning control system, and the large set of parameters available from REMCON, such as the temperature of the resonator strongbacks in the RF cavity. Unfortunately, accessing them is often rather awkward due to the rather primitive nature of the REMCON system. Also, when the RF safety system trips, the lack of appropriate indicators often makes it difficult to identify the particular interlock that failed. Improvements in this area should greatly decrease the down time attributed to RF problems.

The Cyclotron Development Group is developing new information displays for the RF console using data acquired from the central control system. Real-time graphic displays of cyclotron parameters such as:

a. dee voltages at various locations along the accelerating gap; or,

b. resonator temperatures at various points in the RF cavity and software generated mimic panels of various components of the RF system;

are planned.

There has been some question whether the computer that supervises the RF control system should also interrogate the central control system and generate the RF console display.

Such a consideration dictates the type of computer, display, and software development tools that one would specify for the new control system. Thus, until the design of the new RF console becomes somewhat more concrete, the selection of a local control processor and the design of software to run the new control system must remain somewhat abstract.

Nevertheless, most of the control system functions that will be implemented in software (and which are described in section 4.2) have been successfully tested on the RF systems test facility using a TRIMAC 8085-based CAMAC microcomputer running under the CP/M operating system. The programming environment is sufficiently unfriendly, however, that further software development has been postponed until a more powerful system is selected to serve as the local control processor in the final version of the new control system.

Once the control program has been properly defined, the task of selecting the local control processor can begin. Although the convenience of the local control processor's programming environment, including support of site standard graphics terminals, will be an important selection criteria, the acceptance of the processor as a site standard by the TRIUMF Technology and Administration Division, which will ensure that local software and hardware support is available, will probably have the largest influence on the final choice.

The present site standard for local control is the TRIMAC 8085-based CAMAC auxiliary processor developed at TRIUMF. Advanced versions of the TRIMAC support 32K of EPROM and 4K of RAM. An S-100/CP/M 2.2 development system is available which can be used to develop programs for stand alone applications or to run large applications directly from the operating system. The TRIMAC has been used as a local control processor during the initial development of the prototype radio frequency control system but the complexity of the Fortran-80 support libraries and the long compile and link time made program development extremely inconvenient. Experience with the prototype control program "RF_Host" tends to suggest that a microcomputer with capabilities similar to the IBM personal computer would satisfy the major requirements and would eliminate the need for a special digital interface bus. Manufacturers such as Tecmar, Inc. provide all the analog and digital input and output available in the prototype CAMAC crate, with the exception of the IEEE 488 interface, on a single PC expansion board.

4.3 THE PROTOTYPE RADIO FREQUENCY CONTROL SYSTEM

In this section, a brief description of the prototype version of the new RF control system is presented. Bischof [21], Sigg [22], Meisner, Edwards, Fitzgerald, and Kerns [23], Brown, Ciapala, Hansen, Peschardt, and Sladden [24], and Howard [25], among others, have described the technical problems (and solutions) encountered in the implementation of somewhat similar accelerator RF control systems.

4.3.1 Physical Description

The components of the prototype RF control system are illustrated in fig. 4.11 as they are mounted in a 19 inch relay rack at the test facility:

a. the 23 MHz frequency synthesizer (Rockland Model 5600) that drives both the 23 MHz RF modulators and the frequency tripler that drives the 69 MHz RF modulators;

b. the 23 and 69 MHz analog control crates (see fig. 4.12) that house the RF detectors, analog controllers, and RF modulators;

c. the CAMAC crate (see fig. 4.13) that houses the ADC's, DAC's and digital I/O ports that interface the analog control crates and the cavity tuning motor controller to the local control processor (VAX-11/730); and,

d. the TRIUMF Model 0650/2 stepping motor drivers and power supply that are used to tune the RF cavity.

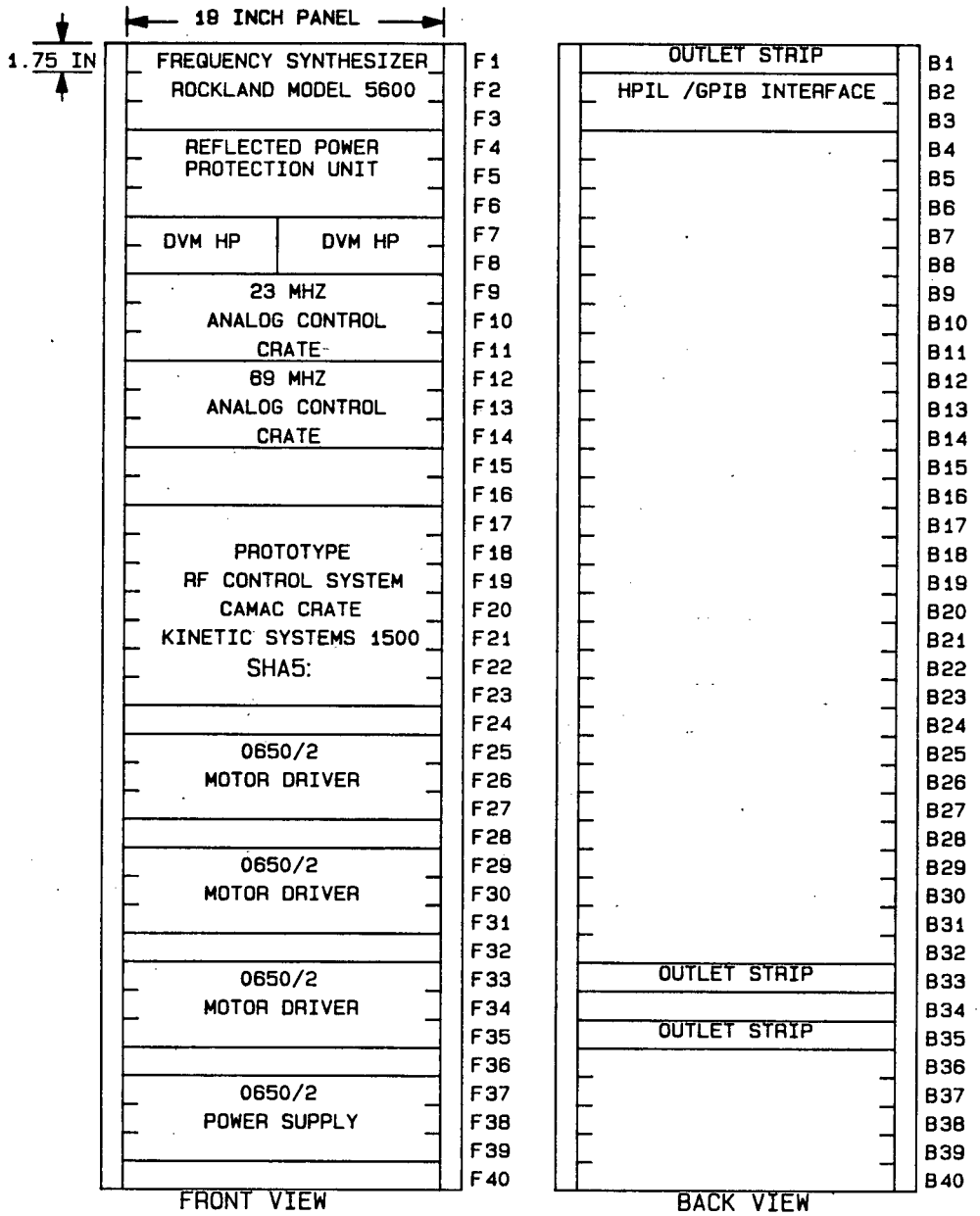

Fig. 4.11 RF Systems Test Facility - RF Controls Rack

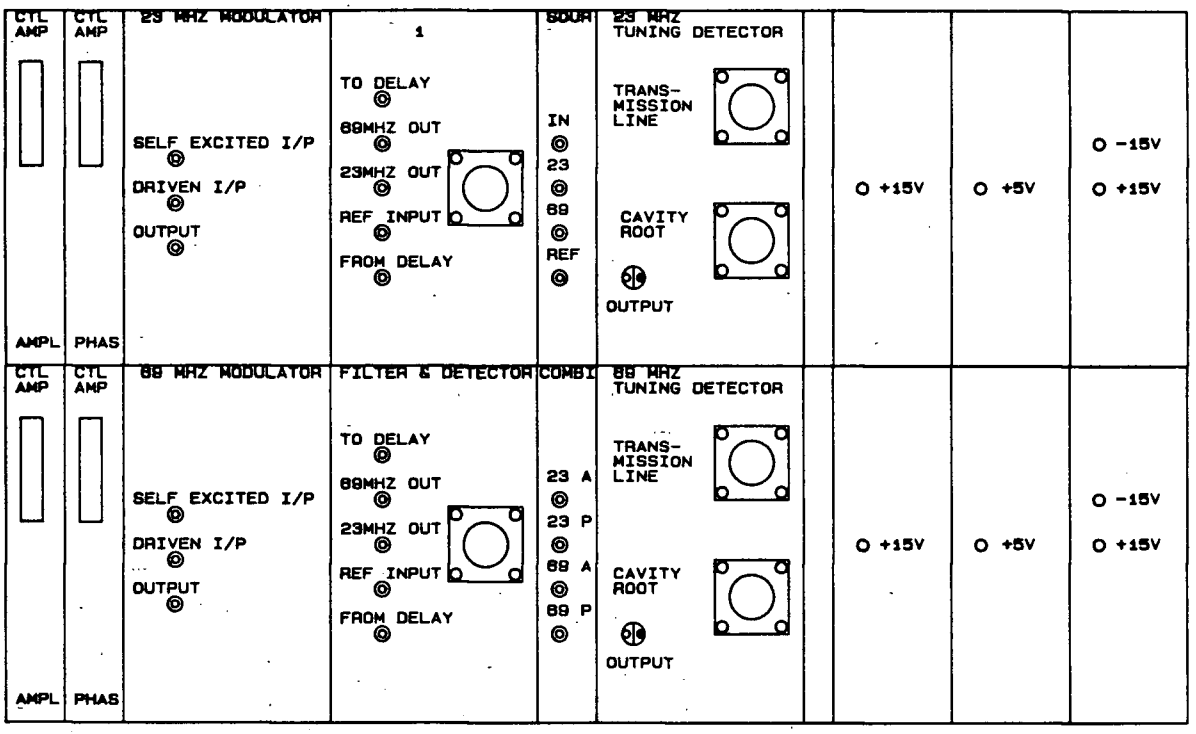

(a) Front Panel

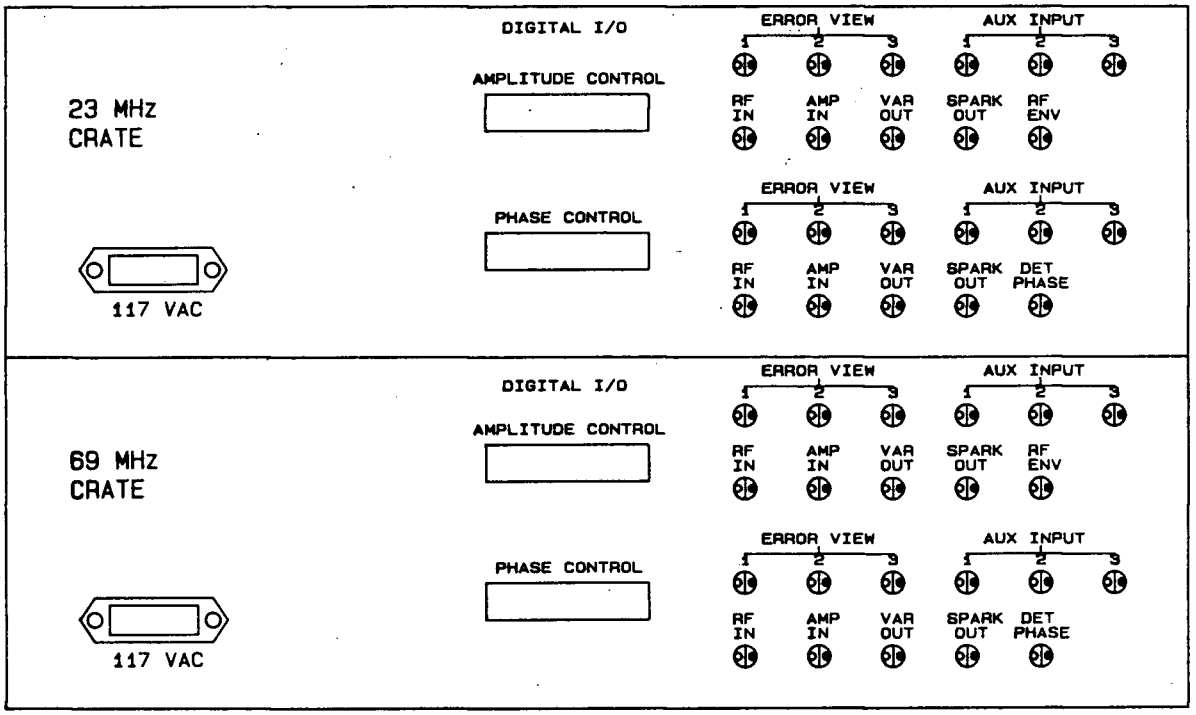

(b) Rear Panel

Fig. 4.12 Prototype RF Control System - Analog Signal Processing Crates

CAMAC CRATE ASSIGNMENTS

CRATE NO.: SHA5 RF SYSTEMS TEST FACILITY

CRATE SLOT NO. LOCATION FRONT VIEW	CTS LOGICAL NAME	FUNCTION AND DESCRIPTION	MODEL NO.
25	RFCRATE	TYPE L-2 CRATE CONTROLLER INTERFACE TO VAX-11/730 VIA CAMAC SERIAL HIGHWAY.	KS 3952
24			
23	RFGPIB	GPIB INTERFACE INTERFACE TO DIGITAL VOLTMETER, AND NETWORK, SPECTRUM, & FFT ANALYZERS.	KS 3388
22			
21	RFSLAVE	TRIMAC MICROCOMPUTER (MOTOR CONTROL)	TR 0544
20	RFMASTER	TRIMAC MICROCOMPUTER (MOTOR CONTROL)	TR 0544
19	RFHOST	TRIMAC MICROCOMPUTER (LOCAL CONSOLE)	TR 0544
18	RFDISPLAY	TRIMAC MICROCOMPUTER (DIAGNOSTIC MODULE)	TR 0544
17			
16			
15	RFCOMM	COMMUNICATIONS INTERFACE	KS 3340
14	RFMEMORY	CAMAC MEMORY (128 WORDS X 24 BITS)	TR 2401
13	RFIGOR3	INPUT GATE/OUTPUT REGISTER (4 BITS)	TR 0576/1
12	RFIGOR2	INPUT GATE/OUTPUT REGISTER (4 BITS)	TR 0576/1
11	RFIGOR1	INPUT GATE/OUTPUT REGISTER (4 BITS)	TR 0576/1
10	RFINPUT	DUAL 24 BIT INTERRUPT GATE	TR 0519
9	RFFREQ	DUAL 24 BIT OUTPUT REGISTER	TR 0454
8	RFOUT2	DUAL 24 BIT OUTPUT REGISTER	TR 0454
7	RFOUT1	DUAL 24 BIT OUTPUT REGISTER	TR 0454
6	RFDAC3	DAC - 8 CHANNELS 10 BITS (MODIFIED)	
5	RFDAC2	DAC - 8 CHANNELS 10 BITS (MODIFIED)	KS 3110
4	RFDAC1	DAC - 8 CHANNELS 10 BITS (MODIFIED)	KS 3110
3	RFADC	ADC - 32 CHANNELS 12 BITS	JO ADC-32
2	RFDATAWAY	SYSTEM MONITOR AND DATAWAY DISPLAY	KS 3291
1	RFSWITCH	24 BIT MANUAL INPUT GATE	KS 3461

Fig. 4.13 Prototype RF Control System - CAMAC Interface

The reflected power protection unit is a standard hardwired safety interlock which cuts the RF drive to the power amplifiers if the reflected power exceeds a preset threshold. A similar circuit was described by Bowick [26]. A block diagram of the test facility's safety system (not including the power amplifier control ladders) is shown in fig. 4.14. Digital voltmeters (Hewlett-Packard model 3468B) are used to monitor the output of the 23 and 69 MHz amplitude detectors. The two DVM's are mounted directly above the analog control crates.

The RF cavity tuning controller is shown in fig. 4.15. The CAMAC-based stepping motor controller system was developed by the Electronics Development Group for general purpose use at TRIUMF. The stepping motor system was modified and installed on the RF systems test facility by B. Evans and D. Morris.

4.3.2 The RF Source and Modulator Sub-Systems

The RF signals that drive the power amplifier are generated by the RF source and modulator sub-system. It consists of three major components:

a. the RF source;

b. the RF modulators;

c. the RF modulator drivers.

The RF Source

The output of the RF source must have low phase noise and high frequency stability. Although the final control

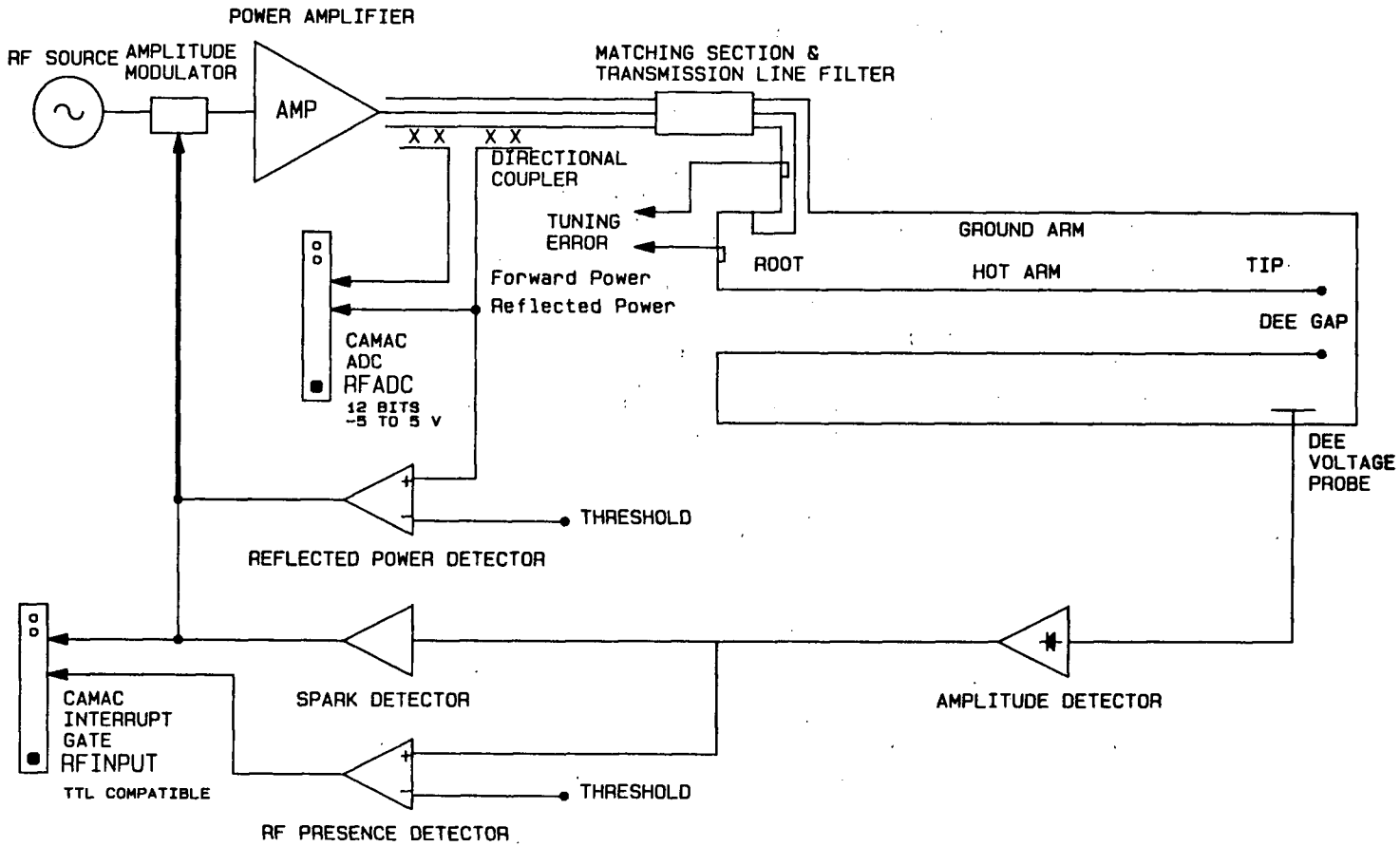

Fig. 4.14 RF Systems Test Facility - Safety System

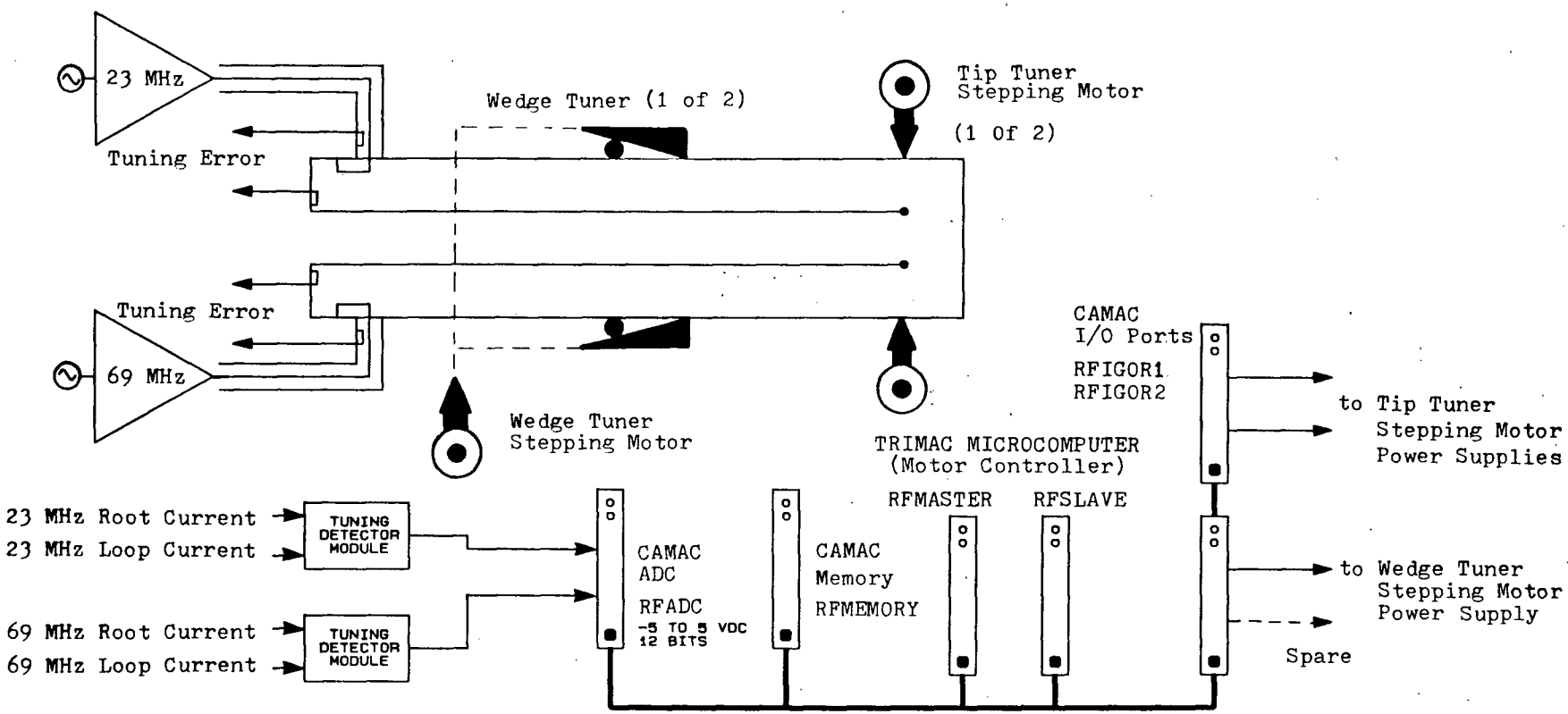

Fig. 4.15 RF Systems Test Facility - Cavity Tuning Controller

Notes:

1. The RFMASTER processor provides a high level interface between the user and the RFSLAVE processors that directly control the position, velocity, and acceleration of the individual stepping motors.

2. Commands, acknowledgements, and data are passed between the user, RFMASTER, and RFSLAVE through a set of registers referred to as a CAMAC Memory.

system design will probably use separate phase-locked frequency synthesizers for generating 23 and 69 MHz drive signals to permit more flexible operation of the RF system, the prototype system included a frequency tripler to generate the 69 MHz drive signal. The prototype RF source is shown in fig. 4.16. A Rockland model 5600 was used because they were available on site. Models from other vendors are probably just as suitable although some synthesizers, notably the Hewlett-Packard model 8656, are designed to momentarily drop their output when a new frequency is selected until the signal stabilizes, as noted in section 4.1, and are obviously not suitable.

The frequency tripler and RF buffers are based on MECL line receivers type MC 10115. The design was based on considerations presented by Blood [27] and Motorola Semiconductor [28]. All modulator input signals, including the signal derived from the dee voltage probe that is used in self-excited mode, are passed through ECL Schmidt triggers (e.g. 10115 A in fig. 4.16) to give them a common amplitude and thus simplify the problem of setting the coarse amplitude modulators.

The RF Modulator Chain

The 23 MHz RF modulator sub-system is shown in fig. 4.17. It consists of the RF modulator chain and the RF modulator drivers. After both the master oscillator and dee voltage probe signals pass through RF limiters, they pass through their respective coarse modulators, then are

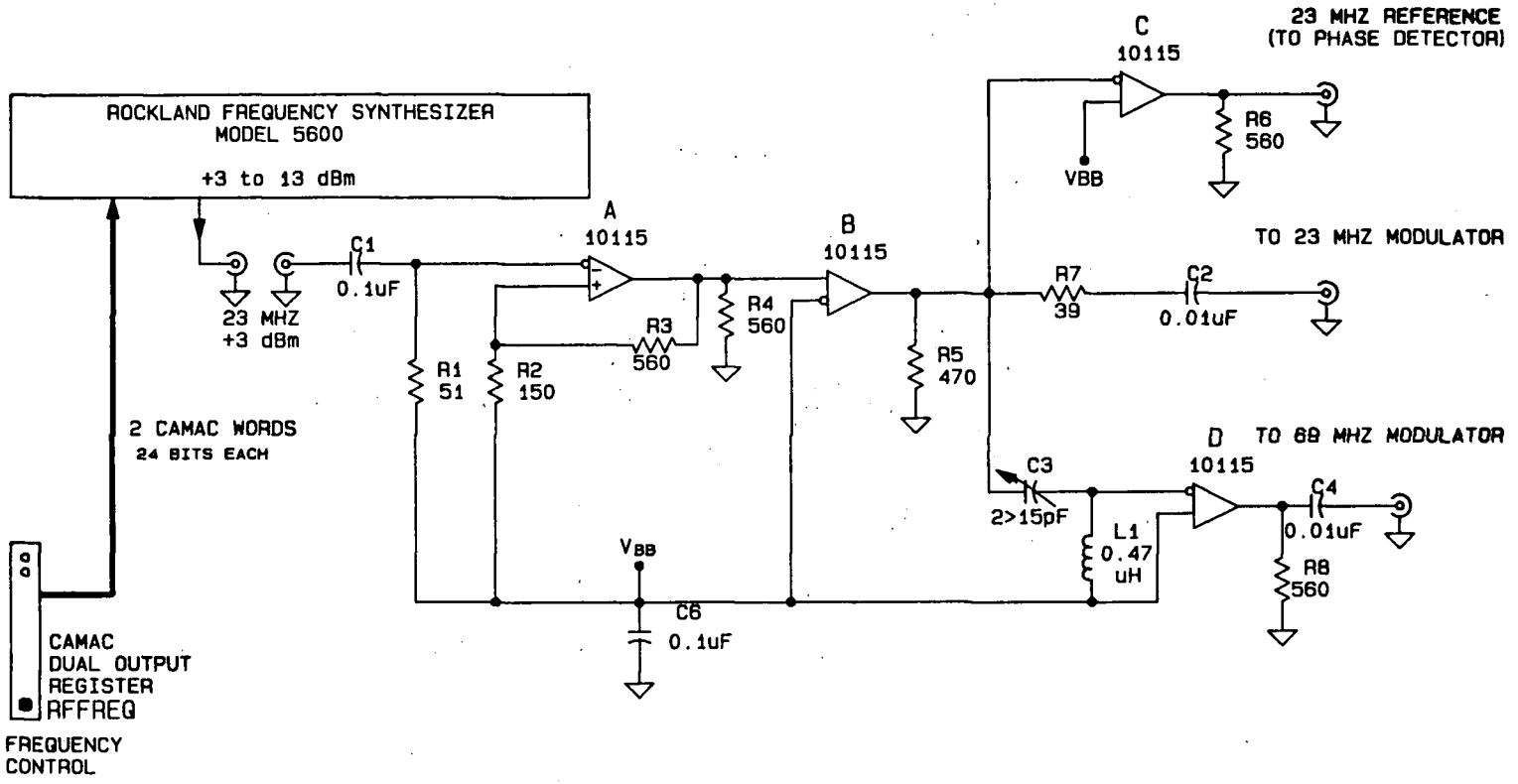

Fig. 4.16 Prototype RF Control System - RF Source

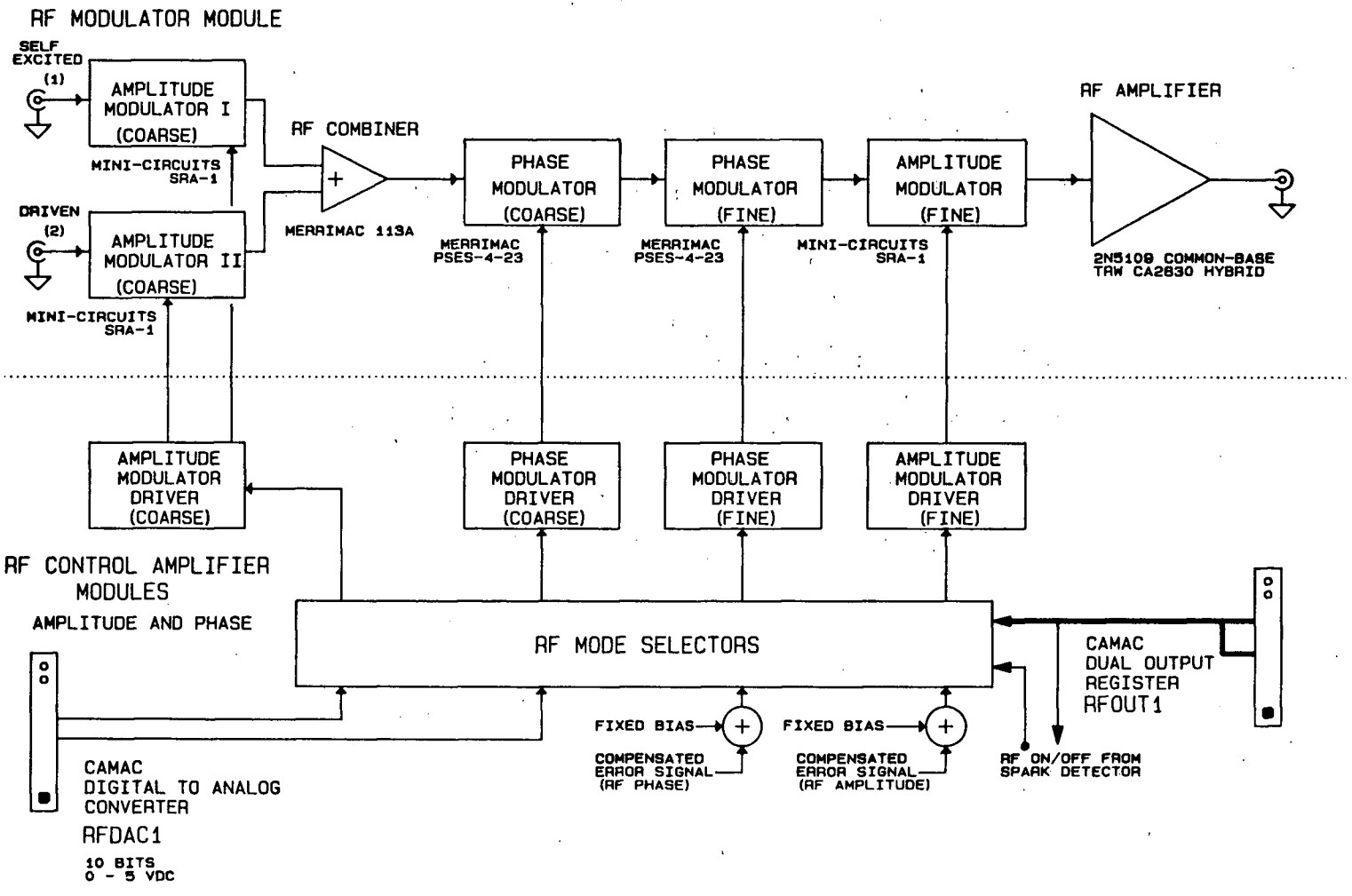

Fig. 4.17 New RF Control System - RF Modulator Chain

combined. The combined signals pass through a coarse phase modulator, a fine phase modulator, a fine amplitude modulator, and finally an RF amplifier that boosts the RF drive signal to the level required by the input to the power amplifier chain.

The amplitude and phase modulators used in the prototype control system are commercially manufactured units. The units used in the final control system design will be chosen on the basis of their static transfer characteristics and frequency response and their stability with changes in temperature.

The components used in the prototype RF control system modulator chain were chosen because they were easily procured. The three principal components, the PSES-4 electronic phase shifter [30], the SRA-1 balanced mixer/amplitude modulator [31], and the RF amplifier/buffer (based on a common base 2N5109 followed by a TRW CA 2830 thin film hybrid RF gain block [32] are shown in fig. 4.18. Details regarding their principles of operation are described in the references.

The amplitude and phase transfer characteristics of the SRA-1 and PSES-4 modulators are plotted in figs. 4.19 and 4.20. Note that the SRA-1 is a current controlled device and the PSES-4 is a voltage controlled device. Although the insertion phase of the SRA-1 is quite constant over a large range of control current, the insertion loss of the PSES-4

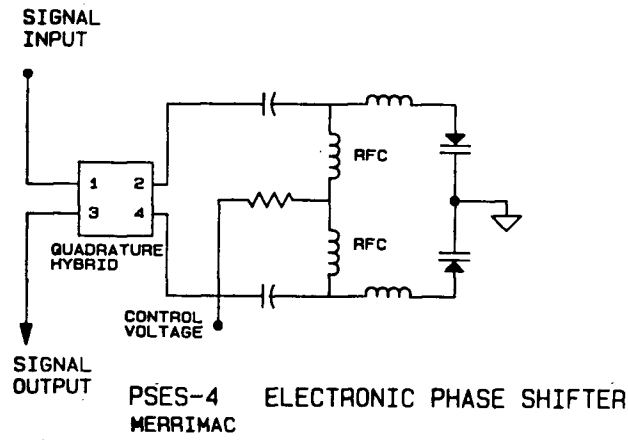

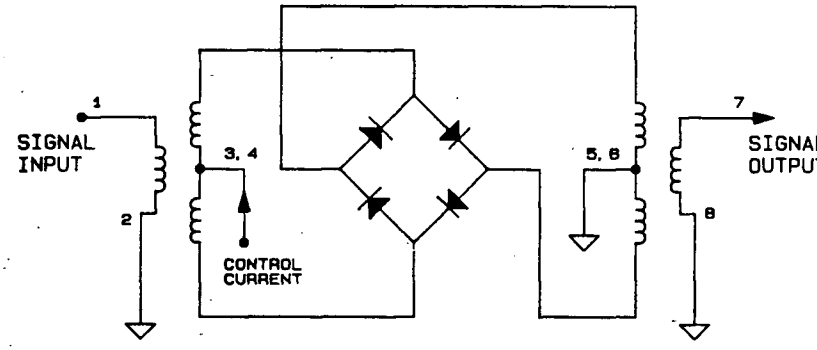

SRA-1 BALANCED MIXER/AMPLITUDE MODULATOR
MINI-CIRCUITS LABORATORIES

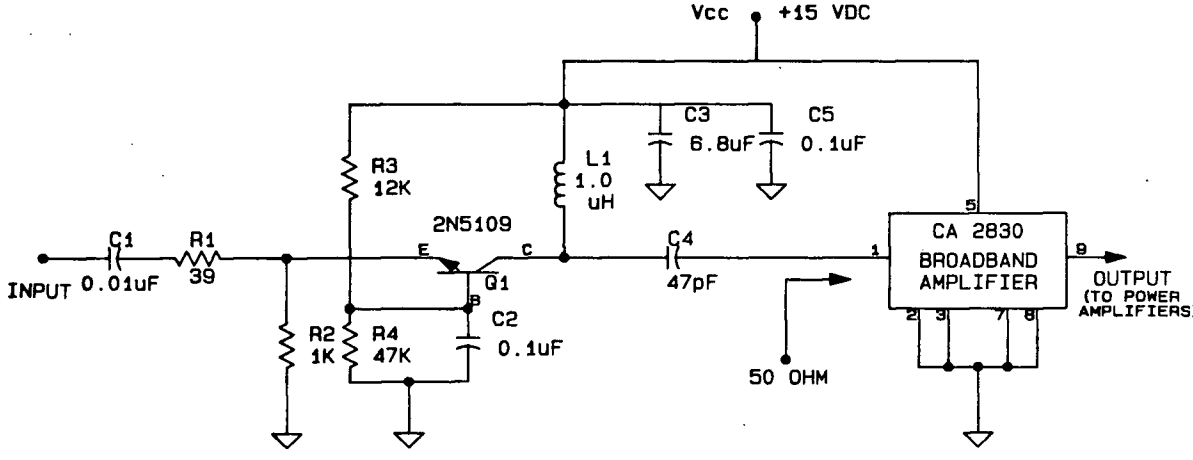

RF AMPLIFIER/BUFFER

Fig. 4.18 Components of the RF Modulator Chain

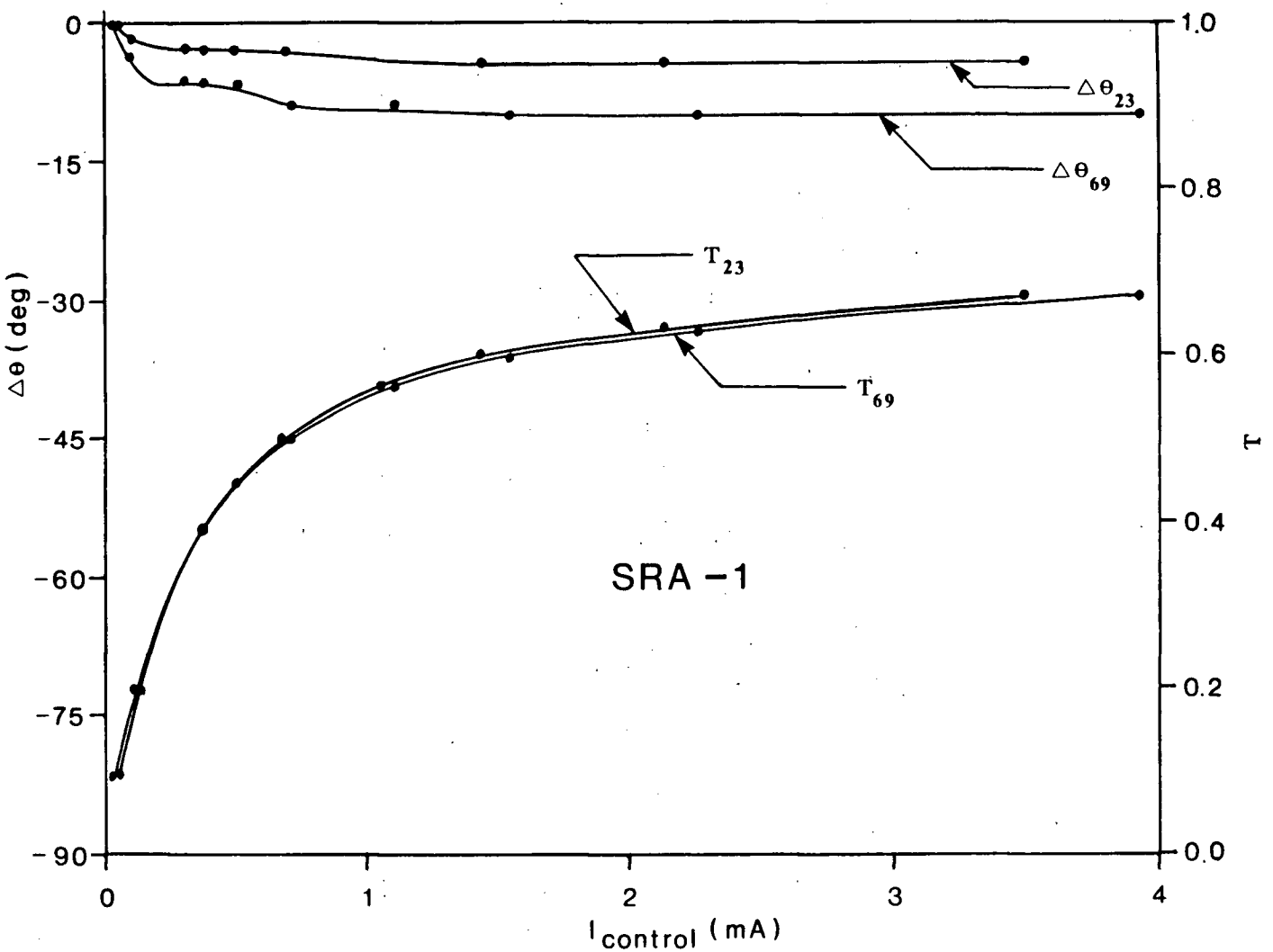

Fig. 4.19 Amplitude and Phase Transfer Characteristics - SRA-1 Balanced Mixer/Amplitude Modulator

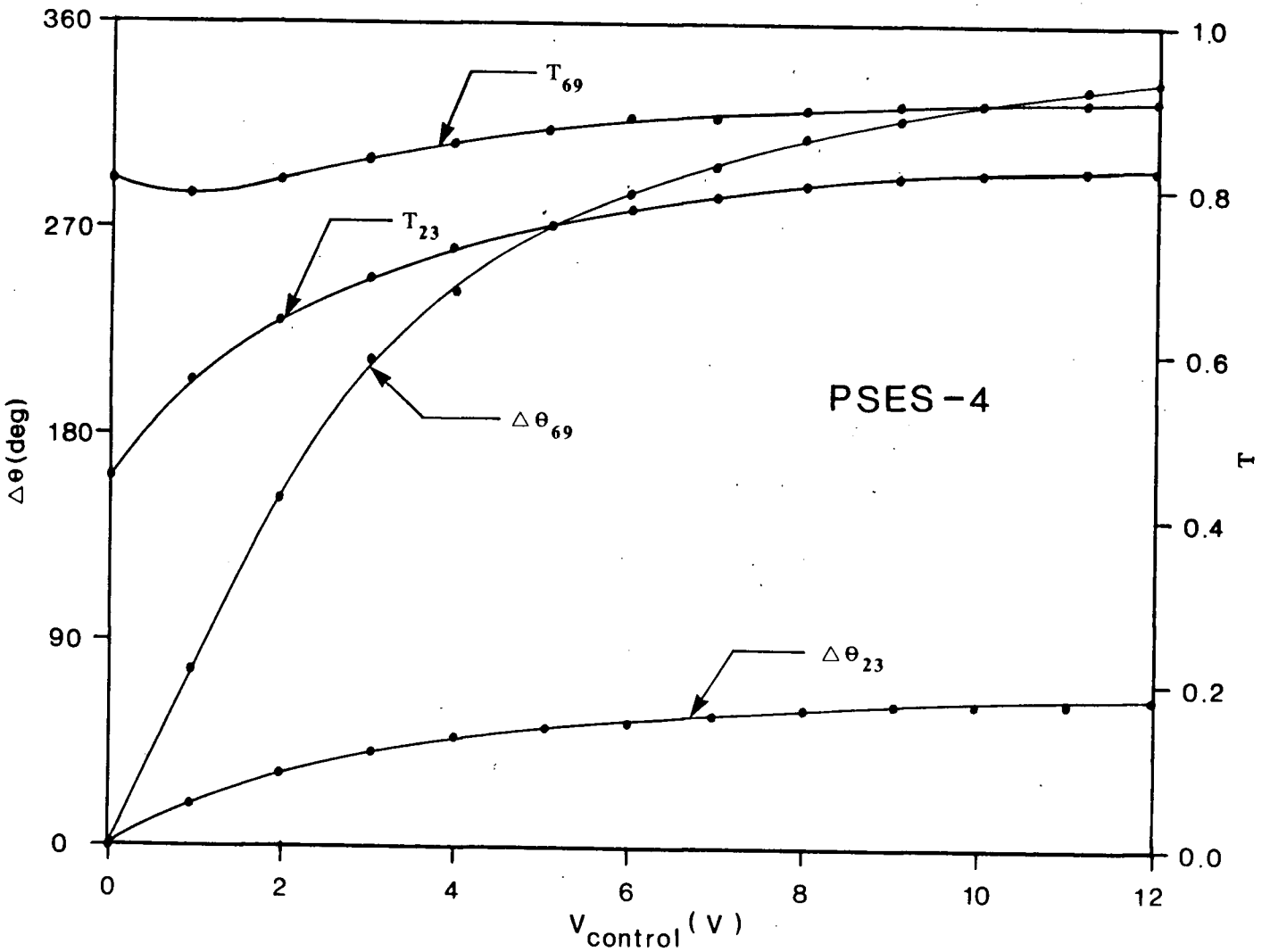

Fig. 4.20 Amplitude and Phase Transfer Characteristics - PSES-4 Electronic Phase Shifter

varies markedly over a large range of control voltage. For this reason it was decided to imbed the RF amplitude control loop within the RF phase control loop.

The modulator drivers are shown in figs. 4.21 and 4.22. As described earlier, the fine modulators are driven by the compensated error signal superimposed on a fixed bias while the coarse modulators are set directly by the local control processor. The coarse amplitude modulator driver must also provide a mechanism for smoothly switching the control current from the driven to self-excited modulator or vice versa. When node A2 is held high, Q1 is switched off and all the control current from Q1 flows through the Q3 which drives the modulator. When node A2 is held low, Q1 is turned on and diverts most of the control current from Q3. C1, the 2.7 uF capacitor, slows (and smoothes) the transition from a few microseconds to several milliseconds.

4.3.3 Analog Controllers

The difference between the measured value of the RF amplitude or phase to be controlled and the required set point is generated by a differential gain stage shown in fig. 4.23. The stage consists of three circuits:

a. the measured signal input buffer;

b. the reference signal input buffer;

c. the difference amplifier.

The measured signal input buffer is an op amp based voltage follower. Its main purpose is to provide some

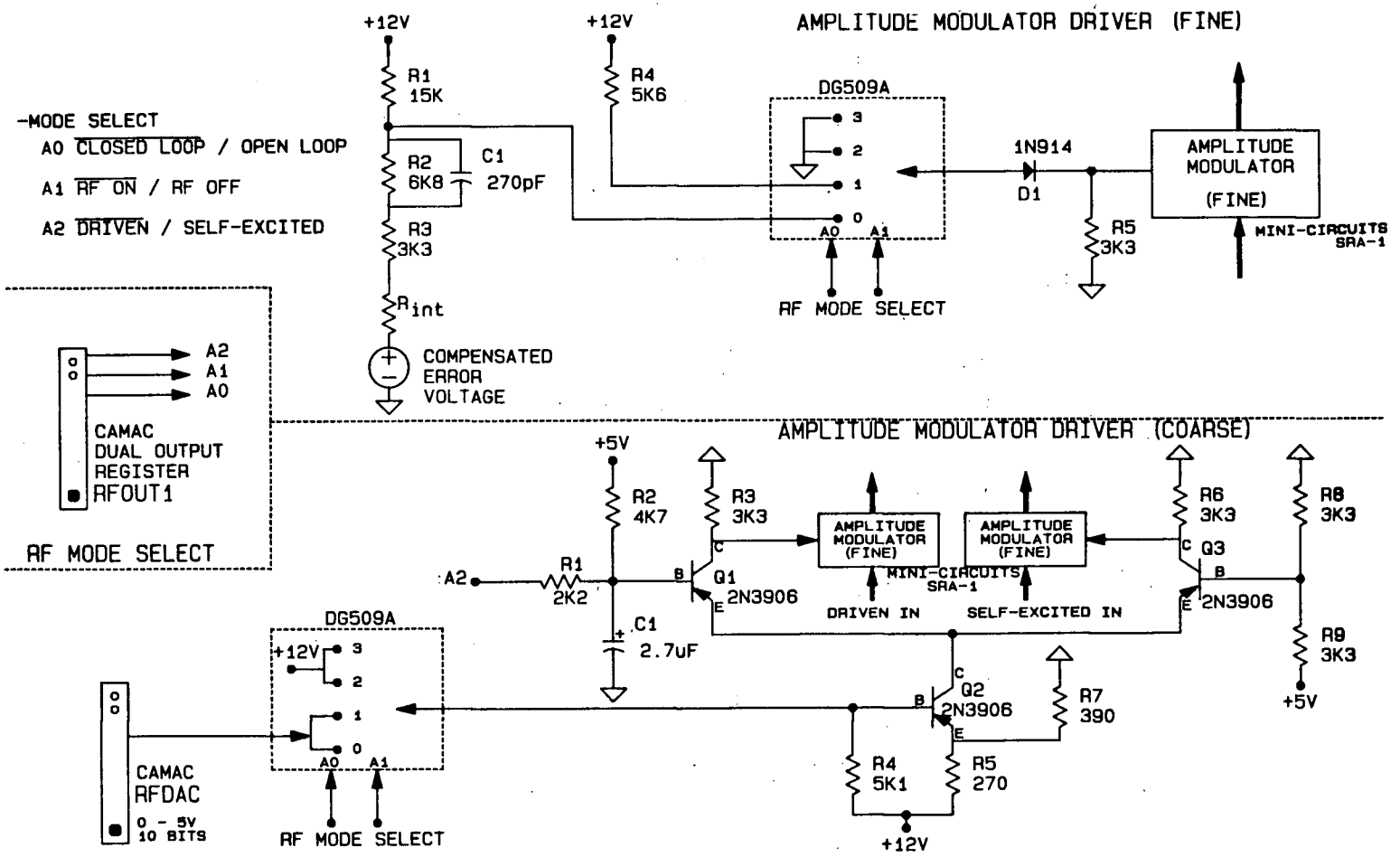

Fig. 4.21 Prototype RF Control System - RF Amplitude Modulator Drivers

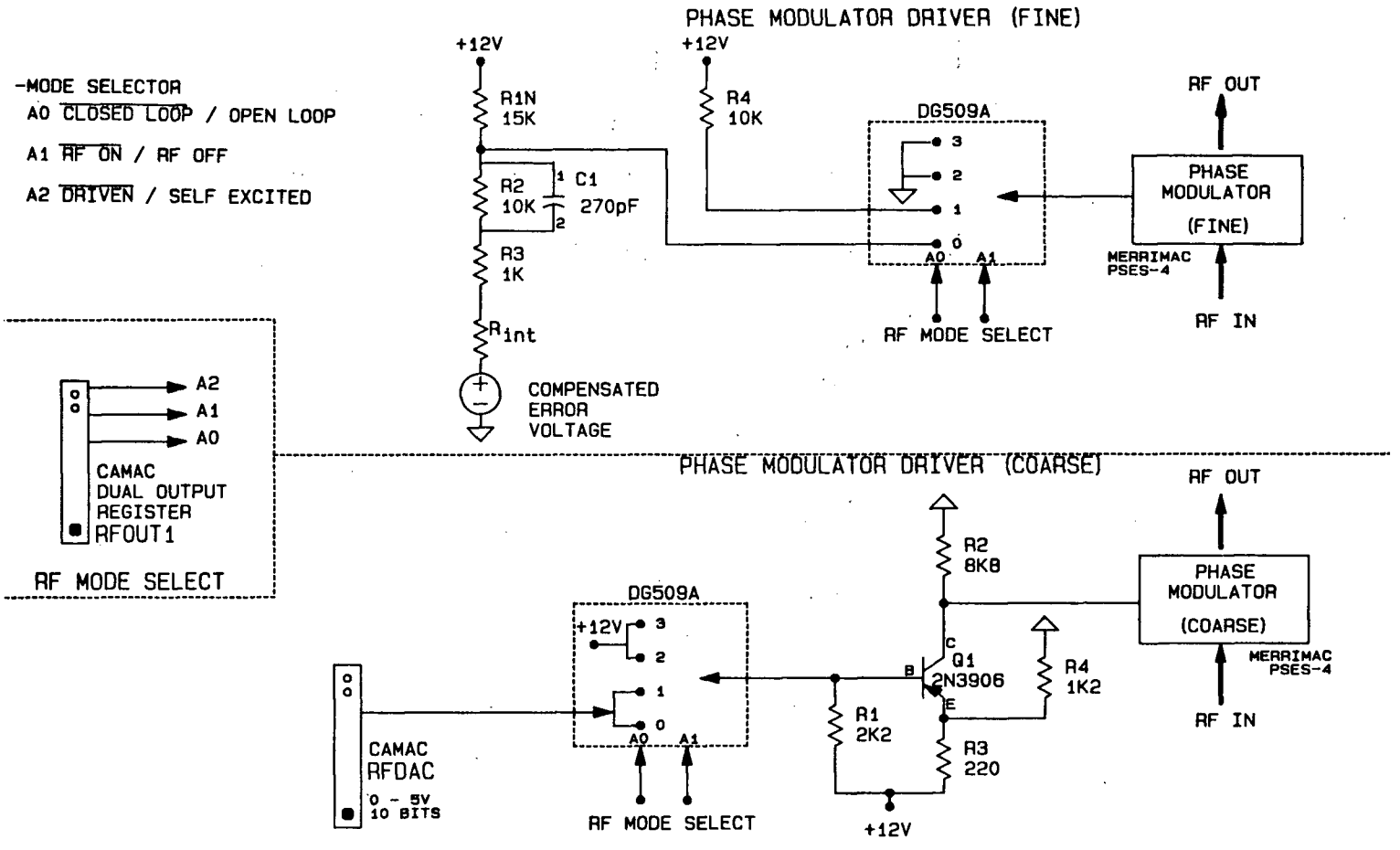

Fig. 4.22 Prototype RF Control System - RF Phase Modulator Drivers

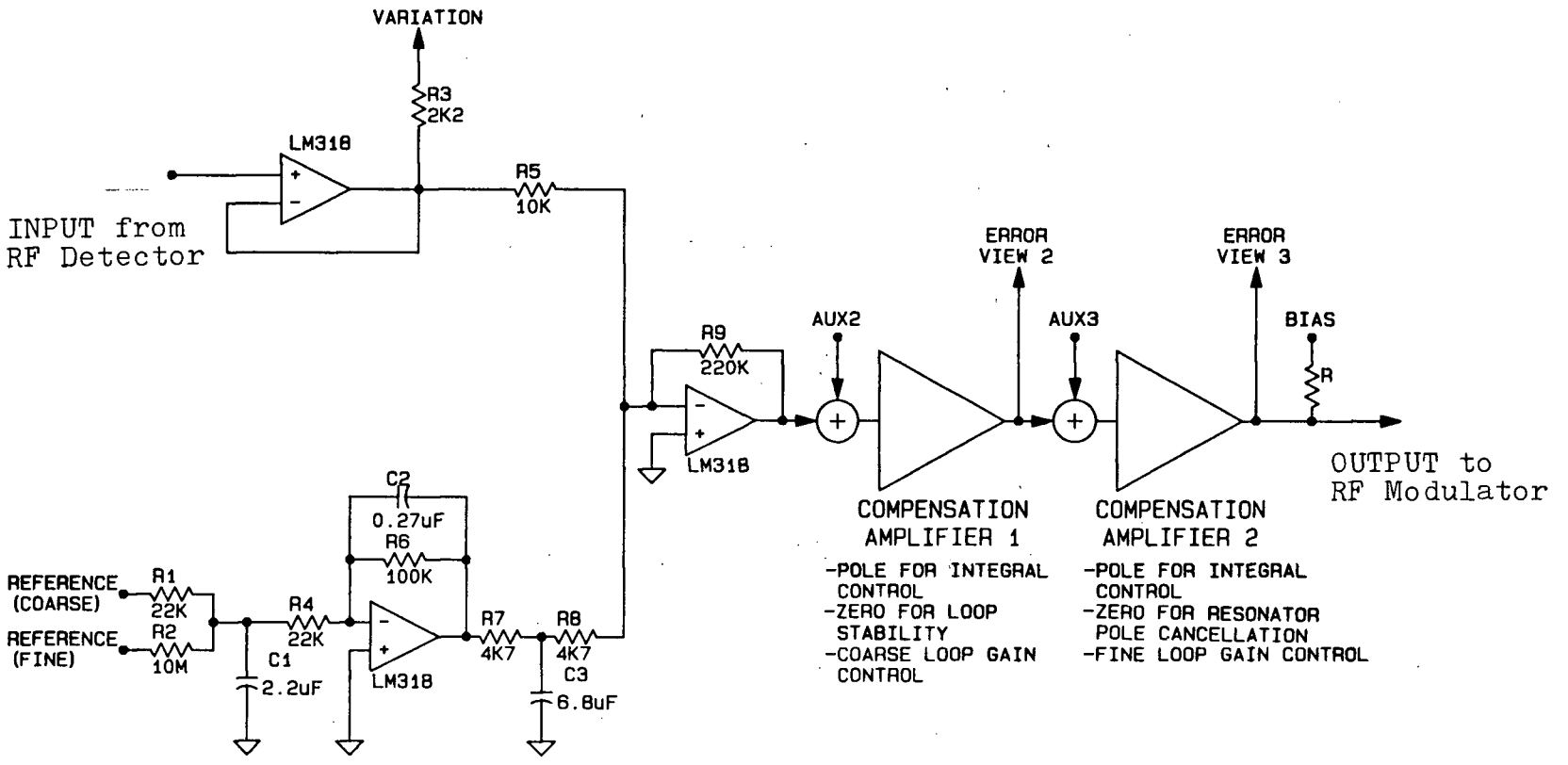

Fig. 4.23 Prototype RF Control System - Error Signal Generation and Compensation

isolation between the RF detector and the analog controller. The buffer passes a replica of the measured signal to the difference amplifier and to external monitoring instruments. Such instruments, e.g. an oscilloscope or a high precision/low drift voltmeter (HP 3468B or equivalent), should have a very high input impedance. R3 (2k2) merely provides some extra protection against the possibility of unexpected loading of the buffer output.

The two reference signals, coarse and fine, are generated by 0 - 5 volt/ 10 bit CAMAC digital to analog converters and are summed by the resistor network consisting of R1 (22k), R2 (10M), and R4(22k). Further processing by an inverting summing amplifier yields a DC transfer function:

$$V_{ref} = 1.06 \times (2.27 \times V_{coarse} + 0.1 \times V_{fine}) \qquad (4.1)$$

The difference or error signal is generated by an inverting summing amplifier. Its transfer function is given by:

$$V_{err} = 22 \times (V_{in} - V_{ref}) \qquad (4.2)$$

Assuming a normal detector scaling of 1 volt per 10 kilovolts for amplitude and 27 millivolts per degree for phase detectors, the scaling for the reference inputs is approximately as follows:

Amplitude	Coarse	118 volts/step
	Fine	.26 volts/step
Phase	Coarse	0.44 degrees/step
	Fine	0.001 degrees per step

Setting the Reference Signals

Setting the reference signals to a desired value may prove somewhat challenging since the sum of the coarse and fine reference signals will not necessarily behave monotonically. The problem is easily resolved, however:

In the case of amplitude control, the detected signal is measured by a high resolution digital voltmeter connected to the variation output. The reference signals will be adjusted until the desired measurement is obtained;

In the case of phase control, the fundamental phase is normally fixed and the third harmonic phase with respect to the fundamental must be made on the basis of beam measurements.

Inspection of the reference signal buffer shows that the reference signal is low pass filtered before being compared to the measured signal. This is done to prevent problems with 60 Hertz interference introduced by either pick-up or imperfect grounding. It also tends to reduce the random noise which Durieu warned "can be quite high from DAC

circuitry" [33]. The filter is of third order with all real poles. A step change in reference input is passed to the output with less than 50 parts per million error after less than 300 milliseconds.

This delay is of little consequence in normal cyclotron operation since the set points are changed so infrequently and a relatively long settling time is quite acceptable. It does mean, however, that one cannot use the reference inputs:

a. to pulse the RF drive on and off during cavity surface conditioning and pulsing through multipactoring;

b. to introduce feed forward compensation for various disturbances.

The delay should also be noted by RF control system programmers - it is quite long compared to delays that would normally be generated by the control program!

The output of the differential amplifier is passed to the input to the first compensation amplifier. The error signal may be monitored through a test point labelled ERRORVIEW_1.

Compensation Amplifiers

The compensation amplifiers implement the compensation scheme designed by Durieu and presented in fig. 4.4. A simplified diagram of the compensation amplifier chain is presented in fig. 4.24 (a). The amplifier chain consists of

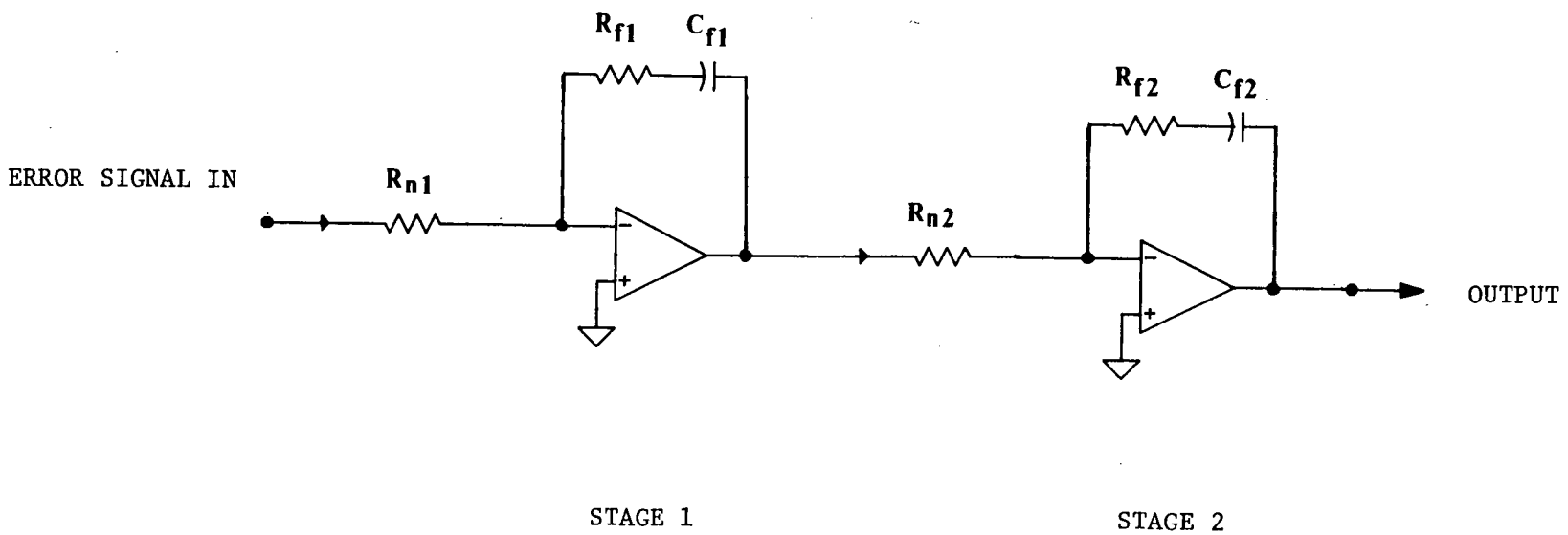

Fig. 4.24(a) Simplified Diagram of Analog Controller - Compensation Amplifiers

two similar stages in cascade. Each stage introduces (a) selectable gain, (b) a pole at the origin, and (c) a zero at a selectable location.

The gain of a single such stage is given by:

$$G(s) = [R_f + 1/sC]/R_n \tag{4.3}$$

$$= (1 + sR_fC)/sR_nC \tag{4.4}$$

$$= K/s\ (1 + s/w_c) \tag{4.5}$$

where:

$$K = 1/R_nC \tag{4.6}$$

$$w_c = 1/R_fC \tag{4.7}$$

The gain for two such stages in cascade is simply given by:

$$G_c(s) = K_c/s^2\ (1 + s/w_{c1})\ (1 + s/w_{c2}) \tag{4.8}$$

where:

$$K_c = (1/R_{n1}C_1)\ (1/R_{n2}C_2) \tag{4.9}$$

$$w_{c1} = 1/(R_{f1}C_1) \tag{4.10}$$

$$w_{c2} = 1/(R_{f2}C_2) \tag{4.11}$$

The compensation amplifiers used in the prototype analog controller are shown in fig. 4.24(b). The gain and response corresponding to a given setting are given in Table VII. Where appropriate, the resistance of the

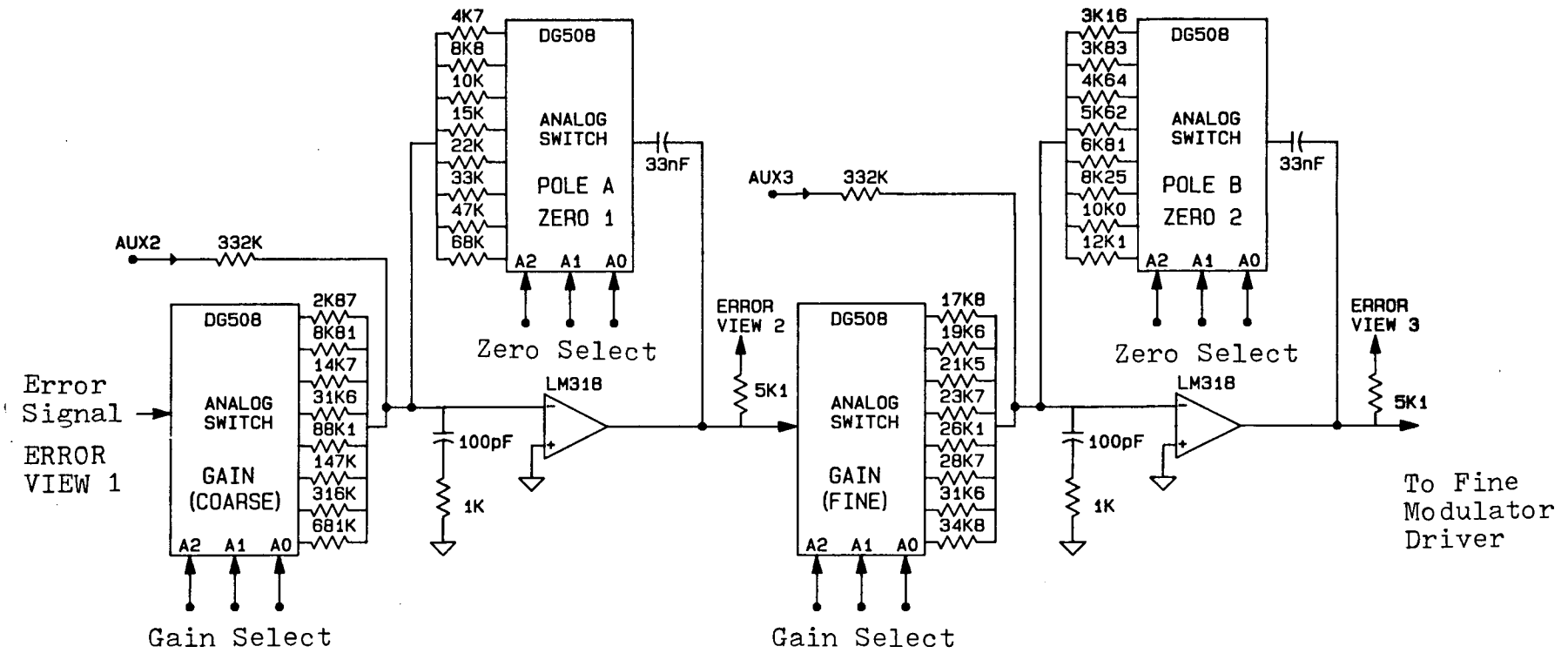

Fig. 4.24(b) Analog Controller - Compensation Amplifiers

TABLE VII

GAIN AND RESPONSE SETTINGS - PROTOTYPE ANALOG COMPENSATION AMPLIFIERS

First Compensation Stage			Stabilizing Zero
Address	Gain Factor	Time Constant (usec)	Zero Frequency (Hz)
0	1.0	226	4425
1	2.16	156	6410
2	4.64	110	9090
3	10.0	74	13510
4	21.6	50.8	19700
5	46.4	34.3	29150
6	100.0	23.7	42190
7	216.0	16.8	59520

Second Compensation Stage			Resonator Pole Cancellation	
Address	Gain Factor	Time Constant (usec)	Q(23.06) MHz	Q(69.18) MHz
0	1.0	85.1	6150	18450
1	1.10	70.7	5110	15340
2	1.21	58.8	4250	12750
3	1.33	49.0	3540	10630
4	1.47	40.1	2960	8870
5	1.62	34.2	2470	7420
6	1.78	28.6	2070	6220
7	1.96	24.1	1740	5230

Note:

The total gain (end to end) at 1 rad/s is programmable from 40.9×10^6 to 16.6×10^9 or, in logarithmic terms, from 152.2 dB to 204.4 dB. This corresponds to a 5 dB interval approximately every six steps.

analog switch was taken into account when selecting feedback and input resistors. Provision is made for observing the error signal at various stages in the compensation network (Error_View 1, 2, 3) and introducing feed-forward compensation (Aux 2, 3).

The desired compensating and stabilizing zeros are chosen by selecting an appropriate feedback resistor. By switching the feedback resistor instead of the capacitor, the gain and zero settings are made independent of each other. Problems associated with transients that would normally accompany the process of switching charged and discharged capacitors in and out of the feedback loop are similarly avoided. The resistor values are chosen so that the time constants of the zeros form a geometric progression with seven intervals.

The first stage gives the coarse gain selection in seven geometric steps. The second stage gives the fine gain selection, also given in seven geometric steps. The voltage gain of the combined compensation stages (at 1 rad/s) may be selected from the range of 40.9×10^6 to approximately 1.66×10^{10} in 63 geometric steps.

The gain and response of the compensation amplifiers can be set either by the local control processor or by shorting the appropriate pins of a connector mounted on the front panel of each of the four compensation amplifier modules.

4.4 THE RF DETECTION SUB-SYSTEM

In its most basic form, the RF detection system is designed to present the following low frequency / low level signals to the RF control system:

DC voltages proportional to the difference between the fundamental and third harmonic resonant frequencies of the cyclotron RF cavity and the frequencies of the fundamental and third harmonic driving signals;

DC voltages proportional to the relative amplitude and phase of the fundamental (23 MHz) and third harmonic (69 MHz) components of the accelerating voltage; and,

Digital status bits to indicate if the accelerating voltage exceeds a preset threshold, perhaps 5 kV, and if a spark or multipactor discharge has been detected and the RF drive signal has been automatically disabled.

In principle, if the accelerating voltage amplitude and phase feedback control loops have sufficient gain and bandwidth, the radio frequency control system should be able to suppress virtually all disturbances to the cyclotron's accelerating voltage and easily meet the amplitude and phase stability requirements for acceleration in separated turns and single turn extraction. In practice, however, the ability of the radio frequency control system to regulate the amplitude and phase of the accelerating voltage, hence the energy gained by the ion beam during each turn, is limited by the maximum control loop gain and bandwidth that are allowed by stability considerations, as mentioned in

section 4.1, and errors and instabilities in the output of the radio frequency amplitude and phase detectors, as discussed in this section.

Simply stated, the RF control system can only regulate a given variable as well as it can measure it. To the feedback control loops, errors and instabilities introduced by the radio frequency detectors are indistinguishable from errors and instabilities in the controlled variable, i.e. the amplitude or phase of the accelerating voltage. This means that in the process of suppressing real disturbances such as the effects of fluctuations in the resonant frequency of the cavity, the gain of the power amplifiers, or the degree of beam loading, the feedback control loops can actually introduce spurious disturbances into the accelerating voltage. The RF detectors are, therefore, critical components of the RF control system.

4.4.1 Measurement of the Accelerating Field by Its Effect on the Ion Beam

As mentioned in chapter two, it is very difficult to measure the **exact** value of the RF voltage encountered by the ion beam during acceleration. The best measures of the stability and form of the accelerating voltage are, by definition, the mean energy gain per turn and the energy dispersion within the beam but in practice it is very difficult to measure these quantities so other less precise (but more convenient) measures such as a capacitive voltage dividers mounted near the dee gap are usually employed.

One measure of the stability of the accelerating voltage is the stability of the radial position of a given turn, as suggested by fig. 2.6. A slight increase in the accelerating voltage will cause the turn positions to shift towards the outside of the cyclotron while a slight decrease will cause the position to shift inwards. One can obtain an error signal for accelerating voltage regulation by using an intercepting slit as a differential current probe. When a turn is centered in the slit, the current in each of the tails intercepted by the slits is equal. Small fluctuations in the accelerating voltage, hence radial position of the beam, will cause one current to increase at the expense of the other. The difference between the two currents has been shown [15] to be a good measure of these fluctuations.

When the cyclotron was being designed and commissioned, Richardson and Craddock [34] and Erdman [35] expressed interest in measuring the radial position of the ion beam for fine control of the accelerating voltage amplitude. It may prove necessary to incorporate such beam-related information into the new accelerating voltage amplitude regulation loops to achieve the stability required to accelerate the beam in separated turns at the extraction radius. Although the development of instrumentation for measuring such parameters would be involved and time consuming, recent work by von Rossen, Euler, and Hinterberger [15] which was specifically oriented towards

physically large cyclotrons such as TRIUMF has yielded encouraging results.

It was hoped to investigate the use of differential current slits for accelerating voltage regulation using the existing slits H1, H2, H3, and H4 as part of this design study. These slits are not perfectly configured but would have been useful for first tests using existing hardware in the cyclotron vacuum tank. Unfortunately, problems with RF pick-up encountered early in the development of the slits (circa 1974) led to the decision to simply short them to ground inside the vacuum tank rather than pass the intercepted current signals through a coaxial cable to the service annex as was originally planned. Similar problems would undoubtedly be encountered during an attempt to implement a differential current slit specifically designed to generate an error signal for accelerating voltage regulation. Once the probes are installed in the vacuum tank they are relatively inaccessible and must therefore be very reliable. Unfortunately, the vacuum tank environment is also extremely harsh - the probes are exposed to high voltages, hard vacuum, radiation, and sparking. Materials used in the probes construction must be carefully chosen to prevent both probe failure or contamination of the tank vacuum due to outgassing. These problems are compounded by radio frequency interference from the main RF system which contaminates the desired error signal.

No attempt was made to incorporate measurements of beam

properties into the existing RF control system and no specific plans to incorporate such measurements into the new control system have yet been made. although some interest in such techniques has been expressed in the past. Dohan [36] has expressed reservations concerning the ultimate effectiveness of differential current regulation at TRIUMF. In any event, the priority of such work is now quite low.

4.4.2 Organization and Topology of the New RF Detection Sub-System

The radio frequency detectors present a measure of the variables to be controlled or regulated to the appropriate control loops. The sub-system consists of (a) the set of capacitive dividers used to sample the dee voltage, hence a good estimate of the accelerating voltage and (b) the two pairs of inductive loops used to sample the transmission line and cavity surface currents so that their phase difference can be measured and the difference between the cavity's resonant frequency and the driving frequency determined. An equivalent circuit of the RF detectors is shown in fig. 4.25.

A number of factors limit the accuracy of the RF detectors, particularly the measurement of the accelerating voltage, as suggested by figs. 4.26 and 4.27 and must be considered during the design and development of the detector subsystem:

The effects of mechanical vibration or displacement of the dee on the relationship between (i) the accelerating

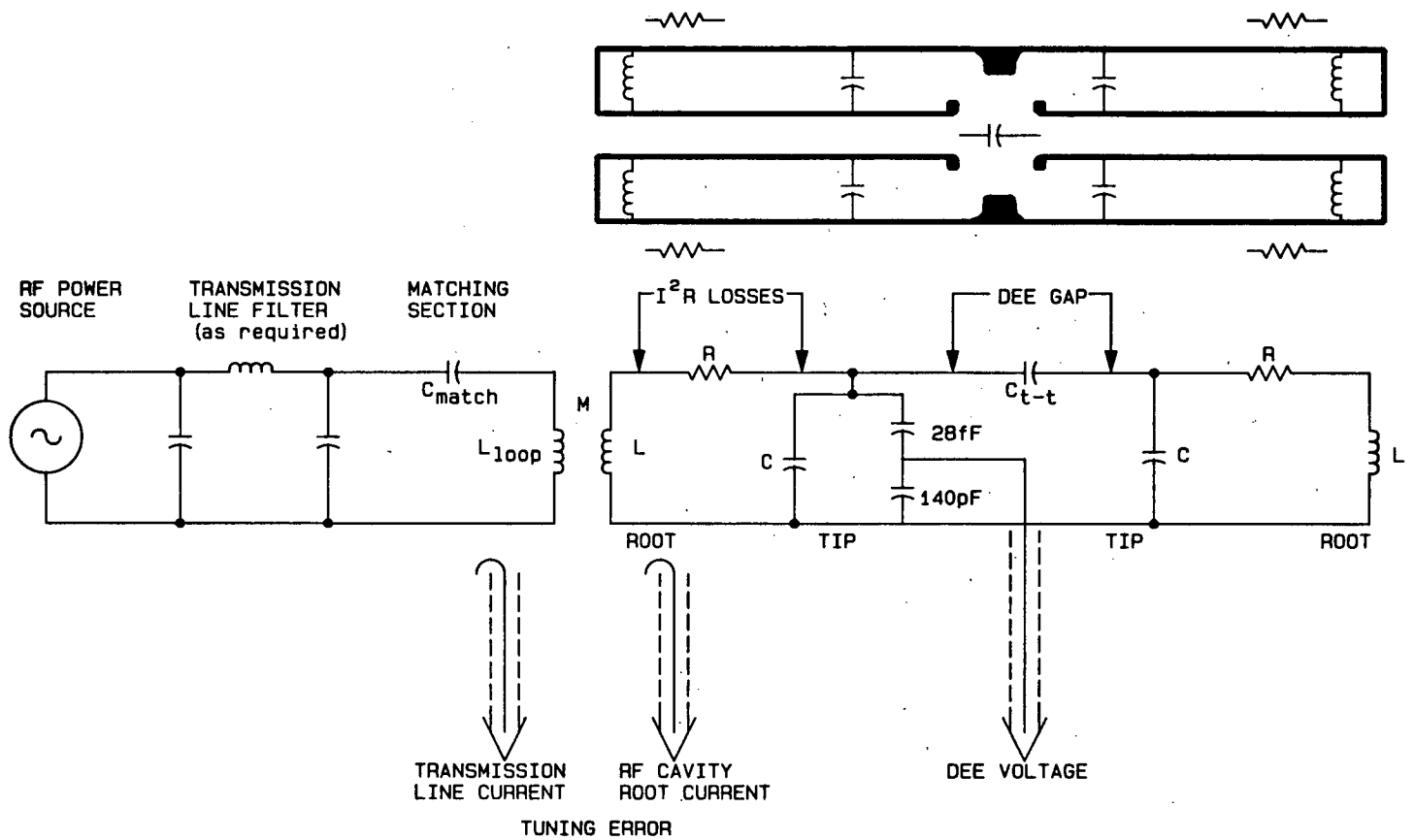

Fig. 4.25 Equivalent Circuit - RF Tuning Error and Accelerating Voltage Detection

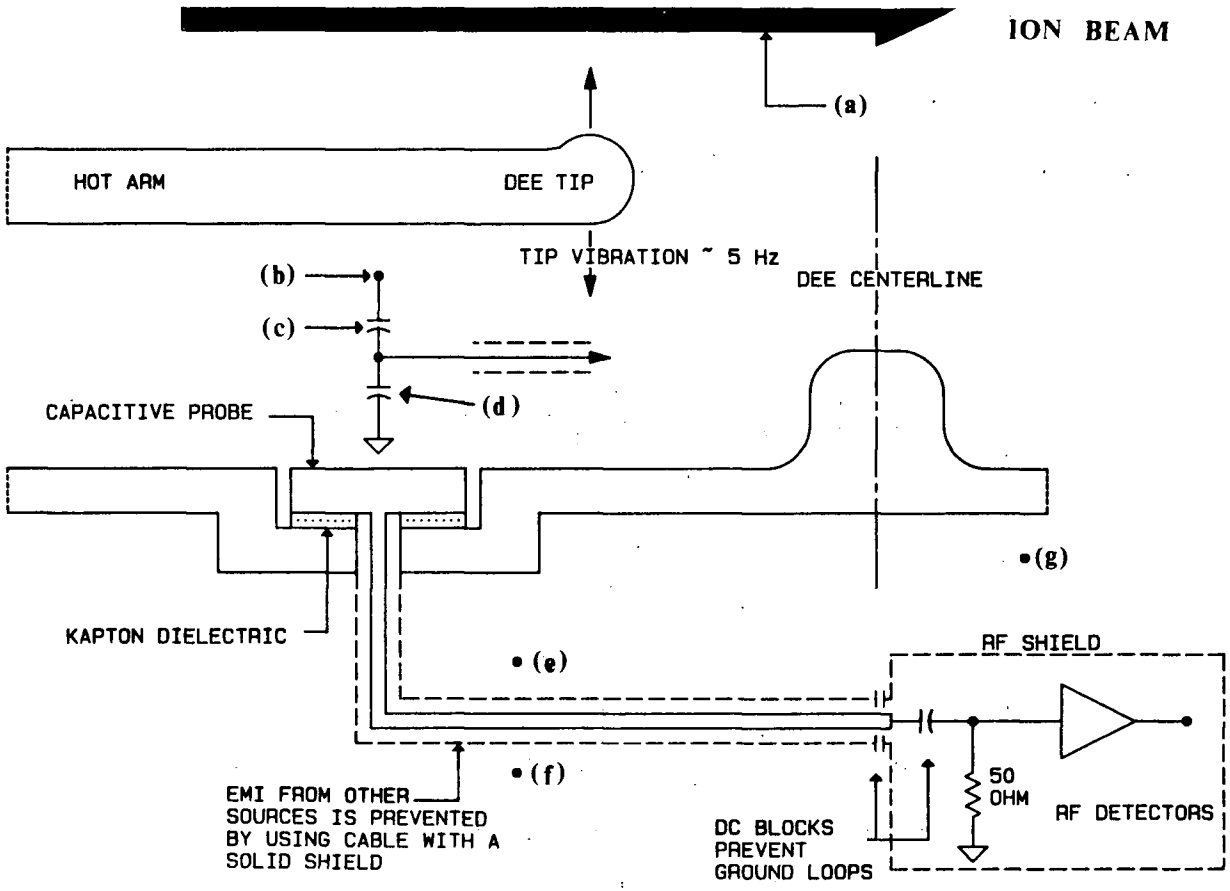

Fig. 4.26 Sources of Error in Measurement of the Accelerating Voltage

DEE GEOMETRY DEPENDENT ERRORS

variations in the relationship between:

(a) V_{acc} and V_{dee} at a given radius

(b) V_{acc} at different radii

(c) C_{tip} and C_{probe}

TEMPERATURE DEPENDENT ERRORS

(d) variations in probe capacitance (fig. 4.27)

(e) variations in cable attenuation

(f) variations in cable insertion phase

(g) variations in detector transfer function

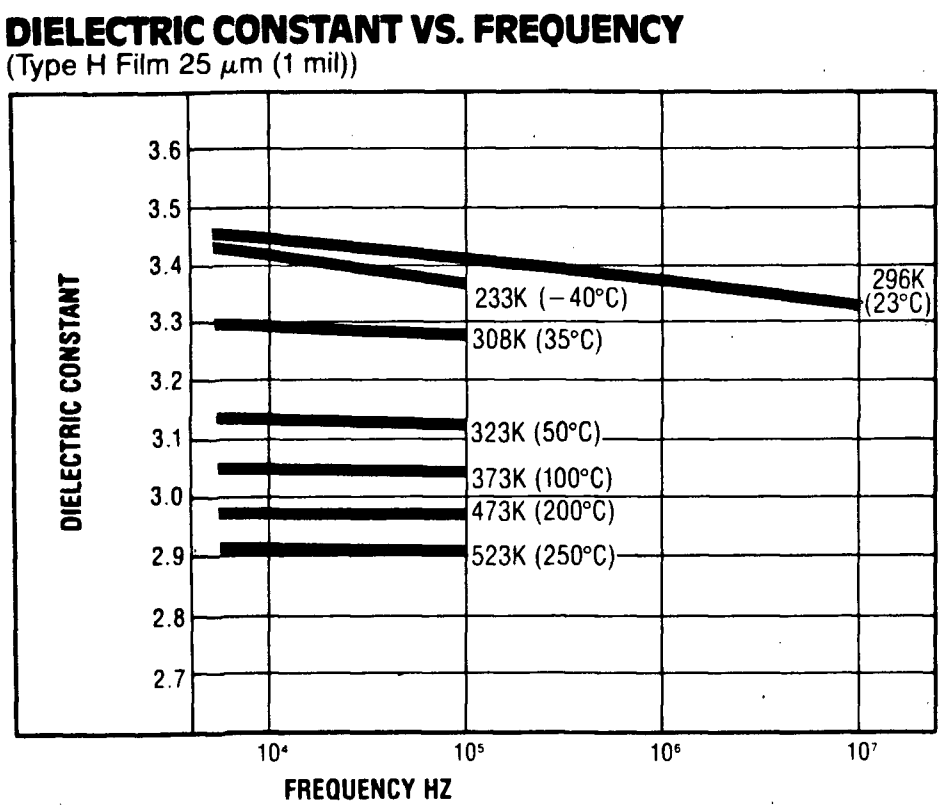

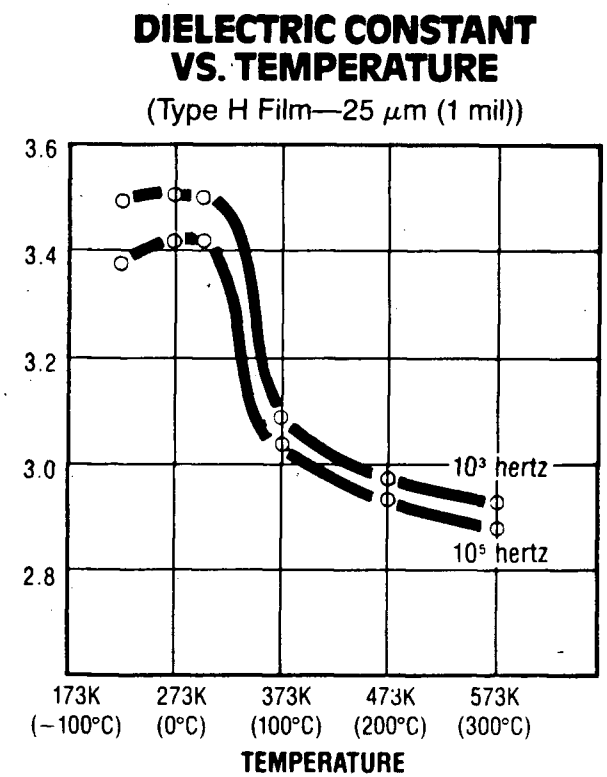

Fig. 4.27 Variation of the Dielectric Constant of Kapton Polyimide Film with Frequency and Temperature

voltage and dee voltage at a given radius, (ii) the accelerating voltages at different radii, and (iii) the ratio between the tip capacitance and the probe capacitance, hence the output of the dee voltage probe;

The effects of variations in the temperature of the RF cavity on the dielectric constant of the Kapton insulator (see fig. 4.26) hence the capacitance of the dee voltage probe;

The effects of variations in the temperature of the coaxial cable leading from the probe to the RF detectors on the attenuation and electric length (insertion phase) of the cable;

The effects of variations in the temperature of the RF detectors on their transfer characteristics; and,

The need to design RF filters to separate the fundamental and third harmonic components of the dee voltage and cavity root current so they may be measured separately.

As discussed in Appendix B, reduction of the amplitude of the 5 Hz mechanical vibrations of the dee by at least an order of magnitude is a major design objective of the RF Resonator Replacement Program. Inspection of fig. 2.1 shows that the dee gap is formed by four mechanically independent sets of hot arms. Considering that the hot arms on either side of the centre post are also mechanically isolated from one another, one is left to compensate for the effects of eight uncorrelated mechanical vibrations on the accelerating voltage. Although it has been found that significantly

better regulation can be achieved by summing the output of two RF detectors sampling the dee voltage on diagonally opposing octants (e.g. Upper Quadrant 1 and Lower Quadrant 3) than by using the output of a single detector sampling at a given single point, significant 5 Hertz perturbations in the dee voltage remain, as shown in fig. 4.28. A low frequency spectrum analyzer (Nicolet Model 660B) was used to compare the perturbation spectra of the accelerating voltage variation seen by a given dee voltage probe and the accelerating voltage variation inferred from measurements of the ion beam's time-of-flight. Despite the high gain of the accelerating voltage control loop at such low frequencies, the disturbance at 5 Hz is significant which suggests that the 5 Hz vibration is corrupting the measurement through the mechanisms discussed earlier (fig. 4.26).

A description of the development of a new dee voltage probe to replace the design commissioned with the cyclotron was presented by Hohbach [37]. The principal difference between it and the design described by Brackhaus [4] is the use of Kapton polyimide film [38] as the capacitor's dielectric. From a mechanical standpoint, Kapton is clearly an excellent choice since it is highly resistant to extremes of temperature, hard vacuum, and radiation. Unfortunately, its dielectric constant (see fig. 4.27) has a rather large negative temperature coefficient over the range of temperatures usually present in the cyclotron. Calculations have suggested that the variation may be sufficiently large

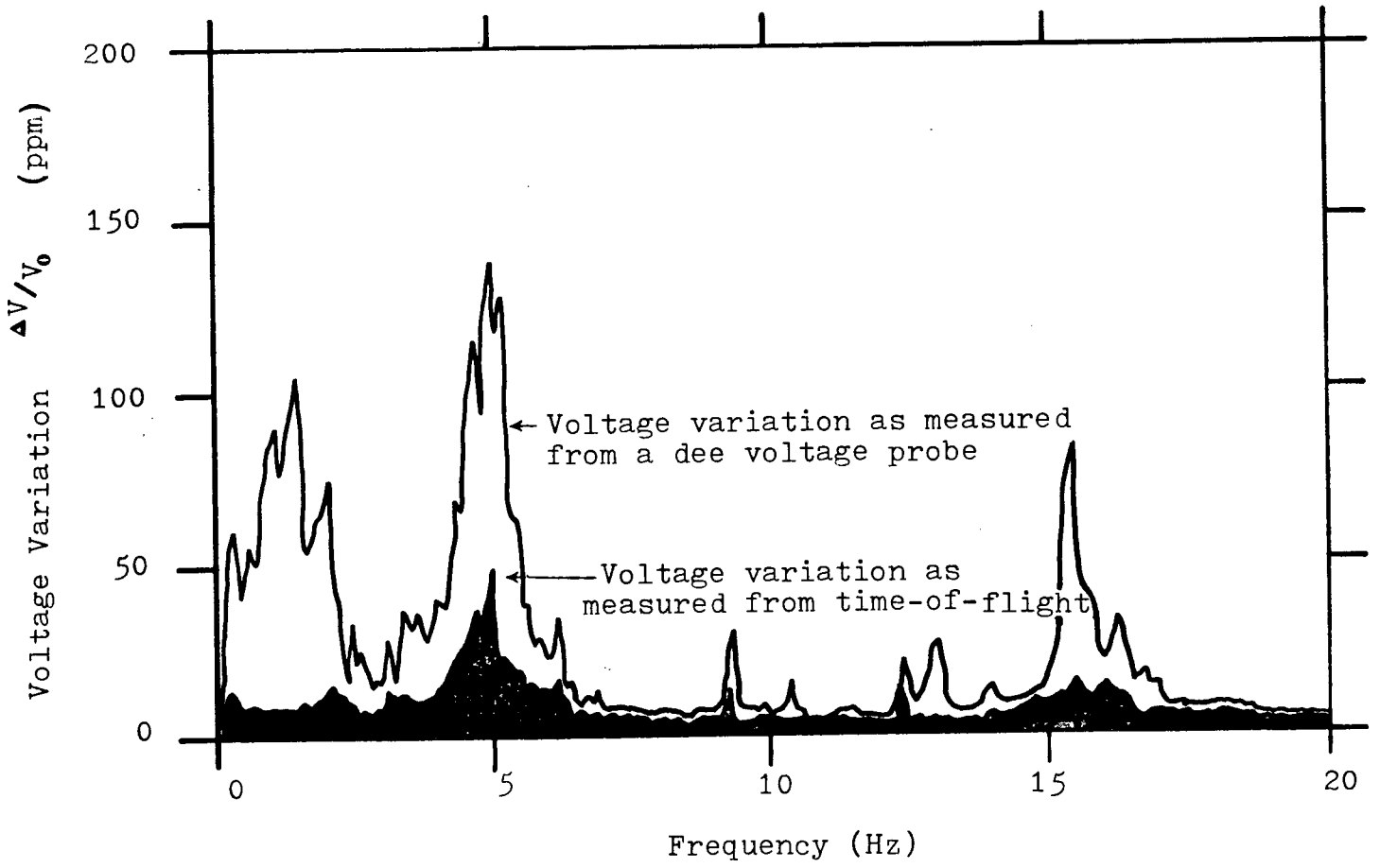

Fig. 4.28 Comparison of Time-of-Flight and Dee Voltage Perturbation Spectra

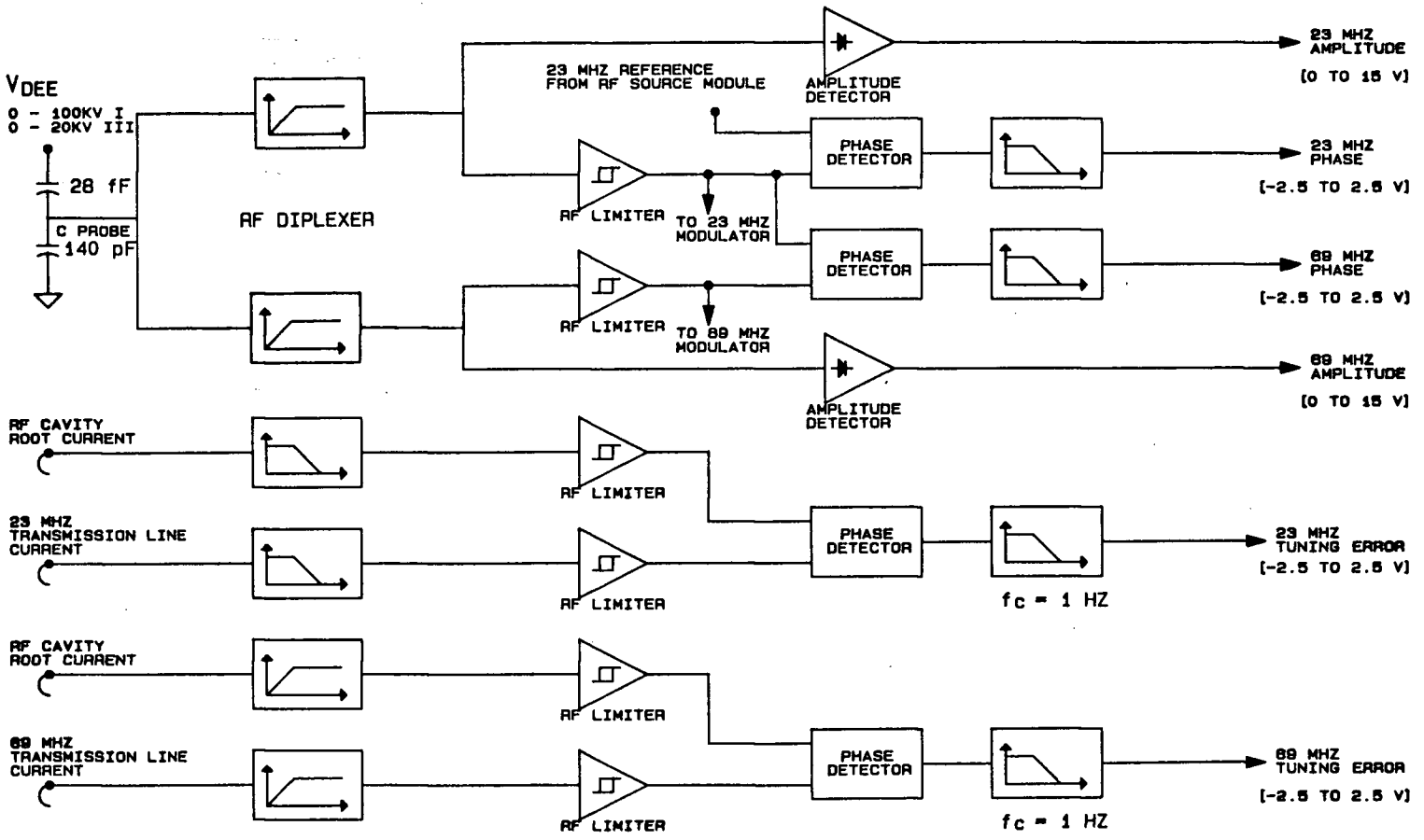

Fig. 4.29 New RF Control System - RF Detection System

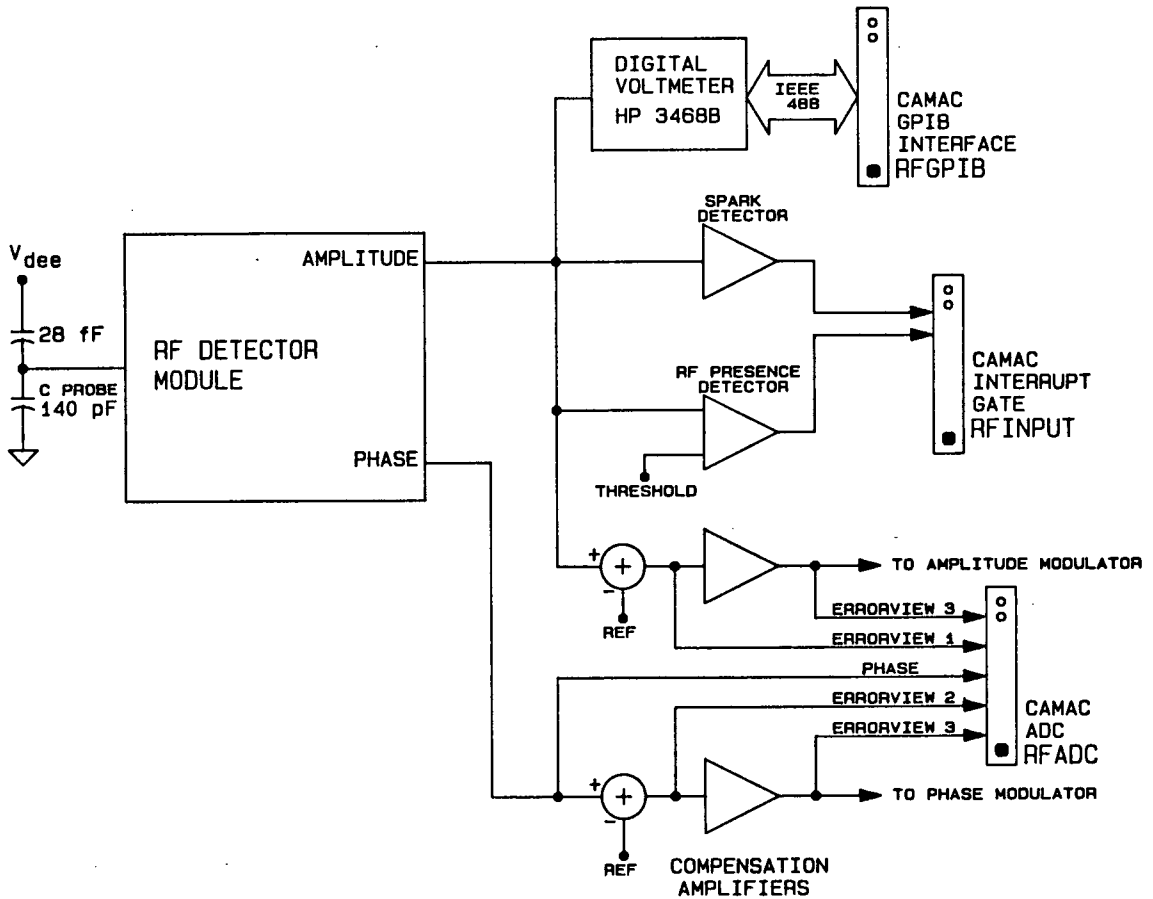

Fig. 4.30 RF Detector / RF Control System Interface

to compromise the required stability of the measurement chain.

Alternative voltage measurement schemes have been developed at other institutions which may be of some use in RF system development and perhaps during actual RF system operation at TRIUMF should the signal from the capacitive dee voltage prove inadequate during high energy resolution modes of operation. Measurement of the accelerating voltage by its effect on the ion beam was discussed in section 4.4.1. A related scheme is based on measurement of the X-ray spectrum generated by electrons liberated by ionization of residual gas in the dee gap region or emitted by a strategically placed filament and subsequently accelerated into the opposite dee by the accelerating field. Measurement of the end-point of the X-ray spectrum gives the maximum potential encountered by the free electrons. The scheme is briefly discussed in section D.6. A third technique which has been described by Massey et al [39] [41] [42] is based on the measurement of the effect of the accelerating field on linear electrooptic materials using a laser. The scheme was originally developed for remote measurement of 60-Hz voltages, currents, and transients in a power line substation environment by power utilities. Wyss [40] recently reviewed the use of the technique at radio and microwave frequencies for the measurement of antenna radiation patterns. The advantages (and disadvantages) of the scheme are described in the references.

The organization of the new RF detection system is shown in figs. 4.29 and 4.30. Each detection circuit consists of four principal components:

a. the capacitive or inductive RF cavity probes;

b. the transmission line leading from the RF cavity to the RF control system, which, in the case of TRIUMF, has considerable length (over 200 feet);

c. an RF filter or diplexer to separate the fundamental and third harmonic components;

d. an RF amplitude or phase detector to convert the RF signal to the DC signal that will be monitored by a voltmeter (or analog to digital converter) or applied to a summing amplifier to generate the control loop error signal, as shown in fig. 4.30.

4.4.3 RF Filters

The voltages developed across the loops and probes in the radio frequency cavity and associated transmission lines are composite signals with both fundamental and third harmonic components. The signals must be filtered and the unwanted component removed before they are passed to the appropriate RF amplitude and phase detectors.

Techniques for designing and constructing RF filters for such purposes are well known and have been described in many references including Matthaei and Cristal [43], Malherbe [44], Williams [45], Christian [46], and DeMaw [47] [48]. Although it is expected that the root and loop current signal filters will use standard low pass and high

pass LC filters, the signals from the dee voltage probe will be passed through a diplexer [43] so that both components of the accelerating voltage are sampled at the same voltage probe. Prototype filters were assembled for development work but design and construction of the final versions will await completion of RF amplitude and phase detector development.

Ground loops and various forms of electromagnetic interference which may contaminate the dee voltage signal are an especially serious consideration at a facility with many high power circuits in the vicinity of the signal paths, such as TRIUMF. Electrical design considerations which are useful in controlling such interference have been described by Sigg [6], Mack [49], and White [50].

4.4.5 The RF Amplitude Detector

The RF amplitude detector produces a DC voltage that is proportional to the amplitude of the accelerating voltage. It usually consists of a precision rectifier (or peak detector, depending on the design) followed by a low pass filter. Although a linear transfer function is certainly desirable, it is not necessary since the basic concern is stability, not absolute accuracy. The major concern in the design of the amplitude detector is the effect of temperature fluctuations on its transfer function which are primarily due to the temperature dependence of the v-i characteristics of semiconductor diodes [51]. A precision rectifier can be assembled by placing the diode in the

feedback loop of an operational amplifier. The threshold voltage is divided by the open loop gain of the amplifier and is thus virtually eliminated [52] [53] [54]. Until recently, however, this technique could only be used at low frequencies (less than 100 kHz) and could not be applied to RF detectors. Gummer (in the existing control system) and Durieu (in the new control system) were forced to use voltage doubling peak detectors with complex feedback circuits. The threshold voltage was eliminated by using an op amp based feedback circuit to force nearly the same current to flow through the rectifying diodes and two reference diodes. The output of the voltage doubler was raised by an amount nearly equal to the voltage drop across the reference diodes. Unfortunately, although this circuit (shown in fig. 4.31) linearizes the detector's transfer function, it does not provide temperature compensation.

DeAgro [55] recently described an op amp based precision rectifier which could detect signals in a linear region over a 60 dB dynamic range for roughly 11 kHz bandwidth signals of carrier frequencies ranging from 1 MHz to 4 MHz when using a simple RC succession filter. DeAgro belives that **"much higher carrier frequencies (up to 200 MHz) could be achieved when using state of the art type op-amps."** Such op amps have been described by Evans [56]. They employ an unusual (and patented) circuit configuration to eliminate the gain bandwidth product and permit their use at RF frequencies in excess of 100 MHz.

Spark Detection

The existing control system relies on level detectors to detect the loss of resonator voltage associated with a spark or the onset of multipactoring. A new spark detector has been designed that senses the rate of resonator voltage decrease. Under normal conditions, the rate of resonator voltage decrease or increase in response to a step function is limited by the energy stored in the cavity. The pole in the response is set by the cavity's quality factor. The discharge associated with a spark or multipactor spoils the Q of the cavity and the dee voltage will decay with a much faster time constant.

The prototype spark detector is shown in fig. 4.32. The spark is detected by C1 in parallel with R2 and R3. The properties of the parallel RC circuit are described by Clement and Johnson [57]. In summary, this circuit presents an infinite impedance to a voltage decaying with the same time constant. A positive voltage that decays faster than the set time constant will induce a negative voltage on R1. This will trip the comparator and set the data flip flop. The flip flop can be read, set, or reset through the CAMAC dual output register and dual interrupt gate as shown in fig. 4.10 and fig. 4.32. In practice, the time constant of the spark detector will be set about 10 to 15 percent lower than the expected cavity time constant to prevent accidental triggering.

A related measurement can be used to measure the

quality factor of the RF cavity while the RF system is in pulsed mode. This value is required in order to correctly set the resonator pole cancellation zero. The quality factor Q is measured on the falling edge of the pulse by observing the time interval T required for the dee voltage to fall from a given voltage V1 to a smaller voltage V2. If the measurement is performed under vacuum, both voltages must be above the multipactoring threshold.

$$V2 = V1 \exp -(\omega T/2Q) \tag{4.12}$$

$$\ln (V2/V1) = -(\omega T/2Q) \tag{4.13}$$

$$Q = \omega T / [2 \ln (V1/V2)] \tag{4.14}$$

4.4.5 RF Phase Detectors

RF phase detectors in common use fall into three categories: double balanced mixers [58] [59] [61], digital phase detectors [58] [60] [61] [62], and discriminators [58] [63]. Several phase detectors were tested as part of this design study but none were evaluated in detail.

In summary, double balanced mixers are perhaps the least expensive and easiest to use but often suffer from a temperature dependent voltage offset. Their output is a function of both the amplitude and the phase of the two input signals. Although they are probably acceptable for use in the cavity tuning controller, it is doubtful that they would be acceptable in the third harmonic phase regulation loop.

Digital phase detectors based on exclusive or gates and other configurations are increasingly popular in many applications since they have a linear rather than sinusoidal transfer characteristic. The output amplitude of digital phase detectors is independent of the amplitude of the input signal although digital phase detectors are very sensitive to the duty factor of the input signals. Unfortunately, digital phase detectors tend to be noisier than their analog counterparts. Phase regulation in the SIN third harmonic RF system is based on a discriminator phase detector [21] of the type described by Pedersen [63].

Prototype RF phase detectors shown in fig. 4.33 and the RF limiter shown in fig. 4.34 were assembled and shown to be function properly but they were not evaluated in detail. The prime function of the RF limiter (fig. 4.34) is to ensure that the signal input to the digital phase detector has a constant amplitude and a 50% duty cycle.

The transfer functions of the phase detectors were measured by creating a slight difference between the frequencies of the two input signals which, by definition, corresponds to a constant rate of change in the relative phase between the two signals. The transfer characteristics of the prototototype digital phase detectors shown in fig. 4.35 were measured in such a manner. Although the transfer characteristic at 23 MHz is quite linear, the transfer characteristic at 69 MHz is not, for as yet unknown reasons.

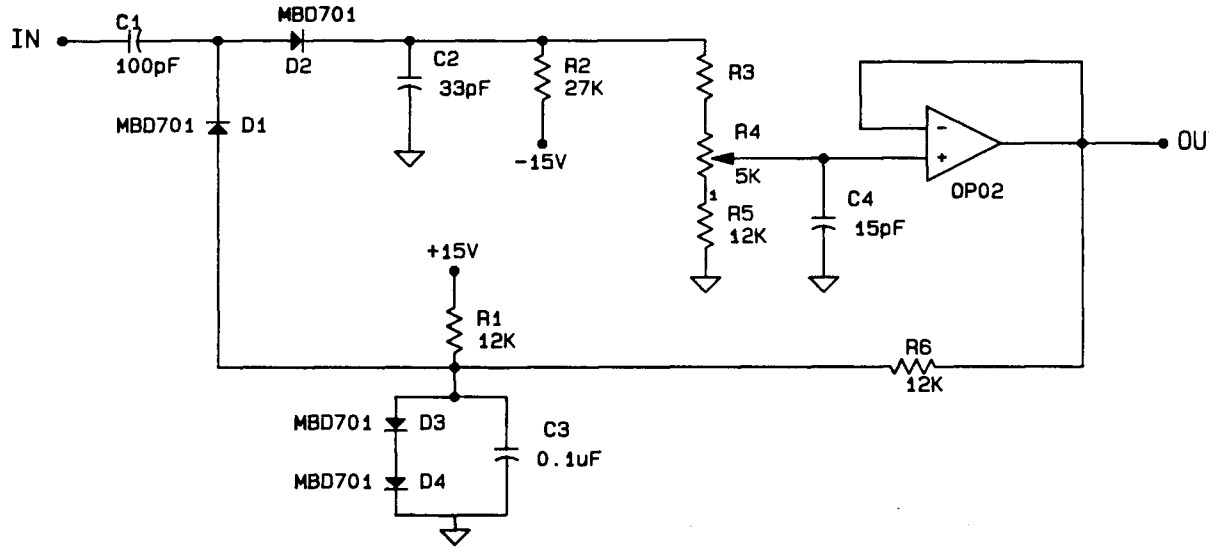

Fig. 4.31 Prototype RF Control System - RF Amplitude Detector

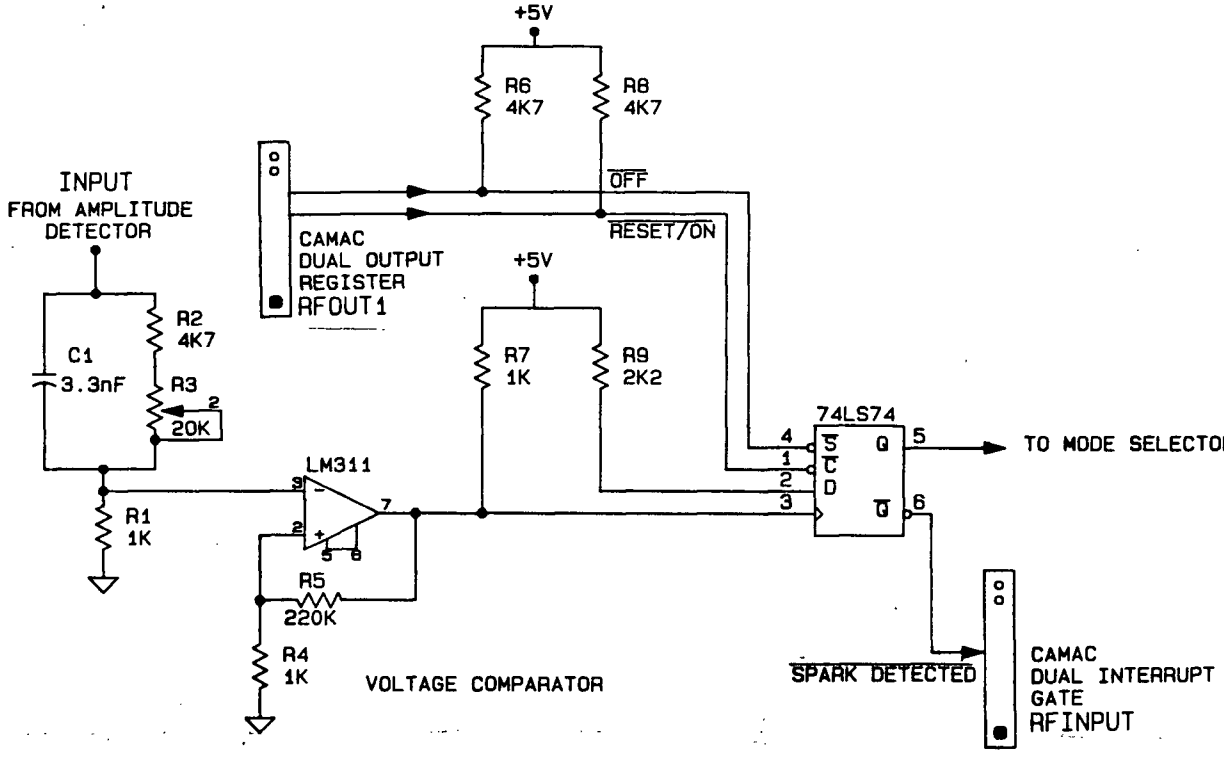

Fig. 4.32 Prototype RF Control System - Spark Detector

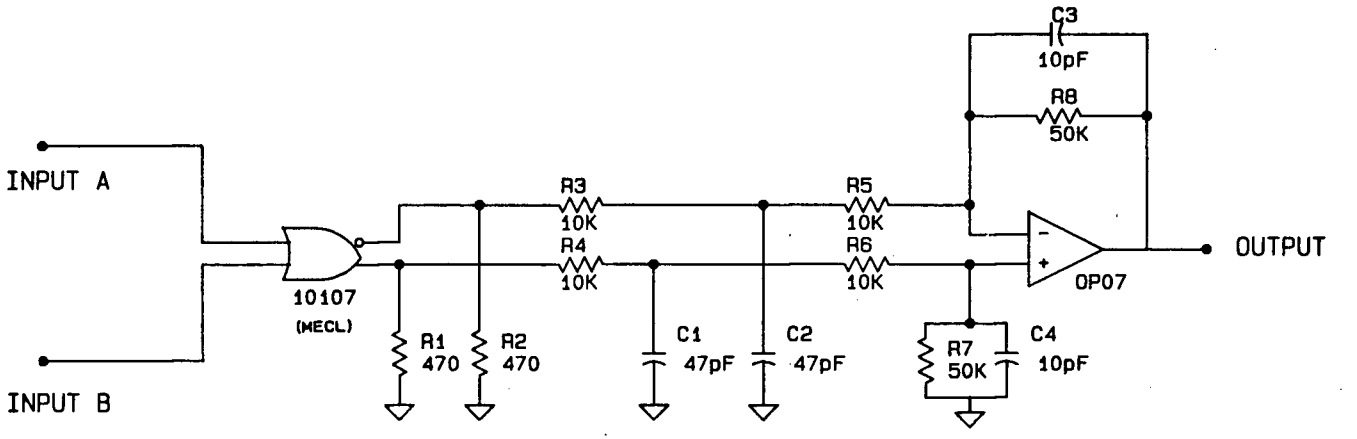

(a)

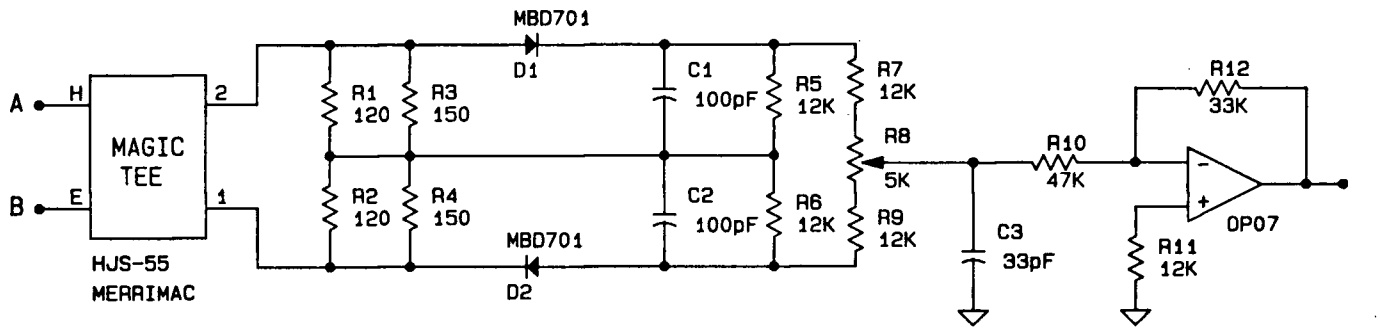

(b)

Fig. 4.33 Prototype RF Control System - RF Phase Detectors
(a) XOR digital phase detector
(b) discriminator-type analog phase detector

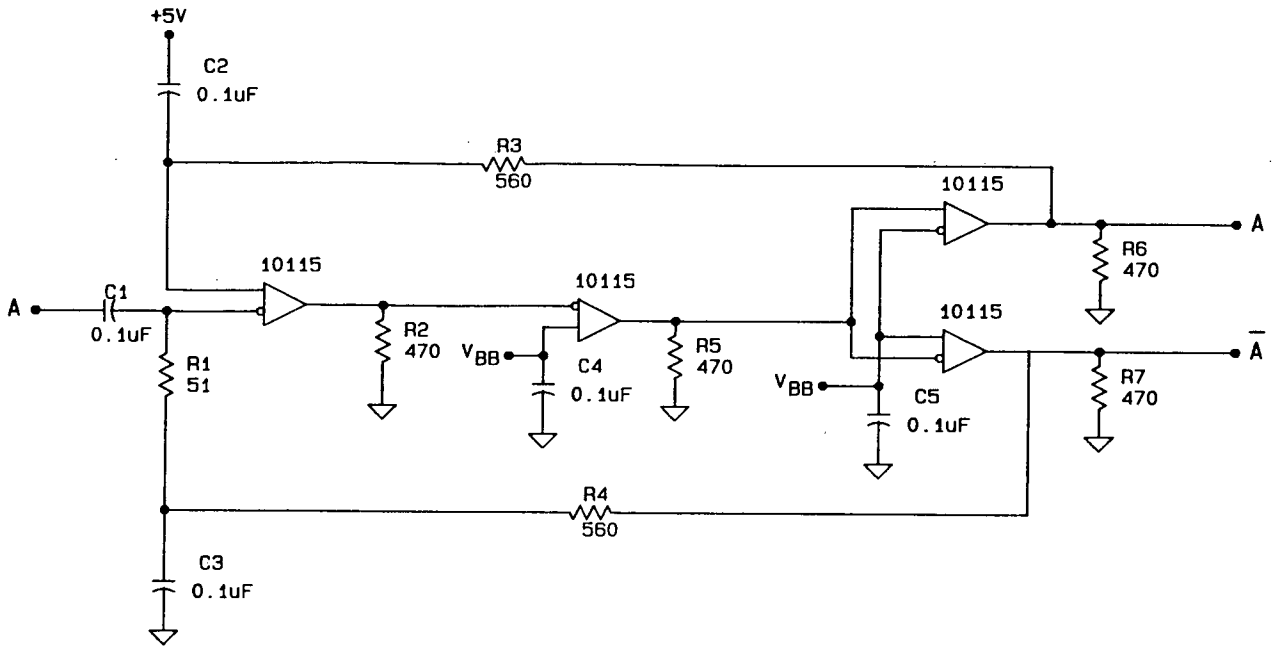

Fig. 4.34 RF Limiter based on ECL Quad Line Receiver

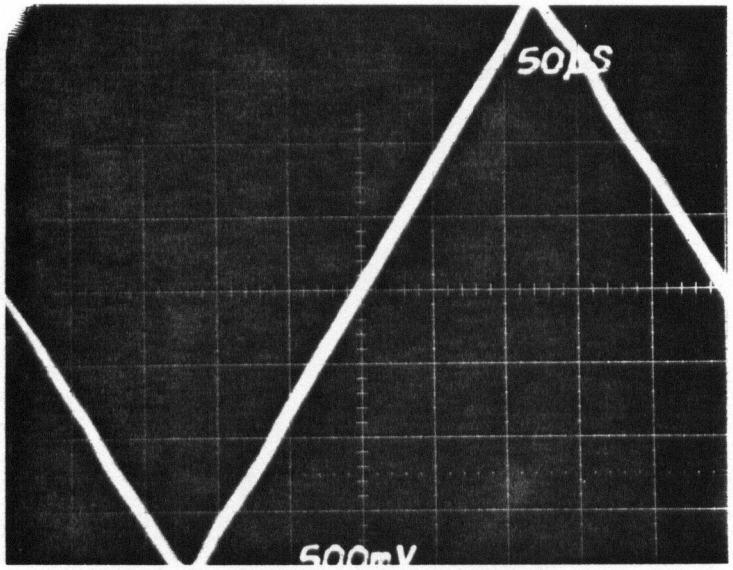

Vertical
500 mV/div

Horizontal
50 usec/div

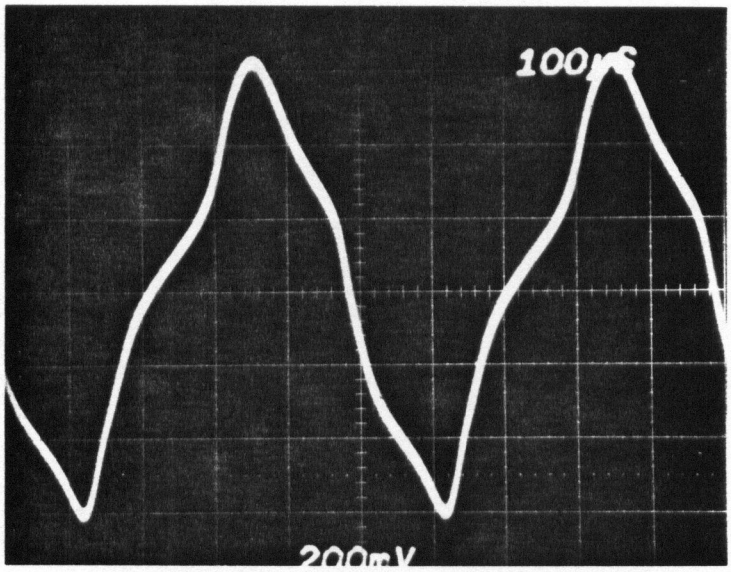

Vertical
200 mV/div

Horizontal
100 usec/div

Fig. 4.35 Transfer Characteristics - Prototype Digital RF Phase Detectors

(a) RF frequency = 23.23076 MHz V_{in} = 1.5 V (peak)

(b) RF frequency = 69.69030 MHz V_{in} = 0.6 V (peak)

$f_{input1} - f_{input2} = 1980$ Hz

4.5 DEVELOPMENT OF THE FINAL RF CONTROL SYSTEM DESIGN

The purpose of the prototype RF control system was to demonstrate safe operation of the test facility RF system with a flat-topped accelerating voltage and provide a vehicle for evaluating control system design alternatives. The preliminary design objectives were met and operational experience with the first prototype suggested many improvements and enhancements to the reference design which should be incorporated into the final design.

RF System Control Panel

Durieu suggested that the status of the RF control system be presented on a software-driven video display terminal and thus eliminate the need for a hard-wired front panel. Such a scheme is used in the TRIUMF central control system. Cyclotron operators gain access to various data and set points by switching between a large number of display screens. Experience with a simplified version of the proposed RF console designed by D. Michelson and B. Evans and implemented using an Intel 8085-based TRIMAC suggested that such a scheme is impractical, particularly during RF system development. The amount of information that can be displayed on a single 80 column by 25 line screen is surprisingly small and the time and effort required to switch between screens while controlling a real time task is rather uncomfortable for the system operator. This problem will be solved by off loading most of the display requirements to a hardware mimic panel which will display

(under local control processor control):

a. the selected operating mode, e.g. driven/self-excited, pulsed RF drive/continuous RF drive;

b. the status of the RF system, e.g. dee voltage amplitude(s) and relative phase(s), magnitude of cavity tuning error, RF on, RF enabled, RF disabled or spark detected; and,

c. controller settings, e.g. selected gain and response of compensation amplifiers, feedback control loop reference values.

This will simplify the design of the video display screen considerably and, most importantly, will eliminate the need for the system operator to rapidly switch back and forth between display screens during execution of a given task. For similar reasons, it has been decided to allow operators to vary set points using a rotary encoder or "soft knob" rather than through the video display terminal keyboard. A soft knob is essentially a digital version of a potentiometer which can be more easily interfaced to a microcomputer than a potentiometer could.

Hardware Issues

The prototype control system was built in a half-height Eurocard chassis which proved to be rather confining. It is suggested that the final design specify full-height Eurocards or Nuclear Instrumentation Modules (NIM's) instead. This would ease the problem of redesigning or adding more functionality to individual modules in the

future. The applications literature [28] [64] [65] [66] [67] provided much useful information regarding component selection and design of circuit layouts.

The layout of the interconnections between modules in the prototype RF control system is suggested by the block diagram in fig. 4.36. The power supply bus and low frequency/high level signals passed between modules are carried on the signal processing crate's backplane. All modules interface with the local control processor through the analog controller module. The digital input/output connectors are standard miniature D connectors. Analog signals are input/output through two pin LEMO connectors. Both sets of connectors are mounted on the rear panel of the crate. RF input/output is performed through single pin LEMO connectors mounted on the front panel of the modules. RF signals are passed between modules through coaxial patch cables. This arrangement has proven to be extremely satisfactory although the analog controllers and associated interfaces are somewhat cramped when mounted on just one single-height Eurocard. Single pin LEMO connectors were chosen over SMA connectors because they connect and disconnect with much greater ease but problems with poor connections have suggested that SMA connectors would have been a much better choice.

The pulse width modulator used to pulse the RF drive during system start-up should be implemented in hardware

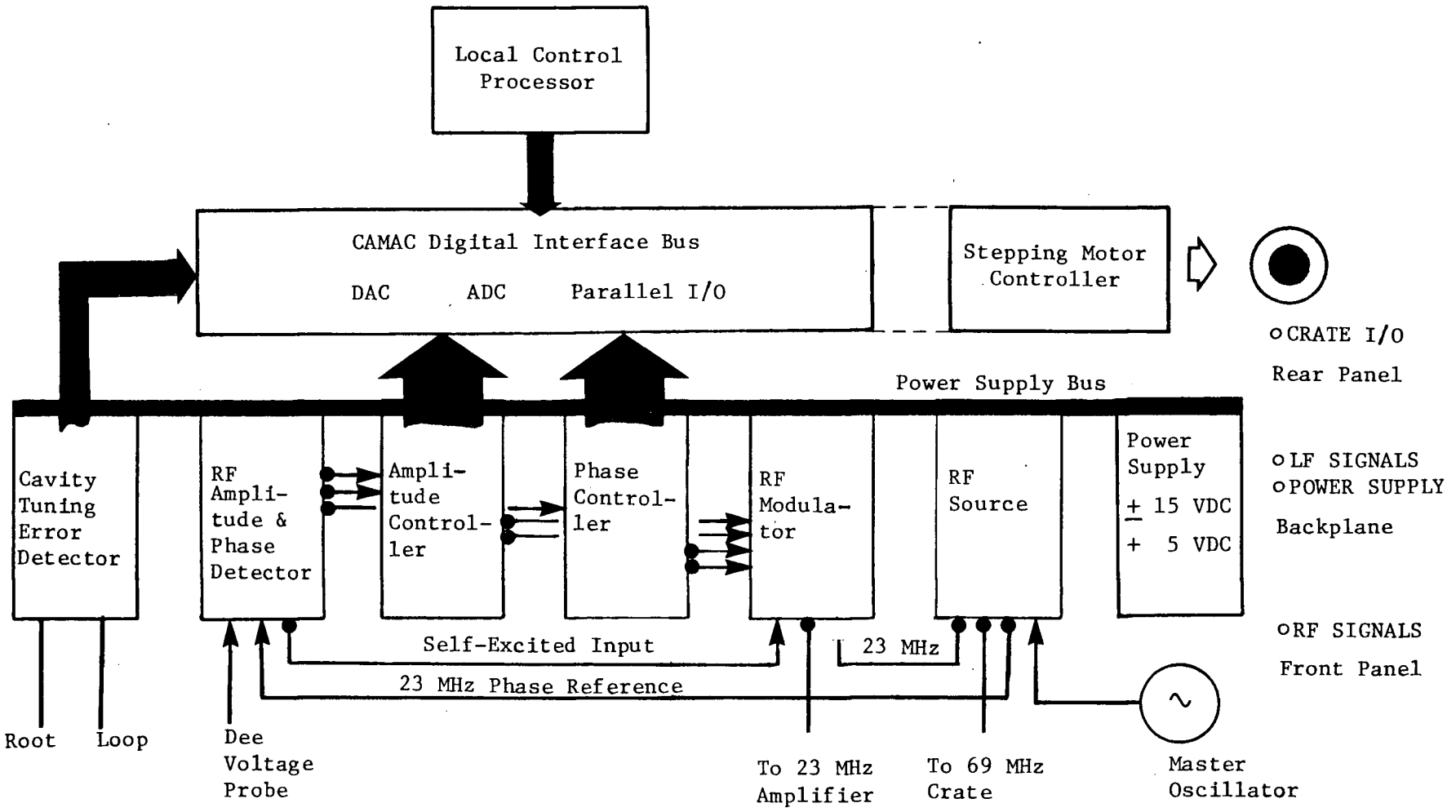

Fig. 4.36 Routing of Signals Between Functional Modules - 23 MHz Analog Signal Processing Crate

instead of software. This would reduce the complexity of and timing constraints on the RF control system software without significantly increasing the complexity of the hardware.

Demonstration of the New RF Control System on the Cyclotron

The RF systems test facility can only be used to demonstrate that the control system operates safely and reliably. The true test of the control system's performance must take place on the cyclotron itself under normal operating conditions. The problem of interfacing the new control system to the cyclotron central control system has not yet been investigated although it seems likely that the control program will initially mimic the existing control system's hardware interface in software. In a few years, however, TRIUMF plans to upgrade the central control system. This provides an opportunity to consider the existing central control - RF control system interface, identify necessary or desirable improvements and implement them with minimal disruption to cyclotron operating schedules.

Evaluating and Improving the Performance of the New RF Control System

The problem of evaluating the performance of the RF control system is surprisingly difficult and lies at the heart of the fundamental problem limiting the stability of the accelerating voltage in the cyclotron at the present time - the lack of good measures of the quantity actually being controlled. While it is reasonably easy to stabilize

the output from a given dee voltage probe to within the desired tolerance, it is not as easy to stabilize the radial position of the final turn or the energy of the proton beam that finally emerges from the cyclotron exit horn to within the same tolerance. As noted at the beginning of this chapter, the performance of a control loop is ultimately limited by the quality of the measurement presented to it. It is important that special effort be applied to the development of better beam diagnostics in general and improved accelerating voltage measurement in particular.

References:

[1] E.W. Blackmore, G. Dutto, M. Zach. "TRIUMF Central Region Cyclotron Progress Report." *Proc 6th Int Cyclotron Conf,* pp 95-101 (1972).

[2] K.L. Erdman, K.H. Brackhaus, R.H.M. Gummer. "Some Aspects of the Control and Stabilization of the RF Accelerating Voltage in the TRIUMF Cyclotron." *Proc 6th Int Cyclotron Conf,* pp 444-450 (1972).

[3] R.H.M. Gummer. "Accelerating Voltage Stabilization and Control in the TRIUMF Cyclotron." *IEEE Trans* NS-22(3):1257-1260 (June 1975).

[4] K.H. Brackhaus. "The Generation and Control of 1.5 Megawatts of RF Power for the TRIUMF Cyclotron." PhD Dissertation, University of British Columbia (1975).

[5] L. Durieu, CERN/TRIUMF. Private communication (August 1984).

[6] P.K. Sigg. "New RF-Control Systems for the TRIUMF Cyclotron." TRIUMF Design Note TRI-DN-83-32 (August 1983).

[7] L. Durieu. "Re-examination of RF System Tolerances for Separated Turn Acceleration in TRIUMF." TRIUMF Internal Report (September 1983).

[8] N.M. Schmidt and R.F. Farwell. "Understanding Electronic Control of Automation Systems." Dallas, Texas: Texas Instruments, chapter 3 (1983).

[9] C.C. Foster. "Real Time Programming - Neglected Topics." Reading, Massachusetts: Addison-Wesley Publishing Company. pp 107-146 (1981).

[10] P.H. Garrett. "Analog Systems for Microprocessors and Minicomputers." Reston,Virginia: Reston Publishing Company, Inc. pp 183-202 (1978).

[11] R.J. Vader and H.W. Schreuder. "New Methods for Stabilizing Dee Voltage and Beam R.F. Phase." *IEEE Trans* NS-26(2):2205-2208 (April 1979).

[12] J.G. Ziegler and N.B. Nichols. "Optimum Settings for Automatic Controllers." Trans ASME 64:759-768 (November 1942)

[13] S.R. Trost and C. Pomernacki. "VisiCalc for Science and Engineering." Berkeley, California: Sybex, Inc. pp 113-115 (1983).

[14] C.L. Smith, A.B. Corripio, and J. Martin, Jr. "Controller Tuning from Simple Process Models." Instrumentation Technology pp 39-75 (December 1975).

[15] P. von Rossen, K. Euler, and F. Hinterberger. "A New Method for High Precision Dee Voltage Stabilization." *Proc 10th Int Conf on Cyclotrons and their Applications*, pp 371-372 (1984).

[16] R.S. Burge, TRIUMF. Private communication (September 1985).

[17] J.R. Richardson. "Sector-Focusing Cyclotrons." *Prog Nucl Tech Instr* 1:57-158 (1965).

[18] J.E. Hemenway. "Powerful VME Bus Features Ease High-level Microcomputrer Applications." *Electronic Design News* Vol 29 No 1 (January 12, 1984).

[19] U.S. NIM Committee. "CAMAC Tutorial Articles." Washington, D.C.: Energy Research & Development Administration. (Reprint Volume - October 1976)

[20] J. Millman. "Microelectronics: Digital and Analog Circuits and Systems." New York: McGraw-Hill Book Co., pp 649-651 (1979).

[21] B. Bischof. "The RF-System of the Flattop-Acceleration Structure in the SIN 590-MeV-Ring Cyclotron." *IEEE Trans* NS-32(2):2186-2189 (April 1979).

[22] P.K. Sigg. "Improvements in the SIN-Injector RF System." *Nucl Inst Meth* 155:1-10 (1978).

[23] K. Meisner, H. Edwards, J. Fitzgerald, and Q. Kerns. "A Low Level RF System for the Fermilab Tevatron." *IEEE Trans* NS-(5):1687-1689 (October 1985).

[24] P. Brown, E. Ciapala, S. Hansen, E. Peschardt, and J. Sladden. "The LEP Radio-Frequency Low Power System." *IEEE Trans*NS-32(5):2032-2034 (October 1985).

[25] D. Howard. "A Versatile RF Controller" *IEEE Trans* NS-32(5):2876-2878 (October 1985).

[26] C. Bowick. "RF Circuit Design." Indianapolis: Howard W. Sams & Co. Inc., pp 160-161 (1982).

[27] B. Blood. "Interfacing with MECL 10,000 Integrated Circuits." Pheonix, Arizona: Motorola Semiconductor Products, Inc. Application Note AN-720 (1974).

[28] "MECL System Design Handbook." Pheonix, Arizona: Motorola Semiconductor Products, Inc. (1982).

[29] V.F. Kroupa, ed. "Frequency Stability: Fundamentals and Measurement." New York: IEEE Press (Reprint Volume - 1983).

[30] R.V. Garver. "Microwave Diode Control Devices." Dedham, Massachusetts: Artech House, Inc. pp 215-287 (1976).

[31] "IF Baseband Signal Processing Components." Merrimac Industries, Inc. Catalog M-80-3 p 54-55 (1980).

[32] "TRW RF Semiconductors." Lawndale, California: TRW Electronic Components, Inc. (1979 Catalog).

[33] L. Durieu, CERN/TRIUMF. Private communication (1984).

[34] M.K. Craddock and J.R. Richardson. "Magnetic Field Tolerances for a Six-Sector 500 MeV H- Cyclotron." TRIUMF Report TRI-67-2, p 13 (December 1968).

[35] K.L. Erdman. Discussion following: K.L.Erdman, K.H. Brackhaus, and R.H.M. Gummer. "Some Aspects of the Control and Stabilization of the RF Accelerating Voltage in the TRIUMF Cyclotron." *Proc 6th Int Cyclotron Conf*, p 450 (1972).

[36] D.A. Dohan, TRIUMF. Private communication (1985).

[37] R. Hohbach. "Results of Recent RF Work (Summer 1983) and Proposed Future Action." TRIUMF Design Note TRI-DN-83-37 (September 1983).

[38] "Kapton Polyimide Film - Type H: Summary of Properties." Bulletin H-1D, E.I. DuPont de Nemours & Co, Inc. Industrial Films Division.

[39] G.A. Massey, San Diego State University. Private communication, 16 March 1984.

[40] J.C. Wyss. "Photonic Sensors for Electromagnetic Field Measurements." *IEEE Ant Propagat Soc Newsletter* 26(5):5-9 (October 1984).

[41] G.A. Massey, D.C. Erickson, and R.A. Kadlec. "Electromagnetic Field Components: Their Measurement Using Linear Electro-Optic and Magneto-optic Effects." *Applied Optics* 14:2712-2719 (November 1975).

[42] G.A. Massey, J.C. Johnson, and D.C. Erickson. "Laser Sensing of Electric and Magnetic Fields for Power Transmission Applications." *Proc SPIE* 88:91-96 (1976).

[43] G.L. Matthaei and E.G. Cristal. "Theory and Design of Diplexers and Multiplexers." in *Advances in Microwaves*, Vol 2, L. Young, ed. New York: Academic Press (1967).

[44] J.A.G. Malherbe. "Microwave Transmission Line Filters." Dedham, Massachusetts: Artech House, Inc., pp 232-262 (1979).

[45] A.B. Williams. "Electronic Filter Design Handbook." New York: McGraw-Hill Book Co. (1981).

[46] E. Christian. "LC-Filters: Design, Testing, and Manufacturing." New York: John Wiley & Sons (1983).

[47] M.F. DeMaw. "Practical RF Communications Data for Engineers and Technicians." Indianapolis: Howard W. Sams (1978).

[48] M.F. DeMaw. "Ferromagnetic-Core Design and Application Handbook." Englewood Cliffs: Prentice-Hall, Inc. (1981).

[49] R.A. Mack. "Electrical Interference, Grounding, and Shielding." Cambridge Electron Accelerator, Harvard University Report CEAL-TM-170 (30 March 1967).

[50] J. White. "Wiring of Data Systems for Minumum Noise." *IEEE Trans* RFI-5:77-82 (March 1963).

[51] J. Millman. "Microelectronics - Digital and Analog Circuits and Systems." New York: McGraw-Hill Book Co. pp 26-56 (1979).

[52] R.C. Dobkin. "Precision AC/DC Converters." National Semiconductor Linear Brief 8 (August 1969).

[53] R.C. Dobkin. "True rms Detector." National Semiconductor Linear Brief 25 (June 1973).

[54] W. Jung. "Op Amp Cook Book." Indianapolis: Howard W. Sams, Inc. (1977)

[55] W.C. DeAgro. "Wide Dynamic Range Linear Detection." *RF Design* 8(9):29-30,32 (September 1985).

[56] S. Evans. "A New Approach to Op Amp Design." *RF Design* 8(9):56-57,59 (September 1985).

[57] P.R. Clement and W.C. Johnson. "Electrical Engineering Science." New York: McGraw-Hill Book Co. Inc. pp 254-256 (1960).

[58] W.H. Hayward. "Introduction to Radio Frequency Design." Englewood Cliffs: Prentice-Hall, Inc. pp 318-323 (1982).

[59] "29 Most Frequently Asked Questions About Phase Detectors." Brooklyn, New York: Mini-Circuits (1980).

[60] H.M. Berlin. "Design of Phase-Locked Loop Circuits, with Experiments." Indianapolis: Howard W. Sams & Co. Inc., pp 24-51 (1978).

[61] J. Briaud. "RF-Phase Detector Modules." *Proc 10th Int Conf on Cyclotrons and their Applications*, pp 364-366 (1984).

[62] C.R. Jackson. "Selecting the Right Filters for Digital Phase Detectors." in *Circuits and Software for Electronics Engineers*, H. Bierman, ed. New York: McGraw-Hill Book Co. pp 98-99 (1983).

[63] B.O. Pedersen. "Phase-Sensitive Detection with Multiple Frequencies." *IRE Trans Instr*, pp 349-355 (December 1960).

[64] "Analog Circuit Design Seminar." Analog Devices (April 1982).

[65] "Data Conversion Seminar." Analog Devices (April 1982).

[66] "Applications Manual for Operational Amplifiers - A Library of Practical Feedback Circuits." Dedham, Massachusetts: Philbrick/Nexus Research (1968).

[67] D.E. Pippenger and E.J. Tobaben. "Linear and Interface Circuits Applications - Volume 1." Dallas, Texas: Texas Instruments, Inc. pp 2-1 to 3-24 (1985).

CHAPTER 5

SUMMARY AND CONCLUSIONS

5.1 SUMMARY

This thesis has described certain aspects of the third harmonic RF flat-topping project at TRIUMF. The following major points were discussed:

Chapter One

- advances in cyclotron design that have been applied to the TRIUMF cyclotron and the advantages of "flat-topping" or otherwise modifying its accelerating voltage

Chapter Two

- how a "flat-topped" accelerating voltage waveform can compensate for certain second order effects including energy dispersion and longitudinal space charge forces within the beam packet and deviations from isochronism in the cyclotron's phase history and thus make it easier to accelerate the ion beam in separated turns at the extraction radius and the required tolerances on the amplitude and phase stability of the accelerating voltage

Chapter Three

- the problems, including conflict with operating schedules and residual radioactivity in the cyclotron vacuum tank, that are associated with developing new RF system components using the cyclotron itself and the need to use replicas of the RF system, such as the 1:10 scale model

and the RF systems test facility, for development work

- criteria for designing cavity tuning mechanisms and the size, location, and mechanical design of loops for coupling RF power to the fundamental and third harmonic modes in the test facility cavity and the cyclotron
- description and experimental evaluation of a prototype cavity tuning mechanism based on deflection of the dee liner (ground panel)
- a procedure for test facility RF system start-up and cavity tuning under operating conditions similar to those in the cyclotron, based on knowledge of the effects of multipactoring, constraints on the operation of RF power amplifiers, and experience with the existing cyclotron RF system;
- demonstration of a flat-topped accelerating voltage in the TRIUMF RF systems test facility cavity at operational dee voltage levels (100 kV - fundamental and 11 kV - third harmonic)

Chapter Four

- the need to replace the existing RF control system and the conceptual design of a new control system
- a description of the four modes of RF system operation and the new RF system control program
- the design and testing of a prototype version of the new cyclotron RF control system and aspects of the design that should be investigated or corrected before a second prototype is constructed

- problems associated with the measurement of the accelerating voltage and the current state of development of the RF detector section of the new RF control system

Supporting material is contained in the four appendices.

5.2 STATUS OF THE THIRD HARMONIC RF FLAT-TOPPING PROJECT PRIOR TO THE COMMENCEMENT OF THIS DESIGN STUDY

The RF flat-topping project at TRIUMF has evolved in three distinct phases:

Phase One (circa 1969): A proposal to flat-top the accelerating voltage in the TRIUMF cyclotron based on exciting both the fundamental and third harmonic accelerating modes in the same RF cavity was presented.

Phase Two (circa 1972): Prochazka presented a design study of the possible tuning mechanisms and cavity coupling and matching circuits that would be required to implement such a scheme.

Phase Three (circa 1983): The concept of third harmonic flat-topping was resurrected, for reasons of both need (plans to extract H- from the cyclotron) and opportunity (the RF Resonator Replacement Program).

By 1983, when the current design and development effort began, two important milestones had already been accomplished:

a. After over forty years, a third harmonic RF system had finally (1981) been successfully installed in a cyclotron (at the Swiss Institute for Nuclear Research in Zurich) and it was confirmed that a

flat-topped accelerating voltage could substantially improve a cyclotron's operating characteristics and the properties of its ion beam; and,

b. Construction and testing of the first major component of TRIUMF's third harmonic RF system, a 100 kilowatt 69 MHz RF power amplifier, had been completed.

In 1983, the task of solving the three remaining problems began:

a. The design of improvements to the mechanical structure of the TRIUMF cyclotron RF cavity, including redesign of the cantilevered hot arms, central region, and flux guides that were planned under the terms of the resonator replacement program and solutions to the problems with coupling between the fundamental (23 MHz) mode in the cyclotron RF cavity and parasitic modes in the beam gap ("RF Leakage");

b. The design of modifications to the TRIUMF cyclotron RF cavity that are required for third harmonic RF system operation, including new fundamental and third harmonic tuning mechanisms and the third harmonic coupling loop and matching section; and,

c. The improvements to the existing fundamental RF control system that would be required to achieve

maximum benefit from the third harmonic RF system and the design of the new third harmonic RF control system based on the fundamental system;

This thesis project was principally concerned with the last two issues.

5.3 RESULTS OF THIS STUDY

5.3.1 Demonstration of a Flat-topped Accelerating Voltage in the RF Systems Test Facility

The major objective of this work, demonstration of a flat-topped accelerating voltage in the TRIUMF RF systems test facility, was accomplished under Dr. T.A. Enegren's direction and with the assistance of the RF systems group.

These tests confirmed that the fundamental and third harmonic modes could be excited simultaneously and reliably in an evacuated RF cavity that is mechanically similar to the cyclotron RF cavity. Methods and procedures for tuning the RF cavity, coupling power into the RF cavity, and dealing with sparking and multipactoring, were demonstrated.

The dee liner deflection tuning scheme provided sufficient tuning range to tune the cavity to the desired fundamental and third harmonic frequencies under normal operating conditions.

Multipactoring, or multiple impact secondary electron emission, can be a stubborn obstacle to the successful operation of accelerator RF cavities. In contrast to

breakdown phenomena, which set an **upper** limit to the accelerating voltage that can be reliably maintained in an accelerator RF cavity, multipactoring sets a **lower** limit to the accelerating voltage that can be reliably maintained in an accelerator RF cavity.

Although multipactor discharges in the test facility cavity were easily avoided at the fundamental frequency by pulsing the RF drive above the multipactoring threshold voltage - approximately 27 kilovolts during pulsed operation - quickly enough, they were impossible to avoid when the third harmonic mode was driven alone. Fortunately, however, it was possible to suppress third harmonic multipactoring by first exciting the fundamental mode in the RF cavity. This effectively sets the third harmonic multipactor threshold voltage to zero. If, as expected, this result is shown to apply to the cyclotron RF cavity, the turn-on procedure for third harmonic mode will be far simpler than for the fundamental mode since pulsing the RF drive above a threshold will not be required.

5.3.2 The New RF Control System

The second major objective of this work, design and development of a prototype version of the new RF control system, was accomplished under Dr. L. Durieu's direction with technical assistance from technicians in the Technology and Administration Division, particularly Mr. P. Bennett.

The prototype control system performed well during operational tests conducted on the RF systems test facility and, if the second prototype incorporates the minor improvements suggested by these tests (see section 4.3), it should easily meet the design objectives that have been set for it.

5.4 FURTHER WORK

Much work remains to be done before TRIUMF will be able to demonstrate a flat-topped accelerating voltage in the 520 MeV cyclotron.

5.4.1 Parasitic Modes in the Cyclotron Beam Gap

The most critical issue is the problem with parasitic modes in the beam gap which 1:10 scale model studies suggest are even more troublesome at third harmonic than they are at the fundamental frequency. Resolving this problem has occupied the bulk of the attention of the Cyclotron Development and RF Systems groups at TRIUMF during the past two years.

5.4.2 Mechanical Design of Modifications to the Cyclotron RF Cavity

Once the modifications to the RF cavity that are required for third harmonic operation, including the modifications to the flux guides and central region, and the new cavity tuning and coupling mechanisms, have been laid out by accelerator RF specialists, the principal constraints and difficulties associated with implementing these modifications arise from:

a. the large amounts of RF power involved (1.2 megawatts at 23 MHz, up to 100 kilowatts at 69 MHz) and the resulting problems with heat removal;

b. mechanical vibrations that are excited by the flow of cooling water in the dees and other structures;

c. the restrictions placed on the mechanical design of RF system components by the radiation environment, the need to choose materials that keep contamination of the vacuum to an absolute minimum, and the very small volume within the cyclotron vacuum tank that is allocated to the RF cavity.

The mechanical engineering problems associated with the redesign of the RF cavity are not trivial and must be solved by experienced mechanical engineers working with RF specialists.

5.4.3 A Second Prototype RF Control System

A second prototype version of the new RF control system will be designed and constructed. The minor deficiencies that have been encountered during tests of the first prototype will be corrected. The second prototype will be used to evaluate the control system design in the cyclotron environment after extensive testing at the RF systems test facility.

Before a second prototype is constructed, however, a dedicated local control processor must be selected to

replace the Cyclotron Development VAX-11/730 and a prototype version of the RF control system software must be written to replace the relatively crude test programs currently implemented.

Until the second prototype has been built and debugged using the RF systems test facility, it will not be possible to test the effectiveness of Durieu's compensation scheme for regulating the amplitude and phase of the accelerating voltage. In the meantime, however, it would be useful to investigate methods for tuning the analog controller for optimum performance once it has been installed, as discussed in section 4.1.

5.4.4 RF Detection

Ultimately, the performance of the new radio frequency control system will be limited by the accuracy of the measurement of the accelerating voltage amplitude and phase that is presented to the analog controller. Measurement of the amplitude and phase of the accelerating voltage to the precision required for acceleration in separated turns ($\pm$ 80 ppm - 23 MHz amplitude, $\pm$ 660 ppm - 69 MHz amplitude, $\pm$ 0.12 degrees - 69 MHz phase) will be difficult because of problems associated with mechanical vibration of the cantilevered hot arms and variations in the temperature of various components of the RF detection sub-system.

The development of the RF detection sub-system is not yet complete. Although working prototypes of the detectors

have been built and shown to function properly, many aspects of detector performance, including their precision and temperature stability, have not yet been determined with accuracy. Suggestions for the next stage in the development of the new RF detectors were discussed in section 4.4.

5.5 CONCLUSIONS

Successful demonstration of a flat-topped accelerating voltage in the test facility cavity suggests that if the problems with parasitic modes in the beam gap can be solved, then it will be possible to flat-top the accelerating voltage in the TRIUMF cyclotron. If the problem with the accelerating voltage amplitude and phase measurement can be resolved, it should be possible to achieve acceleration in separated turns near the extraction radius. Development of a procedure for tuning the accelerating voltage control loops, similar to the Ziegler-Nichols technique but applicable to type 2 (double integral) controllers, should be investigated.

References:

[1] T. Enegren, L. Durieu, G. Dutto, D. Michelson, R. Poirier, and R.E. Worsham. "Recent Prototype Studies and Measurements Toward Third Harmonic Flat-topping at TRIUMF." 1984 European Conference on Progress in Cyclotrons: Aachen, West Germany. (November 1984)

[2] T. Enegren, L. Durieu, D. Michelson, and R.E. Worsham. "Development of Flat-topped RF Voltage for TRIUMF." *IEEE Trans* NS-32(5):2936-2938 (October 1985).

APPENDIX A

THE TRIUMF MESON FACILITY - 1985

Sponsored by: University of Alberta
University of British Columbia
University of Victoria
Simon Fraser University

Address:

Telephone:

Telex:

Director:

TRIUMF is Canada's national facility for intermediate energy nuclear physics. The concept of a cyclotron based meson factory originated with J.R. Richardson of UCLA in the early 1950's. A University of California (UCLA) proposal [1] to build a pion facility based on an H- cyclotron was defeated in the early 1960's by a rival proposal from Yale University to build the 800 MeV / 1 mA proton linear accelerator at Los Alamos. In 1966, a scaled down version of the UCLA proposal - a meson workshop called TRIUMF [2] - was submitted to the Canadian Atomic Energy Control Board by four universities in western Canada. TRIUMF was funded for design and development in April 1968 by the Atomic Energy Control Board. Construction of the 520 MeV H- cyclotron began in July 1970. The first full energy proton beam was extracted on 15 December 1974. This was

quickly followed by the first simultaneous extraction of two proton beams with different energies on 20 February 1975 [3]. Full intensity (100-microampere) proton beams were first extracted on a routine basis in 1978. The first full year of the TRIUMF science program was 1982. A beam production summary is presented in fig. A.1.

Much of the TRIUMF cyclotron's versatility, especially compared to her sister meson factories at Los Alamos and Zurich, comes from using the cyclotron to accelerate negative hydrogen ions rather than protons. Beam extraction by electronic stripping (conversion of H^- to H^+ by passing the beam through a pyrolitic graphite stripping foil) is nearly 100 percent efficient and can be used to extract protons from a wide range of orbit radii, hence beam energies. This is in marked contrast to the situation encountered when extraction of a proton beam is initiated by electrostatic deflection:

a. extraction is very inefficient unless turns are well separated at the extraction radius; and,

b. extraction can only be accomplished at a single radius.

At TRIUMF, the energy of the proton beams delivered to the two major beamlines (BL 1 and BL 4) is continuously variable between 180 and 520 MeV. This particular feature presents some unique opportunities for studies of nuclear structure at intermediate energies because a major change in beam energy can be accomplished in about two hours, a great

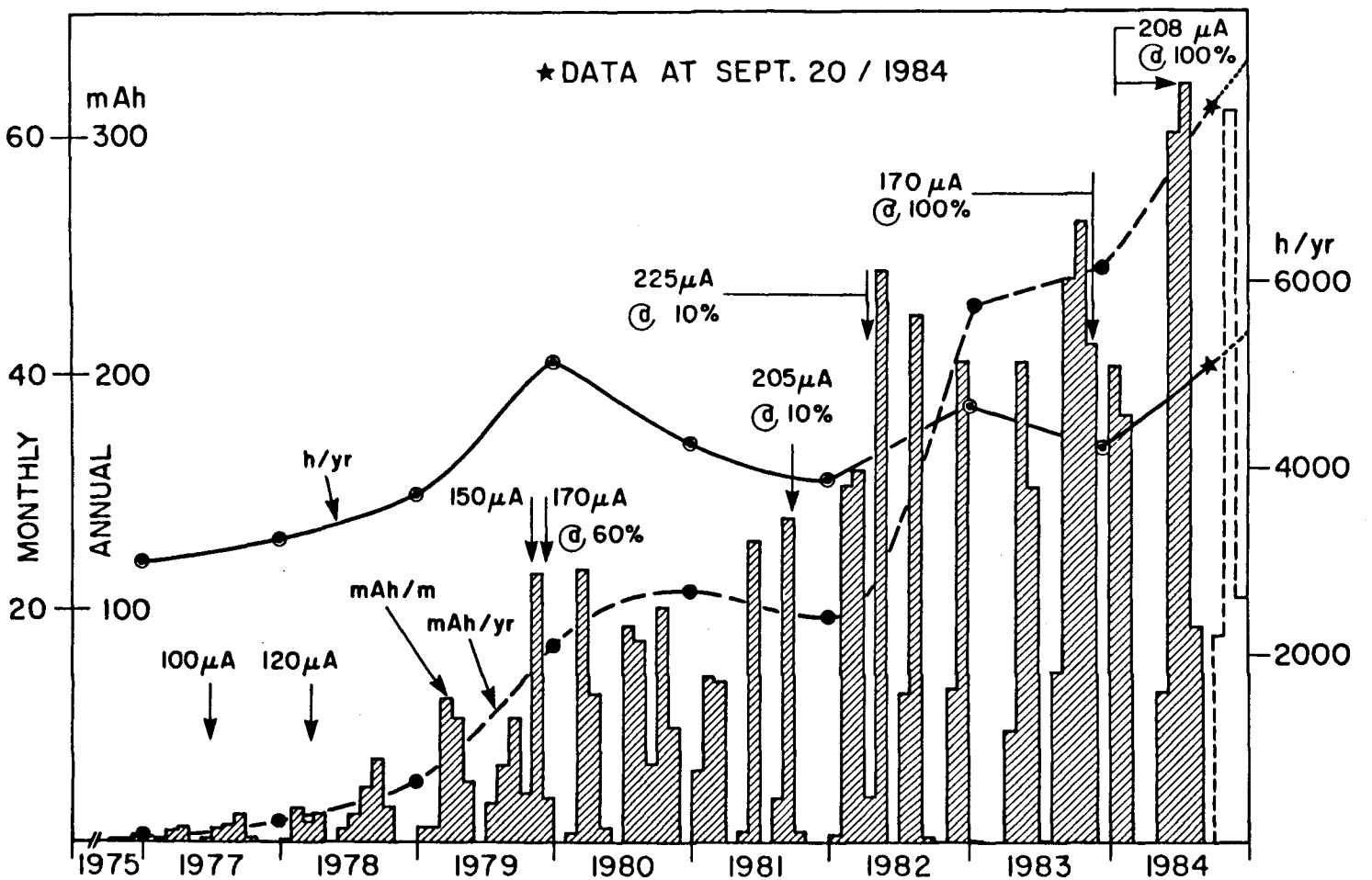

Fig. A.1 TRIUMF - Summary of Beam Production (1975 - 1984)

reduction over the time required with a traditional variable energy machine [4]. A minor beamline (BL 2C) is used to transport low energy protons (less than 100 MeV) to isotope production targets. Several beams with very different energies and currents can be extracted simultaneously. Beam current split ratios of greater than 100 000 to 1 can be reliably supported during routine beam delivery.

The average strength of the main magnetic field must increase radially to maintain isochronism because the effective mass of the protons increase with energy. Normally, however, a radially increasing magnetic field vertically defocuses the beam, allowing it to strike the vacuum tank and other structures. The azimuthal variations and the spiral shape of the TRIUMF main magnet provide vertical focusing to compensate for this effect. In TRIUMF, at high energies, the spiral angle focusing term is up to fifteen times larger than the term contributed by the azimuthal or "Thomas" variations.

When the H- ion beam reaches relativistic velocities, the loosely bound second electron can be removed from the H- ion by the electric field resulting from the Lorentz transformation of the main magnetic field into the rest frame of the ion. The neutral hydrogen atoms that result from electromagnetic stripping are not guided by the cyclotron magnetic field and are lost. At higher energies, particularly between 450 and 500 MeV, this mechanism

accounts for a large fraction of the ion beam lost during the acceleration process. The neutral hydrogen atoms strike the wall of the vacuum tank at high velocity, making it radioactive. Residual radioactivity in the cyclotron vacuum tank (5 - 10 rads/hour) complicates the problems of modification and maintenance.

To limit electromagnetic stripping and consequent activation of the cyclotron vacuum tank, the peak magnetic field strength is made quite low. This, in turn, implies that the final orbit radius, and therefore the cyclotron RF cavity, will be large. This has conferred upon TRIUMF the distinction of being the world's largest cyclotron but unfortunately its size has made its mechanical design, particularly that of the RF cavity, extremely difficult.

The experimental facilities and beamlines are shown in fig. A.2. The cyclotron currently feeds two major beamlines:

a. Beamline 1 - Meson Hall;

b. Beamline 4 - Proton Hall;

and one minor beamline:

c. Beamline 2C - Isotope Production;

and a host of secondary beamlines fed by various production targets. Beamline 2A, which has not yet been constructed, will be used to guide 450 MeV negative hydrogen ions from the cyclotron to the KAON Factory accumulator ring.

The cyclotron is the heart of the facility. An

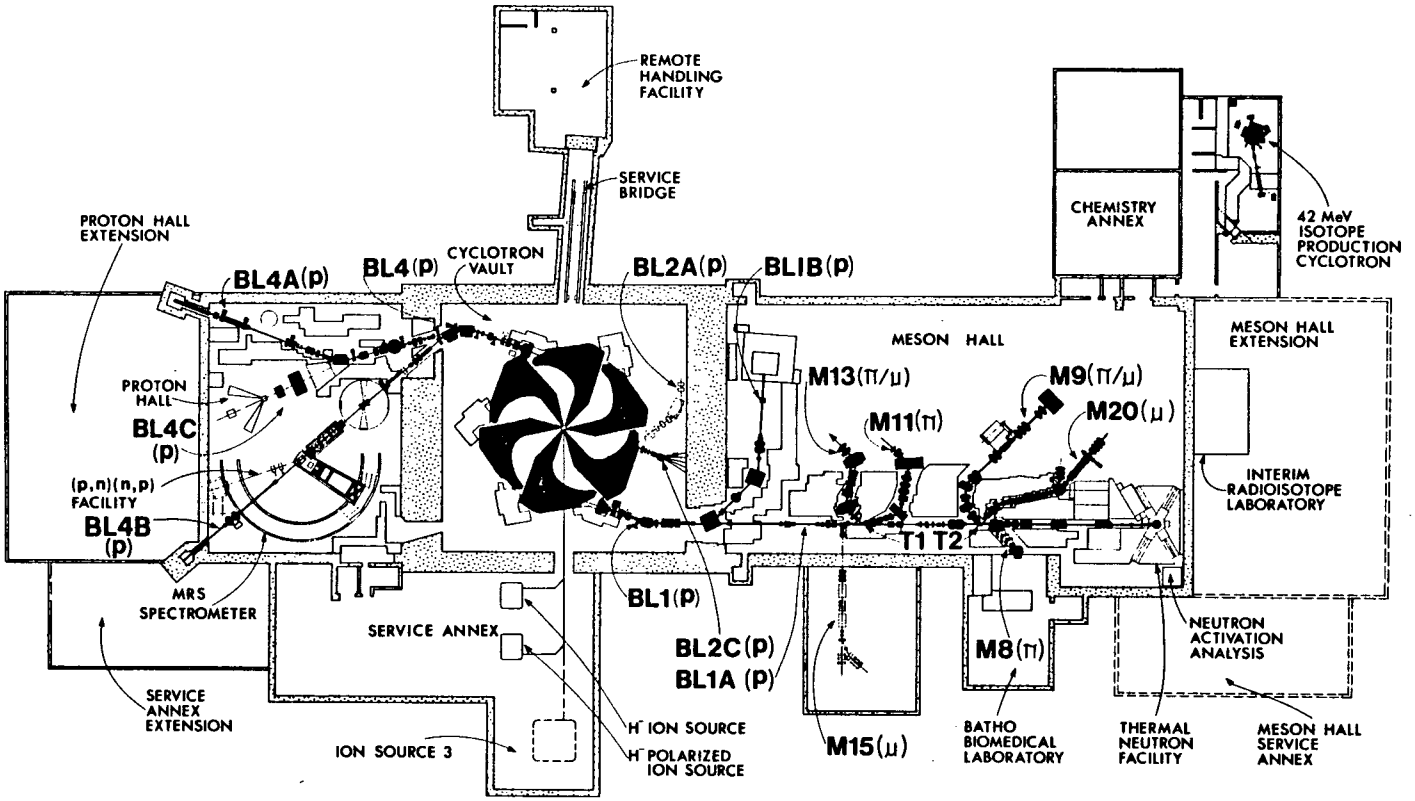

Fig. A.2 TRIUMF - Beamlines and Experimental Facilities

artist's conception of the cyclotron was shown in fig. 1.3. The cyclotron is shown in plan view in fig. A.3, and in cross-section in fig. A.4. A cross section of the cyclotron vault and service annex is shown in fig. A.5. Of particular interest is the distance signals from beam diagnostic or RF probes must travel before reaching the primary service level (level 264), the RF room, or the central control room.

HISTORY AND STATUS

Begin Design: July 1966 Begin Model Tests: December 1966

End Design: October 1968 Begin Construction: January 1970

First Beam: December 1974

Accelerator Cost: $12,000,000 (1974)

Facility Cost: $50,000,000 (1984)

Funded by: Atomic Energy Control Board
National Research Council of Canada
TRIUMF Universities

ACCELERATOR STAFF, OPERATION AND DEVELOPMENT

15 Scientists 19 Engineers

55 Technicians 22 Craftsmen

2 Graduate Students (MASc)

17 Cyclotron Operators

The cyclotron operates 24 hours per day, seven days per week during scheduled beam production. One day per week is set aside for cyclotron and beam development or planned maintenance. Six days per week are devoted to beam production for experimental users.

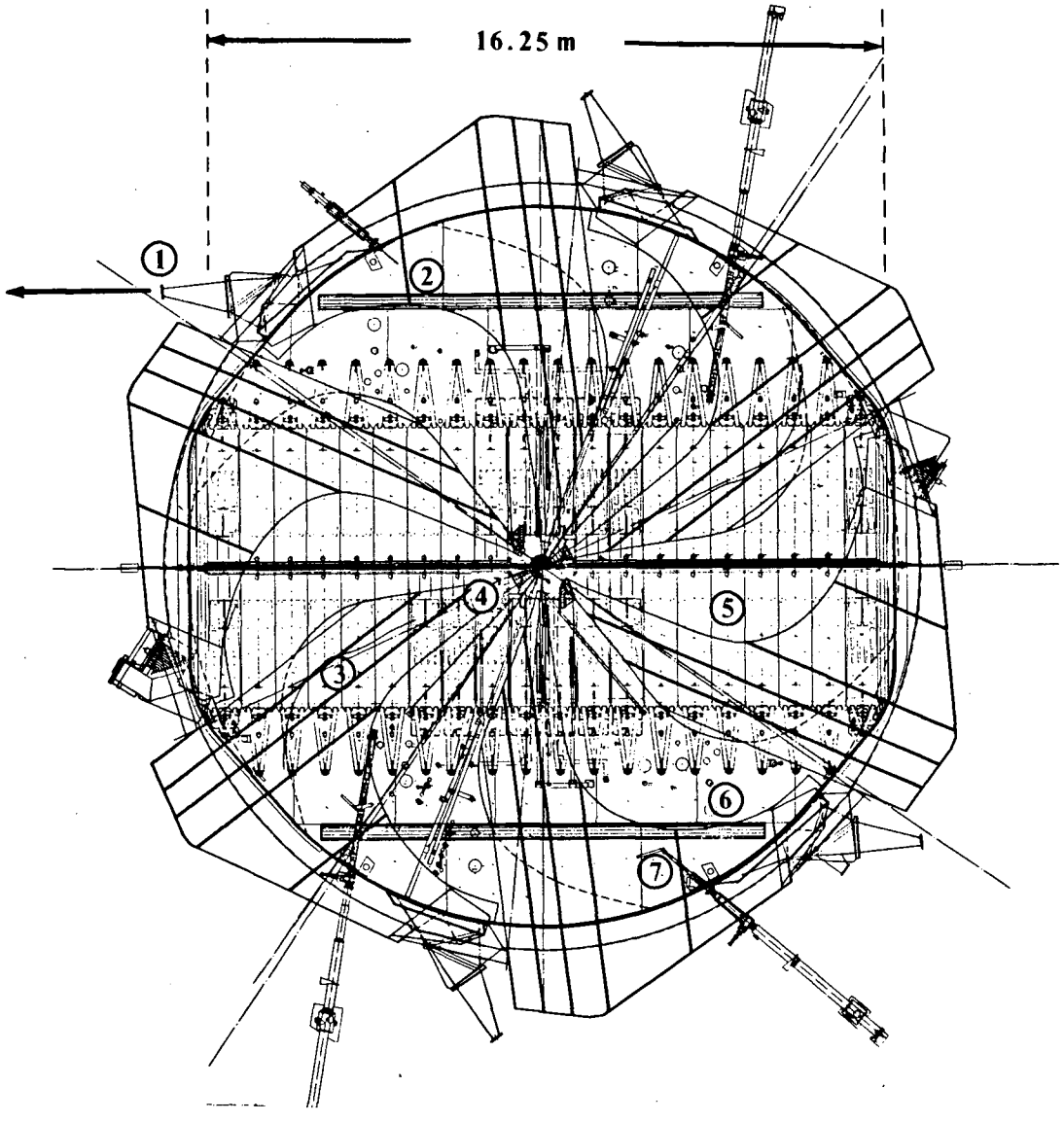

Fig. A.3 TRIUMF 520 MeV Cyclotron - Plan View

Key to Figure:

1 Beam Exit Port - to Beam line 4 and Proton Hall
2 Cryopanel
3 Magnet Sector Number 1
4 Cyclotron Central Region
- Centre Post
- Spiral Inflector
5 RADIO FREQUENCY CAVITY Resonator Segment 4L6
6 Cyclotron Vacuum Tank and Access Ports
7 Stripping Foil and Probe

The main magnet has six pairs of pole faces called sectors. They are numbered from 1 to 6 in clock-wise direction.

The RF cavity is divided into 80 segments and 8 flux guides. They are identified by quadrant (numbered from 1 to 4 in clock-wise direction), upper or lower, and by sequence (numbered from 1 to 10 outwards from the central region) eg. 4L6, item 5 above

---

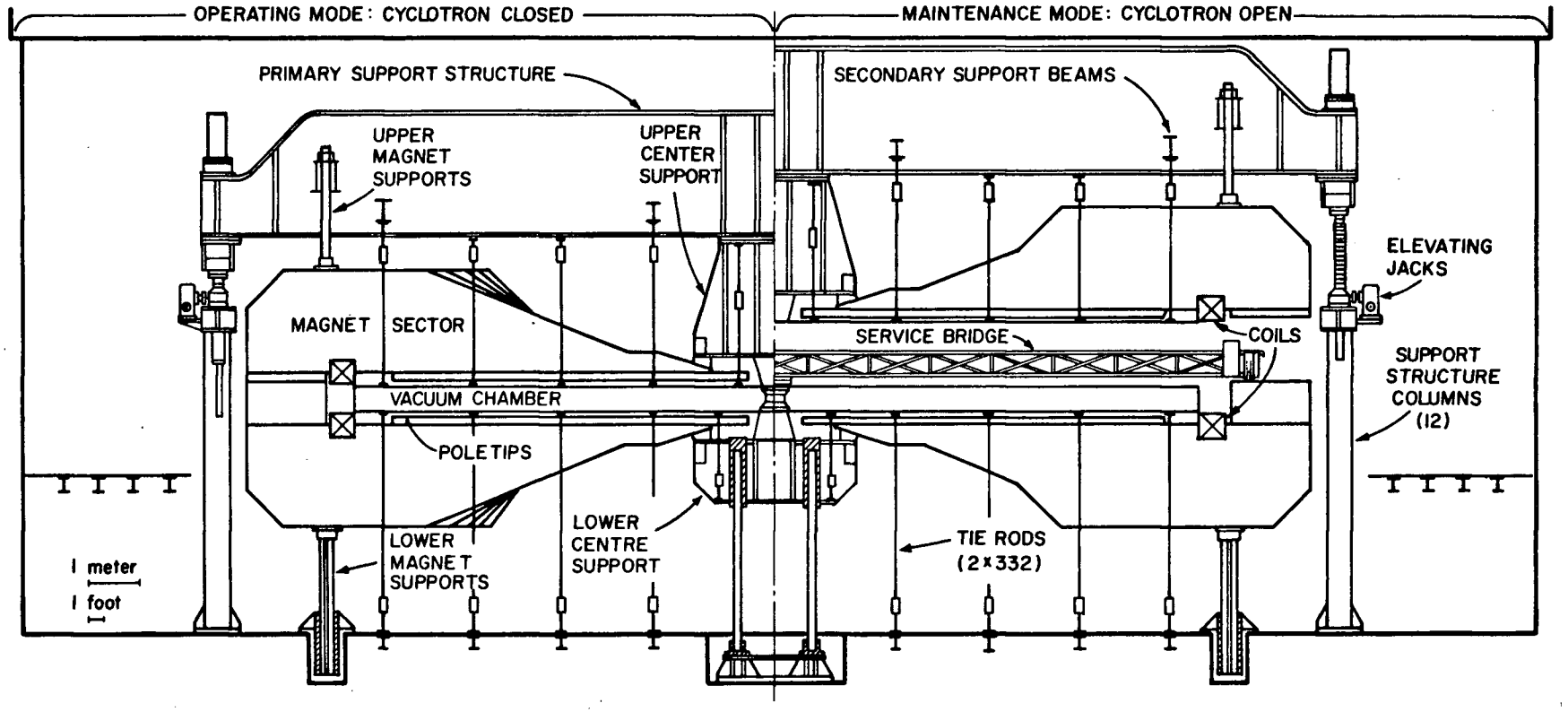

Fig. A.4 TRIUMF 520 MeV Cyclotron - Cross-sectional View

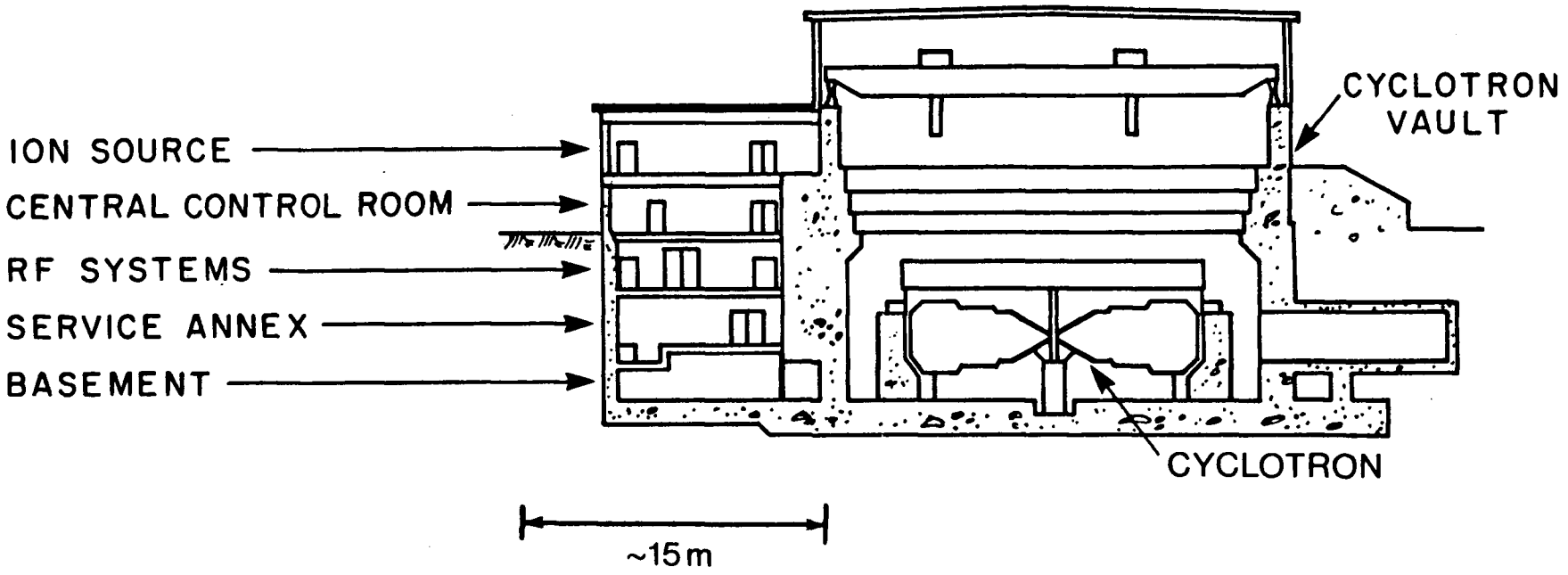

Fig. A.5 Cyclotron Vault and Service Annex - Cross-sectional View

Annual Budget for Operation and Development of Cyclotron and Experimental Facilities:

$24,000,000 (1984)

Funded by National Research Council of Canada

RESEARCH STAFF

Users: 90 in house 168 outside

Graduate Students: 35

Annual Budget for Research Activities:

$3,351,875 (1984)

Funded by Natural Sciences and Engineering Research Council

CYCLOTRON MAIN MAGNET

Diameter of Pole Face: 17.17 metres

Weight Iron: 4000 tons Coils: 170 tons

Cooling System: Closed loop active water
- AlACW (Aluminum Active Cooling Water)

Extraction Radius: 7.80 metres

Number of Sectors: 6

Maximum Spiral Angle: 72°

Trimming Coils: 55 circular - used to compensate for deviations from isochronism

13 harmonic - used to help suppress betatron oscillations

Magnet Coil Conductor: Aluminum

Power Requirements

Main Coils: 1,270 kilowatts (maximum)

Current Stability: 0.7×10^{-6}

Trim Coils: 68 kilowatts (maximum)

Current Stability: 0.1 % full scale

Magnet Parameters at 0.72×10^{6} Ampere-turns

Hills: Field Strength = 5.71 kilogauss (maximum)

Magnet Gap = 0.53 metres

Valleys: Field Strength = 1.25 kilogauss (minimum)

Magnet Gap = infinite

Average Field at Extraction Radius: 4.6 kilogauss

$$\frac{B_{max}}{\langle B \rangle} = 1.26$$

The highest possible ion energy, 520 MeV, is set by a bending limit rather than a focusing limit.

ACCELERATION SYSTEM

2 dee system - 180 degrees apart

Beam Aperture: 8 centimetres DC Bias: 0 kilovolts

The RF system operates on the fifth harmonic of the ion rotation frequency:

Range: 23.055 to 23.070 MHz

Frequency Stability: $\pm 1 \times 10^{-8}$

Maximum Dee Voltage: 85 kilovolts (fundamental)

0 (third harmonic)

Minimum Gap: 2.5 centimetres (in central region)

Dee Voltage Stability: $4 \times 10^{-4} = \frac{\text{peak to peak noise}}{\text{peak RF voltage}}$

Maximum Energy Gain per Turn: 340 keV

Beam Phase Stability: $\pm$ 2 degrees

RF Power Requirement: 800 kilowatts (fundamental)

RF Cavity Type:

Room Temperature, Doubly Reentrant,

Highly Flattened, Quarter-Wave Coaxial Cavity

RF Cavity Quality Factor: 5800 (unloaded) at 23 MHz

RF Cavity Dimensions (including Beam Gap):

16.5 metres x 6.5 metres x 0.3 metres

A major upgrade to the cyclotron RF system is currently being planned. The mechanical characteristics of the dees will be improved and provision for third harmonic flat-topping of the accelerating voltage will be built into the RF cavity and the RF control system.

VACUUM SYSTEM

Operating Pressure: 5×10^{-8} Torr

Pumps: 2 - Helium-cooled cryopanels (T = 20 K)

Area: 1.2 square metres

4 - 10 inch diffusion pump

1 - 8 inch diffusion pump

1 - 30 000 litres/second turbo pump

ION SOURCES

Ehlers PIG H-

Lamb Shift polarized H-

others under development

INJECTION SYSTEM

40 metre long 300 keV beam line with electrostatic bends and dipoles

EXTRACTION SYSTEM

Protons —> Electron stripping of H- in 25 um pyrolitic graphite foil

Negative Hydrogen Ions (proposed) —> Electrostatic deflection following excitation of coherent radial oscillation to increase separation between final turns

FACILITIES FOR RESEARCH

Shielded Area, fixed: 2350 square metres

17 targets in 12 experimental stations

10 stations may be served at the same time

Computing Facilities - not including cyclotron control systems:

1 - 48 megabyte Amdahl 5840 with double accelerator (UBC Computing Centre)

1 - VAX 8600 (clustered)

1 - VAX-11/780

1 - VAX-11/730

several VAX-11/750's and PDP-11/xx for data acquisition and experiment control

several assorted PC's, LSI-11/23, TRIMAC for single users

Other Experimental Facilities:

Polarized Fast Neutron Beam

Thermal Neutron Source

Biomedical Pion Irradiation Facility

Isotope and Spallation Facilities

CHARACTERISTIC BEAMS

PARTICLE	ENERGY RANGE (MeV)	MAXIMUM CURRENT (uA)
Primary Beam		
H- -> p	70 - 90	10
	180 - 520	208
Polarized H- -> Polarized p	180 - 520	1 78% polarization
Secondary Beams		
Pions	15 - 300	10 - 10

BEAM PROPERTIES

Pulse Width:	25 RF degrees	@	150 uA of 500 MeV H- ions
Phase Excursion (maximum):	20 RF degrees	@	100 uA of 500 MeV H- ions
Extraction Efficiency:	99.95%	@	100 uA of 500 MeV H- ions
Energy Resolution $\Delta E/E$:	0.3%	@	100 uA of 500 MeV H- ions

	0.1%	@	8 uA of 500 MeV H- ions
Emittance (π mm mrad):	3.0 axial	}@	100 uA of 500 MeV H- ions
	3.0 radial		

OPERATING PROGRAMS

Basic Nuclear Physics	Solid State Physics
Biomedical Applications	Isotope Production

High Intensity Unpolarized Beam - 70 % of production time

Low Intensity Polarized Beam - 30 % of production time

See also:

Fig 1.3 520 MeV Cyclotron - Artist's Conception

Table II Internal Beam Characteristics and Cyclotron Design Parameters

REFERENCES

[1] "Pion Facility - A High Energy Cyclotron for Negative Ions." UCLA Report (1964).

[2] E.W. Vogt and J.J. Burgerjon, ed. "TRIUMF Proposal and Cost Estimate." University of British Columbia (1966).

[3] J.R. Richardson. "The Status of TRIUMF." *Proc 7th Int Conf on Cyclotrons and their Applications*, pp 41-48 (1975).

[4] J.R. Richardson, E.W. Blackmore, G. Dutto, C.J. Kost, G.H. MacKenzie, and M.K. Craddock. "Production of Simultaneous Variable Energy Beams from the TRIUMF Cyclotron." *IEEE Trans* NS-22(3):1402-1407 (June 1975).

[5] J.M. Cameron, P. Kitching, and D.A. Hutcheon, ed. "Prospects for High Resolution Studies with A Proton Beam Between Ep = 200-500 MeV." TRIUMF Report TRI-80-2, pp 1-2 (October 1980).

[6] D.A. Dohan, G.H. MacKenzie, G. Dutto "Cyclotron Data Sheets - Entry No. 8: TRIUMF." *Proc 10th Int Conf on Cyclotrons and their Applications*, p 634 (1984).

[7] E.W. Vogt. "Report to the NRC Committee on TRIUMF." (April 1983).

[8] G.H. Mackenzie. "Studies for a TRIUMF Kaon Factory." INS KIKUCHI Winter School on Accelerators for Nuclear Physics, 29 Jan - 2 Feb 1984.

[9] R. Baartman, E.W. Blackmore, J. Carey, D. Dohan, G. Dutto, D. Gurd, R.E. Laxdal, G.H. Mackenzie, D. Pearce, R. Poirier, and P.W. Schmor. "Status Report on the TRIUMF Cyclotron." *Proc 10th Int Conf on Cyclotrons and their Applications*, pp 203-206 (1984).

APPENDIX B

THE TRIUMF CYCLOTRON'S RADIO FREQUENCY SYSTEM

B.1 INTRODUCTION

The TRIUMF cyclotron's radio frequency system was described in five conference publications and two graduate theses between 1972 and 1975: Erdman et al [1], Erdman et al [2], Prochazka (PhD) [3], Brackhaus (PhD) [4], Poirier and Zach [5], Gummer [6], and Gummer, Poirier, and Zach [7]. The RF system consists of three basic units, as shown in fig. B.1:

a. the radio frequency cavity - the structure within which the fundamental and third harmonic accelerating voltages are developed;

b. the two radio frequency power amplifiers - the fundamental power source, capable of delivering 1.8 megawatts at 23 MHz and the third harmonic power source, capable of delivering 100 kilowatts at 69 MHz; and,

c. the radio frequency control system - principally a feedback regulation system (supervised by a finite state machine) which controls system start-up, cavity tuning mechanisms, and the relative phase and amplitude of the accelerating voltages.

The existing RF system can support only a fundamental (i.e. sinusoidal) accelerating voltage. The entire RF

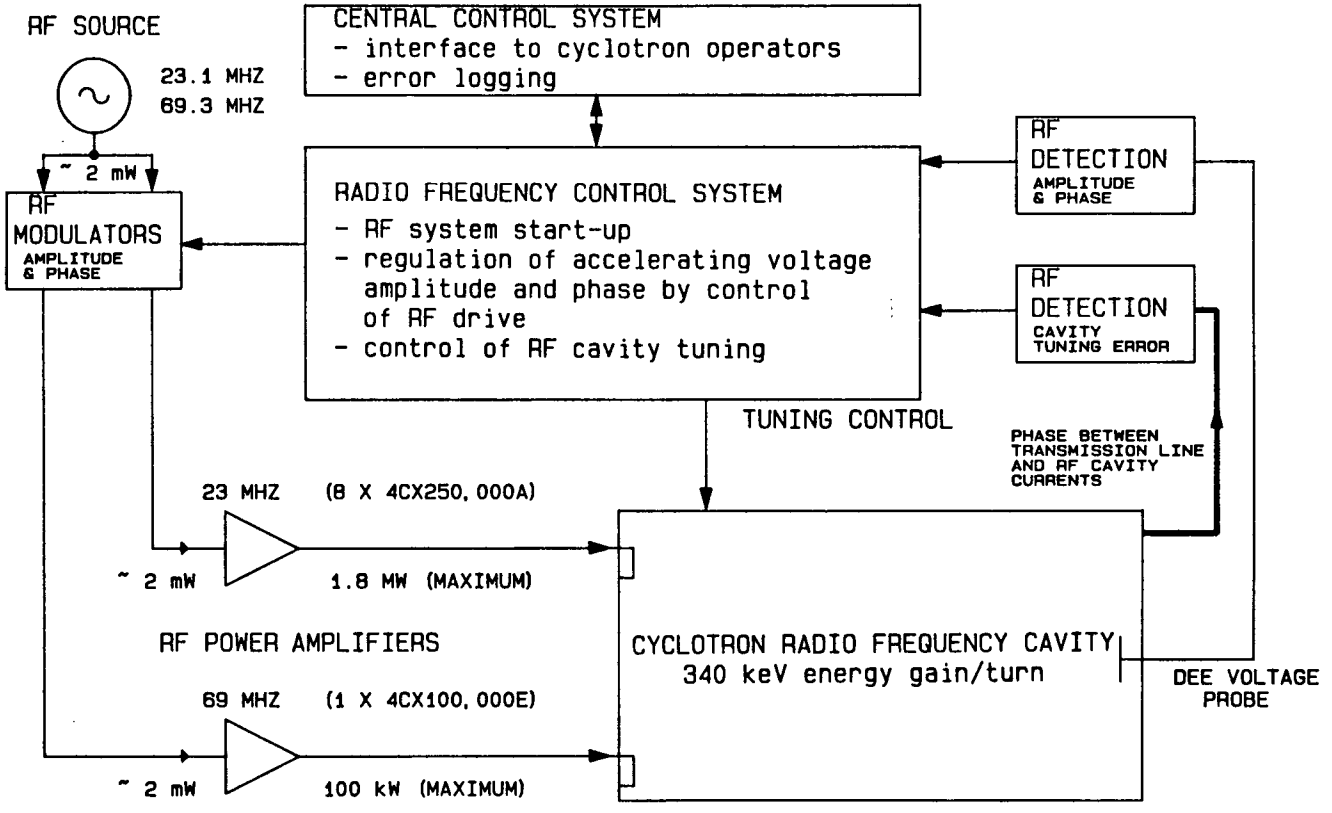

Fig. B.1 Components of TRIUMF's Radio Frequency System

cavity and the RF control system must be substantially modified or replaced before a flat-topped accelerating voltage can be excited in the cyclotron in both a safe and reliable manner (the first objective) and with sufficient stability to permit separated turn acceleration and single turn extraction (the ultimate objective).

The two RF power amplifiers are not expected to require substantial modification. Some minor changes might be needed, however, given that the 23 MHz transmitter, shown in fig. B.2, will be required to generate almost 40 per cent more power (1.2 Megawatts from 900 kilowatts) than it does now and the 69 MHz transmitter, which consists of a 1.6 kilowatt common cathode driver followed by a 100 kilowatt 4CW100,000E common grid power amplifier, has not yet been used to drive a radio frequency cavity - it has only been successfully tested using a water-cooled matched load.

B.2 THE CYCLOTRON RADIO FREQUENCY CAVITY

B.2.1 General Description

The radio frequency cavity of a classical cyclotron is a foreshortened quarter-wave coaxial structure. A hollow, semi-circular accelerating electrode, called the dee, forms the tip of the inner conductor of the capacitively-loaded quarter-wave stub. The remainder of the inner conductor of the coaxial structure, called the dee stem, extends beyond the magnet gap to the shorting plane and provides mechanical support for the dee. The shield of the coaxial structure is referred to as the dee liner. It is usually attached

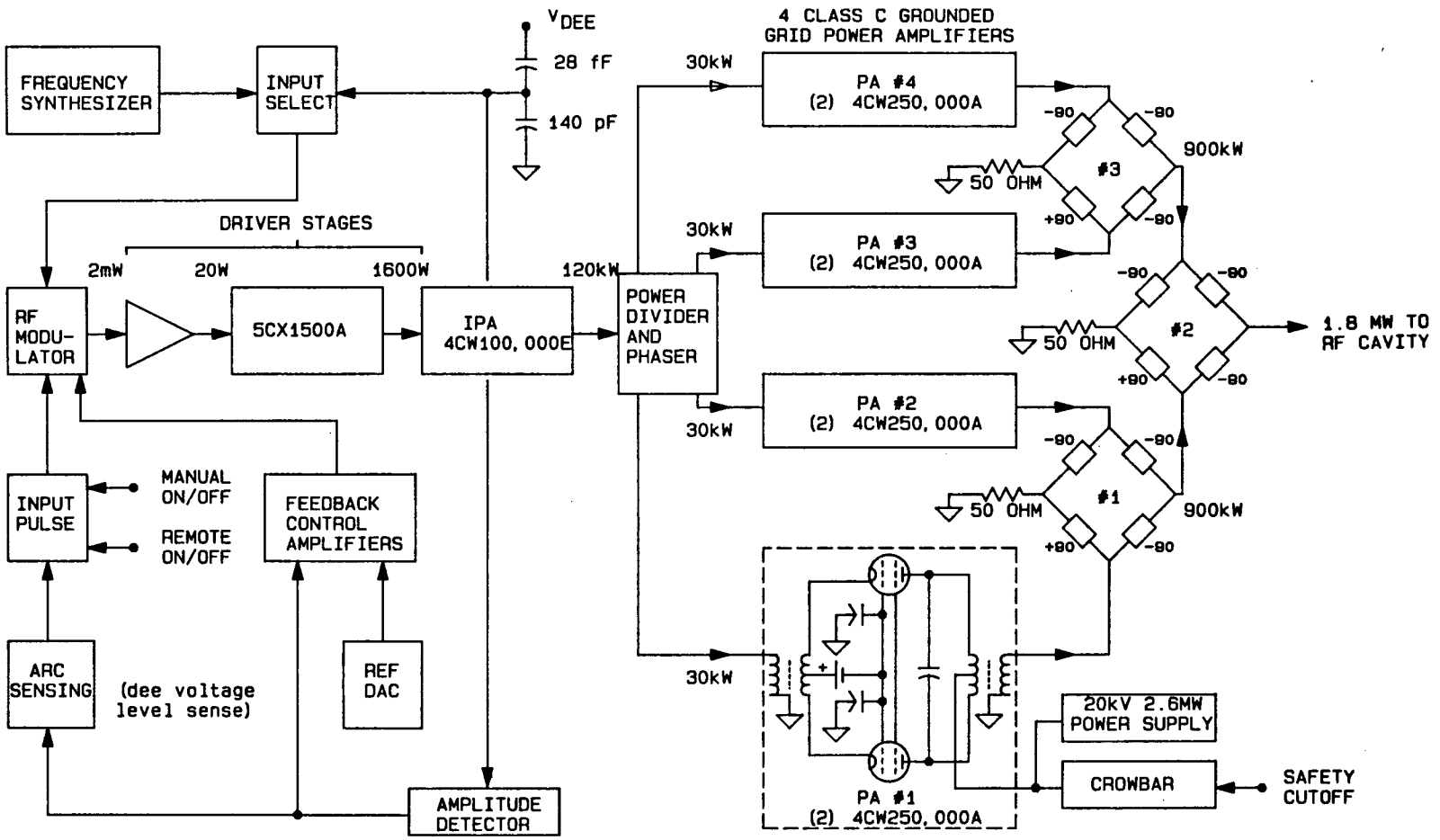

Fig. B.2 TRIUMF RF System - 23 MHz Power Source

directly to the walls of the vacuum tank. Like the dee stem, the dee liner is almost always water cooled. The accelerating voltage is developed between two dee structures which are excited in a push-pull mode. The cyclotron illustrated in Rossi's patent (fig. 1.1) is a typical example of such a structure. Examples of various dee structures used in more modern cyclotrons, but based on similar principles, were presented by Riedel [8].

The first cyclotrons to employ physically large RF systems were the synchrocyclotrons built in the late 1940's. Although the classical RF system described above was very successful in small cyclotrons, it had some serious shortcomings when scaled upward in size. When the dees are large, it is difficult to guarantee the absence of harmful parasitic modes in the cavity or severe non-uniformities in the dee voltage profile. Such structures are very difficult to model numerically and one must resort to the use of expensive scale models that do not always faithfully mimic the behaviour of the real cavity. The large dee structure may also be difficult to support mechanically. Problems with mechanical vibrations, particularly those excited by the flow of cooling water in the dee, may be difficult to suppress. Erdman [9] reported that some cyclotron facilities have begun to use insulators to provide some mechanical support for certain structures but, in general, insulators have always been considered to be far too fragile and unreliable for general use. Additional problems with

sparking, multipactoring phenomena (see also Appendix D), failure of electrical contacts that are required to support large RF currents, and difficulties in achieving the desired accelerating voltage amplitude and phase stability frustrated early RF system designers. These problems continue to frustrate many contemporary designers: Now, as then, the only solutions for the majority of RF problems lie in better mechanical engineering of the system, problems which conventionally-trained electrical engineers are not usually well prepared to address at the level of expertise required. Problems associated with the design of RF systems for large cyclotrons were reviewed by Bieth [10] at a recent cyclotron conference.

Conventional dee structures have only moderately high quality factors. Excitation of a given accelerating voltage requires that a relatively large amount of RF power be supplied to the cavity. Conventional cyclotron dees have been replaced with high Q resonant cavities at SIN [11] [12]. Virtually all of the problems listed above were eliminated, giving SIN a very high energy gain per turn of 2000 keV with RF power requirements of about 1 megawatt distributed among four fundamental RF cavities. This compares quite favourably with TRIUMF's single RF cavity which requires almost 1 megawatt of power to support an energy gain per turn of only 340 keV.

Structures in which the accelerating electrodes are located in the magnet valleys, (e.g. SIN's RF cavities) rather than between the magnet poles (e.g. TRIUMF's RF cavity), offer another advantage: they reduce the size of the magnet gap and hence the amount of power that must be supplied to the magnet. In the TRIUMF Proposal and Cost Estimate [13], it was reported that two such structures were considered for TRIUMF but "**the proposed magnet system does not lend itself to either, due to the narrow valleys and large spiral angles ...**"

The basic design of TRIUMF's radio frequency cavity was suggested by K.R. MacKenzie of UCLA. It is a doubly reentrant structure based on two quarter-wave stubs separated by a short gap. As such, it resembles a conventional cyclotron dee except that the dee stem is perpendicular to, rather than parallel to, the dee gap. The constant dee to liner spacing from the accelerating gap to the root distinguishes it from a conventional dee, however. The cavity's interior is lined with copper. It has an interior surface area of 430 square metres which encloses a volume of 21.5 cubic metres. At 23 MHz, the cavity has an unloaded quality factor of about 5800; this rises to approximately 10,000 at 69 MHz. The cyclotron's large size permits the RF cavity to be completely accommodated within the 16.5-metre diameter cyclotron vacuum tank. Unfortunately, the sheer size of the cavity and its placement between opposing magnet pole pieces have immensely

complicated the mechanical design of the cavity resulting in some persistent operational difficulties which must be corrected (see section B.2.2).

The evolution of TRIUMF's radio frequency cavity is shown in fig. B.3:

The radio frequency cavity resembles two capacitively-loaded quarter-wave stubs mounted tip to tip. Such a cavity (a) is described as being doubly reentrant. The accelerating gap is the short gap region between the two inner conductors. The inner conductors are hollow to permit ions to pass through the accelerating fields. Such a cavity can be excited in either a push-push or push-pull mode. Only the push-pull mode is useful for particle acceleration;

The structure (b) is then highly flattened so that it will fit between the pole pieces of the cyclotron main magnet. The small volume of the cavity compared to its surface area gives the structure only a moderate quality factor;

The cavity (c) is broken into 80 segments to permit easy installation and removal for repair or replacement. Forty segments are attached to the lid of the vacuum tank and the remaining forty are mounted on the floor of the vacuum tank. The ground panels (dee liner), which form the outer conductor of the coaxial structure, are rigidly attached to the wall of the vacuum tank. The hot arms (dee/dee stem), which form the inner conductor, are cantilevered panels supported by a structure referred to as

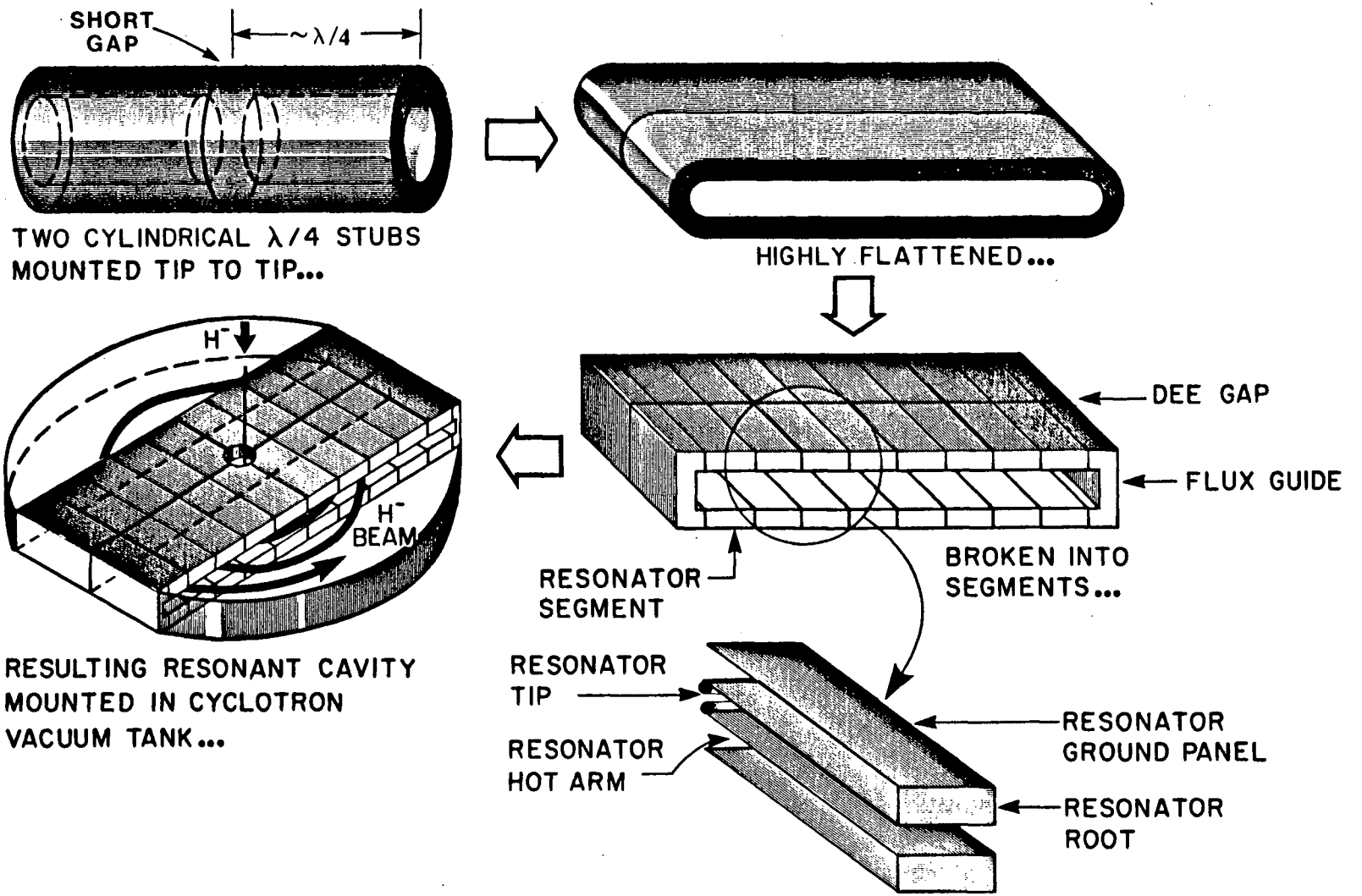

Fig. B.3 Evolution of the TRIUMF RF Cavity from a Quarter-Wave Stub

a strongback. The tips of the hot arms are shaped to support the correct field shape in the short gap for vertical focusing of the beam by the accelerating field, as depicted in fig. 2.1; and,

The resulting resonant cavity (d) is mounted in the cyclotron vacuum tank. The volume occupied by the RF cavity structure, including the beam gap between the resonator hot arms is 0.3 m X 16.5 m X 6.5 m or 32.2 m^3, including the beam gap between the hot arms. The beam aperture is approximately 0.1 m X 16.3 m.

B.2.2 The RF Resonator Replacement Program

Soon after the cyclotron was commissioned, it became apparent that among the many minor problems [7] with the RF system that were quickly dealt with there were two serious problems that could not be as easily solved:

The pneumatically actuated tuning foils located in the root of each resonator segment began to fail and had to be removed from service. Although it was suspected that the failure was due to a fault in the production of the material from which the tuning foils were manufactured and not due to a basic flaw in the actual design, the defective foils were not replaced. The RF cavity is now tuned by varying the temperature and pressure of the resonator cooling water to allow small (less than 4 kHz) changes in the cavity's resonant frequency. This "temporary" solution has performed well, on the whole for over a decade but from time to time this tuning mechanism has exhibited erratic behaviour

that has resulted in cyclotron down time; and,

The alignment of the cantilevered panels that form the inner conductor of the RF cavity's coaxial structure (the "hot arms") is more critical than was suspected during their design and development. When the panels are not well aligned, an RF voltage develops between upper and lower tips. This couples the push-pull accelerating mode in the RF cavity to parasitic modes in the supposedly field-free region (the "beam cavity") between and behind the cantilevered panels. The main structural supports for the "hot arms", referred to as strongbacks, are not water-cooled and have a tendency to droop when heated by RF power dissipated by these parasitic modes. This, in turn, tends to worsen the misalignment. The problem has largely been controlled by very careful alignment of the hot arms but adjustment is only possible from within the vacuum tank with the lid of the vacuum tank raised. Through trial and error, the hot arms have been sufficiently well aligned to permit reliable cyclotron operation but parasitic modes in the beam cavity still interfere with the operation of beam diagnostic equipment such as the non-intercepting beam phase probes and the two low energy (LE) probes. To limit damage to structures in the beam gap/cavity caused by power dissipated by the parasitic modes, the RF system is run with a dee voltage of just 85 kilovolts (fundamental only) rather than the 100 kilovolts originally planned.

Serious concern for the structural inadequacies of the the cantilevered panels and their mechanical supports led to the decision to replace them by late 1987. The RF Resonator Replacement Program [14] is concerned with design of new support structures for the panels, suppression of parasitic modes in the beam gap, and the replacement of the existing tuning mechanism with a new one that has greater reliability and a greater tuning range than the existing mechanism. Such mechanical upgrade programs are not uncommon at accelerator facilities. Sigg [15] described similar improvements to the SIN injector cyclotron RF system, including design and installation of new tuning mechanisms and dee voltage pickups that resulted in a major increase in both performance and reliability.

Although the program at TRIUMF emphasizes the improvement of cyclotron reliability, it has been recognized that attention paid to selected mechanical factors can significantly improve beam quality and improve cyclotron performance. Specific matters that have recently received increased attention include:

a. lowering the amplitude of panel vibrations excited by the flow of cooling water;

b. improving the dee voltage profile by redesigning the geometry of the central region (number one) resonator segments and the flux guides - the structures joining the upper and lower number ten resonators to complete the coaxial structure of

the radio frequency cavity; and,

c. incorporating features necessary to support third harmonic flat-topped operation of the radio frequency system.

B.3 PROPOSED RF STRUCTURES FOR FLAT-TOPPING AT TRIUMF

The replacement of all eighty resonator hot arms in 1986/87 will be an expensive undertaking of great magnitude. It provides an ideal opportunity to make the changes to the radio frequency cavity that are necessary to permit third harmonic flat-topped operation which, as related in the first chapter, has become increasingly desirable at TRIUMF.

Three methods for supporting a third harmonic accelerating mode in TRIUMF have been suggested:

a. mounting a separate cavity in the vacuum tank behind the main radio frequency cavity, as described by Laxdal [16];

b. mounting a second dee within the existing dee, as proposed for the Indiana University Cyclotron Facility (IUCF) [17] and the Ganil heavy ion facility near Caen [18]; and,

c. making the main RF cavity harmonically resonant so that it will support both the fundamental and third harmonic modes, as proposed by Erdman et al [19].

B.3.1 Separate Cavities for Fundamental and Third Harmonic Modes

The use of a physically separate cavity to support the third harmonic mode is the scheme most often cited in

proposals to flat-top cyclotrons and is the only proven scheme to date. Its physical isolation from the fundamental radio frequency cavity gives it some advantages over the other two schemes:

a. The tuning mechanisms for fundamental and third harmonic are completely independent of each other; and,

b. The fundamental and third harmonic power amplifiers are electrically isolated from each other and special transmission line filters to isolate them are therefore not required.

Excitation of a separate flat-topping cavity in vacuum could present some problems, however:

Because it does not accelerate (or, perhaps more properly, decelerate) ions along the same accelerating gap as the fundamental does, Blosser [20] noted that "**a phase dependent disturbance of the radial betatron oscillation can be excited,**" as was encountered during a Michigan State University design study of a similar system. This possibility would have to be checked with orbit simulation studies before a decision to proceed with this option was taken;

The accelerating voltage supported by a third harmonic cavity may not be very much higher than the multipactoring threshold, as is the case with the SIN flat-topping cavity. This could make it very difficult to maintain an appropriate dee voltage, as was initially the case at SIN.

The layout of the 590 MeV ring cyclotron at SIN is shown in fig. B.4. The sector magnets, fundamental RF cavities, and the third harmonic flat-topping cavity are identified. A flat-topping cavity that was proposed for TRIUMF is shown in fig. B.5. TRIUMF is not seriously considering the use of a separate cavity for flat-topping at the present time because the accelerating voltage would not be flat-topped in the central region and inner radii of the cyclotron so only some of the advantages of flat-topping would be achieved. Also, space in the region behind the radio frequency cavity is at a premium given the alternative extraction task force's plans to install magnetic channels, RF boosters, and RF deflectors in the same area [21].

B.3.2 Dee Within A Dee

The dee within a dee, as depicted in fig. B.6, was proposed by Rickey et al [17] for second harmonic flat-topping of the Indiana University 200 MeV cyclotron. It has most of the advantages of a separate cavity but few of the disadvantages, particularly in the TRIUMF case, but it introduces new problems of its own. It was briefly considered at TRIUMF but, as with IUCF, severe mechanical and electrical problems were anticipated and the concept was abandoned. In particular, support and alignment of the inner dee is not a trivial problem because of the mechanical complexity of such a large doubly cantilevered structure:

a. a mechanism for adjusting the vertical alignment of the cantilevered panel forming the inner dee

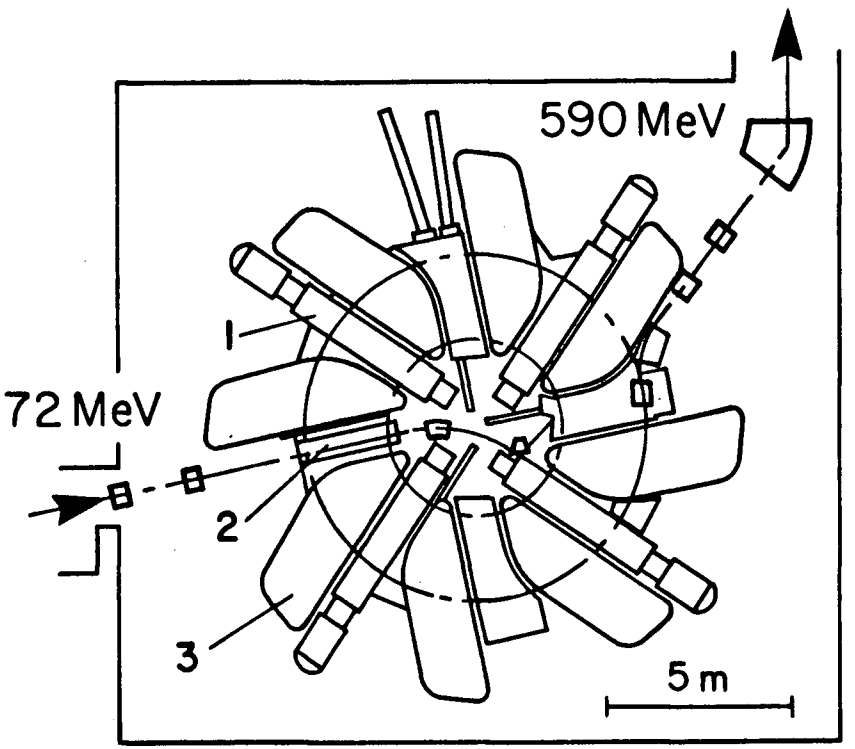

LAYOUT OF THE 590 MeV RING CYCLOTRON AT SIN

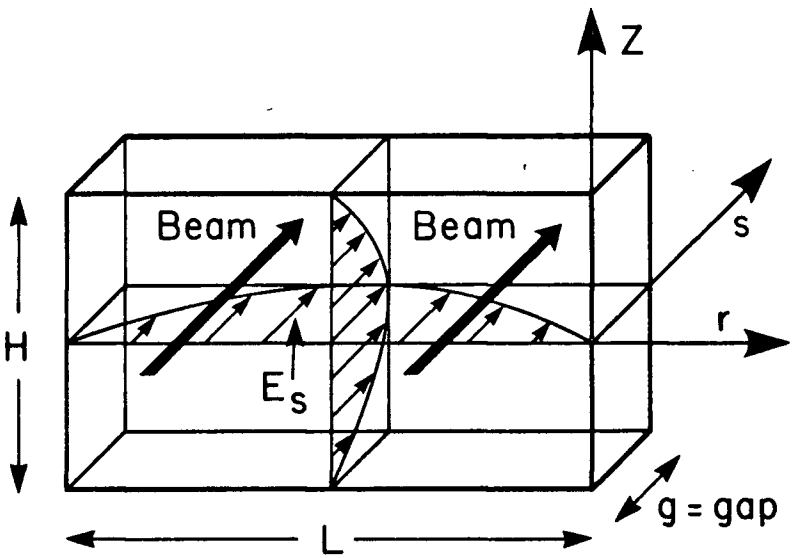

TE_{101} RF CAVITY

Key to Figure:

1 Fundamental RF Cavity (1 of 4)
2 Third Harmonic RF Cavity
3 Sector Magnet (1 of 8)

Net Energy Gain per Turn:
2 MeV

Fig. B.4 The Flat-topping System of the 590 MeV Ring Cyclotron at SIN

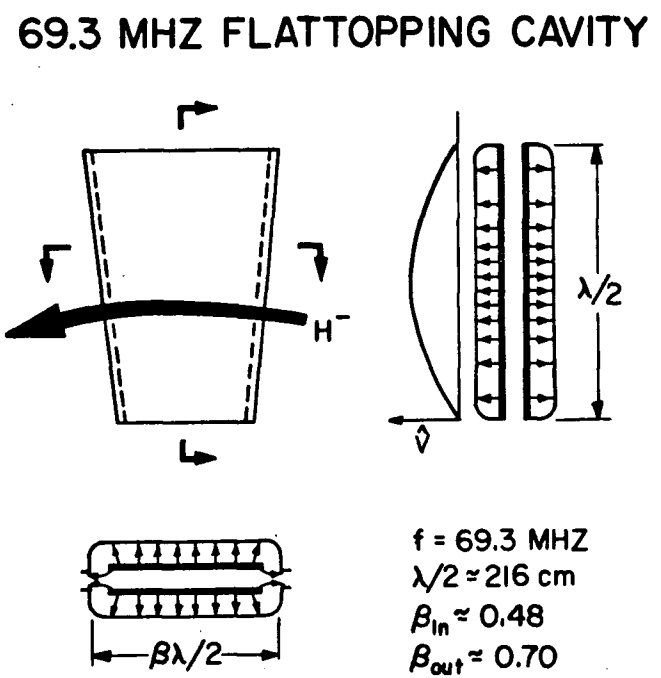

Cavity Dimensions

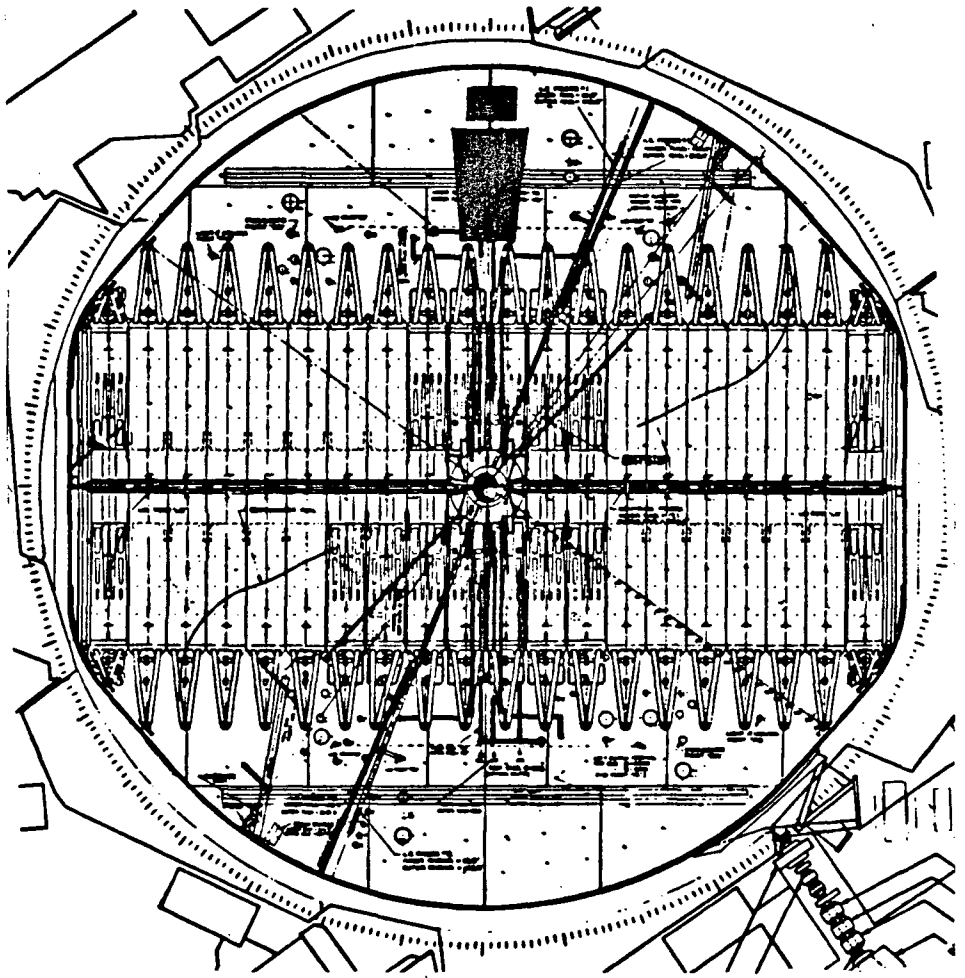

Installation in Cyclotron (next to proposed fifth harmonic booster cavity)

Fig. B.5 A Third Harmonic Flat-topping Cavity for the TRIUMF Cyclotron

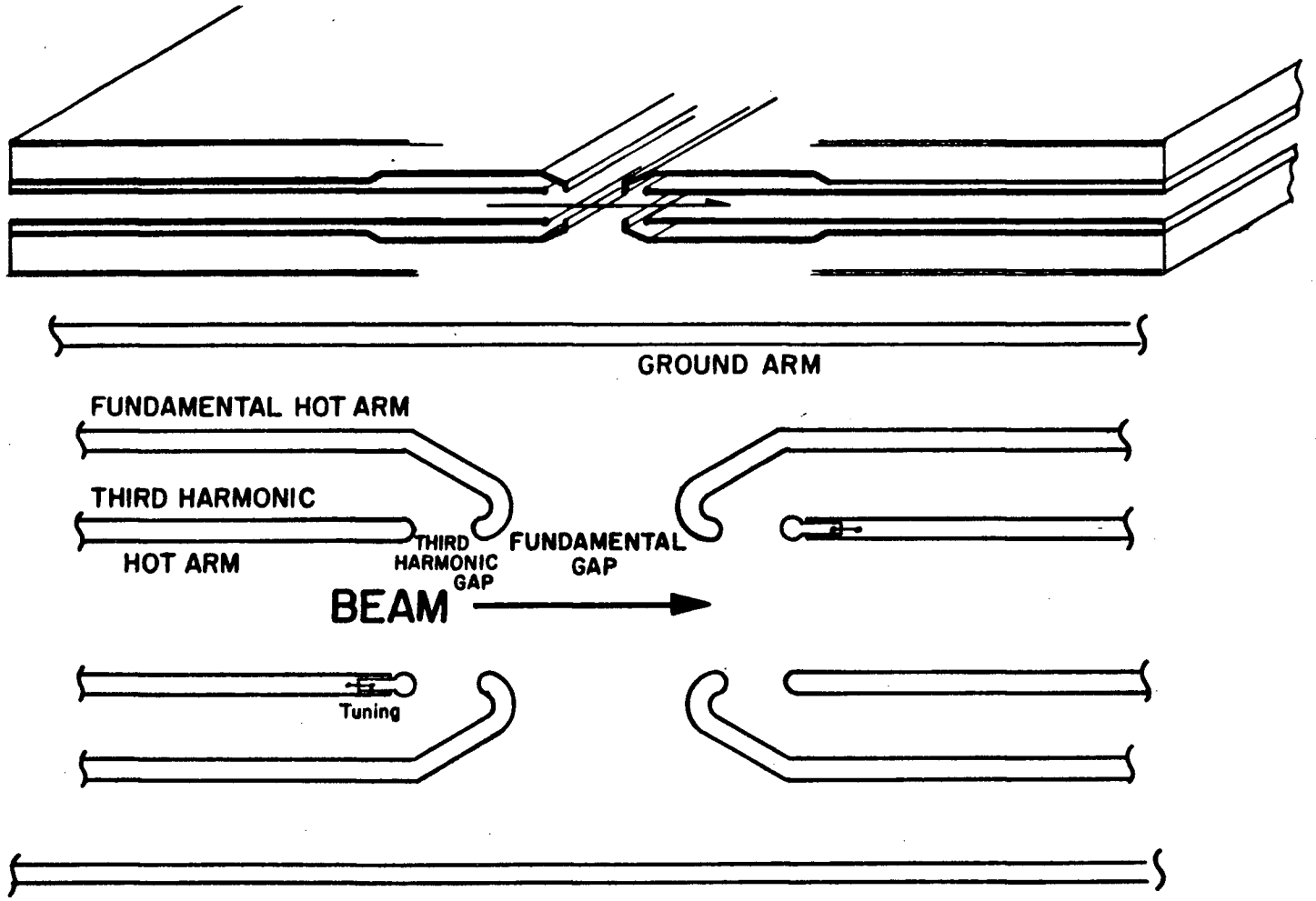

Fig. B.6 A Third Harmonic Dee within the Fundamental Dee

would be very complex;

b. the inner dee could not be easily observed from the cyclotron periscope during optical surveys;

c. insulators, which could be installed to make the structure rigid and robust, are too fragile and unreliable to be used as structural components;

The geometric complexity of the structure makes it difficult to predict undesirable interaction between a mode in a primary cavity and parasitic modes in the other two cavities; and,

Multipactoring could still cause some difficulty at third harmonic, as is the case for a physically separate cavity.

B.3.3 Harmonically Resonant Radio Frequency Cavity

Excitation of the third harmonic accelerating mode in the same cavity as the fundamental was proposed for TRIUMF by Erdman et al [19] in 1969 and has recently been investigated for use in other particle accelerators by Schriber [22] of Los Alamos National Laboratory and Hess, Schettman, and Smith [23] of Stanford University. The concept as realized in TRIUMF's RF cavity is shown schematically in fig. B.7. Note that the two modes are driven out of phase with respect to each other.

This concept is preferred by TRIUMF because:

a. it supports a flat-topped accelerating voltage along the entire accelerating gap;

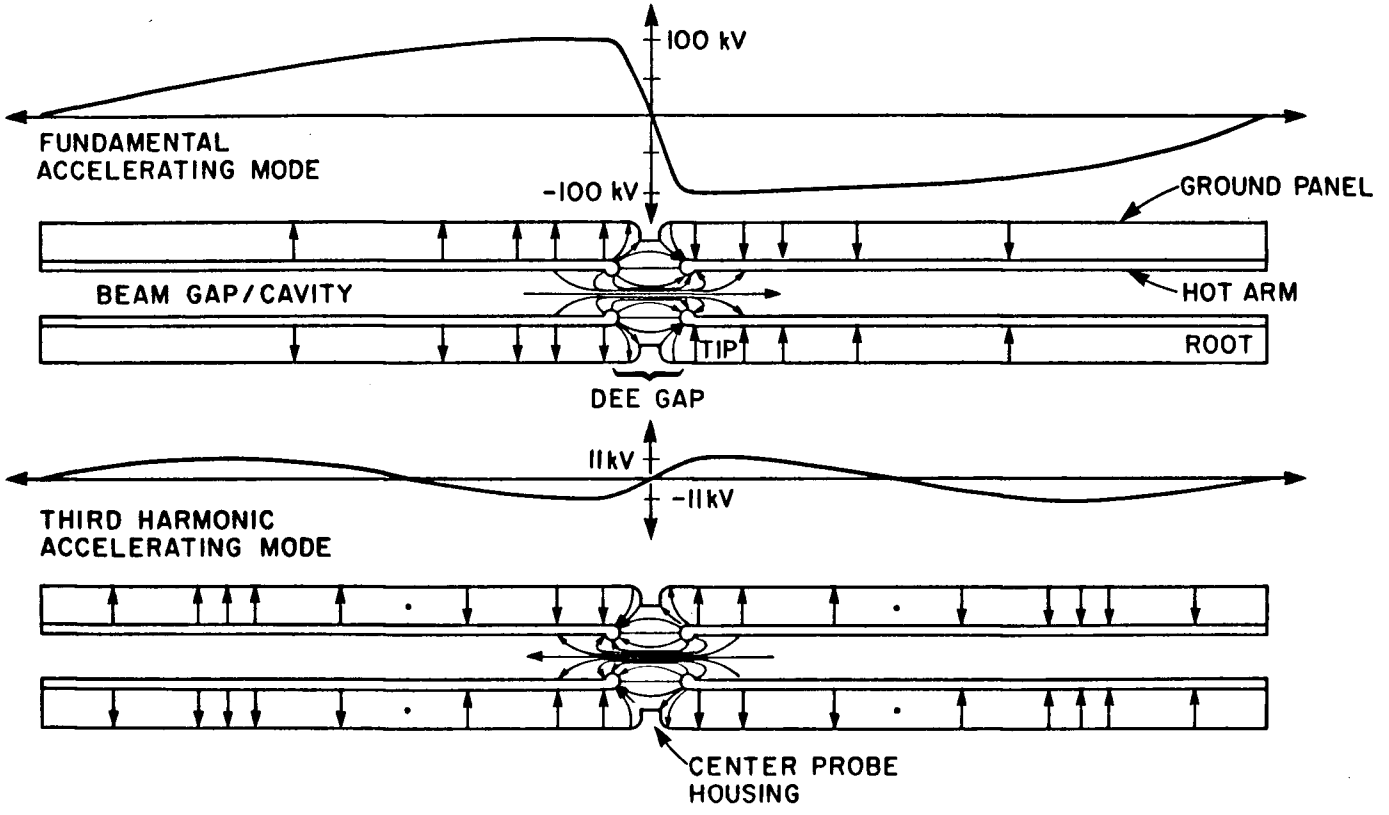

Fig. B.7 The Fundamental and Third Harmonic Accelerating Modes in TRIUMF's Radio Frequency Cavity

b. it makes efficient use of valuable space in the cyclotron; and,

c. it avoids the mechanical complexity of a supplementary dee within the primary dee.

Harmonically resonant cavities have several disadvantages, however:

a. Tuning mechanisms for fundamental and third harmonic often cannot be made totally independent;

b. The fundamental and third harmonic power amplifiers may not be electrically isolated from each other;

and, in the case of the TRIUMF cyclotron,

c. The third harmonic mode's voltage profile along the accelerating gap in the main RF cavity is very non-uniform;

d. The third harmonic mode in the main RF cavity is closely coupled to parasitic modes in the beam cavity; and,

e. Exciting the third harmonic mode in a $3\lambda/4$ cavity will require three times as much power as exciting an equivalent $\lambda/4$ cavity.

Tests described in greater detail in chapter three suggest that the presence of the fundamental mode with sufficient amplitude will effectively bias the cavity against multipactor discharges caused by the third harmonic mode. If this result is also found to apply to the TRIUMF cavity, the third harmonic start-up procedure will be

considerably simpler than the start-up procedure for the fundamental mode or for the third harmonic mode in a separate cavity.

B.4 RE-DESIGN OF THE RADIO FREQUENCY CAVITY

A 1:10 scale model of the cyclotron vacuum tank and radio frequency cavity was constructed in late 1982 for studies of the excitation (and suppression) of parasitic modes in the beam cavity. Initial results of the investigation were reported by Susini et al [24], Poirier et al [25], and Fong et al [26]. Recent work using the model has shown that the geometry of the central region and flux guides play a major role in determining both the voltage profile along the accelerating gap (fig. B.8) and the coupling of energy into parasitic modes supported by the beam gap/cavity (fig. B.9).

For the voltage profile along the accelerating gap to be uniform, the energy in the accelerating modes must propagate only in the direction perpendicular to the dee gap. This implies that all longitudinal sections of RF cavity, as illustrated in fig. B.7, must be one-dimensionally or longitudinally resonant at the same frequency. In the existing cyclotron RF cavity, the central region and flux guides are not longitudinally resonant at the same frequency as the rest of the RF cavity. As a result, energy in the cavity propagates parallel to, as well as perpendicular to, the dee gap. The voltage profile shown

in fig. B.8 shows the effect of the higher gap capacitance in the central region and lower gap capacitance in the flux guides: the dee voltage drops off towards the outer radii. The voltage drop off at third harmonic is especially pronounced and must be corrected.

As discussed earlier, minimizing the coupling of energy from the fundamental mode in the RF cavity to parasitic modes in the beam gap cavity has been one of the most difficult problems associated with RF system operation at TRIUMF. The basic geometry of the situation is shown in fig. B.9. Although misalignment of the hot arms has been found to be a major factor in determining the amount of energy coupled into the parasitic modes, it is also been found that coupling can be significantly reduced by covering the slots between resonator segments and the upper and lower flux guides. Typical parasitic mode field distributions in one quadrant of the beam gap cavity and a voltage profile of the mode, as measured at the point directly behind the root of the RF cavity, are shown in fig. B.9. The power coupled into the parasitic modes is not large - only a few thousand watts at most - but it causes serious problems in a region where it was not anticipated that any RF fields would exist. At best, the parasitic modes interfere greatly with beam diagnostic probes; at worst, they can cause severe structural damage to equipment in the beam gap and the resonator segments themselves.

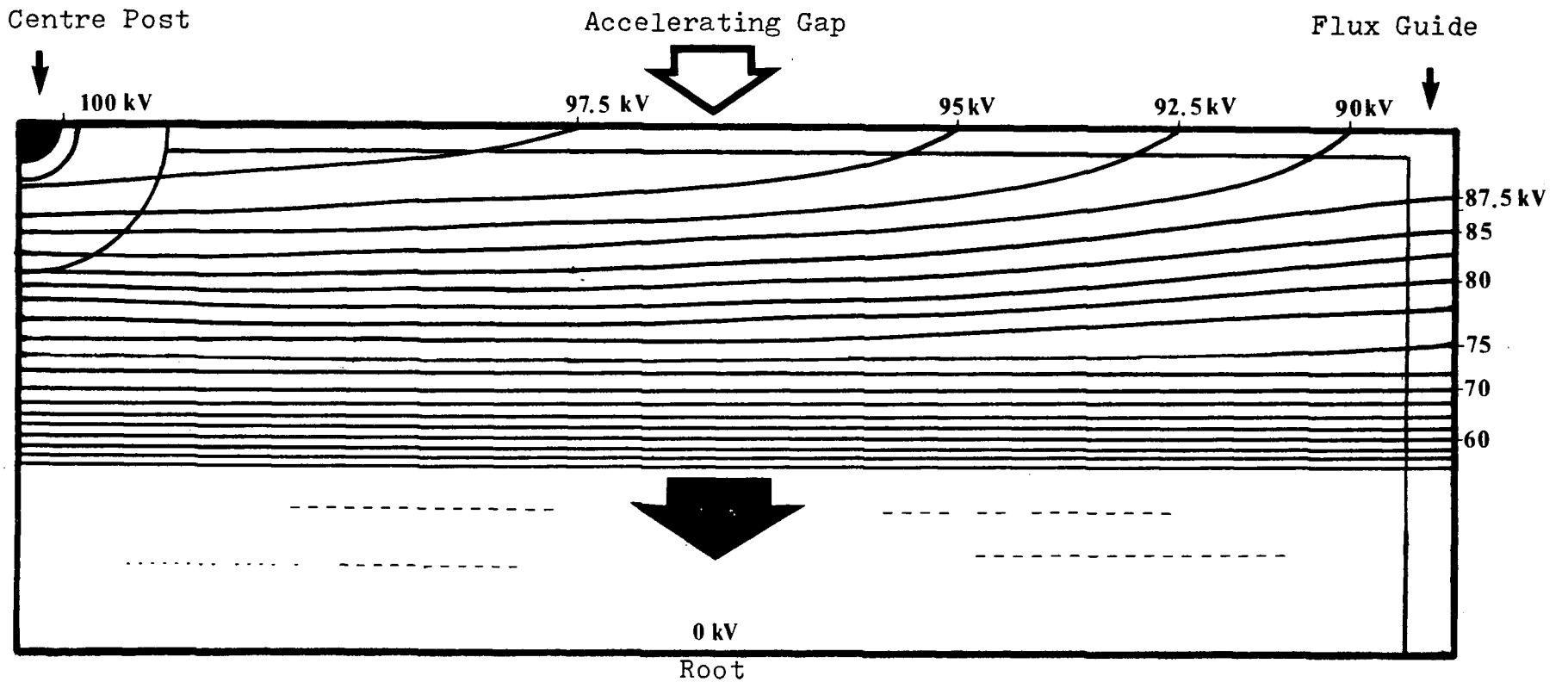

Fig. B.8 Voltage Profile along the Cyclotron Accelerating Gap

The LANL program SUPERFISH was used to generate this plot of lines of constant dee voltage in one octant of the TRIUMF radio frequency cavity. The centre post, accelerating gap, and flux guides are clearly visible. The SUPERFISH model, although crude , shows the drop in dee voltage towards the extraction radii.

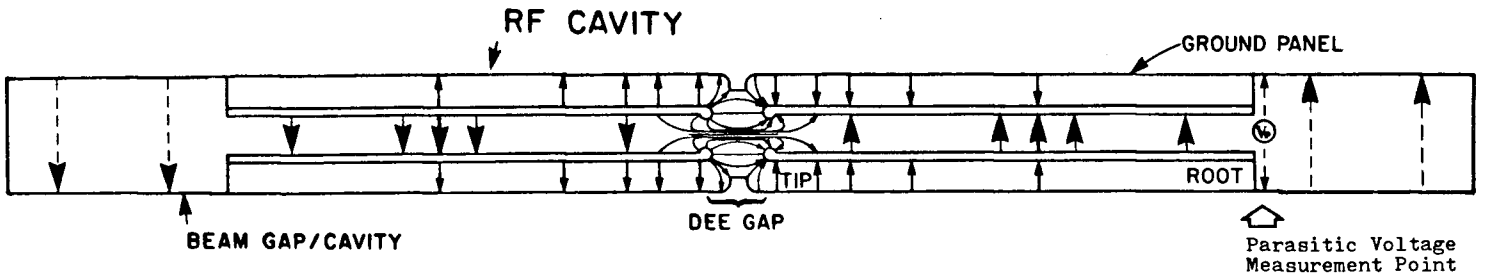

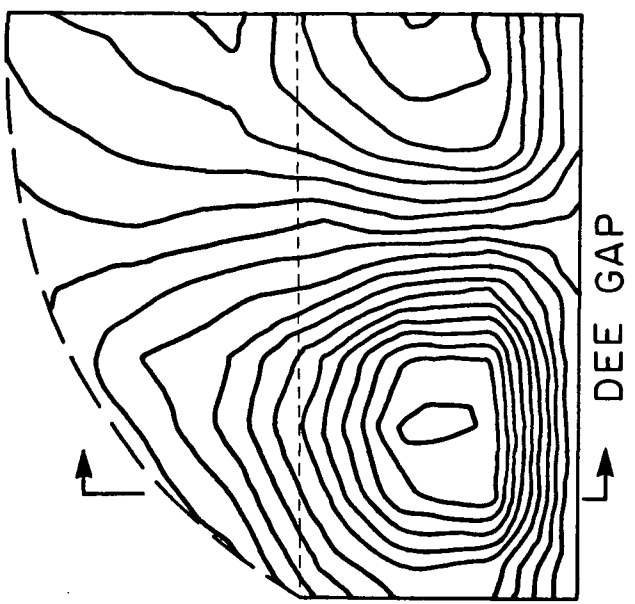

TYPICAL PARASITIC MODE FIELD DISTRIBUTION
One Quadrant

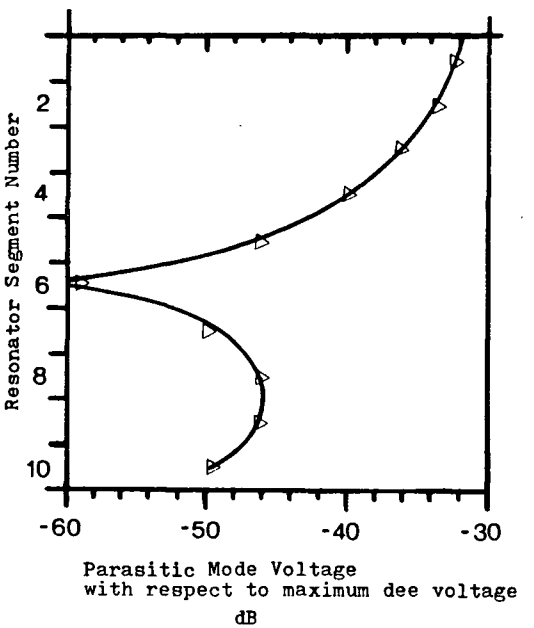

TYPICAL PARASITIC MODE VOLTAGE PROFILE
One Quadrant

Fig. B.9 Measurements of the Field Distribution in Parasitic Modes Excited in the Cyclotron Beam Gap

Although it has been demonstrated that proper alignment of the cantilevered panels greatly limits the amount of power that is coupled into the parasitic modes in the beam cavity, it would be desirable to have some sort of supplementary mechanism to help suppress the parasitic modes. Various schemes have been investigated during the past three years. Attempts to shift the frequency of the parasitic modes have been largely unsuccessful at reducing the coupling, as have attempts to dampen the modes with lossy RF surfaces. Although it has been shown that covering all the slots between cantilevered panel segments and the upper and lower fluxguides will substantially reduce the coupling, the cyclotron itself has not yet been modified because studies have not yet been completed. An active suppression scheme resembling neutralization that was proposed by Worsham [27] is also currently being investigated. Unfortunately, results obtained from model studies have not always been found to hold when applied to the cyclotron, particularly with respect to parasitic mode studies at the fundamental frequency. Studies of the third harmonic mode and its parasitics have also proven to be more challenging than expected.

B.5 SUMMARY OF THE TECHNICAL OBJECTIVES OF THE RADIO FREQUENCY SYSTEM UPGRADE

B.5.1 Radio Frequency Cavity

The redesign of the radio frequency cavity has, thus far, been principally concerned with improvement of the mechanical stability and alignment of the cantilevered

panels [28] to reduce cantilevered panel vibration and to reduce the power coupled to parasitic modes in the beam cavity.

The central region, flux guides, and cavity tuning mechanisms will be redesigned to permit automatic retuning of the RF cavity to the fundamental and third harmonic drive frequencies simultaneously over a specified range and to keep variations and asymmetries in the accelerating voltage profile below specified limits.

Finally, cavity coupling loops, transmission line filters, and matching sections for coupling fundamental and third harmonic radio frequency power into the cavity must be designed, constructed, and installed.

Design of the new RF cavity components will reflect the special problems associated with installation and alignment of hardware in the cyclotron vacuum tank, principally the need to restrict the exposure of technicians to the highly radioactive cyclotron interior. It is planned to remotely handle and install hardware wherever possible.

B.5.2 Radio Frequency Control System

It has been decided to replace the existing RF control system. The design of the new control system centers around four principal issues:

The new RF control system will have provision for controlling the third harmonic RF system was well as the fundamental RF system;

The new RF control system will have a more open architecture and be more accessibile for experimentation, development, and expansion than the existing system. The control program that manages the system start-up procedure will be implemented in software rather than hardware to be more flexible;

The major improvement in accelerating voltage stability that is necessary for single turn extraction requires very precise measurement of the amplitude and phase of the dee voltage. Measurement of the fundamental mode amplitude to within 80 parts per million and the relative phase between the fundamental and third harmonic modes to within 5 picoseconds (0.12 degrees at 69 MHz) will be difficult due to problems with temperature variations in components of the detector system; and,

Two major disturbances, hot arm (dee) vibration and pulsing of the beam at 1 kHz, limit the stability of the accelerating voltage in the radio frequency system's present configuration. Ideally, these disturbances will be greatly reduced at their sources as part of the radio frequency system upgrade, but it will probably be necessary to suppress their effects on the accelerating voltage by increasing the gain and bandwidth of the feedback compensation amplifiers. The existing compensation network does not adequately suppress these disturbances and must be replaced.

References:

[1] K.L. Erdman, R. Poirier, O.K. Fredriksson, J.F. Weldon, W.A. Grundman. "TRIUMF Amplifier and Resonator System." *Proc 6th Int Cyclotron Conf,* pp 451-458 (1972).

[2] K.L. Erdman, K.H. Brackhaus, R.H.M. Gummer. "Some Aspects of the Control and Stabilization of the RF Accelerating Voltage in the TRIUMF Cyclotron". *Proc 6th Int Cyclotron Conf,* pp 444-450 (1972).

[3] A. Prochazka. "The Design of the RF System for the TRIUMF Cyclotron." PhD Dissertation, University of British Columbia (1972).

[4] K.H. Brackhaus. "The Generation and Control of 1.5 Megawatts of RF Power for the TRIUMF Cyclotron." PhD Dissertation, University of British Columbia (1975).

[5] R. Poirier and M. Zach. "The TRIUMF RF System." *IEEE Trans* NS-22(3):1253-1256 (1975).

[6] R.H.M. Gummer. "Accelerating Voltage Control and Stabilization in the TRIUMF Cyclotron". *IEEE Trans* NS-22(3):1257-1260 (1975).

[7] R.H.M. Gummer, R.L. Poirier, and M. Zach. "TRIUMF RF System - Initial Operating Problems and Their Solutions." *Proc 7th Int Conf on Cyclotrons and their Applications,* pp 167-170 (1975).

[8] J. Riedel. "R.F. Systems." *IEEE Trans* NS-26(2):2133-2136 (April 1979).

[9] K.L. Erdman. "Special Aspects of Cyclotron RF Systems." *Proc 7th Int Conf on Cyclotrons and their Applications,* pp 141-145 (1975).

[10] C. Bieth. "Critical Features of RF Systems for Large Cyclotrons." *Proc 10th Int Conf on Cyclotrons and their Applications,* pp 294-298 (1984).

[11] B. Bischof. "The RF-System of the Flattop-Acceleration Structure in the SIN 590-MeV-Ring-Cyclotron." *IEEE Trans* NS-26(2):2186-2189 (April 1979).

[12] S. Adam, W. Joho, P. Lanz, H. Leber, N. Schmid, U. Schryber. "First Operation of a Flat-top Accelerating System in an Isochronous Cyclotron." *IEEE Trans* NS-28(3):2721-2723 (June 1981).

[13] E.W. Vogt and J.J. Burgerjon, ed. "TRIUMF Proposal and Cost Estimate." University of British Columbia (1966).

[14] TRIUMF Facility Development Plan. "RF Resonator Replacement Program." 12 July 1984.

[15] P.K. Sigg. "Improvements in the SIN-Injector RF System." *Nucl Inst Meth* 155:1-10 (1978).

[16] R.E. Laxdal. "Separate 3rd Harmonic Flattopping Cavity." TRIUMF Memorandum dated 15 August 1984.

[17] M.E. Rickey, M.B. Sampson, and B.M. Bardin. "General Design Features of the Indiana University 200 MeV Cyclotron." *IEEE Trans* NS-16(3):397-404 (December 1968).

[18] C. Bieth, A. Joubert, G. Rastoix, and J. Riedel. "The Ganil Accelerating System." *Proc 7th Int Conf on Cyclotrons and their Applications*, pp 163-166 (1975).

[19] K.L. Erdman, A. Prochazka, O.K. Fredriksson, R. Thomas, and W.A. Grundman. "A Square-Wave RF System Design for TRIUMF." *Proc 5th Int Cyclotron Conf*, pp 105-110 (1969).

[20] H.G. Blosser. "Future Cyclotrons." *Proc 6th Int Cyclotron Conf*, pp 16-32 (1972).

[21] M. Zach, G. Dutto, R.E. Laxdal, G.H. Mackenzie, J.R. Richardson, R. Trelle, R.E. Worsham. "The H- High Intensity Beam Extraction System for TRIUMF." *IEEE Trans* NS-32(5):3042-3044 (October 1985).

[22] S.O. Schriber. "Room Temperature Cavities for High-Beta Accelerating Structures." *Proc Conf on the Future Possibilities for Electron Accelerators*, Charlottesville, VA (1979).

[23] C.E. Hess, H.A. Schwettman, and T.I. Smith. "Harmonically Resonant Cavities for High Brightness Beams." *IEEE Trans* NS-32(5):2924-2926 (October 1985).

[24] A. Susini, D. Dohan, T. Enegren, K. Fong, V. Pacak, R. Poirier. "An Investigation of RF Problems at TRIUMF." TRIUMF Design Note TRI-DN-82-27 (December 1982).

[25] R. Poirier, D. Dohan, G. Dutto, T.A. Enegren, K. Fong, and V. Pacak. "Determination of the RF Leakage Field in the Vacuum Tank of the TRIUMF Cyclotron." *IEEE Trans* NS-30(4):3514-3516 (August 1983).

[26] K. Fong, D.A. Dohan, V. Pacak, R. Hutcheon. "Model Study on the Reduction of RF Leakage in the TRIUMF Cyclotron." *IEEE Trans* NS-32(5):2939-2942 (October 1985).

[27] R.E. Worsham, TRIUMF. Private comunication (1985).

[28] G. Stanford, R. Worsham, K. Fong, and S. Hutton. "A New and Improved RF Resonator Segment for the TRIUMF Cyclotron." *IEEE Trans* NS-32(5):2942-2944 (October 1985).

APPENDIX C

CALCULATION AND MEASUREMENT OF THE PROPERTIES OF ACCELERATOR RF CAVITIES

C.1 INTRODUCTION

This appendix serves as a brief survey of the tools used by RF engineers to calculate and measure the properties of accelerator RF cavities. Problems associated with the mechanical construction of cavities and driving them with high power while under vacuum are discussed in Appendix D.

C.2 DESIGN OF THE RF CAVITY

Analytical Methods

The properties of the normal modes in electromagnetic resonant cavities have been studied extensively since the Second World War. Analytical methods in RF cavity design are well known and have been described by Slater [1], Harrington [2], Johnson [3], and many others. Most accelerator RF cavities are derived from the classical "short-gap" coaxial cavity as described by Mavrogenes and Gallagher [4]. There are obvious exceptions, however, such as the loaded circular waveguide used in the Stanford Linear Accelerator and the TE_{101} RF cavities used in the 590 MeV ring cyclotron at SIN.

Computer Aided Design

The last twenty years have seen rapid development of

computer aided design tools to assist in the design of accelerator RF cavities. MESSYMESH (see ref 1 in [13]), announced in 1961, and LALA [5], announced in 1966, were among the first of the so-called "Helmholtz solvers" used to calculate the resonant frequency and field distribution of axisymmetric RF cavities with simplified geometries. SUPERFISH [6], announced in 1976, is perhaps the best known and the most popular Helmholtz solver used in accelerator RF engineering. SUPERFISH uses finite element methods to analyze axisymmetric RF cavities or guided wave structures with constant cross-section. It calculates the frequencies of the dominant and some higher order modes, RF electric and magnetic field distribution, and the quality factor and shunt impedance of the cavity. Other programs of a similar nature have been described in the literature but are not as widely used. A number of enhancements and post-processors have been developed for SUPERFISH during the past ten years [7] -[11] including ULTRAFISH [8], a generalization of SUPERFISH that solves for resonant modes with azimuthal variations, and a post processor for SUPERFISH called MARC [10] that calculates the temperature distribution and dimensional changes in linac RF structures. Both steady state and transient behaviour can be examined with the computer model.

Despite their wide acceptance, SUPERFISH and similar programs sometimes discourage users because they fail to converge or to give correct answers and because the

documentation that accompanies them is often incomplete. Nevertheless, in the hands of experienced users they can yield useful results and reduce the need for the construction of relatively expensive prototypes and scale models.

Weiland [13] recently reviewed the current state of computer modelling of two- and three-dimensional cavities. He noted that although the modelling of two-dimensional and cylindrically symmetric structures has achieved a certain maturity in recent years, three dimensional codes are still in their infancy and are not yet reliable enough for routine use by non-experts. Great progress is being made; Weilland expects that "**provided that computer size and speed continues to increase, these 3D-codes will also be a common tool soon.**"

Experimental Methods

It is often necessary to experimentally determine the field distribution in an RF cavity, especially if the cavity has an unusual or complex geometry. A loop or probe can be used to sample the field near the walls of the cavity. If the field does not vary in the direction perpendicular to the cavity wall, as in the case of both the accelerating and the parasitic modes in TRIUMF (see Appendix B), then such loops and probes can give an accurate picture of the field distribution in the cavity. In cavities with complex geometries, the field distribution can be mapped by measuring the shift in the cavity's resonant frequency as a

dielectric bead is pulled through it, as described by Maier and Slater [14]. The availability of inexpensive microcomputers has made it possible to automate the technique at reasonable cost. Automated bead pullers have recently been described by Hepburn and Michel [15] and Bernier, Sphicopoulos, and Gardiol [16].

C.3 CALCULATION AND MEASUREMENT OF THE PROPERTIES OF THE CAVITY COUPLING NETWORK

When designing the RF coupling network, the relatively complex field theory description of the cavity can be replaced by an equivalent circuit model, as described by Beringer [17]. The theory of cavity coupling mechanisms as presented by Harrington [2] and Johnson [3] is well known; more practical considerations specific to accelerator RF cavities were recently presented by Botha and Van der Merwe [18].

Experimental techniques for measuring the parameters of the equivalent circuit of the cavity and its coupling mechanisms were described by Ginzton [19] in the late 1950's. In recent years the RF network analyzer [20] [21] has replaced the slotted line used by Ginzton and has made the measurement of microwave networks much faster and more accurate than ever before. The measurement techniques employed when using network analyzers to characterize general networks are well known [22]. Kajfez and Hwan [23] recently described an updated version of Ginzton's method for measuring the quality and coupling factors of coupled

cavities using a network analyzer. There has been much interest in developing error models and calibration procedures to make network analyzer measurements as accurate as possible. Representative work has been described by Fitzpatrick [24] [25].

References:

[1] J.C. Slater. "Microwave Electronics." Princeton, NJ: D. Van Nostrand Co. Inc. (1950).

[2] R.F. Harrington. "Time-Harmonic Electromagnetic Fields." New York: McGraw-Hill Book Co., pp 381-446 (1961).

[3] C.C. Johnson. "Field and Wave Electrodynamics." New York: McGraw-Hill Book Co., pp 213-243 (1965).

[4] G. Mavrogenes and W.J. Gallagher. "Coaxial Cavities with Beam Interaction." *IEEE Trans* NS-32(5):2778-2780 (October 1985).

[5] H.C. Hoyt, D.D. Simmonds, and W.F. Rich. "Computer Designed 805 MHz Proton Linac Cavities." *Rev Sci Instr* 37(6):755-762 (June 1966).

[6] K. Halbach and R.F. Holsinger. "Superfish - A Computer Program for Evaluation of RF Cavities with Cylindrical Symmetry." *Particle Accelerators* 7:213-222 (July 1976).

[7] D.W. Reid, A. Harvey, G.W. Rodenz, and R.F. Holsinger. "Superfish." *Proc 1981 Linac Conf,* pp 99-102 (1981).

[8] R.L. Gluckstern, R.F. Holsinger, K. Halbach, G.N. Minerbo. "Ultrafish - Generalization of Superfish to m $\geq$ 1." *Proc 1981 Linac Conf,* pp 102-107 (1981).

[9] S.O. Schriber and R.F. Holsinger. "Additions and Improvements to the RF Cavity Code Superfish." *Proc 1983 Linac Conf* (1983).

[10] J. McKeown and J.-P. Labrie. "Heat Transfer, Thermal Stress Analysis, and the Dynamic Behaviour of High Power RF Structures." *Proc 1983 Linac Conf* (1983).

[11] "Poisson Group Programs User's Guide." Los Alamos National Laboratory (14 Feb 1981).

[12] J.L. Warren, G.P. Boicourt, M.T. Menzel, G.W. Rodenz, and M.C. Vasquez. "Revision of and Documentation for the Standard Version of the Poisson Group Codes." *IEEE Trans* NS-32(5):2870-2872 (October 1985).

[13] T. Weiland, "Computer Modelling of Two- and Three-Dimensional Cavities." *IEEE Trans* NS-32(5):2738-2742 (October 1985).

[14] L.C. Maier and J.C. Slater. "Determination of Field Strength in a Linear Accelerator Cavity." *J Appl Phys* 23:78-83 (January 1952).

[15] J.D. Hepburn and W.L. Michel. "A Microprocessor-Controlled Bead Puller For RF Cavity Measurements." *Proc 1981 Linac Conf,* pp 56-58 (1981).

[16] L.G. Bernier, T. Sphicopoulos, and F.E. Gardiol. "An Automatic System for the Measurement of the Field Distribution in Resonant Cavities." *IEEE Trans* IM-32:462-466 (1983).

[17] R. Beringer. "Resonant Cavities as Microwave Circuit Elements," in *Principles of Microwave Circuits,* C.G. Montgomery, R.H. Dicke, and E.M. Purcell, ed. New York: McGraw-Hill Book Co. pp 207-239 (1948).
(October 1985).

[18] A.H. Botha and F.S. Van der Merwe. "Design of Circuits for Coupling Power Amplifiers to Resonators." *IEEE Trans* NS-26(3):3962-3964 (1979).

[19] E.L. Ginzton. "Microwave Measurements." New York: McGraw-Hill Book Co. Inc., pp 391-461 (1957).

[20] M.A. Maury, Jr. "Automated Network Analyzer Microwave Measurements Past, Present & Future." *Microwave J* 25(4):18-28 (April 1982).

[21] J. Fitzpatrick. "A History of Automatic Microwave Network Analyzers." *Microwave J* 25(4):43-56 (April 1982).

[22] "HP 8505A RF Network Analyzer Basic Measurements." Hewlett Packard Application Note 219. Palo Alto: Hewlett-Packard Co. (1978).

[23] D. Kajfez and E.J. Hwan. "Q-Factor Measurement with Network Analyzer." *IEEE Trans* MTT-32(7):666-670 (July 1984).

[24] J. Fitzpatrick. "Error Models for Systems Measurement." *Microwave J* 21(5):63-66 (May 1978).

[25] J. Fitzpatrick. "Automatic Network Analyzer Accuracy: How to Get It, Lose It, Then Regain It." *Microwave Systems News* (5):77-93 (May 1980).

APPENDIX D

OBSTACLES TO SUCCESSFUL EXCITATION OF ACCELERATOR RF CAVITIES

"The 37 inch cyclotron which ran just before the 2nd World War was the first machine with a fairly large r.f. structure. Initially the engineering was done by people with expertise in high power broadcast transmitters, employing the standard methods used to feed antennas. However, it soon became apparent that a high energy storage, high Q dee which frequently sparked did not look like an antenna load, and different methods had to be found to drive it. So, very quickly a nuclear physicist (K. Mackenzie) had to learn how to be a cyclotron r.f. engineer." [1]

D.1 INTRODUCTION

It has been recognized for some time that the unusual load characteristics of an evacuated resonant cavity complicate the design and operation of accelerator radio frequency systems. Several phenomena that alter the quality factor and resonant frequency of an accelerator cavity during RF system operation are described in this appendix.

Other problems that affect RF system performance, such as mechanical vibration of the accelerating electrodes [2] [3], are not discussed here although they are ultimately very important considerations, especially in the case of TRIUMF.

Problems Associated With Source/Load Mismatch

Normally, every effort is made to ensure that the input impedance of the accelerating cavity is matched to output impedance of the transmitter and transmission line

that drive it. In practice, however, an accelerating cavity often presents a highly variable load to the transmitter. Before discussing the causes of such variations, the problems that are encountered when a high power transmitter is driven into a poorly matched load will be described. They include:

a. the transmitter may not be able to supply enough power to maintain the desired accelerating voltage if the cavity's resonant frequency drifts too far from the driving frequency;

b. the final tetrode or triode could be damaged by dissipation of excessive power reflected back from the load [4];

c. breakdown and sparking could occur:

   i. at the peaks of the voltage standing wave in the transmission line; or,

   ii. in one of the several capacitors in the anode circuit;

d. the phase and amplitude response of the transmitter may be severely affected by the change in the load [5].

Provided sufficient fault protection is built into the transmitter, the limited output capability of the transmitter is of far greater concern than the possibility of damage to the tube when attempting to drive an accelerating cavity that hasn't been tuned to the driving frequency. At best, the system will be unable to excite the

desired accelerating potential; at worst, the transmitter will be overdriven and will be shut down by the appropriate safety interlock or circuit breaker.

Although power grid tubes are designed to stand considerable abuse, excess anode dissipation will damage the tube if it occurs long enough to overheat the envelope and seal structure. The control and screen grids in power grid tubes are less rugged than the anode, however, and must be protected by appropriate hardware interlocks. The maximum power that each grid can dissipate is indicated on the tube's data sheet and should not be exceeded for time intervals greater than one second [4]. Sparking, the other problem particularly associated with high levels of reflected power, can generally be avoided by selection of appropriately rated components and transmission lines.

The accelerating cavity presents a highly variable load to a driving amplifier because the cavity is a resonant structure with a fairly narrow bandwidth. Its input impedance, Z_{in}, is given by:

$$Z_{in}(\omega) = jX_e + \frac{R_o}{1 + j\,Q_o\left(\frac{\omega}{\omega_0} - \frac{\omega_0}{\omega}\right)} \qquad (D.1)$$

using the standard Foster model of a loop coupled cavity as described in chapter three.

The input impedance of the cavity is a function of:

a. the ratio of the cavity's resonant frequency to the frequency of the signal driving it; and,

b. the cavity loading, which determines the shunt resistance and quality factor of the cavity.

Many factors can cause changes in the accelerating cavity's geometry and loading and thereby change its resonant frequency, its quality factor, and its input impedance, including:

a. thermal expansion and contraction of the cavity structure, which will greatly affect the cavity's resonant frequency;

b. electrical discharge phenomena such as sparking which will lower the cavity's quality factor and which may also slightly detune the cavity; and,

c. external loading of the cavity, which in the case of an accelerating cavity is mostly due to the energy passed to, or taken from, the ion beam being accelerated.

These problems occur, to varying degrees, in all large and mechanically complex cavities that are excited with high power for use in scientific or industrial applications. There is, however, one particularly difficult problem that is peculiar to radio frequency cavities operating in vacuum:

d. **multipactoring**, referred to as "ion-lock" in some early reports, a mechanism by which gases at very low pressure break down when subjected to high

frequency electric fields of much smaller magnitude than are normally associated with sparking and more conventional discharge phenomena.

In a radio frequency cavity which is under vacuum, multipactoring sets a **lower** limit to:

a. the accelerating voltage that can be reliably maintained; and,

b. the rate at which the accelerating voltage must increase while it is passing through the multipactoring region if no special multipactoring suppression mechanisms are built into the cavity.

Once the characteristics of multipactoring in a particular cavity are understood, it can usually be:

a. **avoided** with special operating procedures, e.g. pulsing the accelerating voltage through the multipactoring region to a sustainable level; or, if necessary,

b. **suppressed** at certain power levels by modifying either the cavity's geometry or its surfaces.

In severe cases, however, such as when multipactoring problems were encountered during the development of the SIN ring cyclotron's third harmonic flat-topping cavity [6], multipactoring can be a stubborn obstacle to successful operation.

D.2 EXCITATION OF AN ACCELERATOR RF CAVITY IN AIR

Exciting a typical accelerator RF cavity with low power levels in air demands application of only the most elementary concepts of cavity tuning, coupling and load matching.

Driving the accelerating potential to near the maximum value allowed by the breakdown strength of air (approximately 30 kilovolts per centimetre) is easily accomplished provided that consideration is given to:

a. the change in the resonant frequency of the cavity as RF surface currents heat the cavity and cause it to expand; and,

b. preventing damage to the RF cavity and the RF power amplifier in the event a spark develops in the RF cavity or in the transmission line feeding it.

Temperature Effects

The most important consideration in the mechanical design of an accelerating cavity is heat evacuation. In the absence of a cooling system, an RF cavity under vacuum can only lose heat through radiation because:

a. convection cooling cannot occur; and,

b. in a vacuum, there is virtually no conduction of heat between two surfaces in contact if they are of ordinary roughness.

Because heat evacuation by radiation is very inefficient, a cooling system must be incorporated into the resonator design. Water is normally used as the working fluid. To evacuate W watts of RF power, F litres/second of water flow is required, given a desired temperature differential between the output and input of ΔT Celcius:

$$F = W \Delta T / 4186 \qquad (D.2)$$

$$\text{or,} \quad \Delta T = W F / 4186 \qquad (D.3)$$

For example, to maintain a five degree difference between the RF systems test facility cavity cooling water inlet and return while the cavity is being excited at full power (40 kilowatts), almost 120 litres of cooling water must pass through the cavity every minute. In the cyclotron, the cooling water requirement jumps to almost 4600 litres/minute due to its greater size and greater power dissipation.

As the RF drive power increases, the temperature of the cavity will increase. This will generally lower the cavity's resonant frequency.

A homogeneous cavity made of one kind of metal will have a thermal tuning coefficient proportional to the linear coefficient of expansion of the metal because the resonant frequency f of the cavity is approximately inversely proportional to the linear dimensions of the cavity [7].

$$\lambda_0 \propto l \qquad (D.4)$$

$$d\lambda_0/dT \simeq dl/dT = \alpha \qquad (D.5)$$

$$df/f \simeq - \alpha f \, dT \qquad (D.6)$$

In a re-entrant cavity, the change in gap capacitance that accompanies the thermal expansion of the central conductor dominates the thermal tuning coefficient if the outer conductor is rigidly attached to an external structure such as the cyclotron vacuum tank.

$$\Delta C_{gap}/C_{gap} \simeq \Delta l/d \qquad (D.7)$$

where: C_{gap} is the capacitance of the short gap

l is the length of the inner conductor

d is the length of the gap

The resonant frequency of the cavity is an eigenvalue of the transcendental equation:

$$Z_o \tan(\omega l/c) = 1/\omega C_{gap} \qquad (D.8)$$

where: ω is the resonant frequency

Z_o is the characteristic impedance of the dee stem

After calculating the total differential and making some substitutions, it has been shown [8] that as a first order approximation,

$$\Delta f/f - \Delta l/l \qquad (D.9)$$

$$\Delta f/f - \alpha \Delta T \qquad (D.10)$$

Many accelerator RF cavities, including the NSLS accelerating cavities at Brookhaven [9] and the Tevatron accelerating cavities at Fermilab [10], are automatically tuned (at least in part) by varying the temperature of the cavity cooling water.

TABLE VIII

Linear Coefficient of Expansion of Various Metals

Metal	Linear Coefficient of Expansion, α (per degree Celcius at 20 C)
Copper	16.7×10^{-6}
Mild Steel	$10.5 - 11.6 \times 10^{-6}$
Invar	0.9×10^{-6}
Aluminum	25.5×10^{-6}

Sparking

Kilpatrick [11] has described a spark as:

"an occurrence in time at which there is a spontaneous, abrupt, and complete (to first order) dissipation of electrically stored energy for a given voltage across a gap between metal electrodes."

Although a spark might quench itself almost immediately, it can develop extremely rapidly into an arc, fed by copious emission of electrons from the cathode metal. If the current flow in the arc is sufficiently high, local heating of the electrodes in the vicinity of the arc can result in vaporization of metal from the electrodes and damage to the structure.

A spark can slightly detune the cavity but its major effect is to spoil the cavity's quality factor. Thus, when

a spark occurs, a power amplifier that was critically coupled to the RF cavity during normal operation is suddenly tremendously under coupled to the cavity, i.e. the real part of the input impedance of the cavity is far lower than the characteristic impedance of the transmission line feeding it. As a result, large amounts of power are reflected back to the power amplifier rather than supporting the mode, an obviously undesirable situation.

If a spark occurs when the accelerator cavity is excited in air, it is most easily detected by the sudden jump in power being reflected back to the transmitter. The usual procedure is to monitor the reflected power and simply shut down the RF drive momentarily if sparking becomes excessive or the reflected power exceeds a specified limit.

In general, however, few sparks or difficulties are encountered when an RF accelerating cavity is driven with moderates amount of power in air.

D.3 EXCITATION OF AN ACCELERATOR RF CAVITY UNDER VACUUM

Vacuum Breakdown

Although the exact mechanism of breakdown in vacuum is not well understood, several phenomena which can lead to breakdown, including cathode field emission and steady cathode emission currents, have been identified [12]. Operational experience has shown that when the dee voltage is kept above a minimum level, sparking occurs very infrequently in the TRIUMF RF cavity as predicted by

application of Kilpatrick's criterion [11] to the TRIUMF geometry. Peter et al [13] recently showed that Kilpatrick's criterion is usually too conservative so the safety margin is far greater than was originally assumed.

Experience has also shown that system start-up under vacuum, i.e. raising the dee voltage from zero to above the previously mentioned "minimum level", is much more difficult than system start-up in air.

Following exposure to air, the surfaces of the RF cavity are heavily contaminated by water adsorbed from the air and oil from various sources. Although much of the contamination is spontaneously released when the cavity is pumped down to vacuum, some contaminants remain. When RF power is initially applied to the cavity, the surface currents heat the cavity, releasing some contaminants. They lower the breakdown threshold of the gap, which results in a spark. As the accelerating potential is raised, and the cavity heats up, more contaminants are released and more sparking occurs until the bulk of the contaminants have been released and normal operation can begin. This process is referred to either as cavity surface conditioning or cavity surface processing.

A spark is usually extremely faint unless it is causing damage to the cavity, i.e. it has become a destructive arc. Although sparks can often be seen by a careful observer, sudden upward jumps in the vacuum pressure or the reflected

power, or sudden downward jumps in the accelerating voltage are more reliable indications that contaminants are being released and discharges are occurring. On detection of a spark, the RF control system removes the RF drive signal from the power amplifier. After a short interval, i.e. long enough to pump the offending contaminants from the cavity, the RF drive is reapplied. If the interval is far shorter than the RF cavity's thermal time constant, then full power can be reapplied immediately without concern for thermal drift of the cavity's resonant frequency. Sparking may reoccur immediately after power is reapplied to the cavity. Depending on the nature and size of the gas release, it may take several such cycles of excitation and pumping to restore normal operation.

Sparking will occur more frequently during system start-up in a cavity under vacuum than it does in air but this does not significantly complicate the procedure for driving a cavity under vacuum. Spark detection and recovery are usually automated to simplify system operation, as described in section 4.2 of chapter four.

Multipactoring, on the other hand, does significantly complicate the procedure for exciting an accelerator cavity under vacuum. In contrast to breakdown phenomena, which set an **upper** limit to the accelerating voltage that can be reliably maintained in the cavity, multipactoring sets a **lower** limit to the accelerating voltage that can be reliably maintained in the cavity.

D.4 MULTIPACTORING

Multipactoring, or multiple impact secondary electron emission, is a discharge phenomenon peculiar to radio frequency systems operating in a vacuum. Unlike sparking, which is the result of an exponential multiplication of free electrons induced by the field which is subsequently enhanced by thermal emission from cathode surfaces, multipactoring is a resonant phenomenon in which free electrons are generated by a variety of sources - perhaps ionization of residual gas or field emission - and accelerated toward a surface where they cause emission of secondary electrons on impact. Multipactoring can occur if:

a. the mean free path of electrons is longer than the gap between the two surfaces, i.e. the vacuum is sufficiently good; and,

b. the dimensions of the gap and the voltage and frequency of the applied field are such that an electron emitted by one surface will:

   i. accelerate towards the opposite surface, traversing the gap in an odd multiple of one-half an RF period;

   ii. strike the opposite surface with sufficient energy to eject secondary electrons which will, in turn, accelerate back towards the first surface, repeating the cycle;

This cycle is described as classical or "two-point" multipactoring. In some radio frequency cavities, an anomolous form of multipactoring [29] referred to as "one-

point" or "reflex" multipactoring can occur. In this case, an electron traces a complex and non-conservative path through the cavity in such a way that it returns to its point of origin with sufficient velocity to cause secondary emission and satisy the condition for periodicity.

A multipactor discharge consists of a thin electron cloud which is driven back and forth across the gap in response to the applied RF voltage. As in the case of sparking, multipactoring spoils the quality factor of the cavity. This decouples the cavity from the power amplifier and transmission line, resulting in excessive reflected power. Once multipactoring becomes established, an increase in the RF power applied to the cavity will only result in more reflected power. The accelerating voltage will increase only marginally.

Multipactoring in radio frequency cavities frequently exhibits unexpected and unpredictable behaviour. In some cases, multipactoring appears to "burn itself out" after several hours of constant RF drive, a phenomenon which is often accompanied by an iridescent colouring of the cavity walls. At TRIUMF, however, multipactoring is avoided by pulsing on the RF power fast enough to drive the accelerating voltage through the multipactoring range before a multipactor discharge loads down the resonant mode. In general, it becomes easier to pulse through multipactoring as the quality of the vacuum improves.

Historical Summary

Multipactoring was first recognized by Philo T. Farnsworth [14] in 1929. This was followed by investigations of multipactoring between the plates of a condensor (capacitor) by Gill and von Engel [15], Lax et al [16], and Hatch and Williams [17]. By the late 1950's, multipactoring was reasonably well understood although much of the fine detail remained (and remains) to be worked out. Harmon [18] presented a brief review of the multipactoring mechanism, as developed by several authors, in a single framework.

In the microwave field, a number of devices based on the multipactor effect were proposed, including a multipactor TR box described by Forrer and Milazzo [19], a high level microwave rectifier proposed by Keenan [20], an L-band electron gun proposed by Gallagher [21], and a multipactoring electron gun for high duty linacs described by Liska [22].

In both the accelerator and the high power microwave tube field, however, most efforts were directed toward the development of means for the prevention and suppression of multipactoring, especially in accelerator cavities. Hatch [23] presented a comprehensive review (1962) of both the theory of multipactoring and means for suppression.

Although multipactoring has always been troublesome for designers and operators of accelerator radio frequency

systems, trial and error (and some clever insight) provided means for dealing with the problem in the room temperature RF systems developed in the 1940's, 50's and 60's. In the 1970's, problems with multipactoring in:

a. superconducting RF cavities for linear accelerators [24]; and,

b. third harmonic RF cavities for cyclotrons [6];

reminded accelerator designers that multipactoring is still a fundamental problem. In a report issued by Oak Ridge National Laboratory in December 1977 [25], it was remarked that:

"The many ramifications of multipactoring are only now being discovered and explored."

Unfortunately, multipactoring in accelerator radio frequency cavities has proven extremely difficult to characterize. Smith [26], Bischof [27] and Gallagher [28] have applied strictly analytical descriptions to the problem but their models have some shortcomings. In particular, as Smythe noted, in reference to multipactoring in the Berkeley 88-inch cyclotron [26], in any quarter-wave accelerating cavity with a constant dee-to-liner spacing, there is always a space that satisfies the multipactoring condition because the voltages in the cavity extend from maximum down to zero. It has been suggested that RF magnetic fields provide a sweeper action that ultimately quenches two point multipactoring as the multipactoring range rushes away from the RF electric field maximum and towards the RF magnetic field maximum. Unfortunately, the complexity of the algebra

and the integrals associated with the solution of the kinematic equations make it difficult to set up a closed form solution. Experimental work, as reviewed by Gallagher [28] and Farrell and Gallagher [29], has been of much greater practical value.

Computer programs have been developed by Ben-Zvi, Crawford and Turneaure [30] and Boni et al [31], among others, which trace the path of a multipactoring electron in a cavity based on knowledge of the field distribution within the cavity. Although some results have been encouraging, users of such programs note that in practice, such simulations have met with mixed success in predicting the multipactoring thresholds in real cavities [32].

Suppression of Multipactoring

Multipactoring can be made less troublesome in a number of ways:

The accelerating voltage can be made to rise quickly enough that electron loading cannot build up fast enough to quench it. Smith [26] suggested that if the accelerating voltage increased at a minimum rate of 1 kilovolt/microsecond through the multipactoring range, the multipactoring range could easily be passed through. It has also been suggested that the accelerating voltage should not remain in the multipactoring region for longer than five RF periods but this figure is probably highly dependent on the quality of the vacuum. Experience has shown that it is far easier to break through multipactoring in a hard vacuum than

it is to break through multipactoring in a soft vacuum;

A DC bias of a few hundred volts placed across the multipactoring surfaces [23] will suppress multipactoring but is awkward to implement;

The geometry of the cavity or structures within the cavity such as the location of coupling loops can be altered [31], a successful strategy in stubborn cases; or

The surface of the cavity can be coated with a material having a low secondary emission coefficient, such as aquadag, as was done at SIN [6].

The rate at which the accelerating voltage can be made to rise during a pulse-on is constrained by the energy storage capacity of the RF cavity which is usually described in terms of its quality factor:

$$V_{acc}(t) = V_o (1 - e^{-\omega t/2Q}) \qquad (D.14)$$

where Q is the loaded quality factor of the system. In very high Q systems, such as SIN, it is not possible to pulse on the accelerating voltage fast enough to overcome multipactoring due to this fundamental limitation. Other methods, such as simply allowing the multipactor discharge to burn itself out, must be used to raise the accelerating voltage above the multipactoring threshold. In systems with moderate Q's, such as TRIUMF, one can pulse the accelerating voltage to a final value that is higher than the multipactoring threshold so the accelerating voltage will rise at an acceptable rate through the multipactoring range.

The upper limit to the multipactoring range is proportional to the square of the RF frequency and the square of the distance between the surfaces. Thus as the RF frequency is increased, as for example in the third or fifth harmonic booster cavities (with gaps of similar dimension to the fundamental cavity) planned for the cyclotron, the multipactoring problem worsens greatly.

A Simplified Model of the Multipactor Effect

A simplified model of multipactoring is presented in fig. D.1 and the supplement that accompanies it. In such models, it is generally assumed that two electrodes (parallel metal plates) are separated by a vacuum. An alternating potential is applied between plates. The model is designed to answer the question, "Under what conditions (voltage, frequency, starting phase, gap spacing) can a multipactor discharge be sustained?" In general, one requires a source of residual ions and a mean free path longer than gap length, d. The surfaces must have secondary emission coefficients greater than 1. The electron clouds must traverse the gap in an **exact** odd multiple of half cycles. Starting phase with respect to the peak of the RF waveform is a free parameter, however.

The model has serious limitations, however. It takes no account of either a static external magnetic field (this could be accounted for by increasing the effective gap length, however) or an RF magnetic field. It assumes that the velocity of secondary emission is zero and takes no

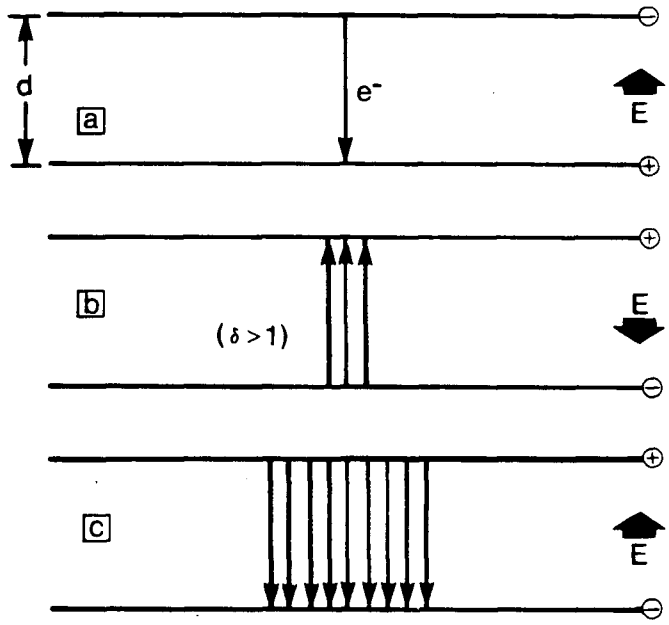

Fig. D.1 Evolution of a Multipactor Discharge

A Simplified Model of the Multipactor Effect

A multipactor discharge can be sustained between the plates of a parallel plate capacitor or similar structure provided:

- the mean free path is greater than the width of the gap
- the secondary emission coefficient of the metal surfaces δ is greater than one
- the relationship between the magnitude of the applied RF potential V_o, its frequency ω, and the gap width d must be such than an electron can, depending on its starting phase with respect to field reversal ϕ, traverse the gap in an odd multiple of half cycles.
- there is a source of residual ions to begin the cascade process

Summary of the Kinematics of Multipactoring

$$F = m \frac{d^2x}{dt^2} = eE \sin(\omega t + \phi)$$

$$\frac{d^2x}{dt^2} = \frac{eV_o}{md} \sin(\omega t + \phi)$$

$$\frac{dx}{dt} = \frac{eV_o}{\omega md} (\cos \phi - \cos(\omega t + \phi)); \quad \frac{dx}{dt} = 0 \text{ @ } t = 0$$

Supplement to Fig. D.1

A Simplified Model of the Multipactor Effect (continued)

$$x = \frac{eV_o}{\omega^2 md} (\omega t \cos \phi - \sin(\omega t + \phi) + \sin \phi); \quad x = 0 \text{ @ } t = 0$$

$\omega t = (2n-1)\pi$; the condition must be cyclic

$$d = \frac{eV_o}{\omega^2 md} (2n-1)\pi \cos \phi - \sin((2n-1)\pi + \phi) + \sin \phi$$

$$V_o \triangleq \frac{\omega^2 md^2}{e}$$

$$V_m = \frac{V_o}{2 \sin \phi + \pi(2n-1)\cos \phi}$$; the applied voltage at which a multipactor discharge can be sustained given ω, d, n, ϕ

V_m/V_o is plotted as a function of ϕ for various values of n in fig. D.2.

Note:
- if $\phi < 0^o$ then the E field is initially retarding
- if $\phi > 90^o$ then the electron will not be able to make it across the gap to the opposite electrode
- if ϕ is such that $dV_m/d\phi = 0$, then $V_m(\phi)$ is the minimum V_m
- V_{max} is the maximum voltage at which a multipactor discharge can be sustained

$$V_{max} = V_o/2 \; ; \quad \phi = 90^o$$

$$V_{min} = V_o/(2 \sin \phi + \pi(2n-1) \cos \phi) \; ; \quad \phi = \tan^{-1}(2/(2n-1)\pi)$$

V_{max} and V_{min} are plotted as a function of d/λ (for various values of n) in fig. D.3.

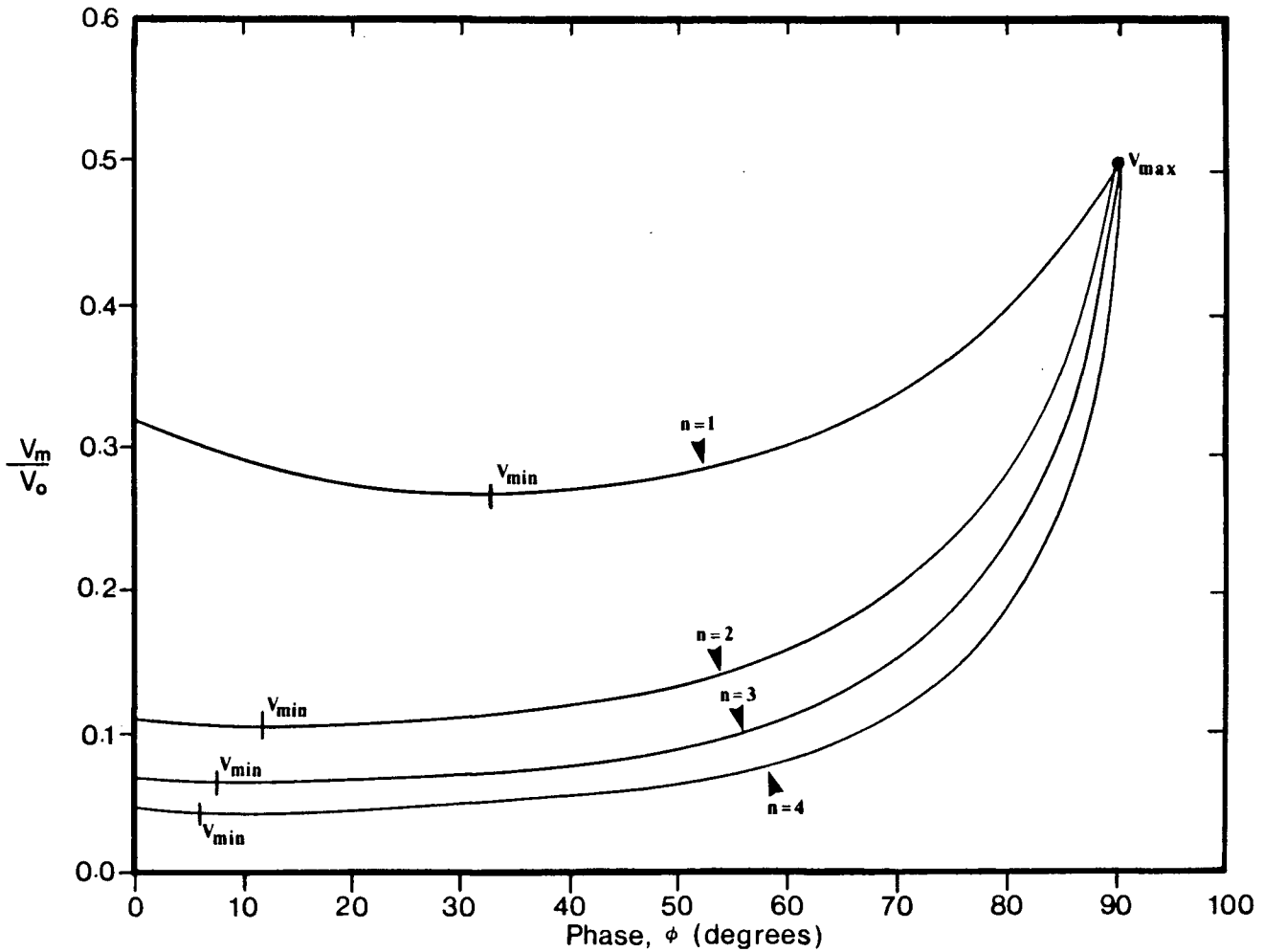

Fig. D.2 Multipactoring Threshold Voltage as a Function of Starting Phase

Ref: Fig. D.1 and supplement

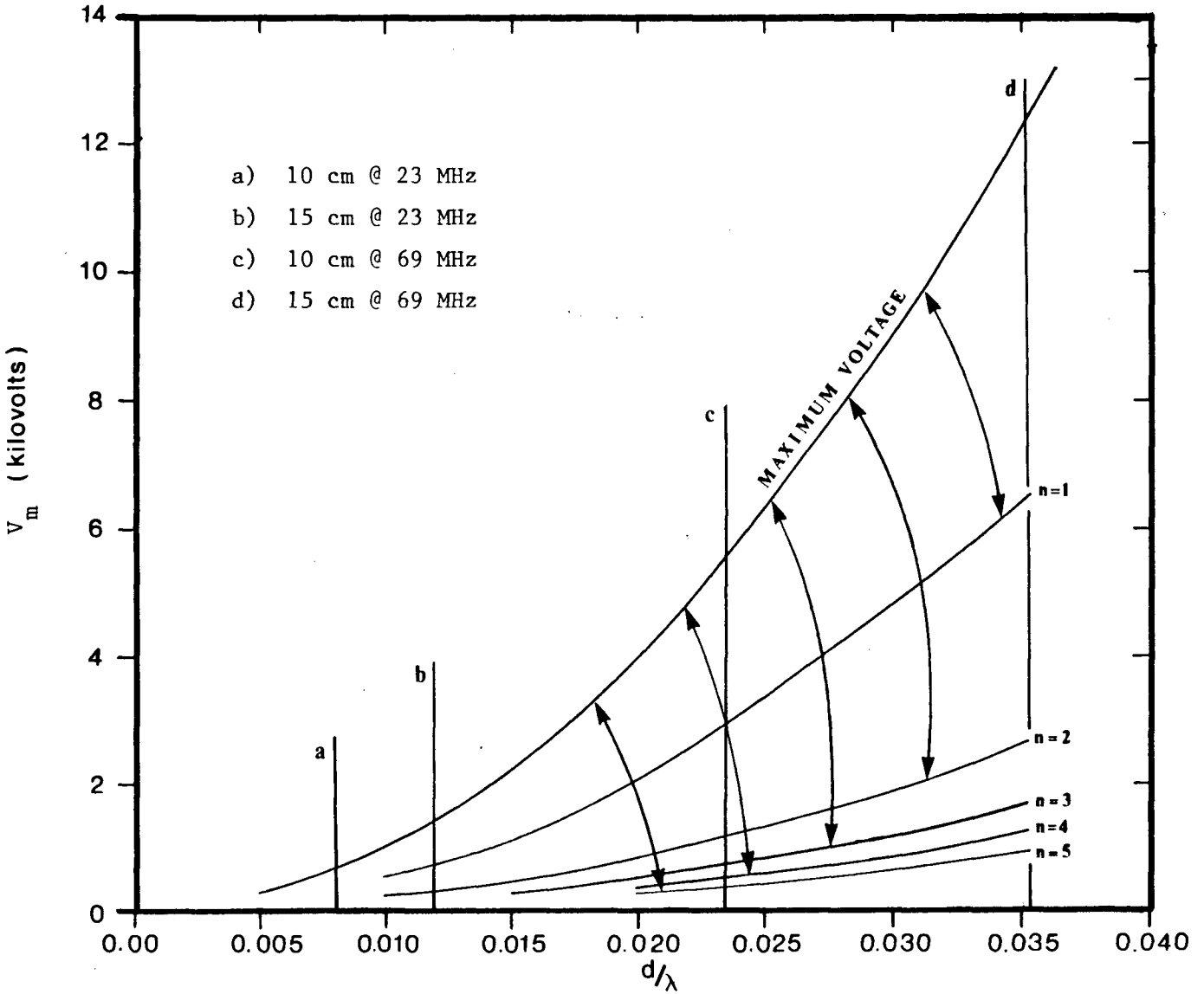

Fig. D.3 Multipactoring Threshold Voltage as a Function of Gap Length and RF Wavelength

Ref: Fig. D.1 and supplement

account of the secondary emission characteristics of the metal surfaces. It does not predict the final multipactor saturation current.

Its most serious shortcoming is that it does not resolve Smythe's paradox, i.e. in a rectangular or coaxial cavity, there is always a space that satisfies the multipactoring condition becuase the voltage goes from maximum down to zero in a continuous function. However, an analytical extension of the model to resolve the paradox would be very unwieldy. The multipactoring voltage as a function of starting phase angle is presented in fig. D.2. A graph for estimating the multipactoring voltage thresholds over a typical range of gap dimensions and RF frequencies is presented in fig. D.3.

D.5 OBSERVATIONS OF MULTIPACTORING IN THE TRIUMF RF SYSTEMS TEST FACILITY

Observations of multipactoring in the TRIUMF RF systems test facility are presented in fig. D.4. The leading and falling edges of a 1 millisecond pulsed RF drive signal were observed at the output of the cavity's dee voltage probe as the amplitude of the pulse was varied above and below the multipactoring theshold. Once above the multipactoring threshold, the RF drive was switched to continuous output.

Multipactoring Threshold - Continuous RF Drive

The RF drive level was slowly lowered until a multipactor discharge began. This occurred when the dee

RF Frequency:

23.3300 MHz

Vacuum:

10^{-5} Torr

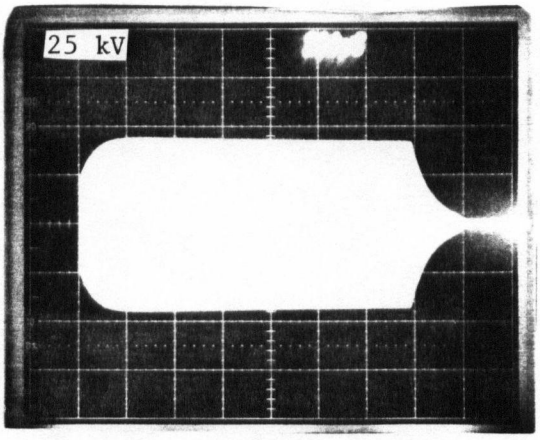

Vertical

25 kV/div

Horizontal

200 usec/div

(a) Dee Voltage in RF Systems Test Facility Cavity During Pulsed Mode Operation

Fall of Dee Voltage Following Removal of RF Drive

Note onset of a multipactor discharge (rapid decrease in decay time constant) at just under 3 - 4 kilovolts.

Initial Rise of Dee Voltage Through Multipactoring Region

dV/dt > 375 V/μsec

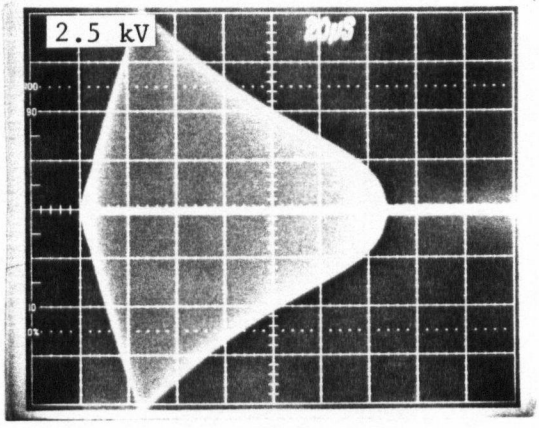

Vertical

2.5 kV/div

Horizontal

20 usec/div

(b) Expanded View of Rising and Falling Edges of RF Pulse in (a).

Fig. D.4 Observations of Multipactoring in the TRIUMF RF Systems Test Facility Cavity

voltage suddenly dropped from approximately 5 kilovolts to several tens of volts.

This threshold is far higher than the threshold predicted by the simplified model of multipactoring. Assuming that the model is basically correct, and considering Smythe's observation, the results suggest that the multipactor discharge zone moves back along the transmission line towards the root until it reaches a point approximately 50 centimetres from the root. At this point the trajectory of the multipactoring electrons is probably so disturbed by the influence of the RF magnetic field that the resonant condition required to sustain multipactoring is no longer satisfied.

Inspection of fig. 2.1, the cross-section of the accelerating gap, shows that many of the electric field lines in the accelerating field follow paths that are longer than the specified dee gap. The simplified model clearly shows that at a given frequency, longer gaps have a higher multipactor threshold voltage. This might explain why the multipactor threshold voltage is higher than initially expected, but it does not resolve Smythe's paradox.

These results suggest that the simplified model that is commonly used [26]-[28] to describe multipactoring in quarter-wave accelerating cavities:

a. does not completely describe the true physical situation; and,

b. in the case of the TRIUMF RF systems test facility, gives predicted thresholds that are too low by a factor of five.

A search of the multipactor literature did not find any quantitative solution or description of multipactoring in a quarter-wave stub although it has been mentioned in passing by two people: Bischof [27] and Smythe responding to Smith [26]. This suggests that an investigation of this rather fundamental problem is long overdue.

Multipactoring Threshold - Pulsed RF Drive

The multipactoring threshold during operation with the RF drive pulsed on for 1 millisecond every 25 milliseconds was also measured. The threshold, approximately 27 kilovolts, was a factor of five greater than the continuous drive case. The result is easily explained. The rate of voltage rise, as described by equation (D.14), decreases as the voltage approaches its final value. As noted earlier, the dee voltage must pass through the multipactor zone before sufficient electron loading to spoil the cavity Q builds up. The results suggest that given an unloaded quality factor of about 5800 at 23 MHz, dV_{dee}/dt is not high enough to overcome multipactor loading if the multipactor zone has not been passed through by the time $V_{dee} = 1/5\ V_{final}$.

Anomalous RF Rectification in Connection with Multipactoring

During the RF flat-topping tests described in chapter three, apparent rectification of the RF during cavity surface conditioning was often observed on an oscilloscope monitoring the output of the dee voltage probes. This was a very unexpected observation. A search of the literature showed that F.G. Tinta [33] observed a similar effect in the Nevis syncrocyclotron. Conditions for RF rectification can appear when an asymmetry is created in the available current carriers around electrodes. In his case, the multipacting gap was biased. Tinta suggested that, "**in biased multipacting gaps, the energy of electrons hitting opposite electrode surfaces is not symmetrically distributed and this may result in asymmetric secondary electron yield.**"

D.6 X-RAY EMISSION BY ACCELERATOR RF CAVITIES

The hard vacuum and high voltages present in accelerator RF cavities combine to make them copious producers of X-rays. During RF system development work, these X-rays can be a serious safety hazard and special precautions must be taken.

The X-rays can be put to good use in a scheme used to calibrate the dee voltage probes in both the MSU [34] and IUCF [35] cyclotrons. In this technique, the peak dee voltage is inferred from a measurement of the end-point of the bremsstrahlung continuum made using a Si(Li) X-ray detector. Miller and Kashy [34] suggest that the accuracy of the X-ray calibration technique is probably around 1 to 2

percent for voltages above 30 kilovolts. Such a calibration technique would be very useful at TRIUMF where the absolute calibration of the capacitive dee voltage probes has recently been questioned.

References:

[1] J. Riedel. "R.F. Systems." *IEEE Trans* NS-26(2):2133 (April 1979).

[2] R.A. Tennant. "Accelerator Vibration Issues." *IEEE Trans* NS-32(5):2868-2869 (October 1985).

[3] D. Dohan, G. Dutto, K. Fong, R. Laxdal, V. Pacak, R. Poirier, R. Worsham, and M. Zach. "Requirements for a New Resonator Structure at TRIUMF." *Proc 10th Int Conf on Cyclotrons and their Applications*, pp 357-359 (1984).

[4] "Care and Feeding of Power Grid Tubes." San Carlos, California: Varian, Eimac Division. pp 42-45 (1967).

[5] D.R. Vaughan, G.E. Mols, D.W. Reid, and J.M. Potter. "A High-Power, Solid-State RF Source for Accelerator Cavities." *IEEE Trans* NS-32(5):2857-2859 (October 1985).

[6] S. Adam, W. Joho, P. Lanz, H. Leber, N. Schmid, U. Schryber. "First Operation of a Flattop Accelerating System in an Isochronous Cyclotron." *IEEE Trans* NS-28(3):2721-2723 (June 1981).

[7] International Telephone and Telegraph Co. "Reference Data for Radio Frequency Engineers." Indianapolis: Howard W. Sams & Co, Inc. pp 23-20 - 23-21 (1968).

[8] A. Prochazka. "Detuning of the Resonator." TRIUMF Design Note TRI-DN-71-34 (September 1971).

[9] R.B. McKenzie-Wilson. "Tuning System for Capacitively Loaded $\lambda/4$ Accelerating Cavity." *IEEE Trans* NS-32(5):2786-2787 (October 1985).

[10] Q. Kerns, C. Kerns, H. Miller, S. Tawzer, J. Reid, R. Webber, and D. Wildman. "Fermilab Tevatron High Level RF Accelerating Systems." *IEEE Trans* NS-32(5):2809-2811 (October 1985).

[11] W.D. Kilpatrick. "A Criterion for Vacuum Sparking Designed to Include Both RF and DC." University of California Radiation Laboratory - UCRL Report 2321 (4 September 1953).

[12] T.W. Dakin. "Insulating Gases" in Standard Handbook for Electrical Engineers, Donald G. Fink, ed. New York: McGraw-Hill, (1977) pp 4-131 - 4-138.

[13] W. Peter, R.J. Faehl, A. Kadish, and L.E. Thode. "Criteria for Vacuum Breakdown in RF Cavities." *IEEE Trans* NS-30(4):3454-3456 (August 1983).

[14] P.T. Farnsworth. "Television by Electron Image Scanning." *J. Franklin Inst* 218:411-444 (1934).

[15] E.W.B. Gill and A von Engel. "Starting Potentials of High-Frequency Gas Discharges at Low Pressure." *Proc Roy Soc* A192:446-463 (1948).

[16] B. Lax, W.P. Allis, and S.C. Brown. "The Effect of Magnetic Field on the Breakdown of Gases at Microwave Frequency." *J Appl Phys* 21:1297-1304 (1950).

[17] A.J. Hatch and H.B. Williams. "The Secondary Electron Resonance Mechanism of Low-Pressure High-Frequency Gas Breakdown." *J Appl Phys* 25:417-423 (1954).

[18] G.S. Harmon. "Multipacting Mechanism as The Orgin of Breakdown in High-Frequency Electrical Discharges in Gases." *Am J Phys* 47(8):722-726 (August 1979).

[19] M.P. Forrer and C Milazzo. "Duplexing and Switching with Multipactor Discharges" *Proc IRE* 50:442-45? (1962).

[20] P. Keenan. "A High Level Microwave Rectifier" Report of Scientific Research Laboratory, Lockheed-California Co. (1964).

[21] W.J. Gallagher. "The Multipactor Electron Gun." *Proc IEEE* 57(1):94-95 (1969).

[22] D.J. Liska. "Multipactoring Electron Gun for High Duty Linacs." *Proc IEEE* 59(8):1253-1254 (1971).

[23] A.J. Hatch. "Suppression of Multipacting in Particle Accelerators." *Nucl Inst Methods* 41:261-271 (1966).

[24] J. Halbritter. "Electron Loading of Superconducting RF Cavities." *Particle Accelerators* 3:163-174 (1972).

[25] "The Role of Electron Accelerators in U.S. Medium Energy Nuclear Science." Oak Ridge National Laboratory Report ORNL/PPA-77/4, p23 (December 1977).

[26] B.H. Smith. "The Radio Frequency System of the Berkeley 88-inch Cyclotron." *Nucl Inst Methods* 18,19:184-193 (1962).

[27] B. Bischof. "Rise Time of the Multipactoring Process in Cavities of Particle Accelerators." *Nucl Inst Methods* 97:81-86 (1971).

[28] W.J. Gallagher. "The Multipactor Effect." *IEEE Trans* NS-26(3):4280-4282 (June 1979).

[29] S.R. Farrell and W.J. Gallagher. "Further Notes on the Multipactor Effect." *IEEE Trans* NS-32(5):2900-2902 (October 1985).

[30] I. Ben-zvi, J.F. Crawford, and J.P. Turneaure. "Electron Multiplication in Cavities." *IEEE Trans* NS-20:54-58 (1973).

[31] R. Boni, V. Chimenti, P. Fernandes, R. Parodi, B. Spataro, and F. Tazzioli. "Reduction of Multipacting in an Accelerator Cavity." *IEEE Trans* NS-32(5):2815-2817 (October 1985).

[32] J.M. Brennan, State University of New York - Stoney Brook. Private Communication, (1985).

[33] F.G. Tinta. "Multipacting Related Processes and RF Breakdown Protection by using Bias Pulsing at the Nevis Synchrocyclotron." *Proc 7th Int Conf on Cyclotrons and their Applications*, pp 151-155 (1975).

[34] P. Miller and E. Kashy. "Absolute Calibration of the Dee Voltage by X-Ray Endpoint." *Proc 7th Int Conf on Cyclotrons and their Applications*, pp 171-174 (1975).

[35] R.E. Pollock. "Status Report on the Indiana University Cyclotron Facility." *Proc 7th Int Conf on Cyclotrons and their Applications*, pp 27-32 (1975).