MODELLING AND PARAMETER ESTIMATION OF UNKNOWN LARGE POWER SYSTEM DYNAMICS

by

Mohamed Ali Ahmed Ali EL-SHARKAWI
B.Sc. Cairo High Institute of Technology

A THESIS SUBMITTED IN PARTIAL FULFILMENT OF
THE REQUIREMENT FOR THE DEGREE OF
MASTER OF APPLIED SCIENCE

in the Department
of
Electrical Engineering

We accept this thesis as conforming
to the required standard

THE UNIVERSITY OF BRITISH COLUMBIA

June 1977

In presenting this thesis in partial fulfilment of the requirements for an advanced degree at the University of British Columbia, I agree that the Library shall make it freely available for reference and study. I further agree that permission for extensive copying of this thesis for scholarly purposes may be granted by the Head of my Department or by his representatives. It is understood that copying or publication of this thesis for financial gain shall not be allowed without my written permission.

Department of Elec. Eng.

The University of British Columbia
2075 Wesbrook Place
Vancouver, Canada
V6T 1W5

Date July 4, 1977

ABSTRACT

The current practice in modelling unknown large power systems is reviewed in Chapter 1, and the inadequate representation by constant voltage and constant frequency is discussed.

To determine the unknown large power system dynamics, estimation must be used. A complete model for estimation, including known and unknown power systems, is derived in Chapter 2 and the mathematical formulation in Chapter 3.

Chapter 4 presents the estimation algorithm, data and results. It is found that the estimated unknown system parameter values are unique, independent of various operating conditions.

Conclusions are drawn in Chapter 5.

CONTENTS

ACKNOWLEDGEMENT

I wish to extend my sincere thanks to my supervisors, Dr. Y.N. Yu and Dr. M.D. Wvong, for their guidance, advice and encouragement during my period of study.

The financial support from the University of British Columbia and the National Research Council of Canada is gratefully acknowledged.

My thanks also to Ms. Mary-Ellen Flanagan for typing the thesis.

I am greatly indebted to my parents for their encouragement throughout my post-graduate work, and finally, I must give credit to my wife, Fatma, who through her sacrifices has made it possible for me to complete this work.

CHAPTER 1

INTRODUCTION

Much work has already been done on the modelling of power systems so that the computer models may represent the actual system with nearly the same characteristics. These computer models are widely used in the study of power system dynamics and control. For example, Dandeno, Hauth and Schulz [1] have reported on the accuracy of power system stability simulations, as affected by the degree of details in the representation of the synchronous generators and the data used. Another study was also recorded [2].

Although much work has been done on modelling power systems, little has been done on modelling the unknown large power system of neighboring areas. An assumption is usually made that an unknown large power system may be represented by an infinite-bus with constant voltage and constant frequency. For example, deMello and Concordia [3] used their model with an infinite-bus for the supplemental excitation control design. El-Sherbiny and Mehta [4] made a synchronous machine stability study for different loading and power factors using the deMello and Concordia model which includes an infinite-bus. Yu, et al. [5-9] used various synchronous machine models for the linear optimal control design. Again an infinite-bus was used for the representation of a neighboring unknown large power system.

The assumption of constant voltage and constant frequency of an unknown large power system, however, is not always valid. In this thesis a better representation for the unknown large power system than the infinite-bus will be developed, which may be called the "Dynamic Infinite System Equivalent". Also included will be an estimation method for the

determination of the parameters of the unknown system.

A review of the literature shows that there are many estimation techniques. Examples are: a) the Least-Squares method [10-11] by which the output error cost function of the calculated and measured variables in a quadratic form is minimized, b) the Maximum Likelihood method [11] when there is no prior information available regarding the probabilistic description of the parameters to be estimated, c) the Bayes' Estimation theory [11] by which the Bayes risk function representing the expected cost of an error in estimation is minimized, d) the Linear Minimum Variance method [11] by which the trace of the variance of the error function is minimized, e) the Kalman Filter technique [11-12] in which a zero mean white noise is considered, and f) the Instrumental Variable method [13] by which the parameter set can be estimated from an array of linear algebraic equations, a set of observations, and a set of unobservable noise terms.

Estimation techniques began to find useful application in power system studies very recently. Examples are as follows. Stanton [14] estimated turboalternator transfer functions by using normal operating data. Wong and Polak [13] identified a linear discrete time system by using the instrumental variable method. Schweppe, et.al. [15-17] developed static state estimation of power systems. Debs and Larson [18] used a dynamic estimator to track the state of a power system. Miller and Lewis [12] used a Kalman filter for power system state estimation. Debs [19] estimated external network equivalents from internal system data. Handschin, et al. [20] accounted for bad data in power system estimation. Ueda, et al. [21] estimated the transient state of a power system by a discrete nonlinear observer. Lee and Tan [10] used a weighted least-squares estimator for synchronous machine studies. Takata, et al. [22] developed an iterative

sequential observer for estimating the transient state of a power system. Ueda, et al. [23] estimated the transient state of a multi-machine power system by an extended linear observer.

This thesis is mainly concerned with the estimation of dynamics of unknown large power systems. It is found that the weighted-least-squares -method without noise statistics gives the most satisfactory results. The estimation model will be developed in Chapter 2. The estimation technique will be presented in Chapter 3, and the algorithm, data and results in Chapter 4.

CHAPTER 2

MODELLING THE SYSTEM FOR ESTIMATION STUDIES

The modelling of a power system made up of a generator, a local load, and a transmission line interconnected to other generators has been discussed previously by many authors [3,6,26].In their models, as in most other models, the dynamics of the unknown neighboring generators are neglected and simply approximated by an "infinite-bus" with constant voltage and constant frequency. In fact neither the voltage nor the frequency of the "infinite bus" are constant. Therefore, a better model is needed to represent the effect of changes in voltage and frequency of the unknown system. Fig. 2-1 shows the system to be studied, consisting of the known system (i) and the unknown dynamic infinite system (j), interconnected by a tie line. There is also a local load.

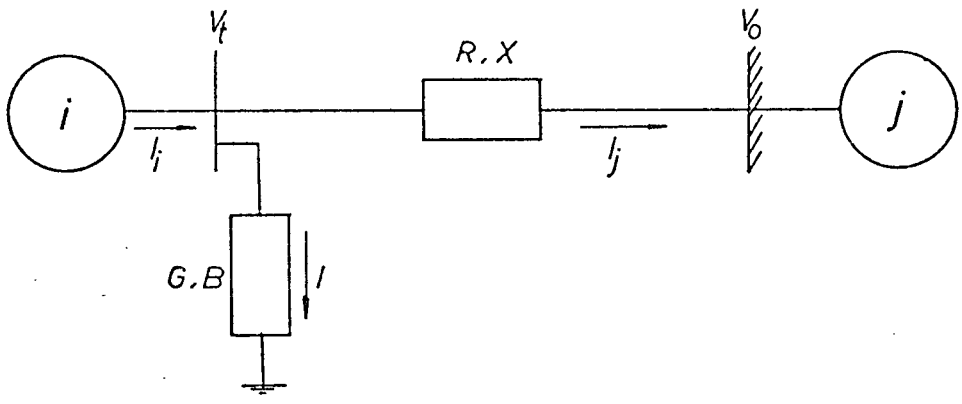

Fig. 2-1 Interconnected System

The known system (i) is represented by an equivalent salient-pole synchronous generator with voltage regulator, which may include excitation control. The unknown infinite system (j) is represented by a cylindrical rotor synchronous machine, which has only one synchronous reactance.

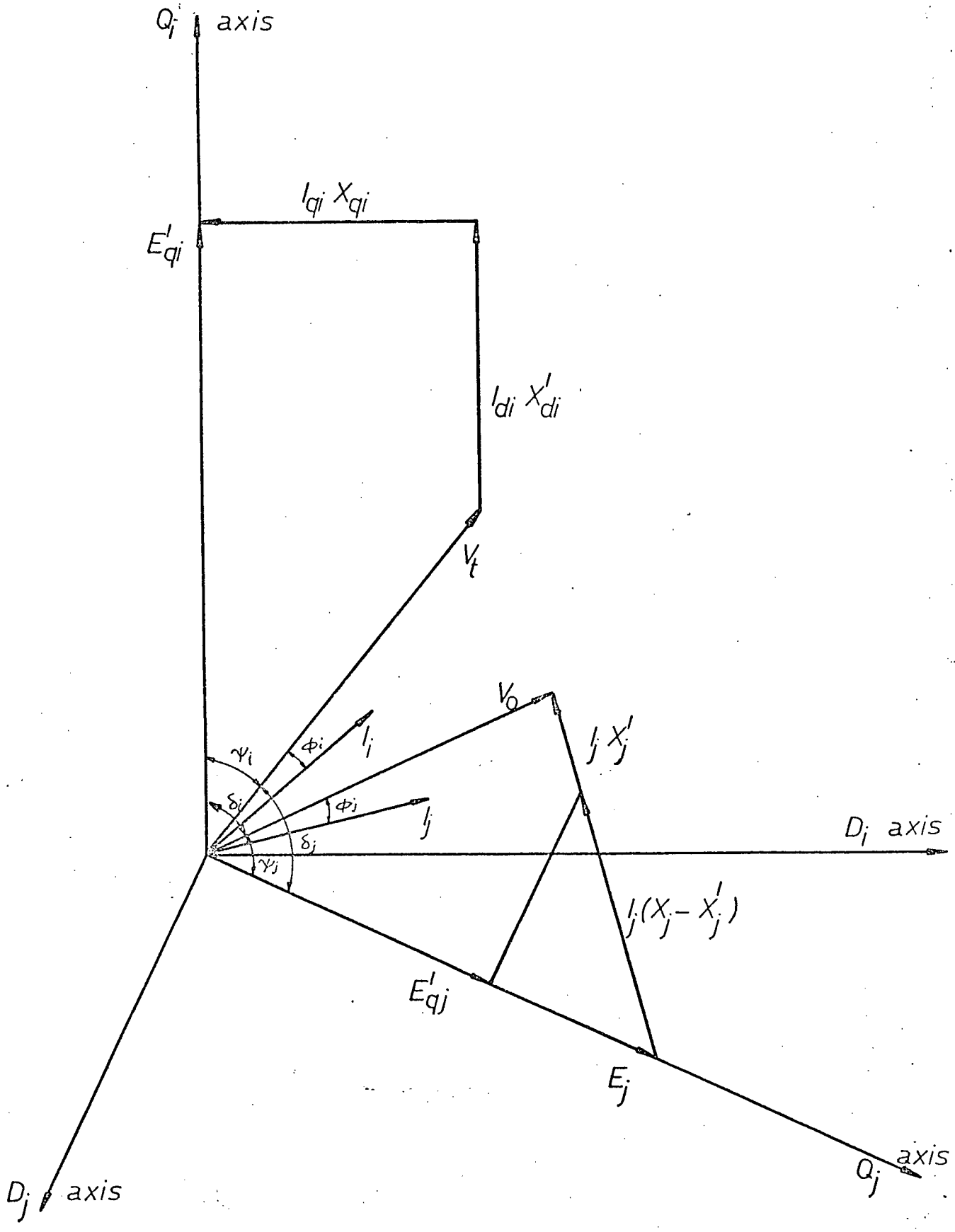

Fig. 2-2 Phasor diagram of the system

The phasor diagram of the two machines is shown in Fig. 2-2 where D_i and Q_i represent the direct and quadrature axes of the ith system, respectively, and D_j and Q_j are the corresponding axes of the jth system.

In this analysis we shall consider the flow of current in the transmission line to be from i to j, which means that the jth system is taking electric energy from the ith system or is motoring. This is shown clearly in Fig. 2-1. If I_j changes its direction, both systems will supply electric energy to the local load.

The analysis consists of three parts.

1. The modification to the deMello-Concordia model [3] to fit the interconnected system under study.
2. The derivation of a simple model to represent the unknown system.
3. To find a state variable representation for the complete system suitable for estimating the unknown parameters.

The torque equations in linearized form for the two machines are

$$\begin{aligned} M_i \Delta \dot{\omega}_i + D_i \Delta \omega_i &= \Delta T_{mi} - \Delta T_{ei} \\ M_j \Delta \dot{\omega}_j + D_j \Delta \omega_j &= \Delta T_{mj} - \Delta T_{ej} \end{aligned} \tag{2-1}$$

where M: Inertia constant

ω: Mechanical angular velocity

D: Damping coefficient

T_m: Mechanical torque

T_e: Electric torque

We shall consider that D_j represents the damping of the whole j^{th} system, not only the damping of the synchronous machine, but also all the electric damping derived from stabilization. The true mechanical speed is represented by $\bar{\omega}$, and the per unit mechanical speed ω is equal to $\bar{\omega}/\omega_{mb}$

where ω_{mb} is the base mechanical angular velocity. Note that

$$\omega = \bar{\omega}/\omega_{mb} = \omega_e/\omega_{eb} \tag{2-2}$$

where ω_e is the electrical angular velocity and ω_{eb} is the base electrical angular velocity which is 377 rad/sec. for a 60 Hz system. Therefore,

$$\omega_e = 377\ \omega \tag{2-3}$$

Fig. 2-3 is a block diagram representation of equations (2-1) and (2-3).

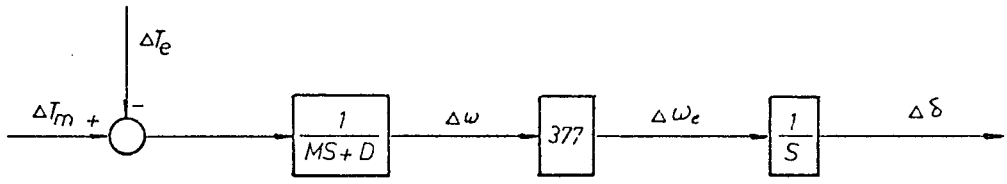

Fig. 2-3 Block diagram of the mechanical loop

2.1 Modelling the Known System

From Fig. 2-1 we have

$$ZI_i = (1 + ZY)\ V_t - V_o \tag{2-4}$$

where Z: Transmission line impedance

Y: Local load admittance

V_t: Terminal voltage of system i

V_o: Dynamic infinite bus voltage

I_i: Output current of system i

In the $D_i - Q_i$ coordinates of the ith system, the current components can be written as

$$\begin{bmatrix} I_{di} \\ I_{qi} \end{bmatrix} = \begin{bmatrix} Y_{1i} \\ Y_{2i} \end{bmatrix} E'_{qi} - \frac{V_o}{Z_i^2} \begin{bmatrix} R_2 & X_2 \\ -X_1 & R_1 \end{bmatrix} \begin{bmatrix} \sin\delta_i \\ \cos\delta_i \end{bmatrix} \tag{2-5}$$

where $I_i = I_{di} + jI_{qi}$

I_{di}, I_{qi}: The d and q components

E'_{qi}: An internal voltage; Fig. 2-2

V_o: The magnitude of phasor V_o

$Z = R + jX$

$Y = G + jB$

$1 + ZY = A_1 + jA_2$

$R_1 = R - A_2 X'_d$

$R_2 = R - A_2 X_q$

$X_1 = X + A_1 X'_d$

$X_2 = X + A_1 X_q$

$Z_i^2 = R_1 R_2 + X_1 X_2$

$Y_{1i} = (X_2 A_1 - R_2 A_2)/Z_i^2$

$Y_{2i} = (X_1 A_2 + R_1 A_1)/Z_i^2$

All the above are defining equations.

The linearized form of (2-5), taking into account that V_o is not constant, is

$$\begin{bmatrix} \Delta I_{di} \\ \Delta I_{qi} \end{bmatrix} = \begin{bmatrix} Y_{1i} \\ Y_{2i} \end{bmatrix} \Delta E'_{qi} + \begin{bmatrix} f_{di} \\ f_{qi} \end{bmatrix} \Delta \delta_i + \begin{bmatrix} g_{di} \\ g_{qi} \end{bmatrix} \Delta V_o \quad (2\text{-}6)$$

where

$$\begin{bmatrix} f_{di} \\ f_{qi} \end{bmatrix} = \frac{V_o}{Z_i^2} \begin{bmatrix} X_2 & -R_2 \\ R_1 & X_1 \end{bmatrix} \begin{bmatrix} \sin \delta_{io} \\ \cos \delta_{io} \end{bmatrix}$$

$$\begin{bmatrix} g_{di} \\ g_{qi} \end{bmatrix} = \frac{-1}{Z_i^2} \begin{bmatrix} R_2 & X_2 \\ -X_1 & R_1 \end{bmatrix} \begin{bmatrix} \sin \delta_{io} \\ \cos \delta_{io} \end{bmatrix}$$

and δ_{io} = Initial value of the torque angle of system i.

We can now express the following equations in terms of $\Delta E'_{qi}$, $\Delta \delta_i$ and ΔV_o

$$T_e = E'_{qi} I_{qi} + (X_q - X'_d) I_{di} I_{qi} \tag{2-7}$$

$$(1 + ST'_i) E'_{qi} = E_{fDi} - (X_d - X'_d) I_{di} \tag{2-8}$$

$$V_t^2 = V_{td}^2 + V_{tq}^2 \tag{2-9 a}$$

$$V_{td} = I_{qi} X_q \tag{2-9 b}$$

$$V_{tq} = E'_{qi} - I_{di} X'_d \tag{2-9 c}$$

$$E_{fDi} = X_{ad} V_f / r_f \tag{2-10}$$

where

E'_{qi}: An internal voltage of ith system

T'_i : Field time constant; $X_f/(\omega_o r_f)$

E_{fDi}: Equivalent field voltage

X_{ad}: Stator to rotor mutual reactance

Let us find the electric torque ΔT_{ei} of the ith system first. Linearization of equation (2-7) with substitution of values of ΔI_{di} and ΔI_{qi} from equation (2-6) gives

$$\Delta T_e = K_{1i} \Delta \delta_i + K_{2i} \Delta E'_{qi} + C_1 \Delta V_o \tag{2-11}$$

where

$$\begin{bmatrix} K_{1i} \\ K_{2i} \\ C_1 \end{bmatrix} = \begin{bmatrix} 0 \\ 1 \\ 0 \end{bmatrix} I_{qio} + \begin{bmatrix} f_{qi} & f_{di} \\ Y_{2i} & Y_{1i} \\ g_{qi} & g_{di} \end{bmatrix} \begin{bmatrix} E'_{qio} + (X_q - X'_d) I_{dio} \\ \\ (X_q - X'_d) I_{qio} \end{bmatrix}$$

Similarly, linearization and substitution of the field voltage equation (2-8) gives

$$\Delta E'_{qi} = K_{3i} (\Delta E_{fDi} - K_{4i} \Delta \delta_i - C_2 \Delta V_o) / (1 + ST'_i K_{3i}) \quad (2\text{-}12)$$

where $K_{3i} = 1/(1 + (X_d - X'_d) Y_{1i})$

$K_{4i} = (X_d - X'_d) f_{di}$

$C_2 = (X_d - X'_d) g_{di}$

Finally, the linearization of equation (2-9 a) with substitution gives

$$\Delta V_t = K_{5i} \Delta \delta_i + K_{6i} \Delta E'_{qi} + C_3 \Delta V_o \quad (2\text{-}13)$$

where

$$\begin{bmatrix} K_{5i} \\ K_{6i} \\ C_3 \end{bmatrix} = \frac{1}{V_{to}} \begin{bmatrix} f_{qi} & -X'_d f_{di} \\ Y_{2i} & (1 - X'_d Y_{1i}) \\ g_{qi} & -X'_d g_{di} \end{bmatrix} \begin{bmatrix} V_{dio} X_q \\ \\ V_{qio} \end{bmatrix}$$

The block diagram of the known system shown in Fig. 2-4 represents the equations (2-1), (2-11), (2-12) and (2-13). Notice that ΔV_o appears at all the summing points.

2.2 Modelling the Unknown System

As mentioned before, we shall consider the unknown dynamic infinite system as a large synchronous machine with inertia and damping. For simplicity we shall consider the synchronous machine to have a cylindrical rotor. This will simplify the model and decrease the number of unknown parameters to be estimated by one. The number of differential equations also can be reduced from four to three if the secondary effects of $\Delta \delta_j$ and $\Delta E'_{qj}$ on ΔE_{fDj}, and the time delay due to excitation and voltage regulator inside the jth system, are neglected.

From Fig. 2-2 we have

$$I_{dj} = -I_j \sin (\gamma_j - \phi_j), \quad I_{qj} = I_j \cos (\gamma_j - \phi_j)$$

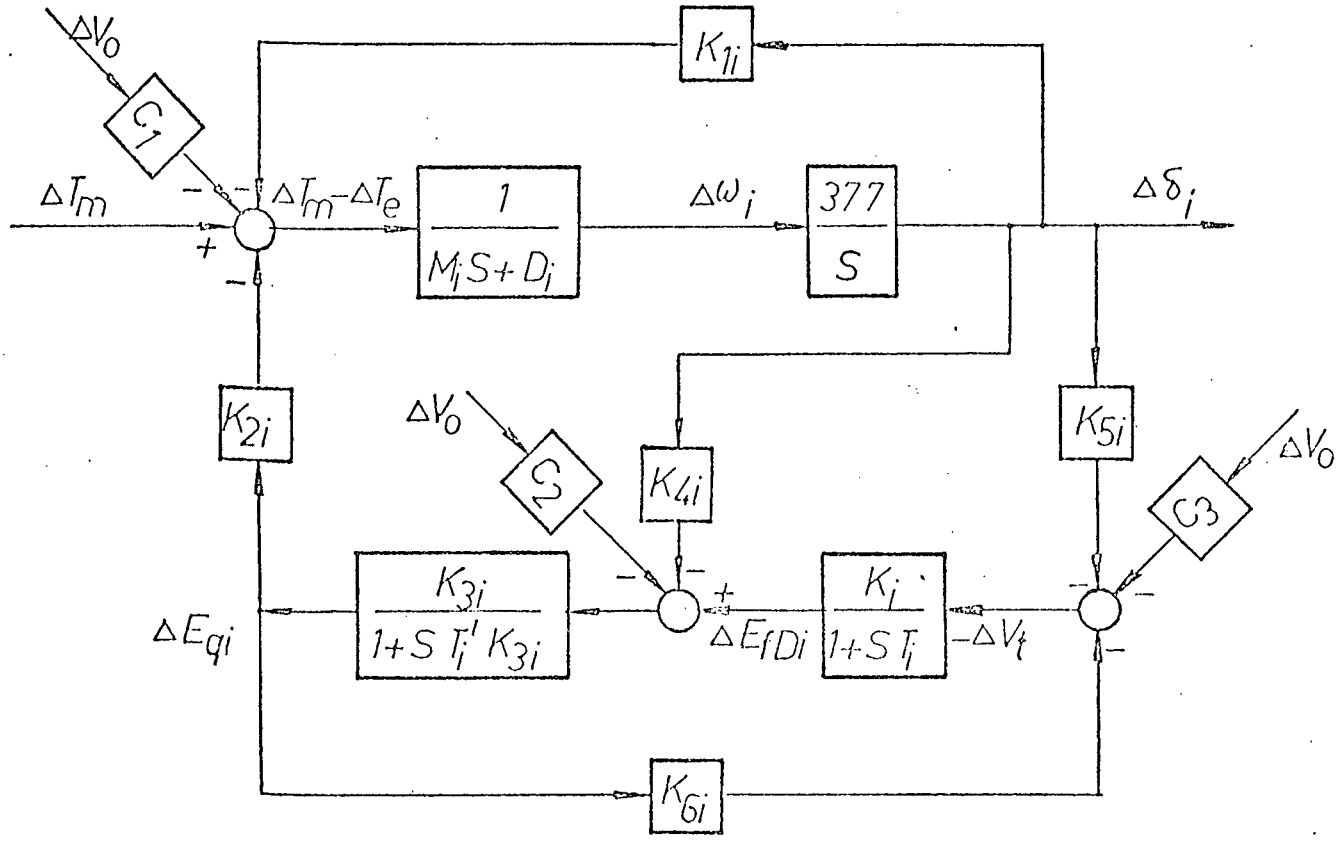

Fig. 2-4 Block diagram for the known system

$$
\begin{aligned}
V_{tdj} &= -V_t \sin \delta_j \\
V_{tqj} &= V_t \cos \delta_j \\
V_{odj} &= -V_o \sin \gamma_j \\
V_{oqj} &= V_o \cos \gamma_j \\
\overline{I}_j \, \overline{Z} &= \overline{V}_t - \overline{V}_o
\end{aligned}
\tag{2-14}
$$

The last equation can be written as

$$
\begin{bmatrix} R & -X \\ X & R \end{bmatrix} \begin{bmatrix} I_{dj} \\ I_{qj} \end{bmatrix} = V_t \begin{bmatrix} -\sin \delta_j \\ \cos \delta_j \end{bmatrix} - \begin{bmatrix} V_{odj} \\ V_{oqj} \end{bmatrix} \tag{2-15}
$$

where

$$
\begin{bmatrix} V_{odj} \\ V_{oqj} \end{bmatrix} = \begin{bmatrix} 0 \\ 1 \end{bmatrix} E'_{qj} - \begin{bmatrix} 0 & X_j \\ -X'_j & 0 \end{bmatrix} \begin{bmatrix} I_{dj} \\ I_{qj} \end{bmatrix} \tag{2-16}
$$

X_j : Synchronous reactance

X'_j : Transient reactance

E'_{qj} : An internal voltage of the jth machine

Substituting equation (2-16) into equation (2-15) we have

$$
\begin{bmatrix} I_{dj} \\ I_{qj} \end{bmatrix} = \begin{bmatrix} Y_{1j} \\ Y_{2j} \end{bmatrix} E'_{qj} + \frac{V_t}{Z_j^2} \begin{bmatrix} -R & X_e \\ X'_e & R \end{bmatrix} \begin{bmatrix} \sin \delta_j \\ \cos \delta_j \end{bmatrix} \tag{2-17}
$$

where

$$
\begin{aligned}
X_e &= X + X_j \\
X'_e &= X + X'_j \\
Z_j^2 &= R^2 + X_e X'_e \\
Y_{1j} &= -X_e / Z_j^2 \\
Y_{2j} &= -R / Z_j^2
\end{aligned}
$$

Linearization of equation (2-17) gives

$$\begin{bmatrix} \Delta I_{dj} \\ \\ \Delta I_{qj} \end{bmatrix} = \begin{bmatrix} Y_{1j} \\ \\ Y_{2j} \end{bmatrix} \Delta E'_{qj} + \begin{bmatrix} f_{dj} \\ \\ f_{qj} \end{bmatrix} \Delta \delta_j + \begin{bmatrix} g_{dj} \\ \\ g_{qj} \end{bmatrix} \Delta V_t \tag{2-18}$$

where

$$\begin{bmatrix} f_{dj} \\ \\ f_{qj} \end{bmatrix} = \frac{-V_{to}}{Z_j^2} \begin{bmatrix} X_e & R \\ \\ R & -X'_e \end{bmatrix} \begin{bmatrix} \sin \delta_{jo} \\ \\ \cos \delta_{jo} \end{bmatrix} ,$$

$$\begin{bmatrix} g_{dj} \\ \\ g_{qj} \end{bmatrix} = \frac{1}{Z_j^2} \begin{bmatrix} -R & X_e \\ \\ X'_e & R \end{bmatrix} \begin{bmatrix} \sin \delta_{jo} \\ \\ \cos \delta_{jo} \end{bmatrix}$$

V_{to} and δ_{jo} are the initial values of the terminal voltage magnitude and torque angle, respectively.

The per unit electric torque of the jth system may be calculated from

$$T_{ej} = V_{odj} I_{dj} + V_{oqj} I_{qj} \tag{2-19}$$

where V_{odj} and V_{oqj} were given in equation (2-16). Therefore the electric torque can be expressed in the form

$$T_{ej} = E'_{qj} I_{qj} - (X_j - X'_j) I_{dj} I_{qj} \tag{2-20}$$

which can be linearized

$$\Delta T_{ej} = K_{1j} \Delta \delta_j + K_{2j} \Delta E'_{qj} + B_1 \Delta V_t \tag{2-21}$$

where

$$\begin{bmatrix} K_{1j} \\ \\ K_{2j} \\ \\ B_1 \end{bmatrix} = \begin{bmatrix} 0 \\ \\ 1 \\ \\ 0 \end{bmatrix} I_{qjo} + \begin{bmatrix} f_{qj} & -fdj \\ \\ Y_{2j} & -Y_{1j} \\ \\ g_{qj} & -g_{dj} \end{bmatrix} \begin{bmatrix} E'_{qjo} - (X_j - X'_j) I_{djo} \\ \\ \\ (X_j - X'_j) I_{qjo} \end{bmatrix}$$

Similar to (2-8) we have

$$(1 + ST'_j)\, E'_{qj} = E_{fDj} + (X_j - X'_j)\, I_{dj} \tag{2-22}$$

Linearization of this equation gives

$$\Delta E'_{qj} = K_{3j}\,(K_{4j}\,\Delta\,\delta_j + B_2\,\Delta\,V_t)\,/\,(1 + ST'_j\,K_{3j}) \tag{2-23}$$

where

$$K_{3j} = 1/(1 - (X_j - X'_j)\,Y_{1j})$$

$$K_{4j} = (X_j - X'_j)\,f_{dj}$$

$$B_2 = (X_j - X'_j)\,g_{dj}$$

We have assumed a constant field voltage, i.e., ΔE_{fDj} equals zero.

Finally the infinite system voltage is

$$V_o^2 = V_{odj}^2 + V_{oqj}^2 \tag{2-24}$$

where V_{odj} and V_{oqj} were given in (2-16). Linearization of equation (2-24) gives

$$\Delta V_o = K_{5j}\,\Delta\,\delta_j + K_{6j}\,\Delta\,E'_{qj} + B_3\,\Delta\,V_t \tag{2-25}$$

where

$$\begin{bmatrix} K_{5j} \\ K_{6j} \\ B_3 \end{bmatrix} = \frac{1}{V_o} \begin{bmatrix} f_{qj} & X'_j\,f_{dj} \\ Y_{2j} & (1 + X'_j\,Y_{1j}) \\ g_{qj} & X'_j\,g_{dj} \end{bmatrix} \begin{bmatrix} -V_{odj}\,X_j \\ \\ V_{oqj} \end{bmatrix}$$

From equations (2-21) and (2-23), a block diagram representation of the dynamic infinite system may be drawn as Fig. 2-5.

2.3 The Complete Block Diagram and the State Equations

The complete block diagram is shown in Fig. 2-6.

Let the state equations of the known generator and the unknown dynamic infinite system be written as

$$\dot{X} = A\,X + P\,V$$

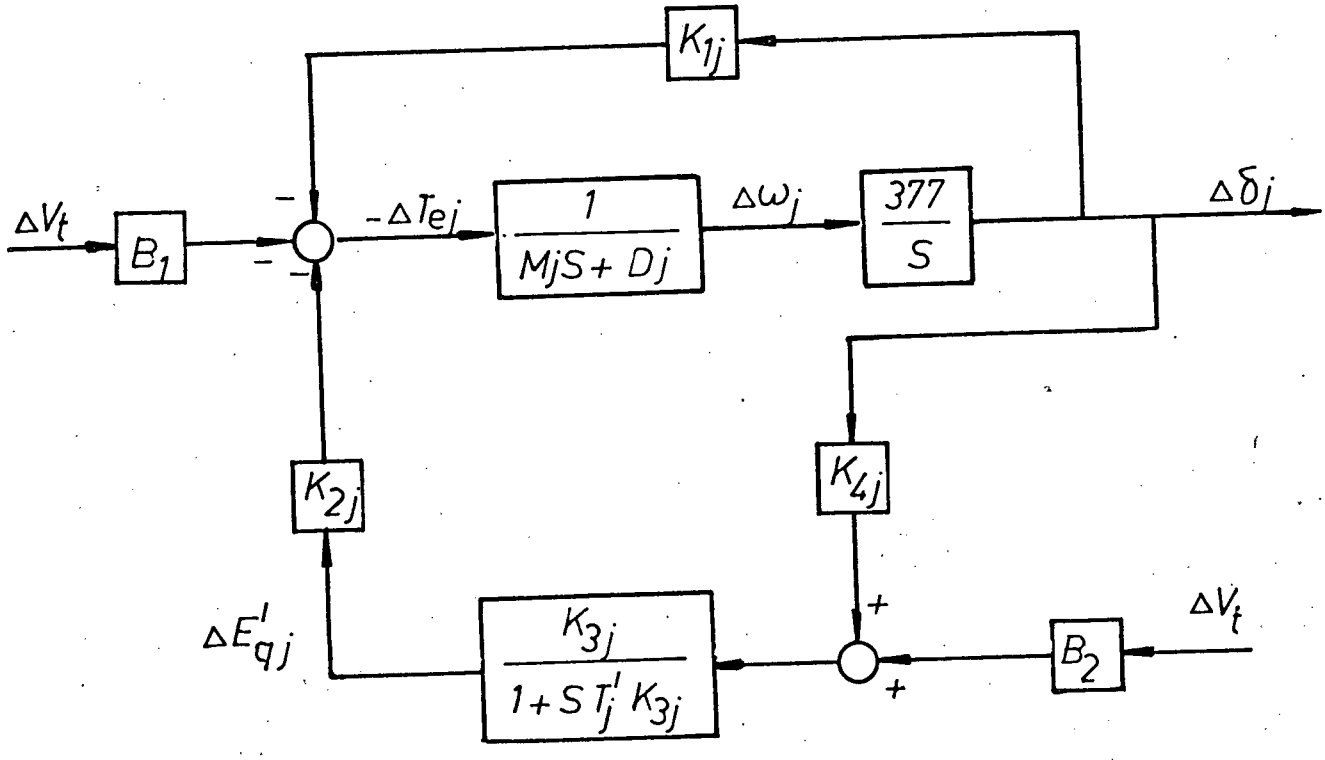

Fig. 2-5 Block diagram of the unknown system

$$Y = H X$$

where

X: the state variable vector

A: the state variable matrix

V: the distrubance

P: the disturbance input vector

Y: the output vector

H: the observation vector

Let

$$X = [\Delta \delta_i, \Delta \omega_i, \Delta E_{fDi}, \Delta E'_{qi}, \Delta \delta_j, \Delta \omega_j, \Delta E'_{qj}]^T$$

and

$$Y = \Delta V_t$$

From equations (2-13) and (2-25) the values of ΔV_t and ΔV_o can be solved

$$\Delta V_t = (K_{5i} \Delta \delta_i + K_{6i} \Delta E'_{qi} + C_3 K_{5j} \Delta \delta_j + C_3 K_{6j} \Delta E'_{qj}) / F_3$$

$$\Delta V_o = (K_{5j} \Delta \delta_j + K_{6j} \Delta E'_{qj} + B_3 K_{5i} \Delta \delta_i + B_3 K_{6i} \Delta E'_{qi}) / F_3 \qquad (2\text{-}26)$$

where $F_3 = 1 - B_3 C_3$

From Fig. 2-4 and assuming ΔT_m equals zero, the torque equation becomes

$$\Delta \omega_i = -(K_{1i} \Delta \delta_i + K_{2i} \Delta E'_{qi} + C_1 \Delta V_o) / (M_i S + D_i) \qquad (2\text{-}27)$$

Substituting the value of ΔV_o from (2-26) into (2-27) and rearranging terms, we have

$$\Delta \dot{\omega} = a_{21} \Delta \delta_i + a_{22} \Delta \omega_i + a_{24} \Delta E'_{qi} + a_{25} \Delta \delta_j + a_{27} \Delta E'_{qj} \qquad (2\text{-}28)$$

where $a_{21} = -(K_{1i} + C_1 B_3 K_{5i}/F_3) / M_i$

$a_{22} = -D_i/M_i$

$a_{24} = -(K_{2i} + C_1 B_3 K_{6i}/F_3) / M_i$

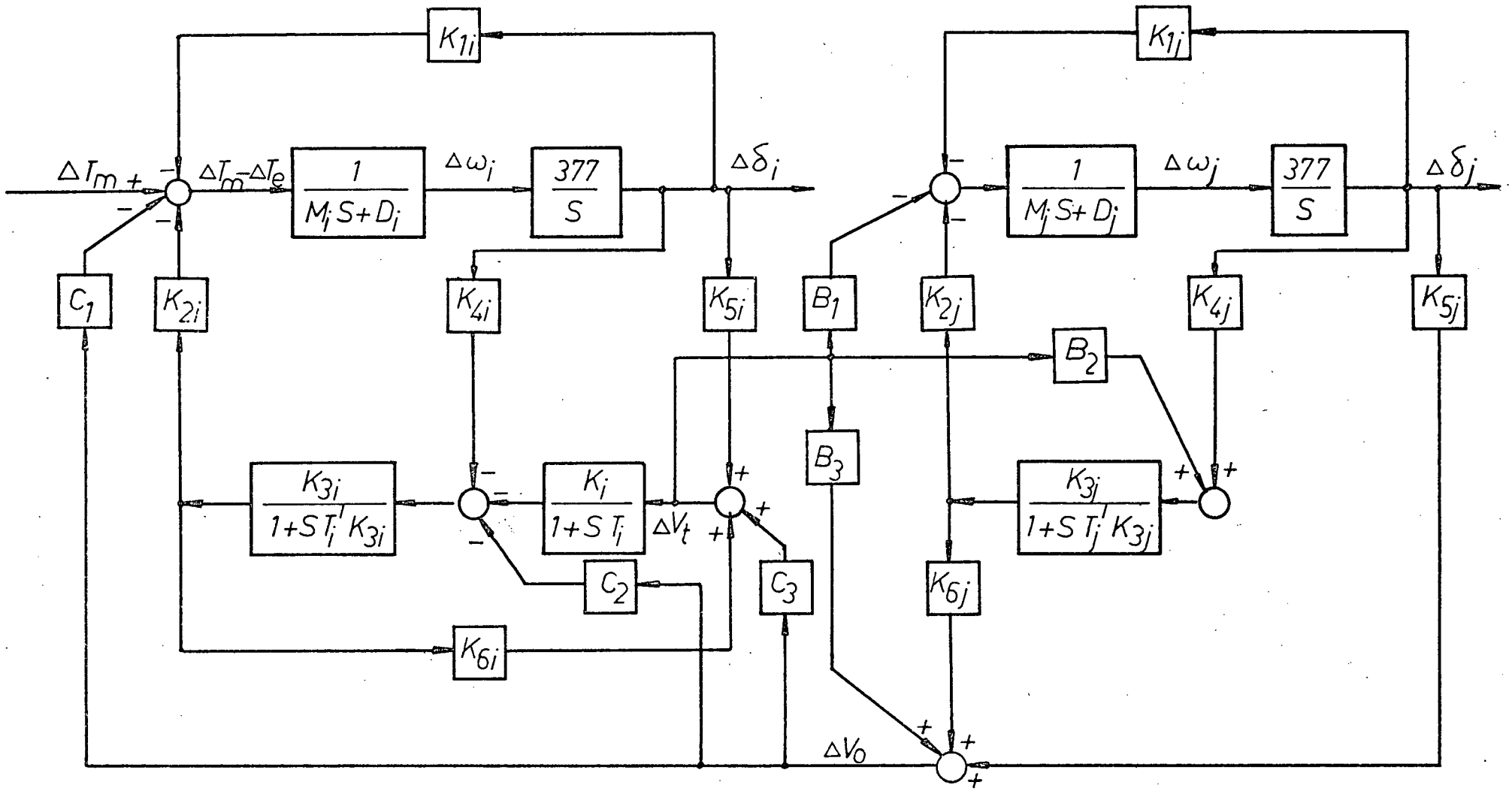

Fig. 2-6 The complete block diagram

$$a_{25} = -C_1 K_{5j} / M_i F_3$$

$$a_{27} = -C_1 K_{6j} / M_i F_3$$

From Fig. 2-4 we have

$$\Delta E_{fDi} = -K_i \Delta V_t/(1 + ST_i) \tag{2-29}$$

Substituting the value of ΔV_t from (2-26) into equation (2-29) and rearranging terms, we have

$$\Delta \dot{E}_{fDi} = a_{31} \Delta \delta_i + a_{33} \Delta E_{fDi} + a_{34} \Delta E'_{qi} + a_{35} \Delta \delta_j + a_{37} \Delta E'_{qj} \tag{2-30}$$

where

$$a_{31} = -K_i K_{5i} / T_i F_3$$

$$a_{33} = -1 / T_i$$

$$a_{34} = -K_i K_{6i} / T_i F_3$$

$$a_{35} = -K_i C_3 K_{5j} / T_i F_3$$

$$a_{37} = -K_i C_3 K_{6j} / T_i F_3$$

Also from Fig. 2-4 the internal voltage may be written

$$\Delta E'_{qi} = K_{3i} (\Delta E_{fDi} - K_{4i} \Delta \delta_i - C_2 \Delta V_o) / (1 + ST'_i K_{3i}) \tag{2-31}$$

Substituting the value of ΔV_o into (2-31), we have

$$\Delta \dot{E}'_{qi} = a_{41} \Delta \delta_i + a_{43} \Delta E_{fDi} + a_{44} \Delta E'_{qi} + a_{45} \Delta \delta_j + a_{47} \Delta E'_{qj} \tag{2-32}$$

where

$$a_{41} = -(K_{4i} + C_2 B_3 K_{5i}/F_3) / T'_i$$

$$a_{43} = 1 / T'_i$$

$$a_{44} = -(1/K_{3i} + C_2 B_3 K_{6i}/F_3) / T'_i$$

$$a_{45} = -C_2 K_{5j} / T'_i F_3$$

$$a_{47} = -C_2 K_{6j} / T'_i F_3$$

From Fig. 2-6 the state variables of the unknown system can be similarily determined

$$\Delta \omega_j = -(K_{1j} \Delta \delta_j + K_{2j} \Delta E'_{qj} + B_1 \Delta V_t) / (M_j S + D_j) \tag{2-33}$$

$$\Delta E'_{qj} = K_{3j} (K_{4j} \Delta \delta_j + B_2 \Delta V_t) / (1 + ST'_j K_{3j}) \tag{2-34}$$

Substituting the value of ΔV_t from (2-26) into equations (2-33) and (2-34), we have

$$\Delta \dot{\omega}_j = a_{61} \Delta \delta_i + a_{64} \Delta E'_{qi} + a_{65} \Delta \delta_j + a_{66} \Delta \omega_j + a_{67} \Delta E'_{qj} \tag{2-35}$$

where

$$a_{61} = -B_1 K_{5i} / M_j F_3$$

$$a_{64} = -B_1 K_{6i} / M_j F_3$$

$$a_{65} = -(K_{1j} + B_1 C_3 K_{5j}/F_3) / M_j$$

$$a_{66} = -D_j / M_j$$

$$a_{67} = -(K_{2j} + B_1 C_3 K_{6j}/F_3) / M_j$$

And

$$\Delta \dot{E}'_{qj} = a_{71} \Delta \delta_i + a_{74} \Delta E'_{qi} + a_{75} \Delta \delta_j + a_{77} \Delta E'_{qj} \tag{2-36}$$

where

$$a_{71} = B_2 K_{5i} / T'_j F_3$$

$$a_{74} = B_2 K_{6i} / T'_j F_3$$

$$a_{75} = (K_{4j} + B_2 C_3 K_{5j}/F_3) / T'_j$$

$$a_{77} = -(1/K_{3j} - B_2 C_3 K_{6j}/F_3) / T'_j$$

For the purpose of estimation, the terminal voltage ΔV_t of the ith system is chosen as the variable to be measured, which does satisfy the observation condition

$$\Delta V_t = h_1 \Delta \delta_i + h_4 \Delta E'_{qi} + h_5 \Delta \delta_j + h_7 \Delta E'_{qj} \tag{2-37}$$

where h_1 to h_7 can be found directly from equation (2-26). Hence, the state variable representation for the overall system is as follows

$$\dot{X} = A X + P V$$

Or

$$\begin{bmatrix} \Delta \dot{\delta}_i \\ \Delta \dot{\omega}_i \\ \Delta \dot{E}_{fDi} \\ \Delta \dot{E}'_{qi} \\ \Delta \dot{\delta}_j \\ \Delta \dot{\omega}_j \\ \Delta \dot{E}'_{qj} \end{bmatrix} = \begin{bmatrix} 0 & 377 & 0 & 0 & 0 & 0 & 0 \\ a_{21} & a_{22} & 0 & a_{24} & a_{25} & 0 & a_{27} \\ a_{31} & 0 & a_{33} & a_{34} & a_{35} & 0 & a_{37} \\ a_{41} & 0 & a_{43} & a_{44} & a_{45} & 0 & a_{47} \\ 0 & 0 & 0 & 0 & 0 & 377 & 0 \\ a_{61} & 0 & 0 & a_{64} & a_{65} & a_{66} & a_{67} \\ a_{71} & 0 & 0 & a_{74} & a_{75} & 0 & a_{77} \end{bmatrix} \begin{bmatrix} \Delta \delta_i \\ \Delta \omega_i \\ \Delta E_{fDi} \\ \Delta E'_{qi} \\ \Delta \delta_j \\ \Delta \omega_j \\ \Delta E'_{qj} \end{bmatrix} + P V$$

And $$Y = H X$$

or $$\Delta V_t = [h_1 \quad 0 \quad 0 \quad h_4 \quad h_5 \quad 0 \quad h_7] \begin{bmatrix} \Delta \delta_i \\ \Delta \omega_i \\ \Delta E_{fDi} \\ \Delta E'_{qi} \\ \Delta \delta_j \\ \Delta \omega_j \\ \Delta E'_{qj} \end{bmatrix}$$

Some system matrix elements are already known for any given operating condition. The others are functions of the unknown parameters X_j, X'_j, M_j, D_j and T'_j to be estimated.

2.4 The Initial Values

From the computation of the constants in the previous sections, the initial values of the machines must be known. From the phasor diagram in the classic books on A.C. machines Fig. 2-7, the internal phase angle γ_{io} can be found first and then the current and voltage components can be found as follows.

$$\phi_{io} = \cos^{-1} \frac{P_{io}}{V_{to} I_{io}} \tag{2-38}$$

$$\gamma_{io} = \tan^{-1} \frac{I_{io} X_q \cos \phi_{io}}{V_{to} + I_{io} X_q \sin \phi_{io}} \tag{2-39}$$

$$I_{dio} = I_{io} \sin (\gamma_{io} + \phi_{io}) \tag{2-40}$$

$$I_{qio} = I_{io} \cos (\gamma_{io} + \phi_{io}) \tag{2-41}$$

$$V_{tdo} = V_{to} \sin \gamma_{io} \tag{2-42}$$

$$V_{tqo} = V_{to} \cos \gamma_{io} \tag{2-43}$$

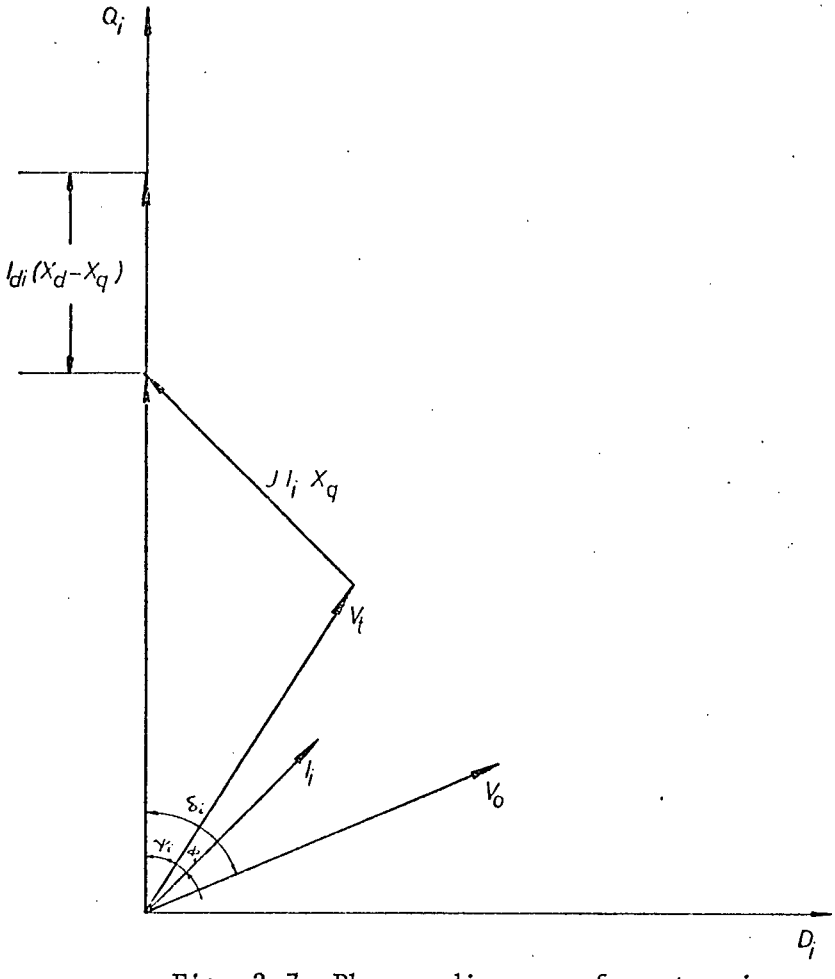

Fig. 2-7 Phasor diagram of system i

$$E'_{qio} = V_{tqo} + I_{dio} X'_d \tag{2-44}$$

$$\overline{V}_o = (1 + \overline{Y}\,\overline{Z})\,\overline{V}_{to} - \overline{I}_{io}\,\overline{Z}$$

$$= V_{do} + j\,V_{qo} \tag{2-45}$$

$$\delta_{io} = 90 - \tan^{-1}\frac{V_{qo}}{V_{do}} \tag{2-46}$$

Similarly, for the jth machine we have

$$\phi_{jo} = \cos^{-1}\frac{P_{jo}}{V_o\,I_{jo}} \tag{2-47}$$

$$\psi_{jo} = \tan^{-1}\frac{I_{jo}\,X_j\,\cos\phi_{jo}}{V_o - I_{jo}\,X_j\,\sin\phi_{jo}} \tag{2-48}$$

$$\overline{I}_{jo} = \overline{I}_{io} - \overline{Y}\,\overline{V}_{to} \tag{2-49}$$

$$I_{djo} = -I_{jo} \sin (\psi_{jo} - \phi_{jo}) \tag{2-50}$$

$$I_{qjo} = I_{jo} \cos (\psi_{jo} - \phi_{jo}) \tag{2-51}$$

$$V_{odj} = -V_o \sin \psi_{jo} \tag{2-52}$$

$$V_{oqj} = V_o \cos \psi_{jo} \tag{2-53}$$

$$E'_{qjo} = V_{oq} - I_{djo} X'_j \tag{2-54}$$

$$E_{jo} = V_{oq} - I_{djo} X_j \tag{2-55}$$

$$\delta_{jo} = \psi_{jo} + \delta_{io} - \psi_{io} \tag{2-56}$$

CHAPTER 3

ESTIMATION OF UNKNOWN SYSTEM PARAMETERS

In this chapter, the method of least-squares estimation and its application to the model developed in Chapter 2 will be presented. In this method, the values of some of the parameters in the mathematical model of the system are adjusted until the calculated values, which are a function of the state variables, agree with those measured on the actual system. In other words, if y_m is the measured value of the actual system and y_c is the calculated value from the mathematical model, where both of them are time varying, then the method is to find the values of the parameters in the mathematical model which minimize the difference between y_m and y_c throughout a given time period.

3.1 Mathematical Formulation

As shown in Chapter 2, the state variable vector of the model is

$$X = [\Delta \delta_i, \Delta \omega_i, \Delta E_{fDi}, \Delta E'_{qi}, \Delta \delta_j, \Delta \omega_j, \Delta E'_{qj}]^T ,$$

and the parameter vector is

$$\alpha = [X_j, X'_j, M_j, D_j, T'_j]^T$$

The model is described by

$$\dot{X}(\alpha) = A(\alpha)\ X(\alpha) + P\ V \tag{3-1}$$

$$y_c(\alpha) = H(\alpha)\ X(\alpha) \tag{3-2}$$

Note that not all the matrix elements depend directly or indirectly upon the parameter vector α.

As in optimal control theory α should be chosen to decrease a cost index J of the form

$$J(\alpha) = \frac{1}{2} \int_{t_o}^{t_f} e^T(\alpha)\ R\ e(\alpha)\ dt \tag{3-3}$$

where $e(\alpha) \triangleq y_m - y_c(\alpha)$ (3-4)

t_o: Initial time

t_f: Final time

R : Positive value

Expanding $y_c(\alpha)$ about a given initial value α_o in a Taylor series and neglecting the higher order terms, we get

$$y_c(\alpha) \simeq y_c(\alpha_o) + \left(\frac{\partial y_c(\alpha)}{\partial \alpha}\right)_{\alpha_o} \Delta\alpha \tag{3-5}$$

where $\Delta \alpha = \alpha - \alpha_o$

From equations (3-3) and (3-5)

$$J(\alpha) \doteq \frac{1}{2} \int_{t_o}^{t_f} [(y_m - y_c(\alpha_o) - \left(\frac{\partial y_c(\alpha)}{\partial \alpha}\right)_{\alpha_o} \Delta\alpha)^T R$$

$$(y_m - y_c(\alpha_o) - \left(\frac{\partial y_c(\alpha)}{\partial \alpha}\right)_{\alpha_o} \Delta\alpha)] \, dt \tag{3-6}$$

$J(\alpha)$ is minimized with respect to $\Delta\alpha$

$$\frac{\partial J(\alpha)}{\partial \Delta \alpha} = 0 \tag{3-7}$$

Hence

$$\Delta\alpha = \int_{t_o}^{t_f} [\left(\frac{\partial y_c(\alpha)}{\partial \alpha}\right)_{\alpha_o}^T R \, (y_m - y_c(\alpha_o))] \, dt \Big/ \int_{t_o}^{t_f} [\left(\frac{\partial y_c(\alpha)}{\partial \alpha}\right)_{\alpha_o}^T R \left(\frac{\partial y_c(\alpha)}{\partial \alpha}\right)_{\alpha_o}] \, dt \tag{3-8}$$

The parameter vector α is then updated

$$\alpha_1 \Rightarrow \alpha_o + k \, \Delta\alpha \tag{3-9}$$

where k is the step size or gain value and has to be chosen according to certain criterion.

3.2 Evaluation of the Integrals

Parital differentiation of equation (3-2) with respect to α gives

$$\left(\frac{\partial\, y_c(\alpha)}{\partial\, \alpha}\right)_{\alpha_o} = H(\alpha_o)\left(\frac{\partial\, X(\alpha)}{\partial\, \alpha}\right)_{\alpha_o} + \left(\frac{\partial\, H(\alpha)}{\partial\, \alpha}\right)_{\alpha_o} X(\alpha_o) \tag{3-10}$$

where $\left(\frac{\partial\, X(\alpha)}{\partial\, \alpha}\right)_{\alpha_o}$ can be found from equation (3-1) as follows

$$\frac{d}{dt}\left(\frac{\partial\, X(\alpha)}{\partial\, \alpha}\right)_{\alpha_o} = A(\alpha_o)\left(\frac{\partial\, X(\alpha)}{\partial\, \alpha}\right)_{\alpha_o} + \left(\frac{\partial\, A(\alpha)}{\partial\, \alpha}\right) X(\alpha_o) \tag{3-11}$$

where $\frac{\partial P}{\partial \alpha}$, $\frac{\partial V}{\partial \alpha}$, $\left(\frac{\partial\, X(\alpha)}{\partial\, \alpha}\right)_{\alpha_o,\, t_o} = 0$ (3-12)

All the partial derivatives of $A(\alpha)$ and $H(\alpha)$ with respect to α will be derived in section 3-3.

With equations (3-10) and (3-11) and assuming we have R and t_f, $\Delta\alpha$ can be found from equation (3-8).

3.3 Partial Derivatives of $A(\alpha)$ and $H(\alpha)$

$A(\alpha)$ and $H(\alpha)$ are function of K_s', B_s' and C_s' which are in turn functions of f_s', g_s', y_s' and z_s'. To find those partial derivatives some current, voltage and phase angle partial derivatives must be found first.

Fig. 3-1 shows the phasor diagram of the dynamic infinite-system discussed in Chapter 2. From the diagram we have

$$\delta_j = \psi_j + \gamma \tag{3-13}$$

where γ is constant as long as V_o, V_t, and I_j are constants. Therefore

$$\frac{\partial\, \delta_j}{\partial\, \alpha} = \frac{\partial\, \psi_j}{\partial\, \alpha} \tag{3-14}$$

The partial derivatives of voltage V_o and current I_j with respect to α are zero because these are directly measurable values. However, this statement does not apply to their d and q components with respect to X_j.

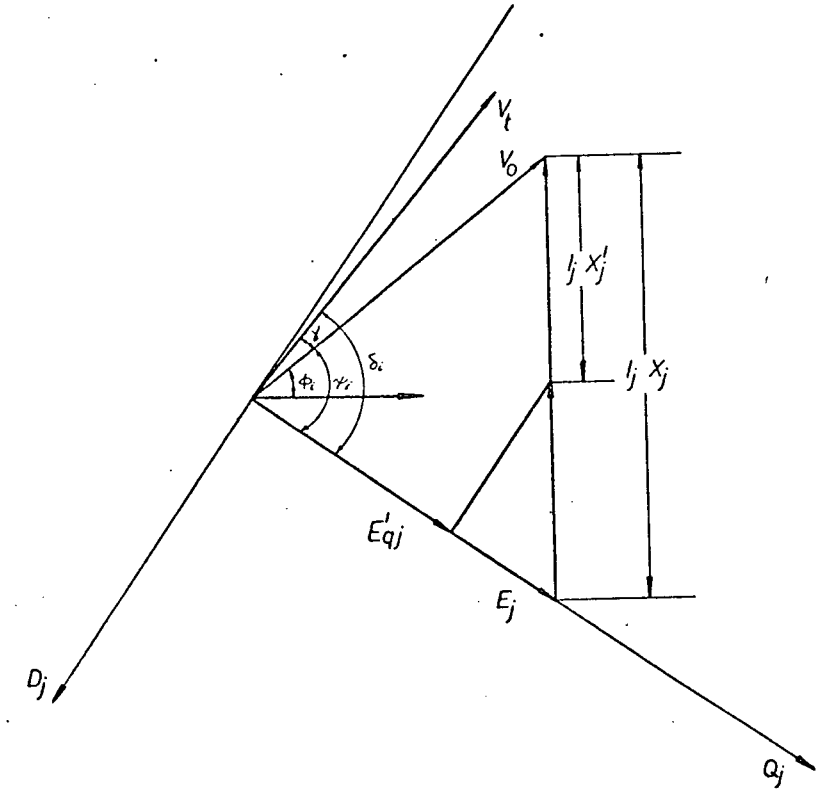

Fig. 3-1 Phasor diagram of the unknown system

From the phasor diagram, the following derivatives can be obtained

$$\frac{\partial \delta_j}{\partial \alpha} = 0; \qquad \text{except} \quad \frac{\partial \delta_j}{\partial X_j} = \frac{I_{qj}}{E_j} \tag{3-15}$$

$$\frac{\partial E'_{qj}}{\partial \alpha} = 0; \qquad \text{except} \quad \frac{\partial E'_{qj}}{\partial X_j} = -(X_j - X'_j)\frac{I_{qj}^2}{E_j}$$

$$\text{and} \quad \frac{\partial E'_{qj}}{\partial X_j'} = -I_{dj} \tag{3-16}$$

$$\frac{\partial E_j}{\partial X_j} = 0; \qquad \text{except} \quad \frac{\partial E_j}{\partial X_j} = -I_{dj} \tag{3-17}$$

$$\frac{\partial V_o}{\partial \alpha} = 0 \tag{3-18}$$

$$\frac{\partial I_j}{\partial \alpha} = 0 \tag{3-19}$$

$$\frac{\partial V_{odj}}{\partial \alpha} \equiv 0; \qquad \text{except} \quad \frac{\partial V_{odj}}{\partial X_j} = -I_{qj}\left(1 + \frac{X_j I_{dj}}{E_j}\right) \tag{3-20}$$

$$\frac{\partial V_{oqj}}{\partial \alpha} = 0; \qquad \text{except} \quad \frac{\partial V_{oqj}}{\partial X_j} = -X_j \frac{I_{qj}^2}{E_j} \tag{3-21}$$

$$\frac{\partial I_{dj}}{\partial \alpha} = 0; \qquad \text{except} \quad \frac{\partial I_{dj}}{\partial X_j} = -\frac{I_{qj}^2}{E_j} \tag{3-22}$$

$$\frac{I_{qj}}{\partial \alpha} = 0; \qquad \text{except} \quad \frac{\partial I_{qj}}{\partial X_j} = \frac{I_{qj} I_{dj}}{E_j} \tag{3-23}$$

Next we have

$$\frac{\partial Y_{1j}}{\partial \alpha} = \frac{\partial Y_{2j}}{\partial \alpha} = 0 \text{ except } \frac{\partial Y_{1j}}{\partial X_j} = \frac{1}{Z_j^2}\left(\frac{X_e X_e'}{Z_j^2} - 1\right) \tag{3-24}$$

$$\frac{\partial Y_{1j}}{\partial X_j'} = \frac{X_e^2}{Z_j^4} \tag{3-25}$$

$$\frac{\partial Y_{2j}}{\partial X_j} = \frac{R X_e'}{Z_j^4} \tag{3-26}$$

$$\frac{\partial Y_{2j}}{\partial X_j'} = \frac{R X_e}{Z_j^4} \tag{3-27}$$

With the partial derivatives obtained so far, we may obtain

$$\frac{\partial f_{dj}}{\partial \alpha} = \frac{\partial f_{qj}}{\partial \alpha} = 0; \qquad \text{except}$$

$$\frac{\partial f_{dj}}{\partial X_j} = -\frac{V_t}{Z_j^2}\left[\frac{I_{qj}}{E_j}(X_e \cos\delta_j - R \sin\delta_j) - \frac{X_e'}{Z_j^2}(R \cos\delta_j + X_e \sin\delta_j) + \sin\delta_j\right] \tag{3-28}$$

$$\frac{\partial f_{dj}}{\partial X_j'} = \frac{V_t X_e}{Z_j^4}(R \cos\delta_j + X_e \sin\delta_j) \tag{3-29}$$

$$\frac{\partial f_{qj}}{\partial X_j} = -\frac{V_t}{Z_j^2}\left[\frac{I_{qj}}{E_j}(X'_e \sin\delta_j + R\cos\delta_j) + \frac{X'_e}{Z_j^2}(X'_e\cos\delta_j - R\sin\delta_j)\right] \tag{3-30}$$

$$\frac{\partial f_{qj}}{\partial X'_j} = -\frac{V_t}{Z_j^2}\left[\frac{X_e}{Z_j^2}(X'_e\cos\delta_j - R\sin\delta_j) - \cos\delta_j\right] \tag{3-31}$$

$$\frac{\partial g_{dj}}{\partial \alpha} = \frac{\partial g_{qj}}{\partial \alpha} = 0; \qquad \text{except}$$

$$\frac{\partial g_{dj}}{\partial X_j} = \frac{1}{Z_j^2}\left[-\frac{I_{qj}}{E_j}(R\cos\delta_j + X_e\sin\delta_j) + \frac{X'_e}{Z_j^2}(R\sin\delta_j - X_e\cos\delta_j) + \cos\delta_j\right] \tag{3-32}$$

$$\frac{\partial g_{dj}}{\partial X'_j} = \frac{X_e}{Z_j^4}(R\sin\delta_j - X_e\cos\delta_j) \tag{3-33}$$

$$\frac{\partial g_{qj}}{\partial X_j} = \frac{1}{Z_j^2}\left[\frac{I_{qj}}{E_j}(X'_e\cos\delta_j - R\sin\delta_j) - \frac{X'_e}{Z_j^2}(X'_e\sin\delta_j + R\cos\delta_j)\right] \tag{3-34}$$

$$\frac{\partial g_{qj}}{\partial X'_j} = \frac{1}{Z_j^2}\left[-\frac{X_e}{Z_j^2}(X'_e\sin\delta_j + R\cos\delta_j) + \sin\delta_j\right] \tag{3-35}$$

Next we have

$$\frac{\partial K_{mj}}{\partial \alpha} = 0, \qquad m = 1, \ldots 6; \quad \text{except}$$

$$\begin{aligned}\frac{\partial K_{1j}}{\partial X_j} = {} & f_{qj}\frac{\partial E'_{qj}}{\partial X_j} + E'_{qj}\frac{\partial f_{qj}}{\partial X_j} - (X_j - X'_j)\left(I_{dj}\frac{\partial f_{qj}}{\partial X_j}\right. \\ & \left. + f_{qj}\frac{\partial I_{dj}}{\partial X_j} + I_{qj}\frac{\partial f_{dj}}{\partial X_j} + f_{dj}\frac{\partial I_{qj}}{\partial X_j}\right) - f_{qj}I_{dj} \\ & - f_{dj}I_{qj}\end{aligned} \tag{3-36}$$

$$\begin{aligned}\frac{\partial K_{1j}}{\partial X'_j} = {} & f_{qj}\frac{\partial E'_{qj}}{\partial X'_j} + E'_{qj}\frac{\partial f_{dj}}{\partial X'_j} - (X_j - X'_j)\left(I_{dj}\frac{\partial f_{qj}}{\partial X'_j}\right. \\ & \left. + I_{qj}\frac{\partial f_{dj}}{\partial X'_j}\right) + f_{qj}I_{dj} + f_{dj}I_{qj}\end{aligned} \tag{3-37}$$

$$\frac{\partial K_{2j}}{\partial X_j} = Y_{2j} \frac{\partial E'_{qj}}{\partial X_j} + E'_{qj} \frac{\partial Y_{2j}}{\partial X_j} + \frac{\partial I_{qj}}{\partial X_j} - (X_j - X'_j) \left(Y_{1j} \frac{\partial I_{qj}}{\partial X_j} + I_{qj} \frac{\partial Y_{1j}}{\partial X_j} + Y_{2j} \frac{\partial I_{dj}}{\partial X_j} + I_{dj} \frac{\partial Y_{2j}}{\partial X_j}\right) - Y_{2j} I_{dj} - Y_{1j} I_{qj} \tag{3-38}$$

$$\frac{\partial K_{2j}}{\partial X'_j} = Y_{2j} \frac{\partial E'_{qj}}{\partial X'_j} + E'_{qj} \frac{\partial Y_{2j}}{\partial X'_j} - (X_j - X'_j) \left(I_{qj} \frac{\partial Y_{1j}}{\partial X'_j} + I_{dj} \frac{\partial Y_{2j}}{\partial X'_j}\right) + I_{dj} Y_{2j} + I_{qj} Y_{1j} \tag{3-39}$$

$$\frac{\partial K_{3j}}{\partial X_j} = K_{3j}^2 \left(Y_{1j} + (X_j - X'_j) \frac{\partial Y_{1j}}{\partial X_j}\right) \tag{3-40}$$

$$\frac{\partial K_{3j}}{\partial X'_j} = K_{3j}^2 \left(-Y_{1j} + (X_j - X'_j) \frac{\partial Y_{1j}}{\partial X'_j}\right) \tag{3-41}$$

$$\frac{\partial K_{4j}}{\partial X'_j} = f_{dj} + (X_j - X'_j) \frac{\partial f_{dj}}{\partial X_j} \tag{3-42}$$

$$\frac{\partial K_{4j}}{\partial X'_j} = -f_{dj} + (X_j - X'_j) \frac{\partial f_{dj}}{\partial X'_j} \tag{3-43}$$

$$\frac{\partial K_{5j}}{\partial X_j} = \frac{1}{V_o} \left(X'_j V_{oqj} \frac{\partial f_{dj}}{\partial X_j} + X'_j f_{dj} \frac{\partial V_{oqj}}{\partial X_j} - V_{odj} f_{qj} - X_j V_{odj} \frac{\partial f_{qj}}{\partial X_j} - X_j f_{qj} \frac{\partial V_{odj}}{\partial X_j}\right) \tag{3-44}$$

$$\frac{\partial K_{5j}}{\partial X'_j} = \frac{1}{V_o} \left(X'_j V_{oqj} \frac{\partial f_{dj}}{\partial X'_j} + V_{oqj} f_{dj} - X_j V_{odj} \frac{\partial f_{qj}}{\partial X'_j}\right) \tag{3-45}$$

$$\frac{\partial K_{6j}}{\partial X'_j} = \frac{1}{V_o} \left((1 + X'_j Y_{1j}) \frac{\partial V_{oqj}}{\partial X_j} + V_{oqj} X'_j \frac{\partial Y_{1j}}{\partial X_j} - V_{odj} Y_{2j} - X_j V_{odj} \frac{\partial Y_{2j}}{\partial X_j} - X_j Y_{2j} \frac{\partial V_{odj}}{\partial X'_j}\right) \tag{3-46}$$

$$\frac{\partial K_{6j}}{\partial X'_j} = \frac{1}{V_o}\left(V_{oqj} X'_j \frac{\partial Y_{1j}}{\partial X'_j} + V_{oqj} Y_{1j} - V_{odj} X_j \frac{\partial Y_{2j}}{\partial X'_j}\right) \tag{3-47}$$

Also $\frac{\partial B_m}{\partial \alpha} = 0, \quad m = 1, 2, 3;$ except

$$\frac{\partial B_1}{\partial X_j} = g_{qj} \frac{\partial E'_{qj}}{\partial X_j} + E'_{qj} \frac{\partial g_{qj}}{\partial X_j} - (X_j - X'_j)\left(g_{dj} \frac{\partial I_{qj}}{\partial X_j} + I_{qj} \frac{\partial g_{dj}}{\partial X_j} + g_{qj} \frac{\partial I_{dj}}{\partial X_j} + I_{dj} \frac{\partial g_{qj}}{\partial X_j}\right) - g_{qj} I_{dj} - g_{dj} I_{qj} \tag{3-48}$$

$$\frac{\partial B_1}{\partial X'_j} = g_{qj} \frac{\partial E'_{qj}}{\partial X'_j} + E'_{qj} \frac{\partial g_{qj}}{\partial X'_j} - (X_j - X'_j)\left(I_{dj} \frac{\partial g_{qj}}{\partial X'_j} + I_{qj} \frac{\partial g_{dj}}{\partial X'_j}\right) + g_{dj} I_{qj} + g_{qj} I_{dj} \tag{3-49}$$

$$\frac{\partial B_2}{\partial X_j} = g_{dj} + (X_j - X'_j) \frac{\partial g_{dj}}{\partial X_j} \tag{3-50}$$

$$\frac{\partial B_2}{\partial X'_j} = -g_{dj} + (X_j - X'_j) \frac{\partial g_{dj}}{\partial X'_j} \tag{3-51}$$

$$\frac{\partial B_3}{\partial X_j} = \frac{1}{V_o}\left(X'_j V_{oqj} \frac{\partial g_{dj}}{\partial X_j} + X'_j g_{dj} \frac{\partial V_{oqj}}{\partial X_j} - V_{odj} X_j \frac{\partial g_{qj}}{\partial X_j} - V_{odj} g_{qj} - X_j g_{qj} \frac{\partial V_{odj}}{\partial X_j}\right) \tag{3-52}$$

$$\frac{\partial B_3}{\partial X'_j} = \frac{1}{V_o}\left(X'_j V_{oqj} \frac{\partial g_{dj}}{\partial X'_j} + V_{oqj} g_{dj} - V_{odj} X_j \frac{\partial g_{qj}}{\partial X'_j}\right) \tag{3-53}$$

Next we have for the matrix $A(\alpha)$ the following derivatives.

$$\frac{\partial a_{ij}}{\partial \alpha} = 0, \qquad i, j = 1, \ldots, 7; \qquad \text{except}$$

$$\frac{\partial a_{21}}{\partial X_j} = -\frac{C_1 K_{5i}}{M_i F_3^2} \frac{\partial B_3}{\partial X_j} \tag{3-54}$$

$$\frac{\partial a_{24}}{\partial X_j} = -\frac{C_1 K_{6i}}{M_i F_3^2} \frac{\partial B_3}{\partial X_j} \tag{3-55}$$

$$\frac{\partial a_{25}}{\partial X_j} = -\frac{C_1}{M_i F_3} \left(\frac{\partial K_{5j}}{\partial X_j} + \frac{K_{5j} C_3}{F_3} \frac{\partial B_3}{\partial X_j}\right) \tag{3-56}$$

$$\frac{\partial a_{27}}{\partial X_j} = -\frac{C_1}{M_i F_3} \left(\frac{\partial K_{6j}}{\partial X_j} + \frac{K_{6j} C_3}{F_3} \frac{\partial B_3}{\partial X_j}\right) \tag{3-57}$$

$$\frac{\partial a_{31}}{\partial X_j} = -\frac{K_i K_{5i} C_3}{T_i F_3^2} \frac{\partial B_3}{\partial X_j} \tag{3-58}$$

$$\frac{\partial a_{34}}{\partial X_j} = -\frac{K_i K_{6i} C_3}{T_i F_3^2} \frac{\partial B_3}{\partial X_j} \tag{3-59}$$

$$\frac{\partial a_{35}}{\partial X_j} = -\frac{K_i C_3}{T_i F_3} \left(\frac{\partial K_{5j}}{\partial X_j} + \frac{K_{5j} C_3}{F_3} \frac{\partial B_3}{\partial X_j}\right) \tag{3-60}$$

$$\frac{\partial a_{37}}{\partial X_j} = -\frac{K_i C_3}{T_i F_3} \left(\frac{\partial K_{6j}}{\partial X_j} + \frac{K_{6j} C_3}{F_3} \frac{\partial B_3}{\partial X_j}\right) \tag{3-61}$$

$$\frac{\partial a_{41}}{\partial X_j} = -\frac{K_{5i} C_2}{T_i' F_3^2} \frac{\partial B_3}{\partial X_j} \tag{3-62}$$

$$\frac{\partial a_{44}}{\partial X_j} = -\frac{K_{6i} C_2}{T_i' F_3^2} \frac{\partial B_3}{\partial X_j} \tag{3-63}$$

$$\frac{\partial a_{45}}{\partial X_j} = -\frac{C_2}{T_i' F_3} \left(\frac{\partial K_{5j}}{\partial X_j} + \frac{K_{5j} C_3}{F_3} \frac{\partial B_3}{\partial X_j}\right) \tag{3-64}$$

$$\frac{\partial a_{47}}{\partial X_j} = -\frac{C_2}{T_i' F_3} \left(\frac{\partial K_{6j}}{\partial X_j} + \frac{K_{6j} C_3}{F_3} \frac{\partial B_3}{\partial X_j}\right) \tag{3-65}$$

$$\frac{\partial a_{61}}{\partial X_j} = -\frac{K_{5i}}{M_j F_3} \left(\frac{\partial B_1}{\partial X_j} + \frac{C_3 B_1}{F_3} \frac{\partial B_3}{\partial X_j}\right) \tag{3-66}$$

$$\frac{\partial a_{64}}{\partial X_j} = -\frac{K_{6i}}{M_j F_3} \left(\frac{\partial B_1}{\partial X_j} + \frac{C_3 B_1}{F_3} \frac{\partial B_3}{\partial X_j}\right) \tag{3-67}$$

$$\frac{\partial a_{65}}{\partial X_j} = -\frac{1}{M_j} \left[\frac{\partial K_{1j}}{\partial X_j} + \frac{C_3}{F_3} \left(B_1 \frac{\partial K_{5j}}{\partial X_j} + K_{5j} \frac{\partial B_1}{\partial X_j} + \frac{K_{5j} B_1 C_3}{F_3} \frac{\partial B_3}{\partial X_j}\right)\right] \tag{3-68}$$

$$\frac{\partial a_{67}}{\partial X_j} = -\frac{1}{M_j} \left[\frac{\partial K_{2j}}{\partial X_j} + \frac{C_3}{F_3} \left(B_1 \frac{\partial K_{6j}}{\partial X_j} + K_{6j} \frac{\partial B_1}{\partial X_j} + \frac{K_{6j} B_1 C_3}{F_3} \frac{\partial B_3}{\partial X_j}\right)\right] \tag{3-69}$$

$$\frac{\partial a_{71}}{\partial X_j} = \frac{K_{5i}}{T_j' F_3} \left(\frac{\partial B_2}{\partial X_j} + \frac{B_2 C_3}{F_3} \frac{\partial B_3}{\partial X_j}\right) \tag{3-70}$$

$$\frac{\partial a_{74}}{\partial X_j} = \frac{K_{6i}}{T'_j F_3} \left(\frac{\partial B_2}{\partial X_j} + \frac{B_2 C_3}{F_3} \frac{\partial B_3}{\partial X_j}\right) \tag{3-71}$$

$$\frac{\partial a_{75}}{\partial X_j} = \frac{1}{T'_j} \left[\frac{\partial K_{4j}}{\partial X_j} + \frac{C_3}{F_3} \left(B_2 \frac{\partial K_{5j}}{\partial X_j} + K_{5j} \frac{\partial B_2}{\partial X_j} + \frac{K_{5j} B_2 C_3}{F_3} \frac{\partial B_3}{\partial X_j}\right)\right] \tag{3-72}$$

$$\frac{\partial a_{77}}{\partial X_j} = \frac{1}{T'_j} \left[\frac{1}{K_{3j}^2} \frac{\partial K_{3j}}{\partial X_j} + \frac{C_3}{F_3} \left(B_2 \frac{\partial K_{6j}}{\partial X_j} + K_{6j} \frac{\partial B_2}{\partial X_j} + \frac{K_{6j} B_2 C_3}{F_3} \frac{\partial B_3}{\partial X_j}\right)\right] \tag{3-73}$$

Similar results may be obtained for $\frac{\partial A(\alpha)}{\partial X'_j}$.

Also $$\frac{\partial a_{6k}}{\partial M_j} = -\frac{a_{6k}}{M_j}, \qquad k = 1, 4, 5, 6 \text{ and } 7 \tag{3-74}$$

$$\frac{\partial a_{66}}{\partial D_j} = -\frac{1}{M_j} \tag{3-75}$$

$$\frac{\partial a_{7k}}{\partial T'_j} = -\frac{a_{7k}}{T'_j}, \qquad K = 1, 4, 5 \text{ and } 7 \tag{3-76}$$

Finally for the vector $H(\alpha)$, the derivatives are as follows

$$\frac{\partial h_i}{\partial \alpha} = 0, \qquad i = 1, \ldots, 7; \qquad \text{except}$$

$$\frac{\partial h_1}{\partial X_j} = \frac{K_{5i} C_3}{F_3^2} \frac{\partial B_3}{\partial X_j} \tag{3-77}$$

$$\frac{\partial h_4}{\partial X_j} = \frac{K_{6i} C_3}{F_3^2} \frac{\partial B_3}{\partial X_j} \tag{3-78}$$

$$\frac{\partial h_5}{\partial X_j} = \frac{C_3}{F_3} \left(\frac{\partial K_{5j}}{\partial X_j} + \frac{K_{5j} C_3}{F_3} \frac{\partial B_3}{\partial X_j}\right) \tag{3-79}$$

$$\frac{\partial h_7}{\partial X_j} = \frac{C_3}{F_3} \left(\frac{\partial K_{6j}}{\partial X_j} + \frac{K_{6j} C_3}{F_3} \frac{\partial B_3}{\partial X_j}\right) \tag{3-80}$$

Similar results may be obtained for $\frac{\partial H(\alpha)}{\partial X_j'}$.

CHAPTER 4

ALGORITHM, DATA AND RESULTS

In this chapter, the algorithm for computation is developed. Numerical examples are included, and the results are presented.

4.1 Algorithm

A flow chart of the estimation algorithm is shown in Fig. 4.1. There are three loops. In the first loop the two differential equations (3-1) and (3-11) are solved by the Runge-Kutta method, and the two integrations in equation (3-8) are calculated using the trapezoidal method of integration. All calculations are made with the time step Δt of 0.05 or 0.1 seconds.

The value of R is chosen to be 10. Being scalar it makes no difference whether R is chosen to be 10 or 100.

In the second loop, the estimated parameter values are updated. The step size factor k_i must be chosen carefully, an excessively large value may cause α_i to overshoot and diverge, whereas a small value may cause very slow convergence. In the program k_i is chosen as follows

1. If $|\Delta\alpha_i/\alpha_i| > \zeta$, $k_i = k_1 |\alpha_i/\Delta\alpha_i|$
2. If $|\Delta\alpha_i/\alpha_i| \leq \zeta$ $k_i = k_2$

where ζ is chosen to be 0.3, k_1 in the range of 0.10 to 0.45 and k_2 in the neighborhood of 1.0

The third loop iterates the estimation until all the unknown parameter values have converged, with the maximum number of iterations restricted to 25.

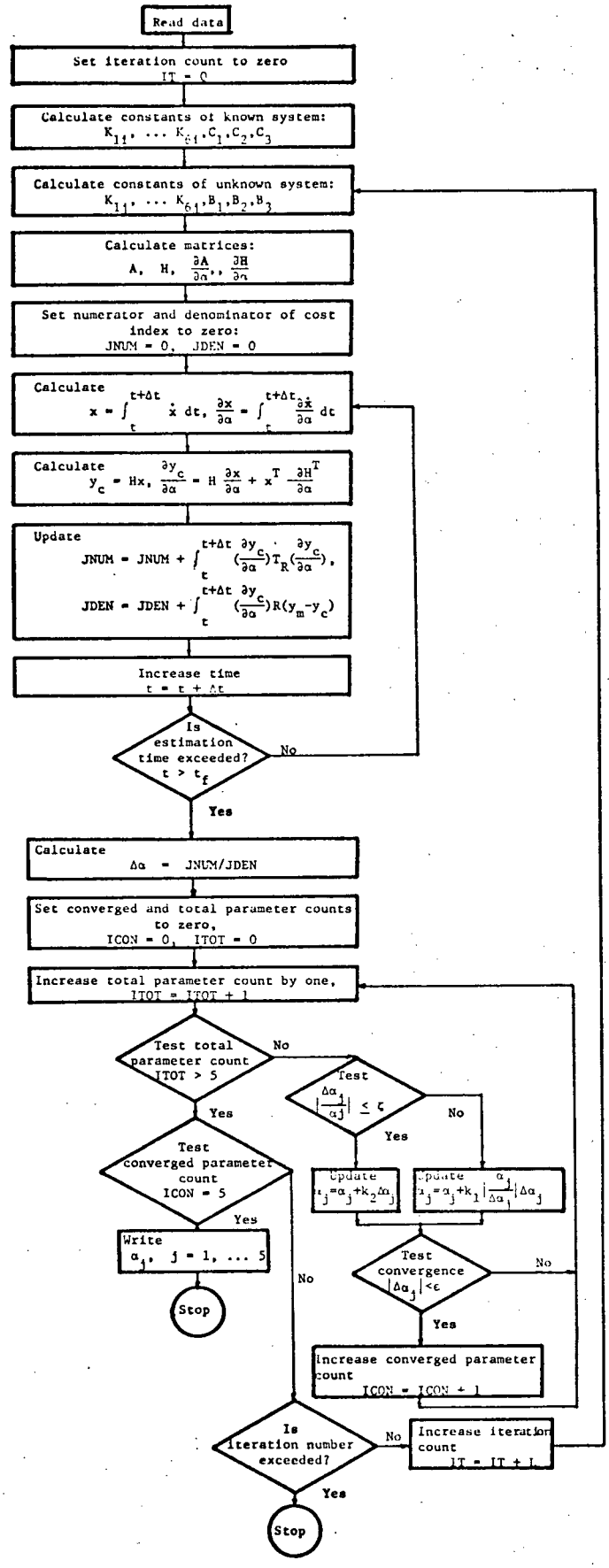

Fig. 4-1 Flow chart of the estimation algorithm.

4.2 Data

The system has the following data.

1. Generator, exciter and voltage regulator of the known system in per unit

$P_i = 0.9$ $V_t = 1.05$ $X_q = 0.6$

$X_d = 1.0$ $X'_d = 0.1$ $M_i = 5.0$

$D_i = 10.0$ $T'_i = 7.8$ $T_i = 0.05$ $K_i = 20.0$

2. Transmission line

$R = 0.04$ $X = 0.5$

3. ΔV_t is pre-recorded as Fig. 4-2. A ΔT_m of 20% for 0.1 second is applied to disturb the system dynamically.

4. System operating conditions

	Generator			local load	
	P_i	V_t	PF	G	PF
A1	0.9	1.05	1.0	0.5	0.9 (lag)
A2	0.9	1.05	0.9(lead)	0.5	0.9 (lag)
A3	0.9	1.05	0.9 (lag)	0.5	0.9 (lag)
B1	0.9	1.05	0.9 (lag)	0.35	0.9 (lag)
B2	0.9	1.05	0.9 (lag)	0.25	0.9 (lag)
B3	0.9	1.05	0.9 (lag)	0.15	0.9 (lag)

Table 4-1 Operating Conditions

4.3 Results

The number of iterations to converge on the unknown parameters for various cases listed in Table 4-1 is shown in Table 4-2.

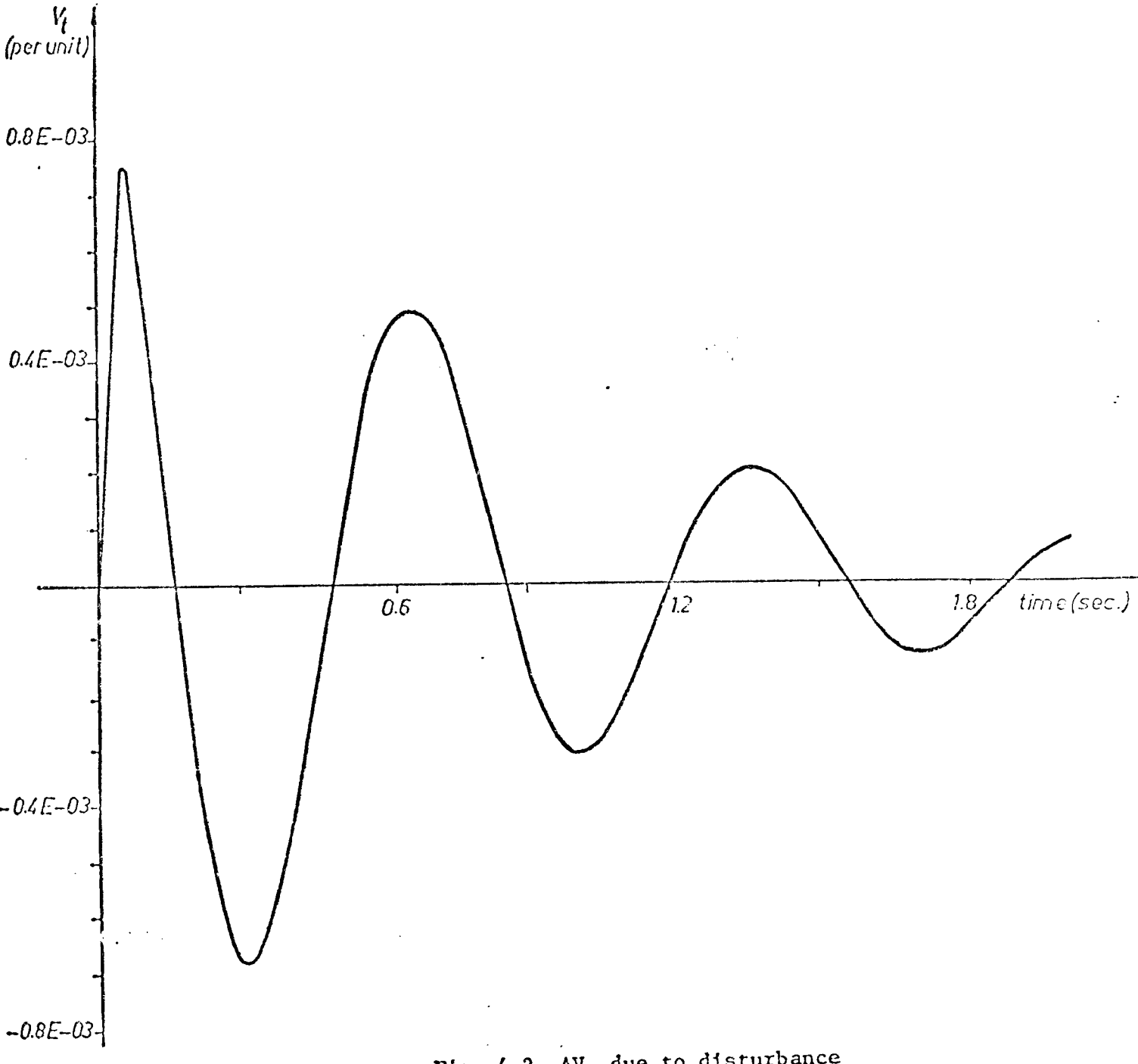

Fig. 4-2 ΔV_t due to disturbance

Initial Guess (Per unit of true value)	A1	A2	A3	B1	B2	B3
3.0	13	10	12	8	7	7
2.0	10	9	6	5	6	6
0.6	17	21	15	18	11	12
* nonuniform	--	--	14	11	7	7

Table 4-2 Number of iterations for various cases.

* Nonuniform guess

$$X_j = 2.0, \quad X'_j = 0.5, \quad M_j = 2.15, \quad D_j = 3.0, \quad T'_j = 0.6$$

Typical results are shown in Fig. 4-3 to 4-14. Regardless of the generator output, local load and initial guess, the estimated unknown system parameters always converge to the same values,

$$X_j = 0.576549$$

$$X'_j = 0.414053$$

$$M_j = 9.26075$$

$$D_j = 25.91$$

$$T'_j = 5.273$$

Details are as follows.

<u>The effect of initial guess</u> For the same operating condition B2, comparison of the figures on pp. 48-51 shows that

(a) Convergence is faster for an overguessing than an underguessing;

(b) None of the uniform and nonuniform guesses takes more than 12 iterations for the estimation to converge.

<u>The effect of local load</u> For various local load, otherwise the same, operating conditions, B3/B2/B1/A3, comparison of the figures on

pp. 52/48/47/43 shows that

(a) Convergence is generally faster with the increase of local load;

(b) None of the cases takes more than 6 iterations for the estimation to converge.

The effect of generator power factor For various generator power factors, otherwise the same, operating conditions, A1/A2/A3/A3', comparison of the figures on pp. 41-44 shows that

(a) Convergency is generally faster for a lagging power factor than a leading power factor;

(b) None of the cases takes more than 12 iterations for the estimation to converge.

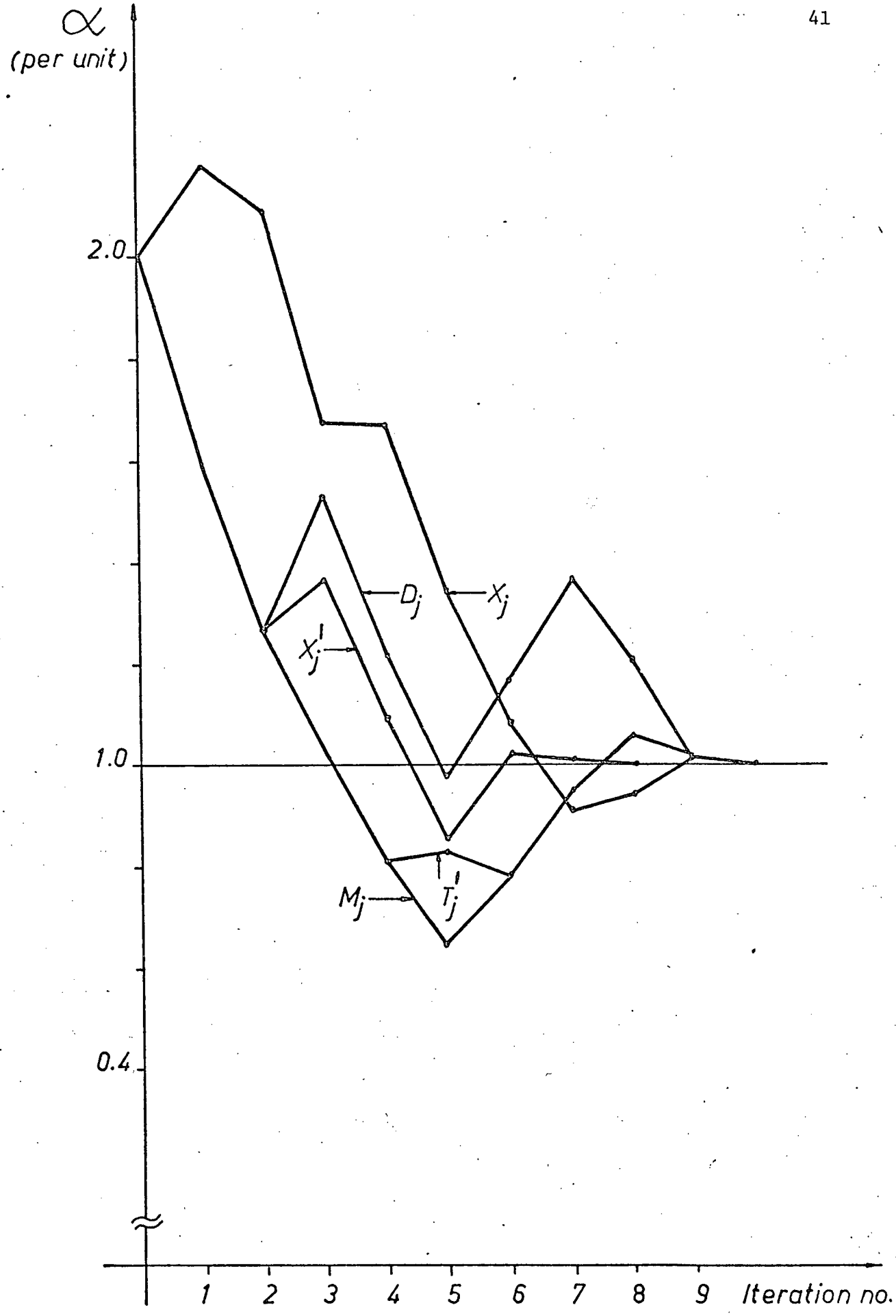

Fig. 4-3 Parameter estimation results for case A1

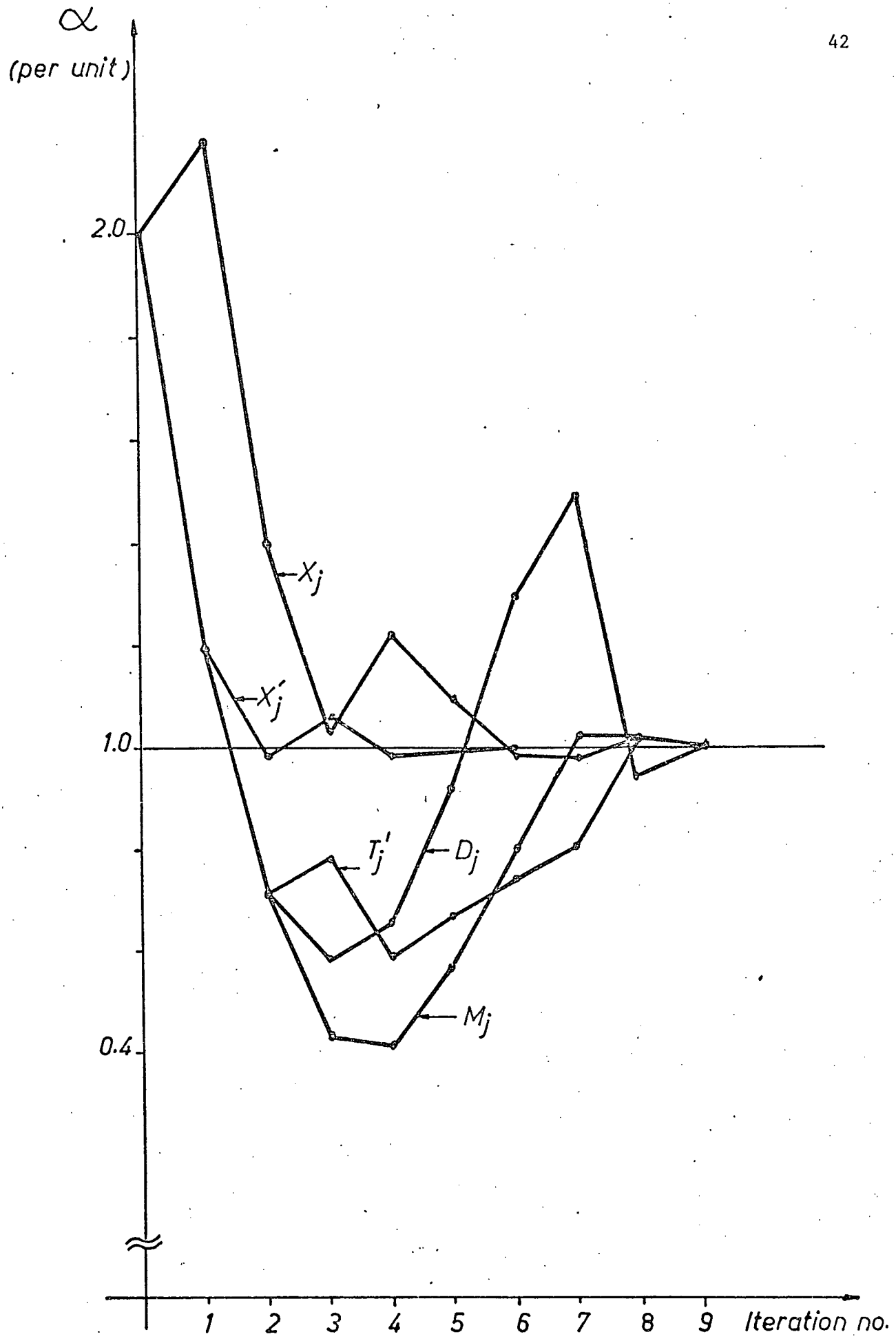

Fig. 4.4. Parameter estimation results for case A2

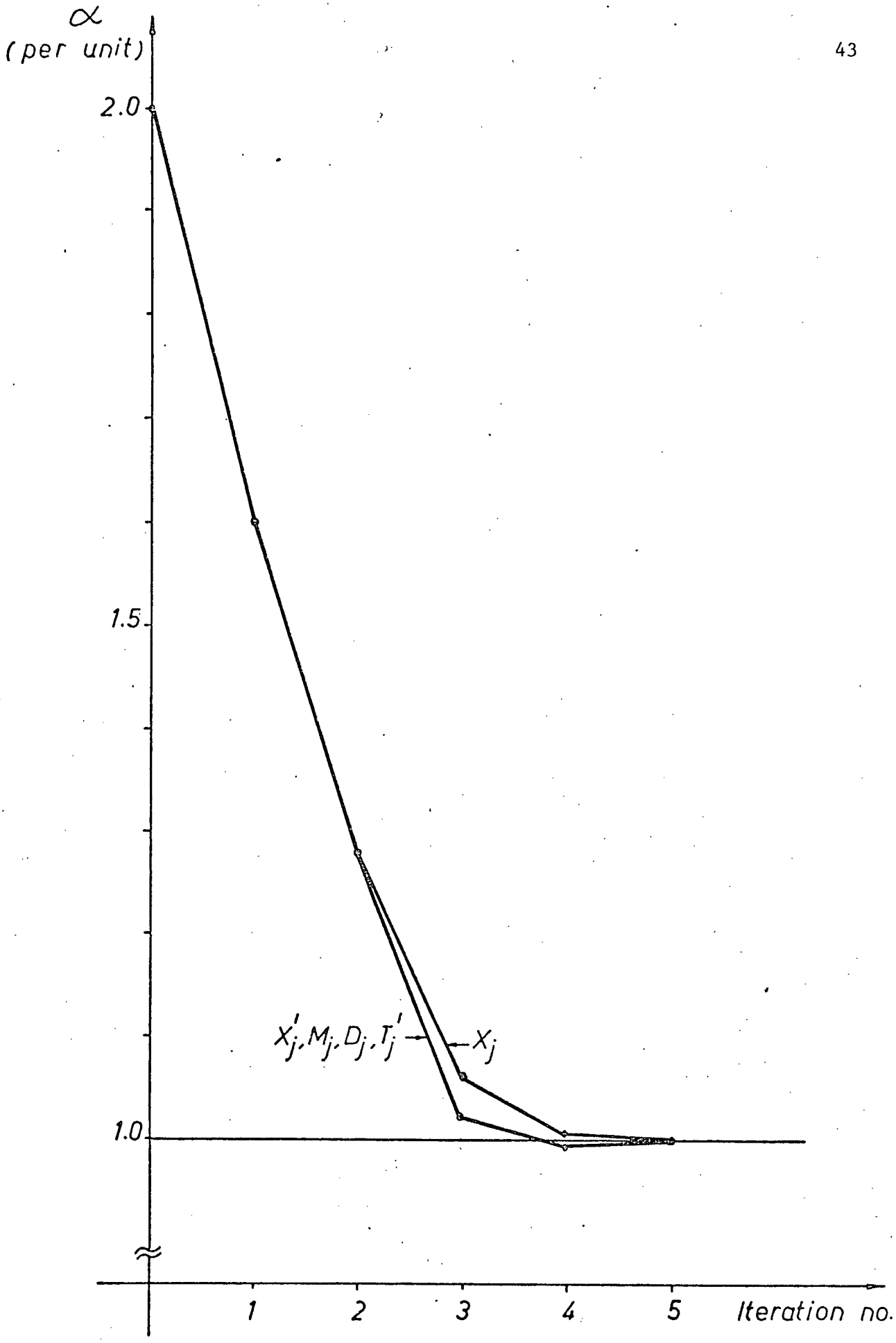

Fig. 4-5 Parameter estimation results for case A3

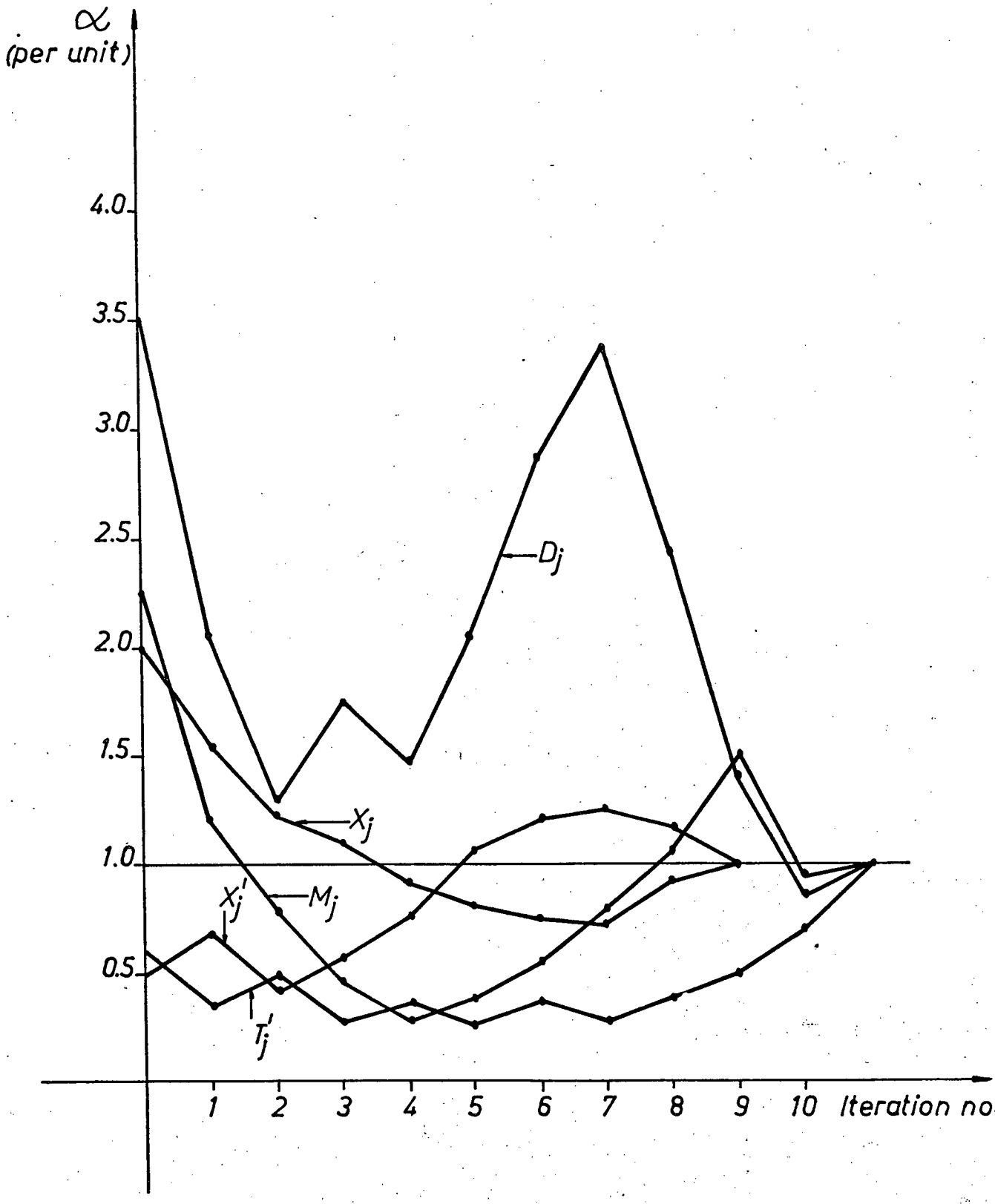

Fig. 4-6 Parameter estimation results for case A3

(non-uniform guess 1)

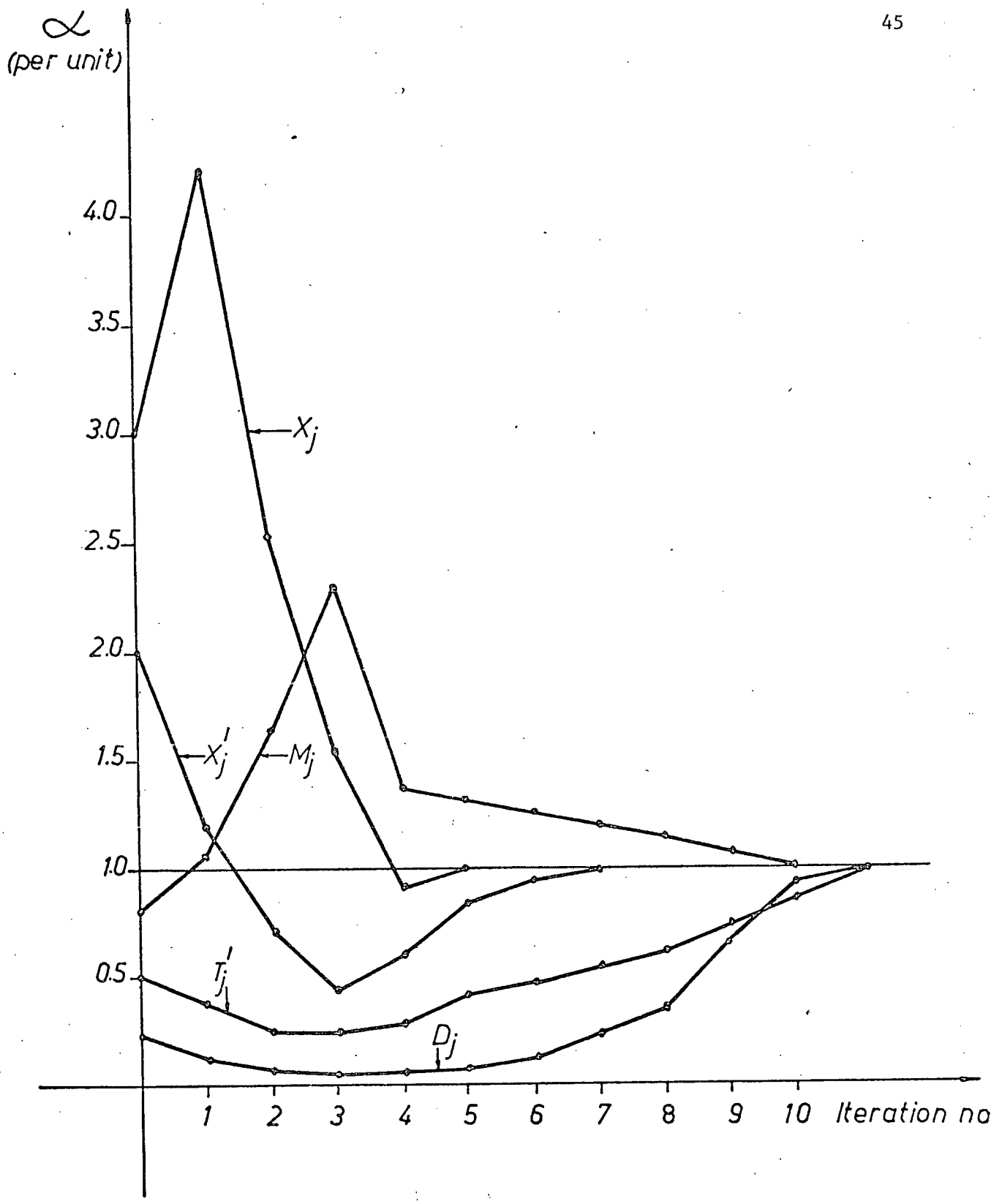

Fig. 4-7 Parameter estimation results for case A3

(non-uniform guess 2)

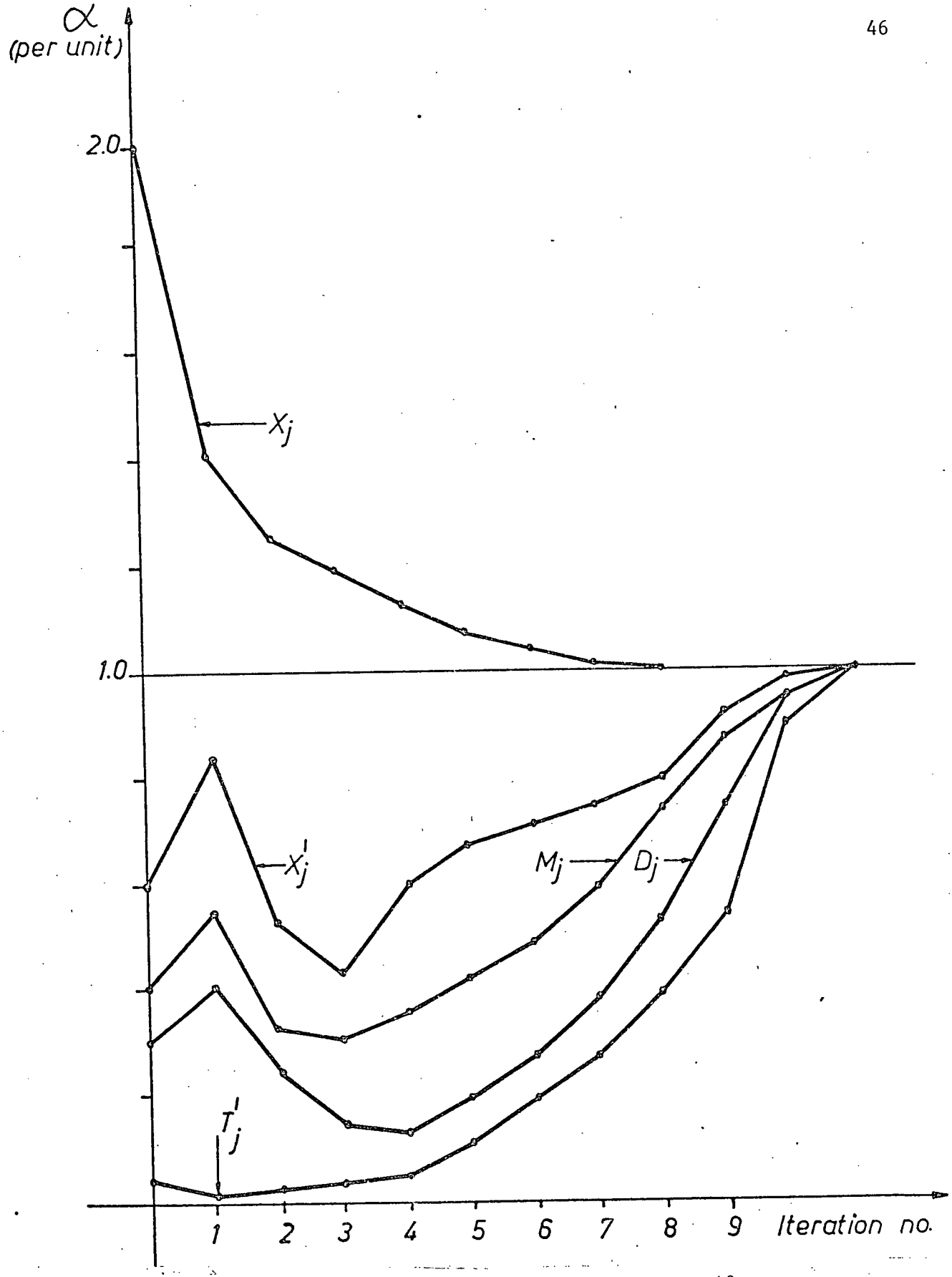

Fig. 4-8 Parameter estimation results for case A3

(non-uniform guess 3)

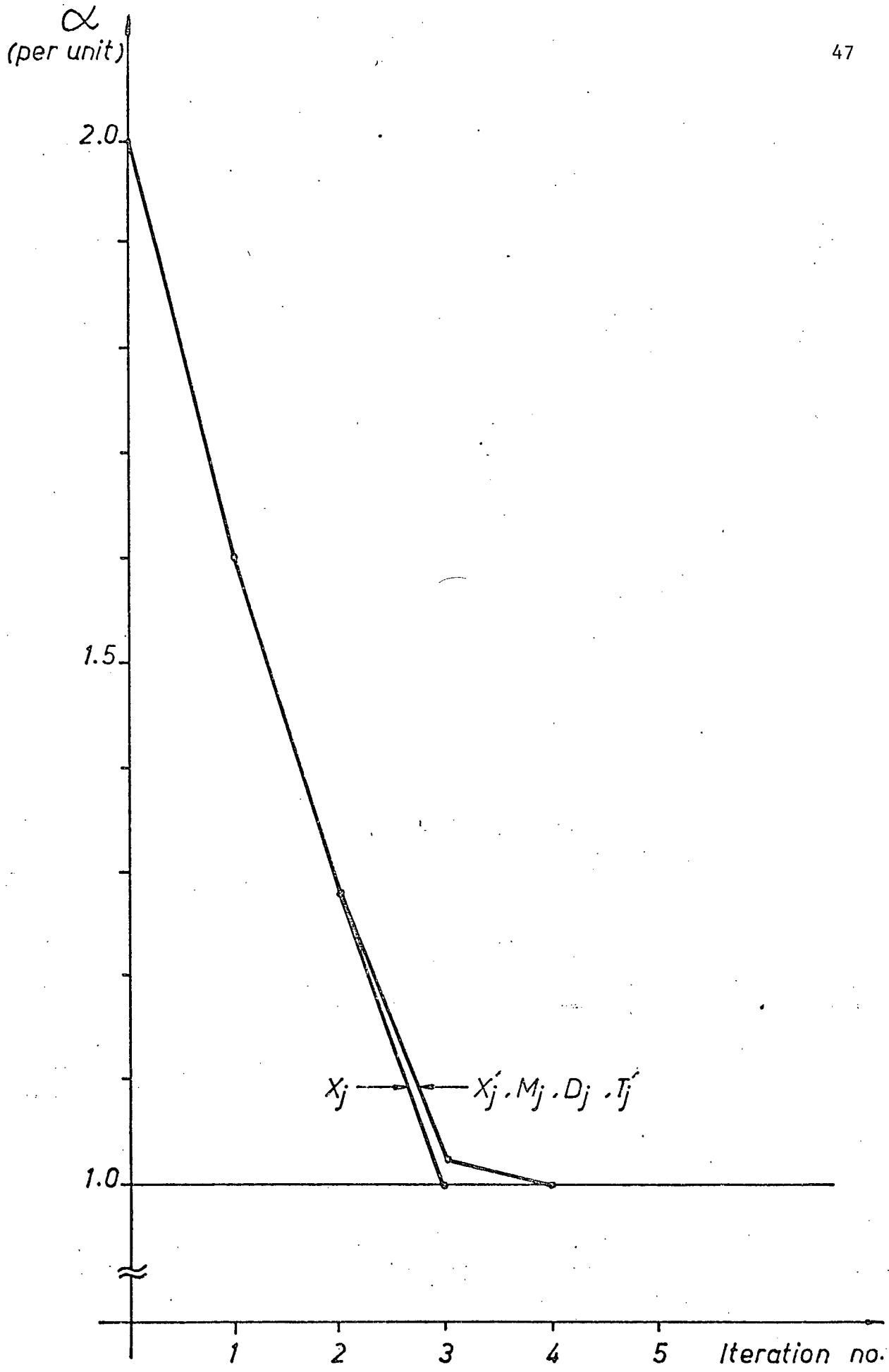

Fig. 4-9 Parameter estimation results for case B1

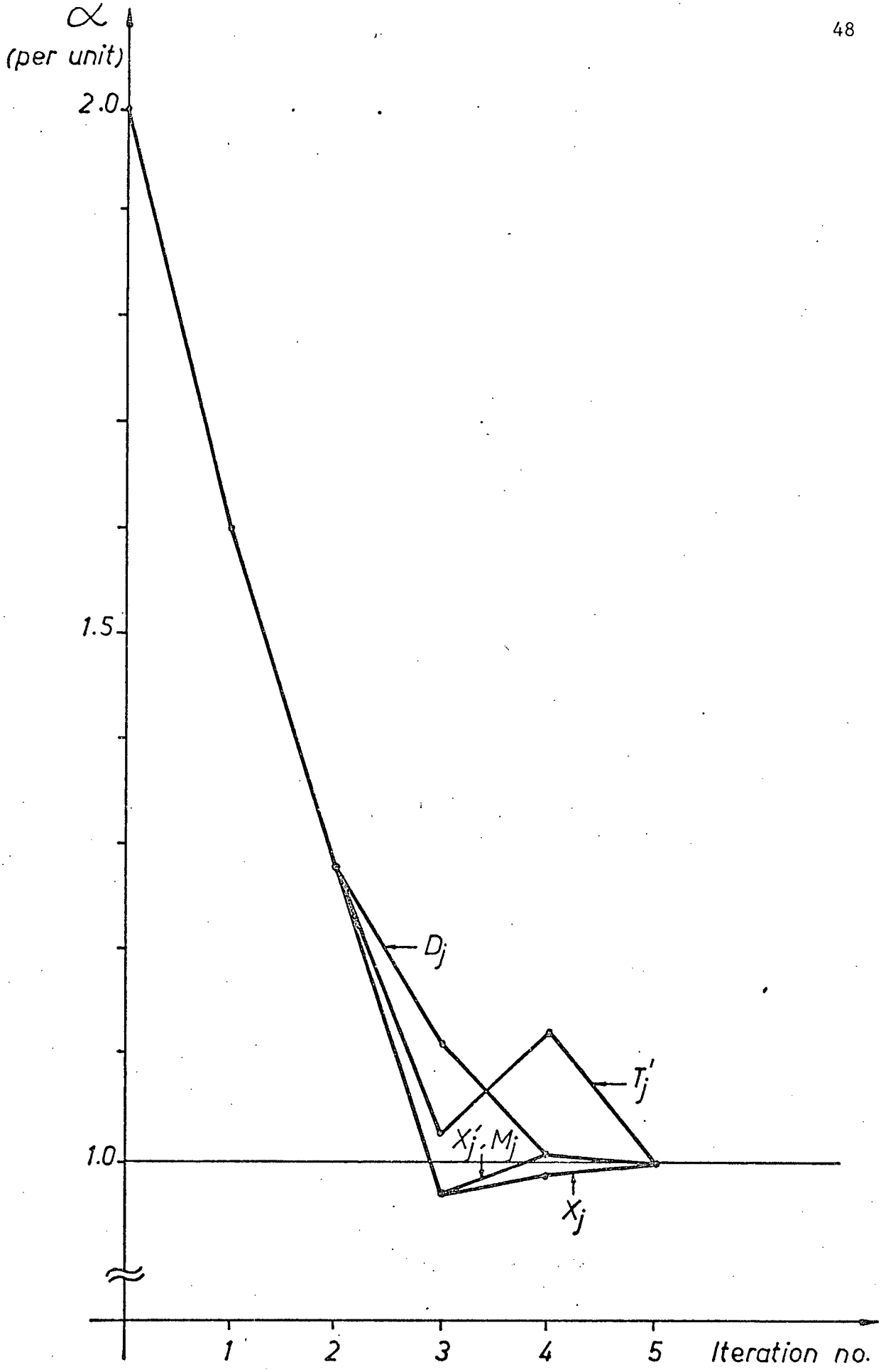

Fig. 4-10 Parameter estimation results for case B2

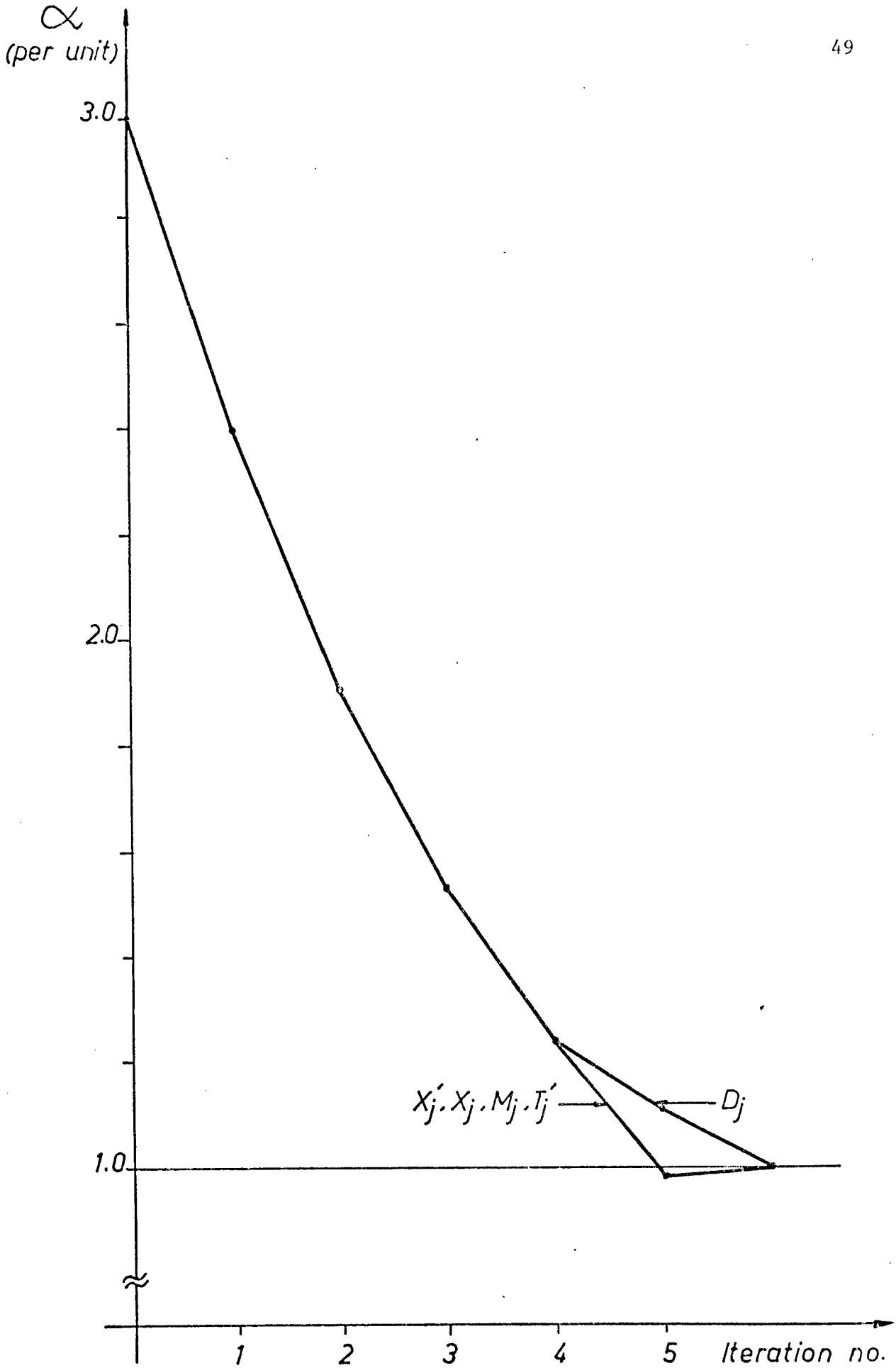

Fig. 4-11 Paramter estimation results for case B2

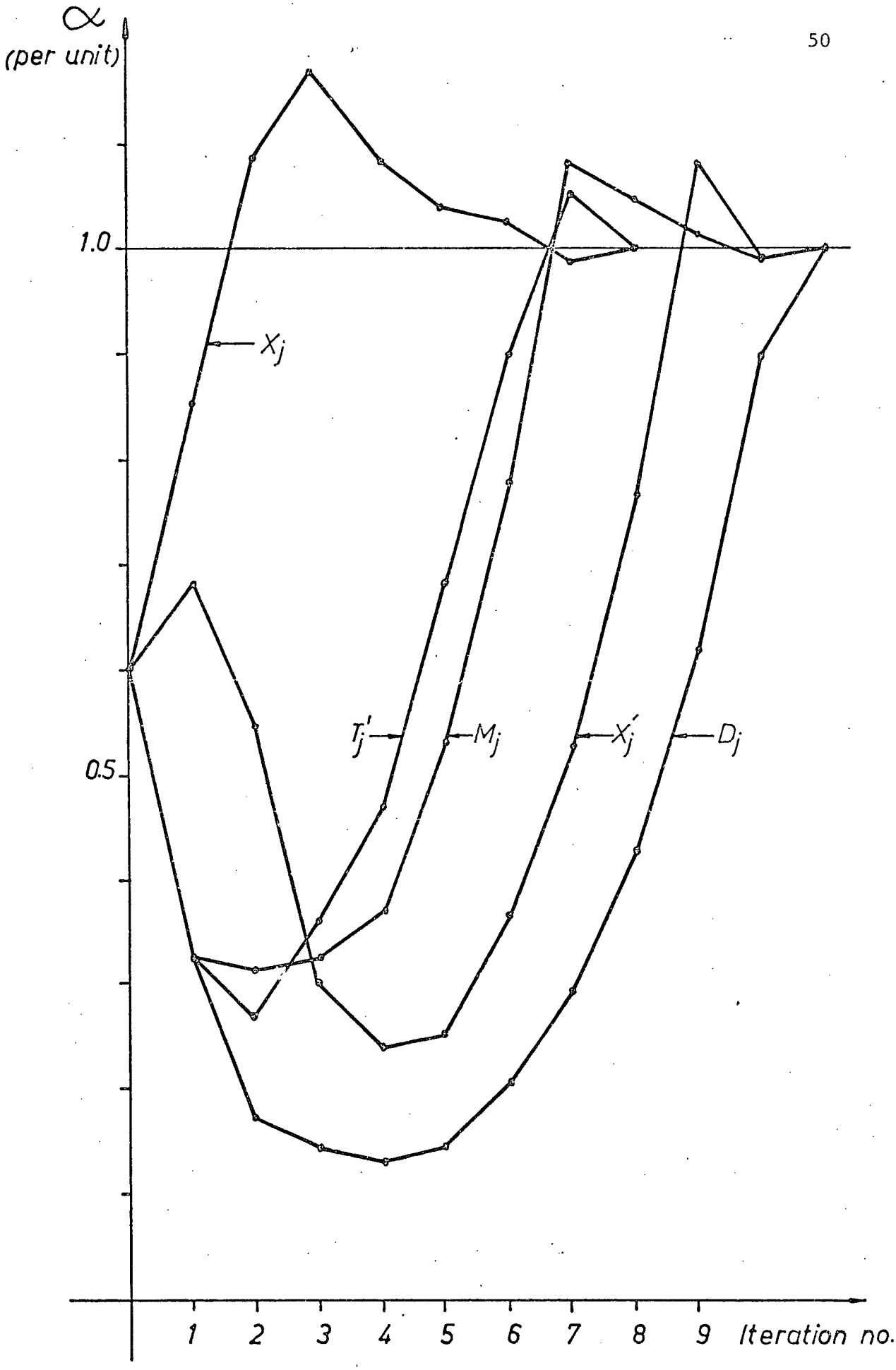

Fig. 4-12 Parameter estimation results for case B2

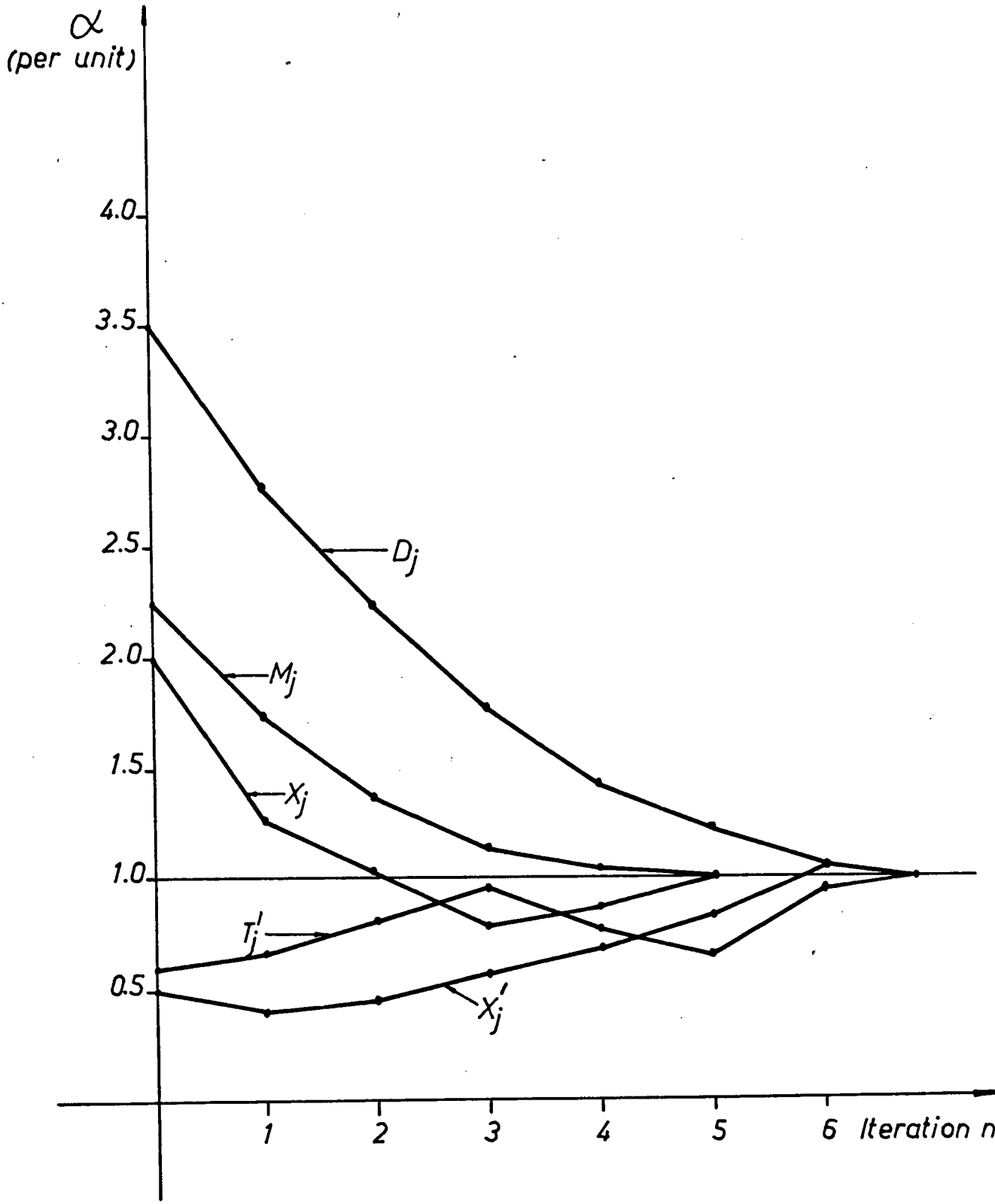

Fig. 4-13 Parameter estimation results for case B2

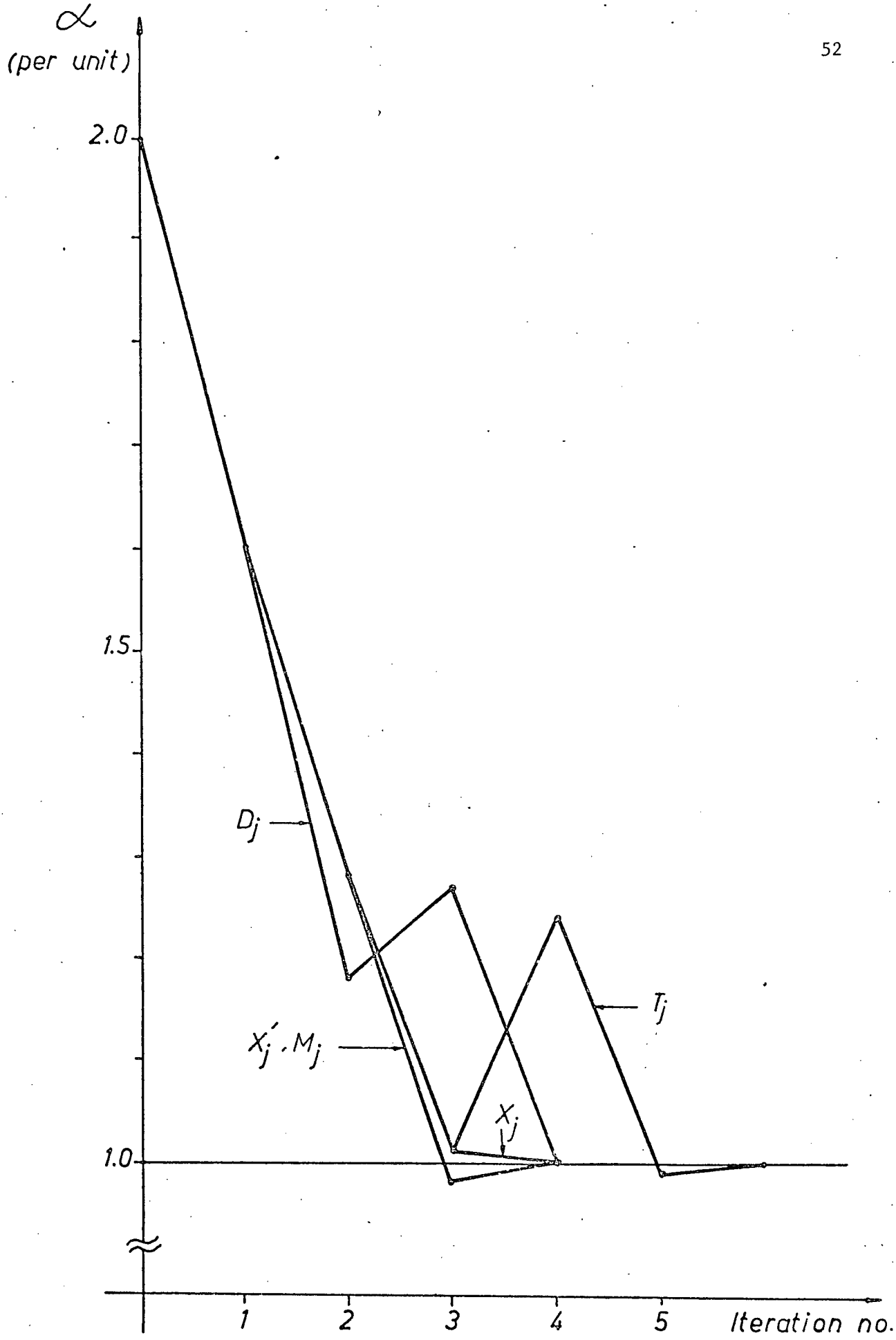

Fig. 4-14 Parameter estimation results for case B3

CHAPTER 5

CONCLUSIONS

An unknown dynamic infinite system model has been developed in Chapter 2 for parameter estimation. The model of the local known system must be adapted accordingly.

The mathematical formulation for the estimation of the unknown system parameters, and the necessary equations have been developed in Chapter 3.

The estimation algorithm, the data used and the results obtained have been presented in Chapter 4.

It is found that

(a) regardless of the generator output, the local load and the initial guesses, all the unknown parameters always converge to the same values;

(b) for the same percentage of guess off the true values, convergence with overguessing is faster than that with underguessing;

(c) a largerlocal load results in faster convergence than a smaller load.

The technique developed is very useful for dynamics studies of large power systems.

REFERENCES

1. P.L. Dandeno, R.L. Hauth and R.P. Schulz, "Effects of Synchronous Machine Modeling in Large Scale System Studies", IEEE Trans. on PAS, Vol. PAS-92, pp. 574-582, Mar/April 1973.

2. G.E. Dawson, "A Dynamic Test Model for Power System Stability and Control Studies", Ph.D. thesis, Dept. of Electrical Engineering, University of British Columbia, December 1969.

3. F.P. deMello and C. Concordia, "Concept of Synchronous Machine Stability as Affected by Excitation Control", IEEE Trans. on PAS, Vol. PAS-88, pp. 316-329, April 1969.

4. M.K. El-Sherbiny and D.M. Mehta, "Dynamic System Stability, Part I. Investigation of the Effect of Different Loading and Excitation Systems", IEEE on PAS, Vol. PAS-92, pp. 1538-1546, Sept/Oct. 1973.

5. Y.N. Yu, K. Vongsuriga and L.N. Wedman, "Application of an Optimal Control Theory to a Power System", IEEE Trans. on PAS, Vol. PAS-89, pp. 55-62, January 1970.

6. Y.N. Yu, and C. Siggers, "Stabilization and Optimal Control Signals for a Power System", IEEE Trans. on PAS, Vol. PAS-90, pp. 1469-1481, July/August 1971.

7. H.A. Moussa and Y.N. Yu, "Optimal Power System Stabilization Through Excitation and/or Governor Control", IEEE Trans. on PAS, Vol. PAS-91, pp. 1166-1174, May/June 1972.

8. B.S. Habibullah, "Dynamic Power System Modelling and Linear Optimal Stabilization Design Using a Canonical Form", Ph.D. thesis, Dept. of Electrical Engineering, University of British Columbia, October 1973.

9. Y.N. Yu, J.H. Sawada and M.D. Wvong, "A Dynamic Power System Model for Teaching and Research", IEEE Trans. on PAS, Vol. PAS-95, pp. 1507-1512, July/August 1976.

10. C.C. Lee and O.T. Tan, "A Weighted-Least-Squares Parameter Estimator for Synchronous Machine", IEEE Trans. on PAS, Vol. PAS-96, pp. 97-101, January/February 1977.

11. A. Sage and J. Melsa, "Estimation Theory with Applications to Communications and Control", McGraw-Hill, New York, 1971.

12. W.L. Miller and J.B. Lewis, "Dynamic State Estimation in Power Systems", IEEE Trans. on AC, Vol. AC-16, pp. 841-846, December 1971.

13. K.Y. Wong and E. Polak, "Identification of Linear Discrete Time Systems Using the Instrumental Variable Method", IEEE Trans. on AC, Vol. AC-12, pp. 707-718, December 1967.

14. K.N. Stanton, "Estimation of Turboalternator Transfer Functions Using Operating Data", IEE Proc. Vol. 112, pp. 1713-1720, September 1965.

15. F.C. Schweppe and J. Wildes, "Power System Static-State Estimation, Part I: Exact Model", IEEE Trans. on PAS, Vol. PAS-89, pp. 120-125, January, 1970.

16. F.C. Schweppe and D.B. Rom, "Power System Static-State Estimation, Part II: Approximate Model", IEEE Trans. on PAS, Vol. PAS-89, pp. 125-130, January, 1970.

17. F.C. Schweppe, "Power System Static-State Estimation, Part III: Implementation", IEEE Trans. on PAS, Vol. PAS-89, pp. 130-135, January 1970.

18. A.S. Debs and R.E. Larson, "A Dynamic Estimator for Tracking the State of a Power System", IEEE Trans. on PAS, Vol. PAS-89, pp. 1670-1678, September/October 1970.

19. A.S. Debs, "Estimation of External Network Equivalents From Internal System Data", IEEE Trans. on PAS, Vol. PAS-94, pp. 273-279, March/April, 1975.

20. E. Handschin, F.C. Schweppe, J. Kohlas and A. Flechter, "Bad Data Analysis for Power System State Estimation", IEEE Trans. on PAS, Vol. PAS-94, pp. 329-337, March/April 1975.

21. R. Ueda, H. Takata, S. Nakagaki and S. Takata, "On the Estimation of Transient State Power System by Descrete Nonlinear Observer", IEEE Trans. on PAS, Vol. PAS-94, pp. 2135-2140, November/December, 1975.

22. H. Takata, R. Ueda, T. Fujita and S. Takata, "An Iterative Sequential Observer for Estimating the Transient States of a Power System", IEEE Trans. on PAS, Vol. PAS-96, pp. 673-680, March/April, 1977.

23. R. Ueda, H. Takata, S. Yoshimura and S. Takata, "Estimation of Transient State of Multi-Machine Power System by Extended Linear Observer" IEEE Trans. on PAS, Vol. PAS-96, pp. 681-687, March/April, 1977.

24. I.M. Canay, "Block Diagrams and Transfer Functions of the Synchronous Machine", IEEE Trans. on PAS, Vol. PAS-85, pp. 952-959, Sept. 1966.

25. O.I. Elgerd, "Electric Energy Systems Theory", McGraw-Hill, New York 1971.

26. Y.N. Yu, "Power System Dynamics" (U.B.C. Lecture notes) 1975 - 1976.

27. R.T. Byerly and E.W. Kimbark (eds.), "Stability of Large Electric Power Systems", IEEE Press, New York, 1974.

28. A.Albert and R.W. Sitter, "A Method for Computing Least Squares Estimators that Keep Up with the Data", J. Siam Series A: Control, Vol. 3, pp. 384-417, 1965.

29. I.L. Kosow, "Electric Machinery and Control", Prentice-Hall, Englewood Cliffs, N.J., 1964.

30. N.N. Hancock, "Matrix Analysis of Electrical Machinery", Pergamon Press, Macmillan, New York, 1964.

31. Kimbark, "Power System Stability", Vol. III, John Wiley, New York, 1948.

32. C. Bird (ed.), "U.B.C. Matrix, A Guide to Solving Matrix Problems", Computing Centre, University of British Columbia, Vancouver, Canada, September 1976.

33. C.M. Lee, "The Solution of Ordinary Differential Equations by a Simple Runge-Kutta Method", Computing Centre, University of British Columbia, Vancouver, Canada, January 1969.

34. A.E. Fitzgerald and C. Kingsley, "Electric Machinery", McGraw-Hill, New York, 1961.