INSTRUMENTATION OF THE SHOTCRETE LINING IN THE CANADIAN NATIONAL RAILWAYS TUNNEL, VANCOUVER, B. C.

by

ROBERT EDWARD MASON
B. A. Sc., University of British Columbia, 1966

A THESIS SUBMITTED IN PARTIAL FULFILMENT OF
THE REQUIREMENTS FOR THE DEGREE OF
MASTER OF APPLIED SCIENCE

in the Department
of
Mineral Engineering

We accept this thesis as conforming to the
required standard

THE UNIVERSITY OF BRITISH COLUMBIA

May 1968

In presenting this thesis in partial fulfilment of the requirements for an advanced degree at the University of British Columbia, I agree that the Library shall make it freely available for reference and Study. I further agree that permission for extensive copying of this thesis for scholarly purposes may be granted by the Head of my Department or by his representatives. It is understood that copying or publication of this thesis for financial gain shall not be allowed without my written permission.

Department of Mineral Engineering
The University of British Columbia
Vancouver 8, Canada

Date July 10/68

ABSTRACT

The Canadian National Railways Tunnel in Vancouver, B.C. is the first tunnel in North America to be driven with a temporary and permanent support system of coarse-aggregate shotcrete in lieu of steel arch sets and formed concrete. In order to determine the function of the shotcrete lining and to aid in the decision to use the lining as a permanent lining, an instrumentation program was undertaken. Surface photoelastic strain gauges and imbedded hydraulic pressure cells were used to determine in situ stresses and strains.

The measurements show that the lining has achieved a relative equilibrium level at three representative measurement points, and that nowhere have the measured stresses and strains been excessive, nor have they even approached allowable design values. The function of the shotcrete lining as a support system has been shown to differ from that attained by steel arch supports.

The use of shotcrete for support of the Canadian National Railways tunnel resulted in considerable economic savings.

ACKNOWLEDGEMENTS

At the University of British Columbia the writer would like to express his appreciation to his supervisor, Dr. C. L. Emery. The author would also like to acknowledge the aid of the Sherrit-Gordon Scholarship from that company.

The author gratefully acknowledges the assistance and advice of Dr. V. Dolmage, E. E. Mason, and J. W. Stewart of Dolmage, Mason and Stewart Ltd., Consulting Engineers for the C. N. R. Tunnel Project. D. R. Stewart and B. E. Hartmann of Terrametrics Inc., were also of great assistance in the selection and installation of the instrumentation.

TABLE OF CONTENTS

LIST OF FIGURES

LIST OF TABLES

TABLE OF APPENDICES

INTRODUCTION

In order to improve railway communications between the north shore of Burrard Inlet, where there are bulk loading and harbour facilities, and the south shore, from where most railway systems converge on the city of Vancouver, the Canadian National Railways is building a tunnel and bridge complex under the city and across the inlet. The total cost of this project is to be $25,000,000. When completed in the fall of 1968 the complex will provide a valuable commercial link to present transportation facilities.

The tunnel route was planned so as to pass through mostly young sedimentary rocks with a minimum of tunneling in soil. The final approved route will be 10,760 feet long, of which 9,340 feet will be driven through rock and only 1,400 feet will be driven through mixed rock-and-soil and soil conditions. The tunnel section is horseshoe-shaped, nineteen feet wide by twenty-eight feet high at the center of the arch.

The decision was made to use coarse-aggregate shotcrete for temporary, and possibly permanent, support of the tunnel in the rock section, in lieu of conventional steel arch sets and lagging,

FIGURE 1 CNR Tunnel

followed by a formed concrete permanent lining. Although this method of rock support has been widely used in Europe over the past decade its use has been neglected in North America until now. Instrumentation of the shotcrete support system was carried out both as a safety feature, and also to aid in the evaluation of the supporting function of the system.

Thesis Statement

This thesis is an analysis of data obtained from the instrumentation program carried out on the shotcrete-lined portion of the Canadian National Railways Burnaby-Vancouver tunnel. The data were obtained from in situ measurements of stresses and strains in the shotcrete lining, using photoelastic strain gauges and hydraulic (system Gloetzl) pressure cells. The analysis was carried out to evaluate the function of the shotcrete lining in supporting the rock loads and to ascertain the need for further lining.

ROCK MECHANICS

The prime function of a tunnel support system is to aid the rock in the redistribution of loads due to excavation, and to maintain an opening of given dimensions in the rock. In order to design a support system, knowledge of the loads to which the support system may be subjected, must be available. At the present time there is a great lack of such knowledge although the measurement of such loads and their effect on a support system have quite recently been undertaken. Qualitatively however these loads on a tunnel lining may be described. The load applied to a given support system may be thought of to depend on the actual rock properties, the properties of the rock mass as a whole and on the function or reaction of the supporting system.

Rock Properties

Rocks in general may be considered to be heterogeneous, inelastic materials, with directional rheological properties.[3] Although some rocks, such as some quartzites, exhibit predominently elastic properties, all granular materials, including rocks, exhibit elastic, plastic, and viscous properties under certain conditions. It is therefore maintained that elastic theory, although useful in soil mechanics analyses (particularly for cohesionless soils) is not fully applicable to rock (or cohesive soils) except in rare cases such

as mentioned above. In fact under most conditions rocks are believed to possess both elastic and flow characteristics. It has been shown that all rocks are inelastic and that they will flow to some extent under load, the magnitude of flow that occurs depending on many factors such as the rock's physical properties, the loading conditions, the loading history and the time duration involved. Rather than acting in an elastic manner such as would be exhibited by the theoretical Hookean model, as represented as a helical spring, rocks may be thought of as acting in a similar manner to another theoretical model, the Kelvin Solid. The stress-strain relationship of such a material is as follows:

$$\sigma = E \cdot \epsilon + \eta \frac{d\epsilon}{dt}$$

where σ = stress,

E = Young's Modulus,

ϵ = strain,

η = coefficient of viscosity

$\frac{d\epsilon}{dt}$ = strain rate

The model consists of a theoretically perfect spring in a parallel connection with a perfectly viscous dashpot, the former component exhibiting elastic properties and the latter exhibiting viscous properties corresponding to the theoretical Hookean and

Newtonian models respectively. (Figure 2. Kelvin Solid)

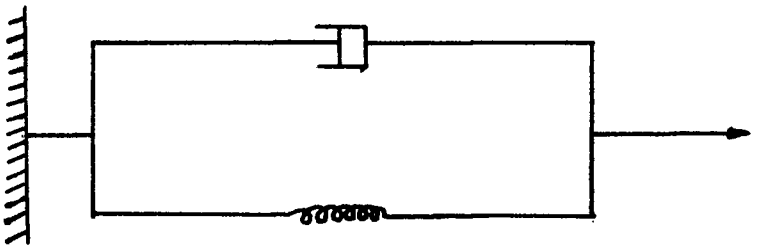

FIGURE 2 Kelvin Solid

Similar models combining elastic and plastic properties have also been suggested, but regardless of whether the flow mechanism is termed plastic or viscous, it is present in rocks to an extent that cannot be ignored from either a scientific or design standpoint. Depending on the properties of the rock, and on the amount of stored strain energy from previous stresses and stress changes, a rock may deform or flow for long periods of time after the in situ stress conditions have been disturbed or relieved. The relaxation of previously highly-stressed rocks has been measured for periods of up to several years. Thus the inherent or "primitive" strain in a rock in situ is a result of its loading history as well as its present loading conditions.

Rock does not have an easily definable strength, but rather it has widely varying strength properties depending on the in situ stress conditions, the size of the sample, the direction of loading, and the rate of loading, as well as many other factors.

The in situ or "primitive" stress conditions that exist in rock or in a rock mass originate from several sources:[3]

1. Stresses due to the weight of superincumbent rocks.
2. Stresses due to the loading history and to the present geological conditions.
3. Stresses due to hydrostatic conditions.
4. Stresses due to man-made disturbances.
5. Stresses due to imposed heat gradients, vibrations, etc.

In fact, none of these sources or components of stress can be calculated satisfactorily in hard rock.

Due to the complexity of these sources it is only remotely likely that all three or even two of the principal stress components are equal. Therefore there is a major principal stress direction and minor stress directions, according to their relative magnitudes. As a result, even in unfractured rock, unsymmetrical loading conditions or directional thrusting must be expected on any supporting structure, as a result of the relief of in situ stresses.

An important rock property from the standpoint of tunnel supporting systems is its reactivity to chemical change and physical deterioration on exposure to air, water or extreme thermal gradients. The presence of swelling clay minerals, such as montmorillonite and illite for example, may cause large dimensional changes in a newly-

exposed rock surface when water is present. The effects of such changes remain one of the greatest problems encountered in tunneling. The deterioration of initially sound rock on exposure to air and water also provides a need for specialized supporting systems or excessively strong conventional systems.

Rock Mass Properties

Often, the strength of a mass of rock is governed by large-scale defects in the rock mass rather than the inter-granular bonding or small-scale defects that govern the strength of small samples. Hence even though the rock itself may be capable of withstanding increased stresses from excavation of a tunnel, the rock mass may not, as it is weakened by fractures, joints, and other defects. A large-scale measurement program followed by a mathematical analysis of the variation of loads with geological factors was carried out at the Straight Creek Tunnel in Colorado. The loads were found to vary with the following factors:[1]

1. the average joint spacing
2. the percentage alteration
3. the mean dip of the joints
4. the thickness of the nearest fault zone

Other, more commonly considered factors such as water conditions, rock type, degrees of faulting and shearing, and the type and strength of supports were also found to contribute. Any

of these factors could be critical depending on specific tunneling conditions. Hence it can be seen that defects in the rock mass had a great influence on supporting loads in this case. Similar but less quantitatively-based conclusions have been drawn from a wide variety of tunneling conditions.

Support Systems

The amount of rock load carried by a support system varies considerably with the function of the support and also with the manner in which the support is actually executed.

For the last thirty years, tunnel support by steel arch sets with wood lagging has been the most commonly used, particularly in the United States. Ideally a system of steel arch sets and wood lagging and blocking would be expected to perform the following function; firstly the rock is allowed to deform a certain amount due only to the ease with which the wood blocking may be crushed, this amount of movement often being sufficient to allow the rock to take up the remaining load; secondly, if the rock is incapable of supporting that load it deforms further, and the steel resists and also deforms, redistributing the rock load to other portions of the rock section, commonly from the arch section to the less highly stressed walls.[11] A considerable amount of deformation is thus allowed and the support system helps to redistribute the rock load more evenly about the rock section. Furthermore the system provides protection

for the workers and a reassuring appearance.

The other approach to rock support is the direct support such as is given by rock bolting and shotcrete systems.[15,17] In this approach, all except the initial deformation (this being a function of the time delay between excavation and supporting) is impeded. Hence the rock is allowed to retain much of its initial structural properties and therefore is able to support the additional loads without suffering excessive deformation and deterioration. Rock bolting has effectively been employed both in Europe and in North America for temporary and permanent support, but the use of shotcrete, which is capable of use in even the worst tunneling conditions has been restricted so far to Europe and South America.

Not only the type of support given, but the quality of workmanship also has a great bearing on the type and extent of rock loads on the support system. For example in the placing of steel sets, the amount and effectiveness of blocking greatly affects the amount of loosening allowed, which in turn determines the support loads. Furthermore the sequence of erection of the sets, the alignment of the sets, and the tunneling rate all have considerable, if undeterminable effects on support system loads.

Rock Movements

The deformation of the rock surrounding an underground opening may be described under two headings, namely short-term and

long-term deformations. The short-term period may be thought of as the period after excavation, until a relative equilibrium condition exists, usually not more than two or three weeks. The term "relative equilibrium" indicates not the complete cessation of movement but rather the very slow rate of subsequent movement such as would result from rock flow.

When a hole such as a tunnel is made in the rock, the rock immediately expands into the opening in release of elastic strain stored in the immediately adjacent rock. The tunnel roof and walls then deform, the roof generally downwards and the walls generally moving outwards, away from each other. This deformation likely occurs as a result of mechanical shifting of individual components of the rock mass as well as volume changes in the rock itself, due to stressing and destressing of surrounding rock. Measurements made both in the United States and in Europe show that during the period between excavation and relative equilibrium, ranging from about eight to thirty days the roof deflects downward and the walls deflect away from the opening.[6,17] These deflections rarely exceed, (and are usually much less than) two inches, and are generally greater in the roof than in the walls. The contractions of the two walls are rarely of the same magnitudes, which indicates the effects of asymmetrical loading. If the rock surface is not immediately sealed and supported the large deformations cause a progressive loosening of the near-surface rock, aided by inherent jointing, bedding or fractures produced by blasting.

Over long periods of time, the flow characteristics of the rock, enable it, and indeed the tunnel itself to be deformed in shape and to experience rotational and translational movement as well. Measurements of such movements have been carried out in the one-kilometer long Wetzawinkel test gallery in Austria by Müller and Pacher over a period of a year.[17] The measurements were taken relative to a fixed position outside of the tunnel, and are shown in Figure 3. Similar, if less severe movements probably occur in most tunnels. Against such long-term movements a massive rigid support system would be unsuitable and uneconomical. A more practical support system would be one which had enough strength and continuity of support to impede and arrest rock movement, decreasing or eliminating further loosening, yet was flexible enough to allow long-term yielding without rupturing.

Coatings

When tunneling in very poor or cohesionless material where heavy inflows of water aggravate already difficult conditions, it has been common practice to pressurize the tunnel and work under compressed air of up to three atmospheres pressure. That this method aids tunneling by decreasing water flows and helping to stabilize very poor ground is well known. Although air pressure has some disruptive effects on loosening rock by opening fractures, it does have a very real effect on ground support, particularly when using higher

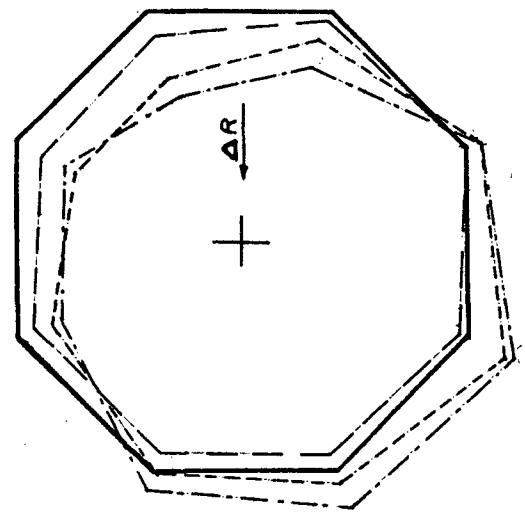

FIGURE 3 Wetzawinkel Test Gallery Measurements

(Exaggerated Scale)

Deformation of Radii with Time in Gallery

——————— 0 Measure (original section)
— — — — — After 4 Days
---------- After 20 Days
—·—·—·— After 360 Days

pressures. If the ground, immediately on excavation, were covered with a thin continuous coating this would enable the air pressure to support a continuous membrane rather than a surface as discontinuous as the bare rock surface. The continuous support which air pressure supplies to a membrane is termed the Caisson Effect. This effect is readily seen in the standard compression test of a cohesionless soil, where air pressure exerted on a thin rubber membrane enables the soil to retain rigidity throughout the duration of the test. Another function of a thin continuous coating on the rock surface would be to prevent the rock from being drained of its inherent water. The presence of this water in the rock pores lends a degree of rigidity to the rock structure due to the water's incompressibility. This effect is known as the Reynolds Effect.

It has been found that gross dimensional changes in some rocks are caused by a change in moisture content, particularly in shales and siltstones.[10] Although these rocks contain chlorites and micas there is no evidence of montmorillonite or illite, which commonly cause swelling of rocks when wetted. In many cases these changes are accompanied by shear failures and disintegration of these rocks. Although the effects of moisture changes on all rocks has not been adequately investigated, it is suspected that many rock failures that have been attributed to other causes, could in fact have been caused by dimensional changes due to the wetting or drying of the rock. To prevent wetting of the newly exposed rock surface a

waterproofing compound may be applied to that surface, that would completely seal off the surface.

Although the extent of stabilization that a suitable sealant-coating would have on a freshly-broken rock surface cannot be measured satisfactorily, in many cases it is likely to be considerable.

SHOTCRETE

Shotcrete (Spritzbeton) was developed in Europe as a means to preserve the initial rock soundness, thus eliminating the need for such massive supports as were previously used. As a result, shotcrete has been widely used in Europe, South America and Japan for both temporary and permanent support. The thin, (from four to eight inches) rapid-hardening coating acts as a rigid yet yielding, continuous structural support, and also as a continuous protective membrane. When properly used with rock bolts or light reinforcing steel this system is capable of controlling and stabilizing virtually all conditions encountered in rock tunneling. Although capable of stabilizing even the more difficult ground conditions, shotcrete should not be used in ground where systematic rockbolting would suffice as a support, as it is an expensive construction material. Rather, as the ground conditions deteriorate the effectiveness and economy of shotcrete support improve.

Coarse-aggregate shotcrete differs from the similarly mixed and applied gunite in that the former is a true concrete containing up to 1 1/4" stone in its aggregate, while the latter is commonly a cement-sand mix. In application and function shotcrete

differs from gunite in the following ways:

1. The shotcrete-rock bond is much stronger than any gunite-rock bond as gunite tends to form more of a cover than an inherent part of the rock. This strong shotcrete-rock bond is believed to be due to the action of the specially developed accelerating admixtures which do not allow the concrete to slough away from the rock surface, to the peening effect of the large aggregate particles on the finer particles, and on the design of the delivery machines.

2. Because of its use of larger-sized aggregate and the aforementioned admixtures, shotcrete may be applied in thicknesses of up to six inches at one pass, whereas gunite is necessarily restricted to thicknesses of not over one inch. This allows the shotcrete system to achieve a supporting as well as a stabilizing function.

3. The accelerating admixtures used in shotcrete allow it to achieve a good shotcrete-rock bond and to achieve high strengths very quickly, even in wet or running water conditions. In fact, shotcrete may be used by itself to seal off substantial water flows. Gunite is unable to perform

under these conditions.

4. Because of the use of larger-sized aggregate, shotcrete may be mixed using sand at its inherent moisture content rather than requiring expensive drying processing to reduce the sand's water content, as is required with gunite.

In the United States the term "shotcrete" has unfortunately been used by the American Concrete Institute as describing all cement-sand-aggregate spray mixes including gunite. In this paper the term "shotcrete" shall be used only in reference to the coarse-aggregate material, with a considerable proportion of at least 3/4" stone present in the aggregate, and containing suitable accelerating admixtures.

History and Development

Gunite has been used underground since 1914 when it was first used at the Brucetown Experimental Mine to smooth, protect, and maintain excavated rock surfaces against deterioration by water and air.[9] Following the Second World War an upsurge in underground work arose in Europe largely in connection with hydroelectric power plants. Existing machines at that time were limited to the use of a maximum particle size of 10 mm., and required processing of aggregates to lower the inherent moisture content.

It was found that aggregate should include a minimum of 15 to 20 mm particle-size material, to build up adequate thicknesses of shotcrete to provide a supporting function in addition to its stabilizing effect. Furthermore, the coarser mix facilitated the use of aggregates at their inherent moisture levels, that is the amount of moisture the sand retains unless dried, and hence did not require particular processing. Machines designed to use 15 to 20 mm stone, combined with specially-designed accelerating admixtures were first utilized as an integral part of the tunneling cycle instead of conventional steel and wood at the Prütz-Imst Tunnel in Austria in 1954-1955. Since then the method has been greatly improved, largely through the development of new machines and better accelerating admixtures. Shotcrete has been used as a temporary and permanent lining for underground excavations in most of Europe, South America, Japan, Hong Kong, and now in Canada. In addition, fine-aggregate spray concrete, without the accelerators or machines used in Europe, has been extensively used in the United States as an economical and versatile general construction material. The spray concrete now used in the U. S. is generally of limited use for underground support.

Constituents and Application of Shotcrete

The regular shotcrete mix used contained 650 lb. Type I Portland Cement, 1520 lb. sand, 850 lb. 1/4" stone and 900 lb. 3/4" stone per cubic yard of shotcrete. In addition approximately 25 lb. of accelerator, either Tricosal T1KA or Sika Sigunit, were added.

There are two methods of mixing coarse-aggregate shotcrete, the wet-mix and the dry-mix process.[9] The wet-mix process involves the mixing of all the concrete constituents with water and pumping the thick mixture through the delivery hose to the nozzle, where additional air is added and the material is sprayed onto the subject surface. The dry-mix process batches all the components dry (except for inherent moisture) and the material is blown through the delivery hose to the nozzle where all the water is added. For underground support the latter method has been most extensively used, as the water-to-cement ratio may be controlled at the nozzle, allowing greater versatility in shotcreting, for example wet and dry patches of rock. Furthermore the dry mix process allows an easier introduction of accelerating admixtures. Finally, the wet-mix machines have not yet been developed to the stage where they can practically handle the larger aggregate, that is greater than 3/4". The wet-mix machines are mainly used in underground stabilization rather than support, and in the construction of swimming pools, roofing, etc.

The quality of shotcrete depends to a considerable extent on the mix proportions, as in conventional concrete. Compared to conventional concrete, shotcrete has a very low water-to-cement ratio, (w/c), ranging from about 0.32 to 0.40. It has been found that 0.35 w/c has been maintained in the field under normal conditions. Fine and coarse aggregates used should conform to A.S.T.M., or similar European standards and should be reasonably dry and clean. The grading of the aggregate should be uniform and particles finer than 1/64 inch should not exceed 2%.

In order to achieve a satisfactory bond and to obtain the very rapid setting required for tunnel support, suitable patented accelerating admixtures have been developed. The accelerators generally are mixtures of water soluble salts which react, chemically altering the dissolution time of silica, alumina, and of the lime in the cement, thus accelerating the hydration process.[13] These accelerators enable the concrete to achieve very high strengths in a matter of hours and in fact, to present a hard surface just minutes after application. Such a concrete or shotcrete is termed "high-early strength concrete" as opposed to normal concrete which does not develop its strength for a period of days. Accelerators have also been developed which do not have any corrosive effect on any imbedded reinforcing steel, even after years of service. Furthermore, these same accelerators have not been found to affect the

final strength of the concrete, as conventional accelerators have. The ability of the accelerator to enable the concrete to seal off significant water flows is also of great importance in tunneling work.

Properties of Shotcrete

Shotcrete has several unique and useful properties as a construction material. The ability of shotcrete to bond strongly to any surface, wet or dry, hard or soft, makes it an ideal protective and supporting member. Since the shotcrete is for all intents an integral part of the rock immediately surrounding an opening, it provides a continuity of support greater than any other support system.

Compared to conventionally poured concrete, shotcrete is strong in compression and unusually so in flexure. A series of fifty samples was taken during a test program carried out on shotcrete taken in situ from the C. N. R. tunnel over a period of several months. These samples were prepared from large slabs of shotcrete cut out of the arch and were tested in compression and in flexure. The compression tests were carried out on three inch cubes and the average strength was 5200 psi for 28-day-old concrete. The flexure tests were carried out on 3" x 3" x 12" beams with center-point loading, and the average modulus of rupture was 1150 psi, also for 28-day-old concrete. The range of compression tests was approximately 4800 - 5400 psi and that of the flexure tests,

900 - 1600 psi. Conventional concrete may be expected to duplicate the compressive stresses, but would likely not exceed 800 psi in the flexure tests. The high strengths of this material are believed to be caused by the very low w/c ratio used and also to the great degree of compaction achieved.

Due to the low w/c ratio, the degree of compaction, and the specially-developed accelerators, shotcrete has very high-early strengths. Although the high-early strengths vary considerably with a number of factors, strengths of up to 650 psi in compression and up to 300 psi in flexure have been found on the C. N. R. tunnel shotcrete at an age of two hours. About 75% of the 28-day strength has been found to be achieved after twenty-four hours. This high-early strength, as well as a certain amount of plasticity, enables the shotcrete to provide an ideal support to the ground movements that occur soon after excavation.

As rock movement often continues for periods of years after excavation, usually due to the creep properties of the rock, a permanent lining must have the capacity to resist this movement without failing. Due to its similar creep properties a thin coat of shotcrete is able to resist this movement without failure. Deformations of up to several inches have been recorded in shotcrete linings over periods of months or years, and examination and testing of the shotcrete revealed that not only were there no

visible cracks in the lining, but also there was no substantial loss of strength."

Supporting Functions of Shotcrete

As a supporting system, shotcrete is believed to have three distinctly different functions. The first of these functions is to act as a sealer to seal off and protect the newly-excavated rock surface from attack and deterioration by air and water. Moreover it provides a continuous flexible membrane, on which the supporting effect of air pressure may act. Secondly, when concentrated on the joints and fracture surfaces or "valleys" with a corresponding decrease of thickness over sound portions or "hills" on the rock surface, the shotcrete acts as a glue or cement which, by its strength and bond prevents or impedes movement along these joints. This function of shotcrete is the one usually considered in Sweden and tunnel linings there are designed correspondingly. Finally, in thicknesses of more than four inches, shotcrete provides a continuous, rigid support not so much as a separate unit, but as an inherent part of the rock surrounding an opening. Only functions such as these would explain the effectiveness of shotcrete linings in conditions of very fractured or swelling rock, and even of cohesionless water-bearing gravels.

FIGURE 4 Difficult tunnelling with shotcrete and steel frames - Monastero Tunnel, Italy

THE CNR BURNABY-VANCOUVER RAILWAY TUNNEL

A temporary lining of shotcrete, supplemented where necessary with rock bolts, is used in the 9340 foot rock section of the tunnel. The 19 foot by 28 foot horseshoe-shaped tunnel is excavated by drilling and blasting the full cross-section in eight to ten foot rounds. Considerable investigation and analysis was undertaken to produce the final tunnel design.

Geology

After considering several alternate routes, the final tunnel route was chosen to run through bedrock for as great a distance as possible, in order to avoid the difficulties and accompanying high costs associated with tunneling in soils. This route allowed 9340 feet of the tunnel to be driven through rock, with an adequate rock cover, and the remaining 1,400 feet to be driven through soils. The thickness of overburden ranged from 30 feet to 180 feet, overlying a thickness of bedrock of up to 130 feet. The overburden consists of glacial deposits of either till deposited by ice, or fluvioglacial deposits such as sands, gravels, silts and clay, deposited by melt water. The tills consist of clay, silt, sand, and gravel, unstratified, unbedded and generally quite soft. Lenses of

coarse gravel and sand, often carrying considerable amounts of water, are interspersed in random but interconnected intervals throughout the tills.

Bedrock consists of a series of sedimentary rocks over 1,500 feet thick, called the Kitsilano formation. These rocks, of late Tertiary age, overlie the Burrard formation of similar, but older and consequently more consolidated rocks. Both formations dip gradually to the south and thus the rocks at the southern end of the tunnel, mostly sandstones and shales, are younger than those at the northern end, mostly conglomerate. There is not noticeable evidence of either faulting or folding.

The conglomerate is made up of well-rounded pebbles up to four inches in size, with occasional larger cobbles, mainly of granitic rocks derived from the Coast Range mountains, with few metamorphosed sediments and volcanic rocks from the same source. The pebbles are cemented with lime and iron oxide, except where they have been deeply weathered. Some areas of the conglomerate were severely weathered prior to glaciation and much of the cement was removed, leaving only stratified gravels. When in this condition the conglomerate disintegrated in minutes, impeding tunneling operations by providing a continuous hail of falling pebbles and fine particles, accompanied by the disruptive dripping of water. The great majority of the conglomerate remains fairly sound, however, until exposed to air

and moisture. There was little tendency for the conglomerate to fracture badly when blasted.

The sandstones range from coarse-grained to fine-grained and are usually fairly soft and water-saturated. The sandstone also broke very cleanly, with little evidence of shattering or interior damage, due to its capacity to absorb shocks from blasting. The permeability of the sandstone, combined with the imperviousness of the accompanying shales, enabled water to collect along sandstone contacts, producing a dangerous condition when present in the tunnel arch. Such a condition would occur due to the weakened, well-lubricated condition of the contact zone.

There were at least two kinds of shale present, a massive fine-grained shale and a coarser-grained, bedded shale, both commonly interspersed with coally streaks and seams. The former broke in a very jagged or conchoidal manner, with fractures propagating to some depth, whereas the latter broke more or less to bedding planes or steep-angle joints. The greater degree of jointing in the shales, their brittleness when blasted, and the water flows which came from shale-sandstone contacts all indicated that the shale would provide the greatest load on a shotcrete supporting system.

Design Considerations

The support system of the rock section of the tunnel was designed to perform two separate but interdependent functions; firstly to stabilize the opening, and secondly, to protect the workers. The nature of the final permanent support system was not to be decided until the tunnel was near completion. Two proposals for temporary and permanent lining systems were suggested:

1. A coat of from four to six inches of coarse-aggregate shotcrete, to be reinforced with wire mesh and rockbolts if required, was to be applied immediately after excavation, to be followed (after the completion of the tunnel) by an additional four inches of shotcrete or eight inches of formed concrete, if necessary.

2. Steel arch sets (8WF27) would be installed at a maximum of five foot spacing immediately after excavation, to be followed by sixteen inches of conventional concrete and pressure grouting behind the concrete lining.

The relative costs of these proposals favoured the first alternative, especially if additional sprayed or formed concrete was found to be unnecessary. In addition, the shotcrete application could

be worked into the excavation cycle so as not to hinder it. The installation of steel sets and particularly the pouring of formed concrete would cause considerable delay to the excavation, which would prolong the duration of the project with subsequently higher costs to the owner. In fact, the cost of the second proposal was estimated at $400 per foot of tunnel while the cost of the primary shotcrete lining averaged to $98 per foot of tunnel for the initial twelve-month period. An instrumentation program was subsequently undertaken to determine the adequacy of the shotcrete lining and to determine the necessity for further lining.

INSTRUMENTATION

In order to evaluate the effectiveness of the shotcrete lining and to decide on the need for further lining, an instrumentation program was undertaken. For reasons of economy, the usefulness of photoelastic disk strain gauges was investigated.

Photoelastic Measurements

Photoelastic strain disks have been used for several years in Great Britain and North America for determining the directions of major and minor principal strains, and magnitudes of principal strains and shear strains in rocks.[18] The simplest of these gauges is a circular disk of birefringent plastic glued to the test area. When the test area and therefore the adhered disk is strained, normally incident polarized light is resolved in the polarizing directions coincident with the two principal strain axes in the plane of the disk, and is transmitted only on these planes. Furthermore, the relative retardation of the light, and therefore the colour of reflected light, is related to the magnitude of the difference between the two secondary principal strains by Neuman's Equation:

$$(\epsilon_1 - \epsilon_2) = \frac{\delta n}{2\,tk}$$

ϵ_1, ϵ_2 = principal strains

δn = relative retardation

t = thickness of disk

k = strain sensitivity factor

$(\epsilon_1 - \epsilon_2)$ = shear strain

By observing the disk with a polariscope, a polarizing-analyzing instrument, under normal incident white light, the directions of the principal strains may be found and the shear strains at any point may be calculated. Using an oblique incident polariscope the magnitudes of the major and minor principal stresses may be calculated.

Under certain conditions a biaxial photoelastic gauge may be used.[8] This gauge consists of a disk of birefringent plastic pierced with a center hole and with a non-stick plastic backing that allows the disk to be bonded only at an annular ring on the outside edge of the disk. When the disks are bonded to the test area and are then strained, the strain is transmitted to the central unbonded portion of the disk and concentrates about the central hole. This produces identifiable symmetrical patterns and colours when the gauge is viewed with polarized light. From these patterns the direction of the major and minor principal strains can be ascertained, as can the magnitudes of these strains. The advantage of the latter type of gauge is that the principal strain magnitudes may be read

off without the use of an oblique-incident polariscope, an instrument more suitable to laboratory work than field measurement. A further advantage of the biaxial gauge is that it is an integrating gauge, which gives the resultant strains across the gauge length whereas the ordinary gauge gives the shear strain condition on a point-to-point basis. The biaxial strain gauges used have a sensitivity factor of 440 microinches per inch. Strains less than about 40 microinches per inch could not be accurately detected. The gauges are quite temperature sensitive, and for accurate work the temperature change should not exceed $3^{\circ}F$.

At this point it was decided to exclusively use the biaxial strain gauges for the following reasons:

1. It was felt that the most important quantity required was the maximum strains, and that shear strains could be calculated from the biaxial readings if required.

2. Temperature changes in the tunnel would not be great even over long periods of time.

3. It was felt that the biaxial gauges were easier to read and interpret by the consultant's engineering personnel.

4. The biaxial gauges were more suitable for overcoring techniques.

Overcoring techniques were first used to measure in situ rock stresses by Nils Hast in Sweden.[7] A. Roberts and others in Great Britain, have used the above mentioned biaxial photoelastic gauges for overcoring, and a similar method was used for the shotcrete lining on this project.[8] This technique uses the following procedure:

1. The subject material is drilled to a specified depth and the end of the hole is flattened and smoothed off with a drill bit designed for this purpose.

2. The flattened surface is washed with solvent to remove traces of grease, dust, etc., and to dry the surface, and the biaxial gauge is glued to this surface.

3. After the glue has hardened, the disk is read to check for initial strain, and then overcored with the size of diamond coring bit used for the original hole.

4. The core is then removed intact, and the instantaneous rebound strain is measured from the disk.

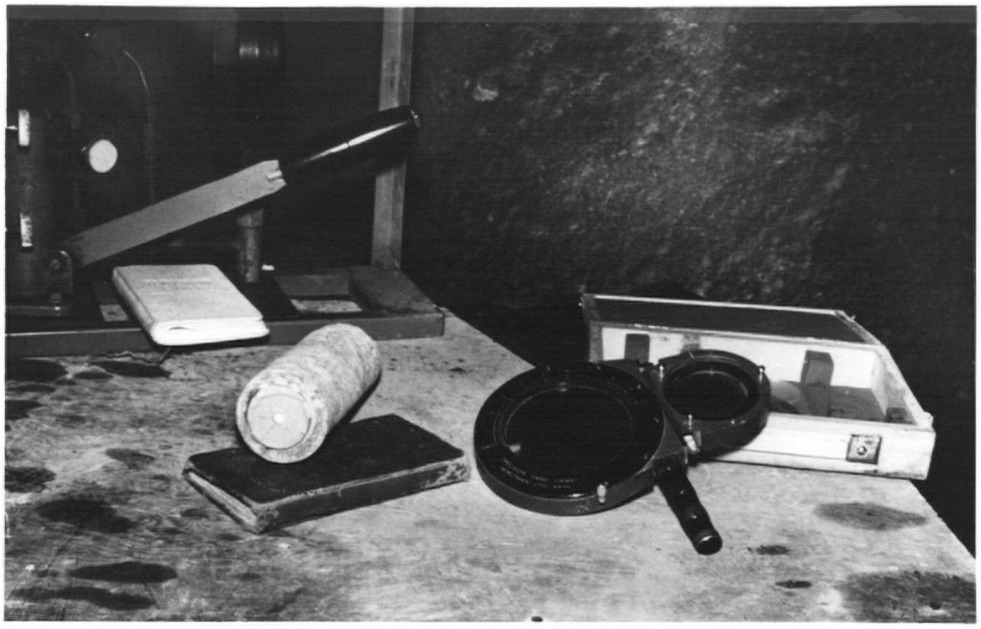

FIGURE 5 Shotcrete core with Biaxial photoelastic gauge attached. Also shown is the compensating hand polariscope

The cores were to be taken at a distance of from one-half inch to one inch from the outer surface of the shotcrete, to ensure that the strains measured would be in the final coat. The overcoring was to be done at three positions at each measurement station, (Figure 6) and these stations were to be located at three hundred foot spacing along the length of the tunnel. The purposes of this work were as follows:

1. to perform spot check tests on strain magnitudes and directions in the outer shotcrete layer,
2. to determine the thickness of the shotcrete lining at each measurement point by coring through the shotcrete to the rock surface,
3. to obtain samples of shotcrete in order to evaluate its physical and structural properties in situ, and

4. to attempt to evaluate the extent and effect of the rock shotcrete bond in different rocks and under different spraying conditions.

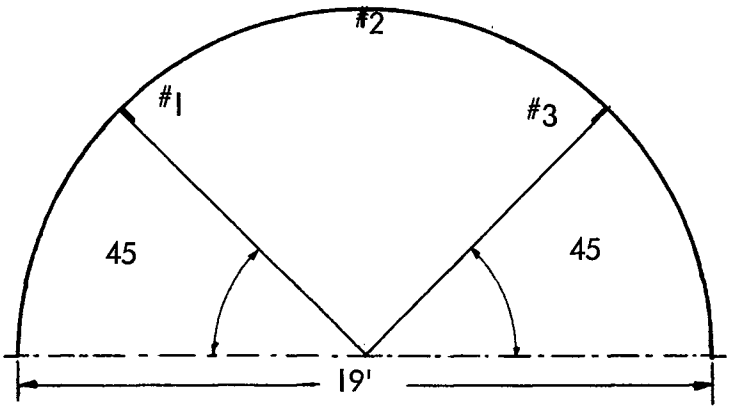

FIGURE 6 Photoelastic strain gauge overcoring station

This overcoring work was carried out on shotcrete that was at least sixty days old and usually much older, so that the lining would have had the opportunity to reach some sort of equilibrium condition.

In order to support the results of the photoelastic strain measurements and to permit continuous monitoring of in situ shotcrete stresses from the time of excavation, a system of hydraulic stress cells, (or more correctly, pressure cells) was introduced. Furthermore, data were required which could be more readily utilized for standard stress calculations of the lining condition.

Hydraulic Cells

The hydraulic pressure cells (System Gloetzl) were expressly developed for the measurement of stresses in concrete tunnel linings or between the lining and the rock or soil.[6] The cells have a thin, strong sensing pad which is embedded within the concrete lining or between the lining and the surrounding ground. The stress or load over the pad area from the surrounding material applies pressure to the pad which in turn is transmitted almost undiminished to the fluid within the pad. The pad has a high ratio of area to thickness so that it approximates an infinitely thin disk, thereby eliminating most of the influence of stress distribution due to differences in modulus of the cell and the rock. A small compensating diaphragm relief valve is connected to the pad by a short length of high-pressure tubing, and the fluid pressure in the pad is transmitted to the pad side of the diaphragm valve. Fluid is delivered to the other side of the valve through high-pressure lines from a hydraulic pressure pump. When the pressure in the lines exceeds the pressure on the other side of the valve, that is the pad side, by 1.5 pounds per square inch the diaphragm valve opens and the fluid is allowed to return to the pump via the return lines. Thus pressure at which the valve opens as read on the pressure gauge at the pump, minus 1.5 pounds per square inch, is approximately equal to the static pressure inside the pad. This approxi-

mation is further improved if the volume rate pumped is very small at the moment of the valves opening. These instruments have found extensive use both by Terrametrics engineers and also by the U. S. Bureau of Reclamation, who support the claims on accuracy and reliability made by Terrametrics.

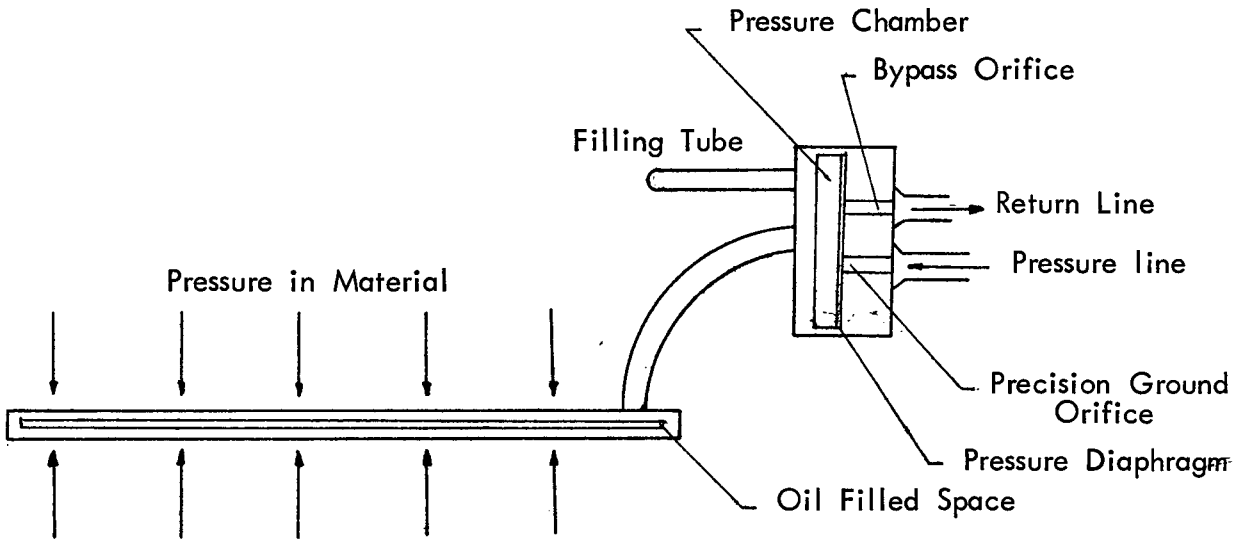

FIGURE 7 System Gloetzl Hydraulic cell

The Gloetzl cells were distributed to make up three measurement stations in three different types of tunneling conditions, which represented the range of geological and hydrological conditions encountered. The cells were arranged as shown in Figure 8. to measure stresses in the concrete section at various points in the arch and to measure pressures exerted by the rock on the shotcrete lining, normal to the lining.

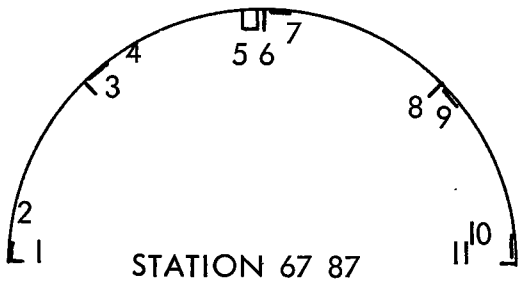

STATION 67 87

CONGLOMERATE

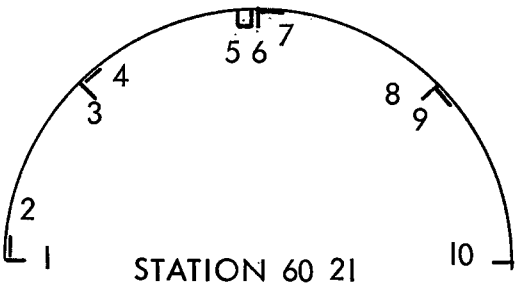

STATION 60 21

SANDSTONE SHALE

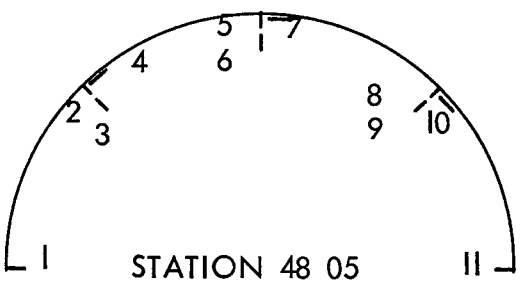

STATION 48 05

SHALE

GLOETZL CELL ORIENTATIONS

FIGURE 8

The first two measurement stations, at 6787 and at 6021 were designed to monitor pressures in the shotcrete and on the rock shotcrete contact at five different positions in the arch. These gauges were aligned so as to measure pressures on a plane perpendicular to the rock surface in the case of the concrete cells and on a plane parallel to, and immediately adjacent to the rock surface in the case of the contact cells. The long axes of these cells were positioned parallel to the tunnel centerline, with the exception of the cells numbered "5", which were aligned perpendicular to this axis. Thus the contact cells measured pressures radial to the opening, and the concrete cells measured tangential pressures, with the exception of cells #5 which measured longitudinal or axial pressures. The contact cells were placed against the rock surface with a thin coat of grout between them to ensure a close bond and a smooth bearing surface. The concrete cells were positioned and held in place with one long edge perpendicular to, and touching the rock surface. The complete installation was then covered with at least eight inches of shotcrete to protect it from blast damage. The entire installation was completed eight hours after the rock surface had been blasted, although only three hours were required for the installation itself. The heading then progressed, the next blast occurring another eight hours after the installation was completed. Readings were taken immediately before and after every blast, that is six times a day, for several days, whereupon the frequency of reading was reduced to

three times a day, once a day, and finally once a week.

The last measurement station, at 4805, was designed to investigate the variation of pressure or stress across the shotcrete section, see Figure 8. This arrangement gave two pressure readings at different depths of the shotcrete on the same plane, and at the same position in the arch. No concrete cell measuring longitudinal pressures was used.

The use of the Gloetzl cells has several disadvantages. Firstly, the cells are unable to measure tensile stresses exceeding the initial pressure to which the cell is subjected. Very small tensile readings of less than about ten pounds per square inch, can be deduced if the cell reads absolute zero, but any greater tensile stresses could not be recorded. Secondly, the cell only records pressures which are normal to the plane of the cell, and thus a rosette-type device would be necessary to determine the complete stress conditions at a given point. Finally, the cell is an integrating device which measures the average pressure over the entire cell surface without indicating the possibly extreme variation of stress over that surface.

Three Gloetzl cell instrumentation stations were planned in the three different rock types, sandstone, shale, and conglomerate. These stations were difficult to locate, as a range from very good to poor rock conditions was desired for comparison purposes, and

installation and practical difficulties compounded the problem of choosing suitable sites. However, a reasonable representation of varying ground conditions was instrumented, as detailed below:

Station 6787: The rock was a well-cemented conglomerate which broke cleanly on blasting, and remained intact for periods of several hours after excavation. No water was encountered and the rock surface remained dry. The support used was six inches of shotcrete on the arch, tapering to four inches on the walls below the tunnel springline. Covering the installation, this thickness may have exceeded eight inches. This section of the tunnel was generally thought of as being the soundest section of the tunnel, and was unusually sound for the conglomerate. There was 280 feet of cover at this point.

Station 6021: Wet, coarse-grained, poorly-cemented sandstone overlies horizontally bedded shales. The contact is 4 feet below the crown of the arch. Continuous trickles of water came from the sandstone and from the fractured contact. The sandstone broke cleanly but the shale became quite shattered, often breaking along steep-angle, widely-spaced joint surfaces. A five-by-five foot spaced pattern of rock bolts gives added security in this section of the tunnel. There was 240 feet of cover at this point.

Station 4805: Hard, fine-grained shale overlies a coarser-grained, mixed shale and sandstone layer four feet below the crown of the arch. The finer shale horizon shattered quite badly on being blasted,

and was cut by widely-spaced high-angle joints. The mixed sandstone-shale broke more cleanly, being softer and less brittle. There was very little water present at this installation. Added security was given by a five-foot by five-foot rock bolt pattern. The height of cover was 140 feet.

Due to the differences in measurement techniques, it would be extremely difficult to correlate data from the overcoring tests and the hydraulic instrumentation. The photoelastic overcoring technique measures the strain over a small gauge diameter of 1 3/4" and measures strain only in the plane of the disk, whereas the hydraulic cells average the pressure over the outside surface of the sensing pad which is 2" wide and 4" long. Moreover, the precise relationship between the strain in the disk and the original in situ strain may be complicated if there is a large strain component in a direction at right angles to the disk surface. The properties measured are different in nature, the disks measuring total deformation, whereas the hydraulic cells measure average pressures.

The uses made of the two measurement techniques also differ considerably, and thus, correlation cannot be expected. The overcoring measurements were made as a series of spot checks throughout the length of the tunnel, whereas the hydraulic measurements provided continuous monitoring of small, selected sections of the tunnel.

RESULTS

Results of Overcoring Photoelastic Gauges

The overcored photoelastic gauges were utilized as spot-check instruments and as such were fairly successful, but efforts to correlate data were confused by the many factors present. For example, the strain varied considerably through the section of the shotcrete so that different readings could be obtained at different depths in the same bore-hole. Moreover, the thickness of the shotcrete varied considerably from point to point. For this reason, only a few general conclusions may be deduced from the photoelastic gauge results, hence these results will be only briefly treated.

The strain readings were generally very low, less than half of them being in excess of seventy-five microstrains (microinches per inch). The maximum strain that was measured was two hundred and seventy microstrains, and only four measurements exceeded one hundred and sixty microstrains. Both tensile and compressive strains were measured.

The strain readings varied considerably from station to station and from point to point in the arch. Generally, however, strain magnitudes tended to be higher in the sides of the arch than in

TABLE 1

BIAXIAL STRAIN GAUGE OVERCORING RESULTS

Maximum Strains, Magnitudes and Directions

Station	Position #1		Position #2		Position #3	
	Magnitude	Direction	Magnitude	Direction	Magnitude	Direction
133	176(T)	85	40	--	92(C)	60
127	40	--	40	--	40	--
124	105(C)	75	162(C)	120	40	--
121	40	--	40	--	40	--
118	40	--	40	--	79(C)	80
115	40	--	40	--	40	--
112	123(C)	110	40	--	123(T)	120
109	40	--	40	--	40	--
106	40	--	40	--	40	--
103	127(C)	65	40	--	40	--
100	40	--	92(C)	165	40	--
97	114(C)	90	88(C)	140	132(C)	75
94	40	--	40	--	40	--
91	40	--	40	--	88(C)	90
88	101(C)	35	123(C)	130	167(C)	35
85	40	--	40	--	141(C)	110
82	40	--	40	--	40	--
79	132(C)	80	40	--	40	--
76	92(T)	125	40	--	40	--
73	40	--	40	--	92(C)	60
70	132(C)	10	92(C)	150	40	--
68	110(C)	60	88(C)	120	40	--
64	101(C)	95	268(C)	70	40	--
54	88(C)	120	88(C)	150	123(C)	40

Magnitudes are microinches per inch, directions are degrees from the horizontal for positions 1 and 3 and degrees azimuth for #2.
Tunnel Azimuth is 145°.

T or C denote tension or compression.

the centre of the arch, although neither side was consistently higher. Higher strain readings also appeared to accompany more complex geological conditions, such as when several different horizons of sediments were exposed in the heading. The directions of principal strain in the horizontally oriented gauges, that is the gauges in the center of the arch, tended to be in the direction of the tunnel axis.

Hydraulic Cell Results

The Gloetzl Pressure cell installations produced a great amount of data which is of a more readily-applicable nature. The cells give data in the form of pressure measurements, which may be considered to be average stress measurements.

A. Rock Contact Pressure Cells - The rock contact pressure cells measure the pressure between the lining and the rock surface, and are hence not necessarily measuring the rock pressures, but also measure the reaction loads that the lining may exert on the rock.

Very high pressures were recorded in several of the contact cells, the highest being 110 psi, or 15,840 psf. This maximum pressure was obtained both at station 4805 and station 6021, whereas the highest pressure recorded at 6787 was 40 psi. Thus although stations 4805 and 6021 had fairly similar pressures, station 6787, where the soundest rock conditions exist, exhibited much lower, but still substantial pressures.

TABLE 2

Maximum Rock Contact Pressures (psi)

Station 6787

#2	#4	#7	#9	#11
10	40	30	10	10

Station 6021

#2	#4	#7	#9
20	110	64	80

Station 4805

#4	#7	#10
105	60	40

TABLE 3

Maximum Lining Pressures (psi)

Station 6787

#1	#3	#6	#8	#10
30	90	170	290	20

Station 6021

#1	#3	#6	#8	#10
30	90	160	380	20

Station 4805

#1	#2	#3	#5	#6	#8	#9	#11
20	305	50	1105	1380	120	990	40

Pressures not only varied from station to station, but also varied extensively from point to point in the arch at each station. (see Figures 9, 10, 11). In all three stations the highest pressures are exhibited by the #4 cell, which is situated on the left or east side of the arch. Another common feature to all stations is the lack of pressure on the springline cells, which could possibly indicate a tensile condition.

All the cells appeared to reach a plateau or relative equilibrium level after a period of several weeks. All the cells in each measurement station reached this equilibrium level at roughly the same time, although this period varied from station to station. (Figures 12, 13, 14) The cells at station 4805 all experienced a break in their pressure-time curves shortly after installation, which was likely the result of a ten-day pause in advancing the heading. The equilibrium level that is reached involves a considerable amount of deviation, and changes in pressure occur even after a six-month period. In particular the cells at station 6021 experienced considerable increases in pressure during the period from 100 to 140 days after installation.

B. Concrete Pressure Cells - The concrete pressure cells measure the pressure in the concrete itself, immediately adjacent to the rock. These pressures were for the main part quite low, although at station 4805 pressures of up to 1320 psi were recorded. The highest pressures

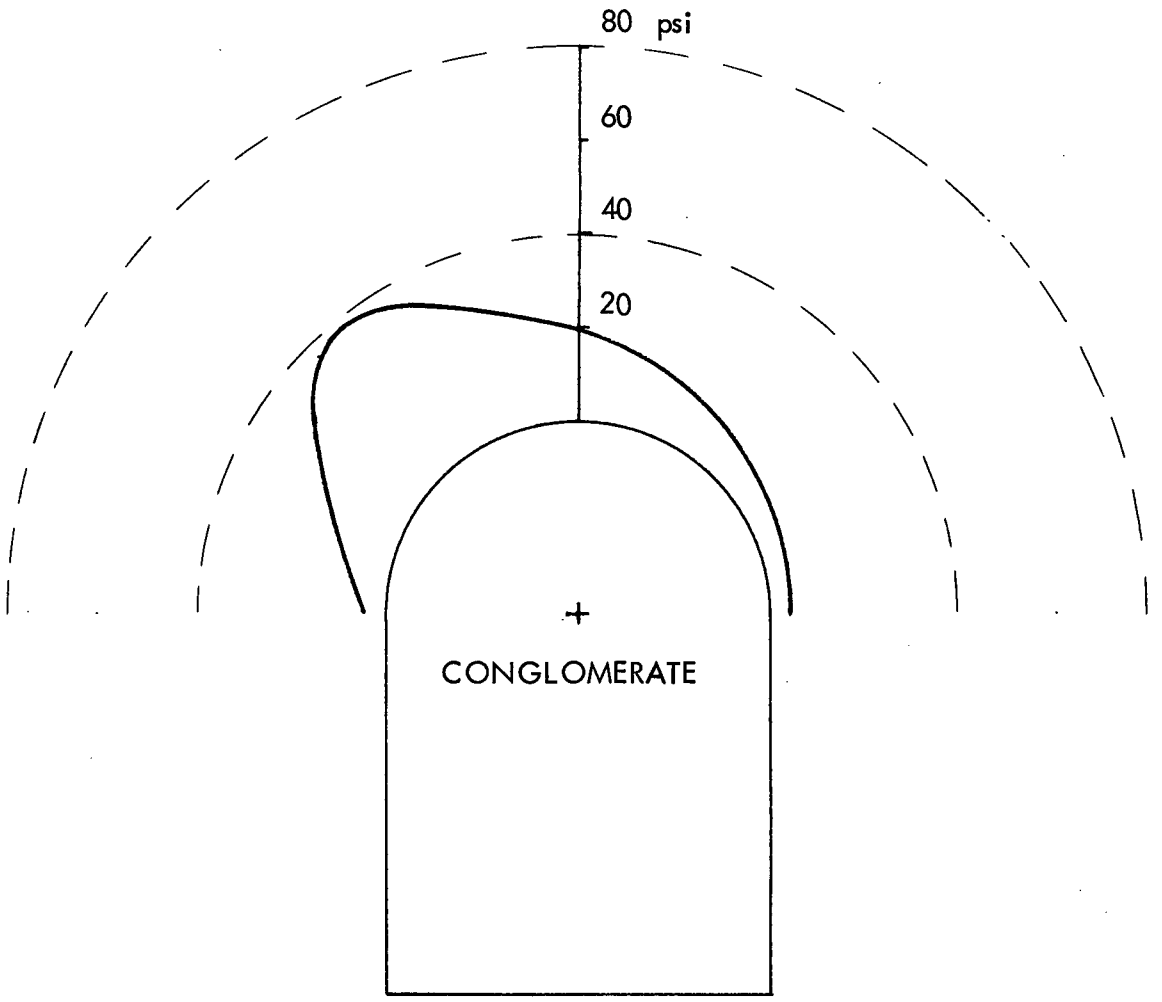

CONTACT PRESSURE DISTRIBUTION

STATION 67+87

FIGURE 9

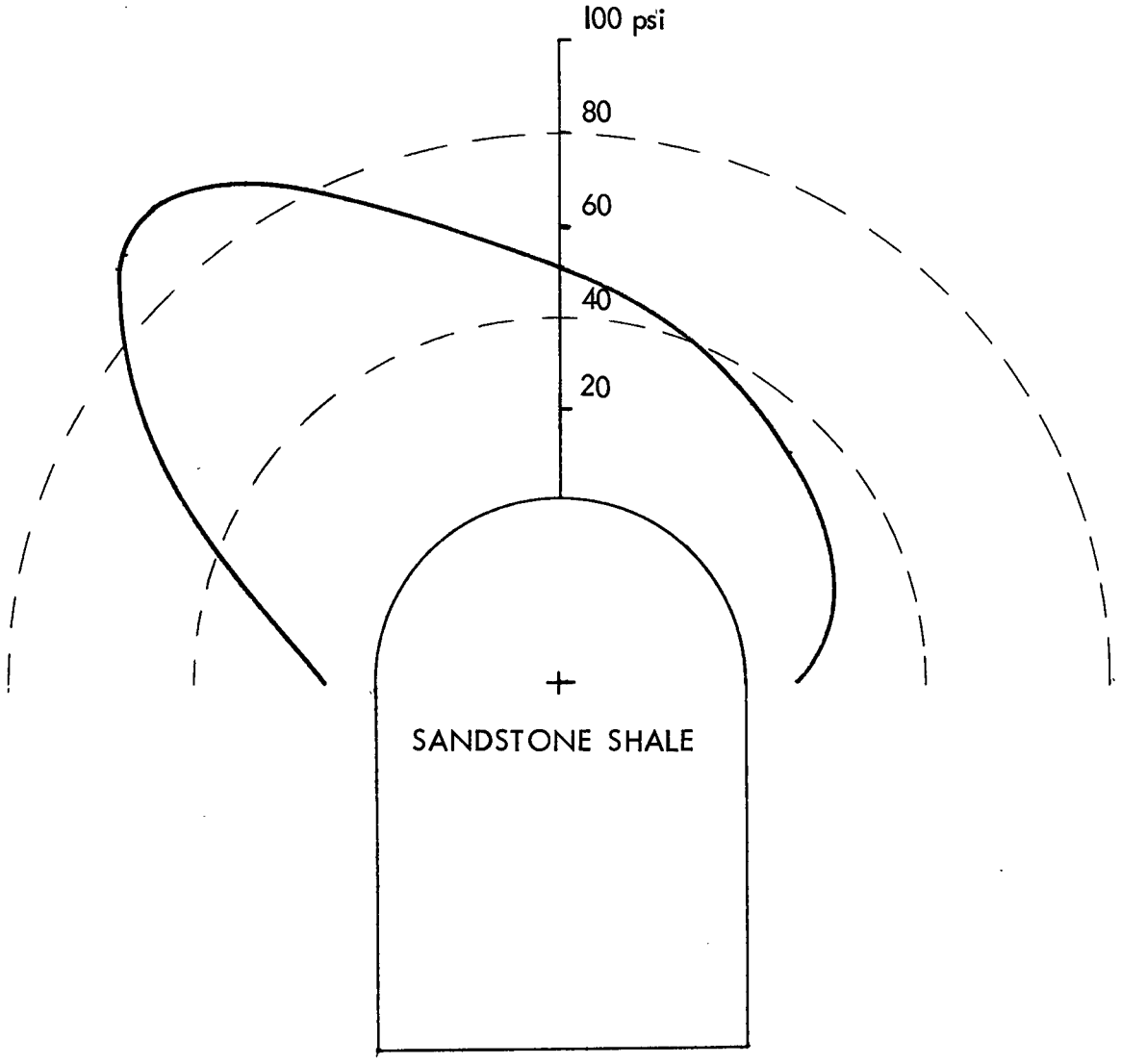

CONTACT PRESSURE DISTRIBUTION

STATION 60+21

FIGURE 10

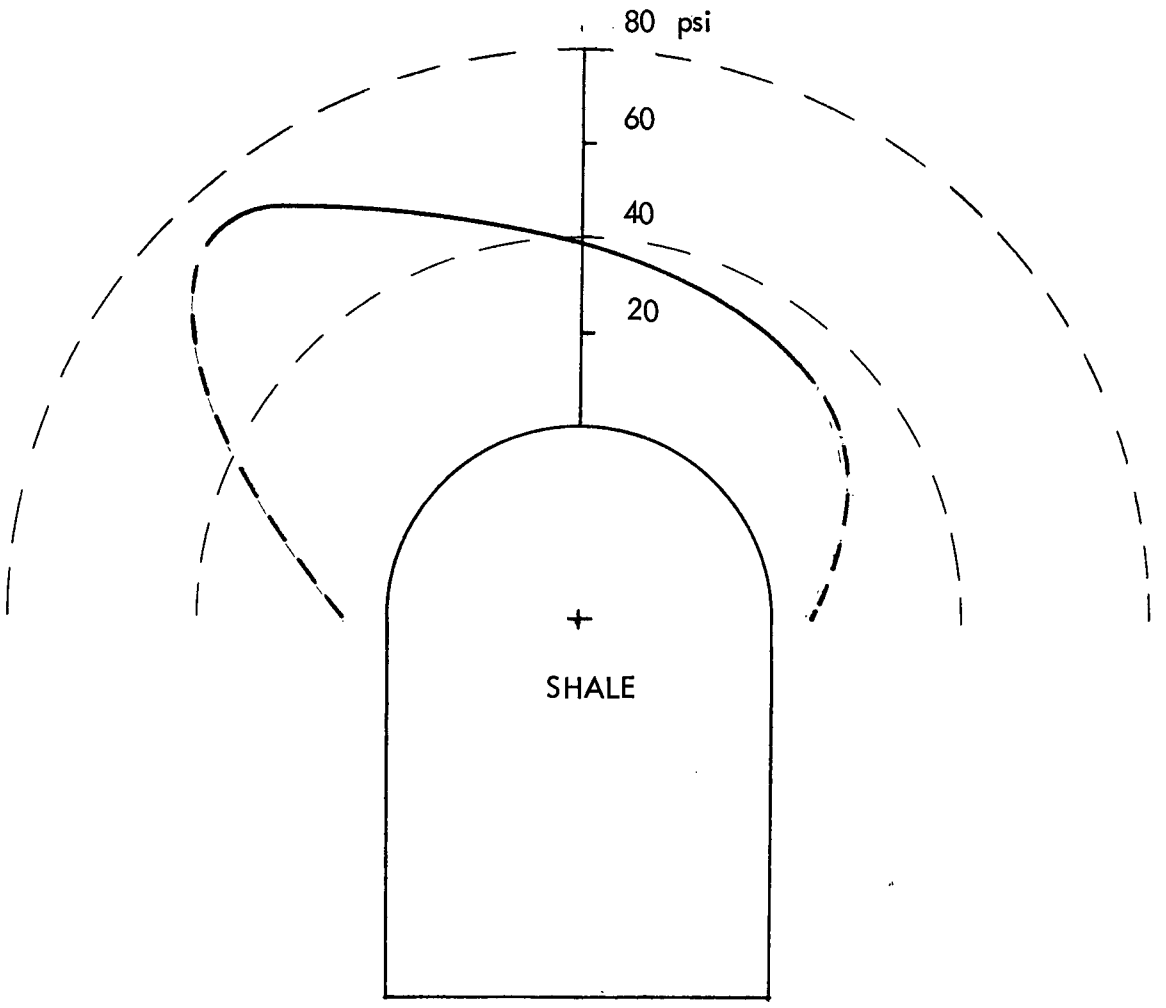

CONTACT PRESSURE DISTRIBUTION

STATION 48+05

FIGURE 11

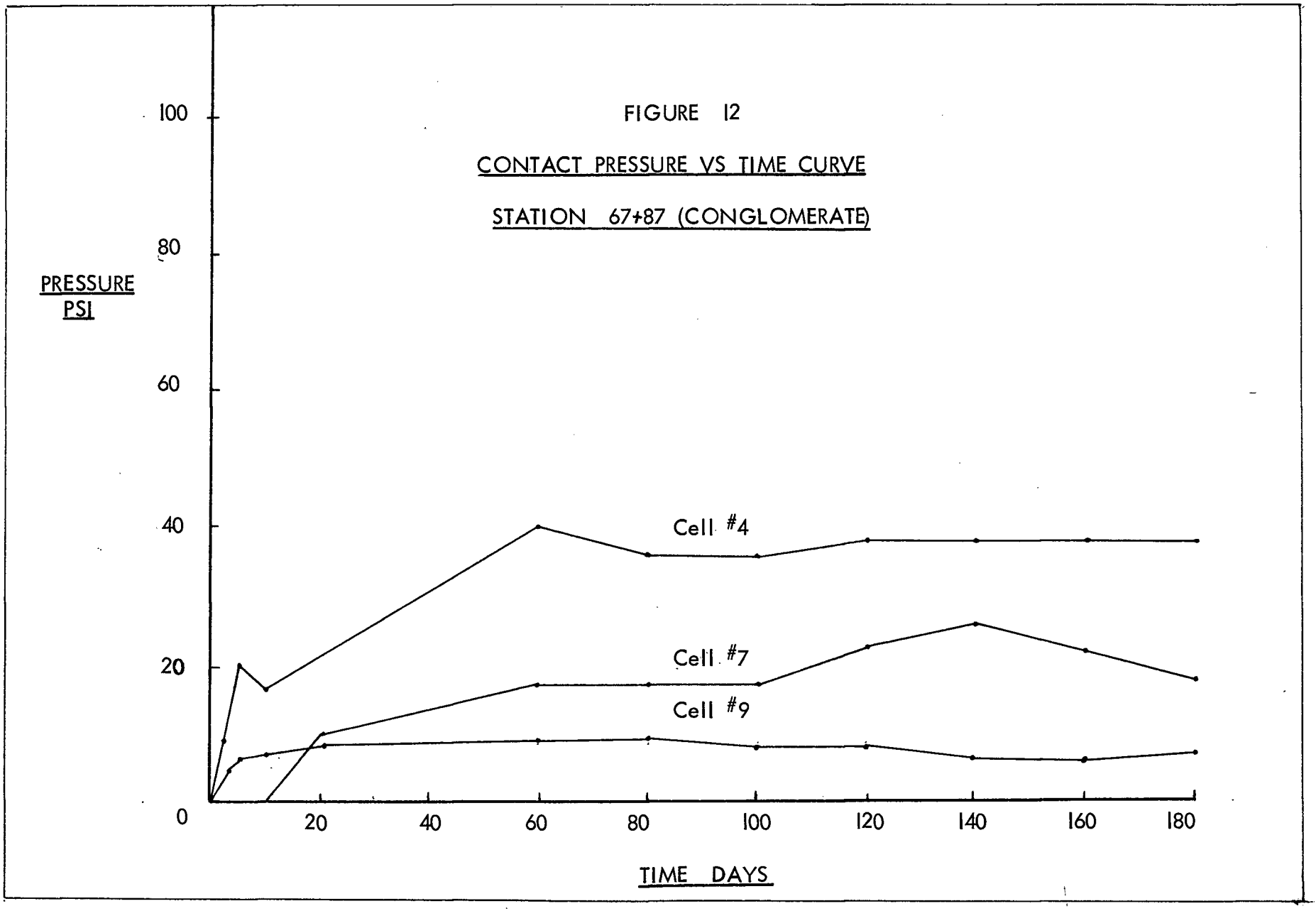

FIGURE 12

CONTACT PRESSURE VS TIME CURVE

STATION 67+87 (CONGLOMERATE)

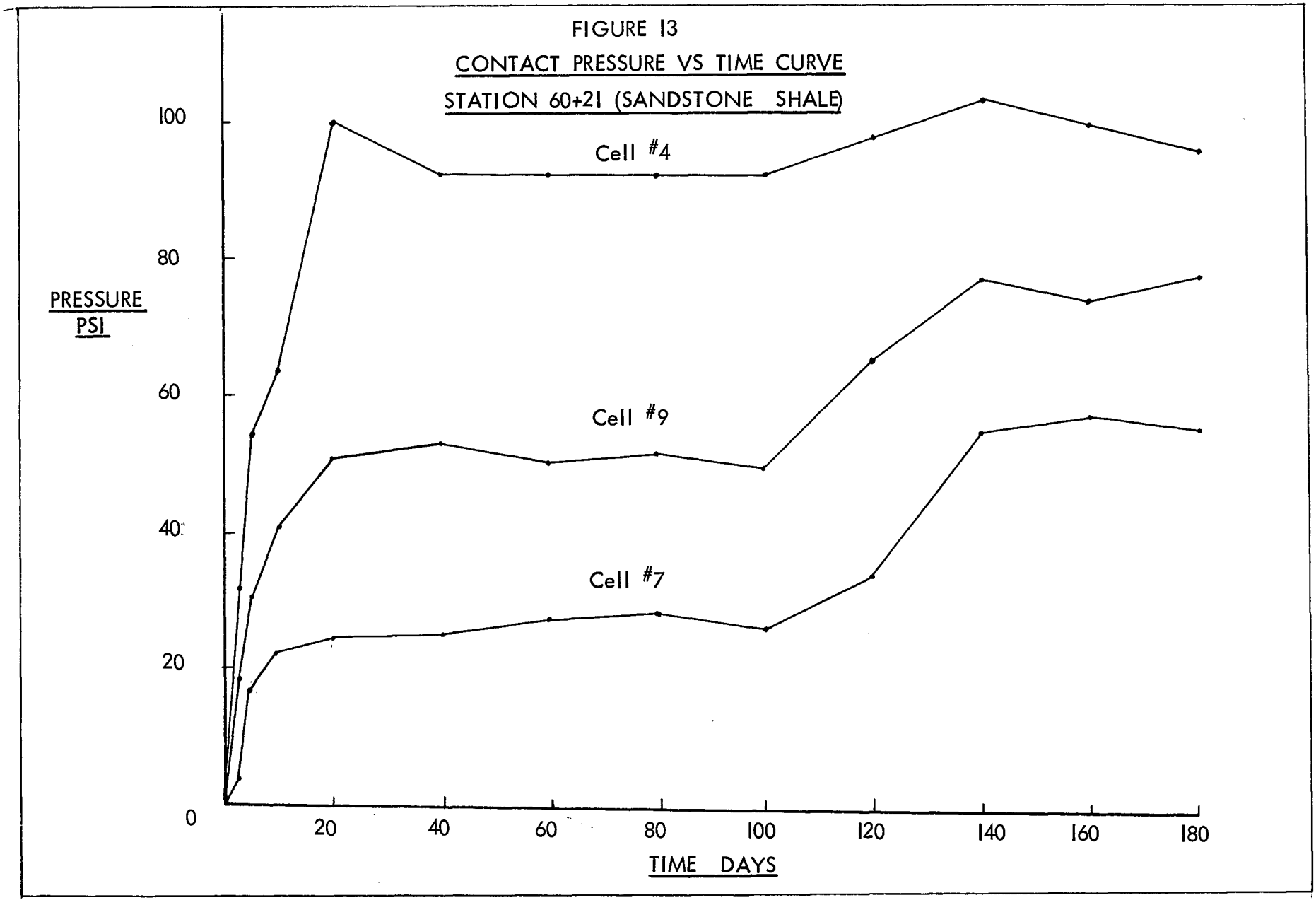
FIGURE 13
CONTACT PRESSURE VS TIME CURVE
STATION 60+21 (SANDSTONE SHALE)
PRESSURE PSI
100
80
60
40
20
0
Cell #4
Cell #9
Cell #7
20
40
60
80
100
120
140
160
180
TIME DAYS

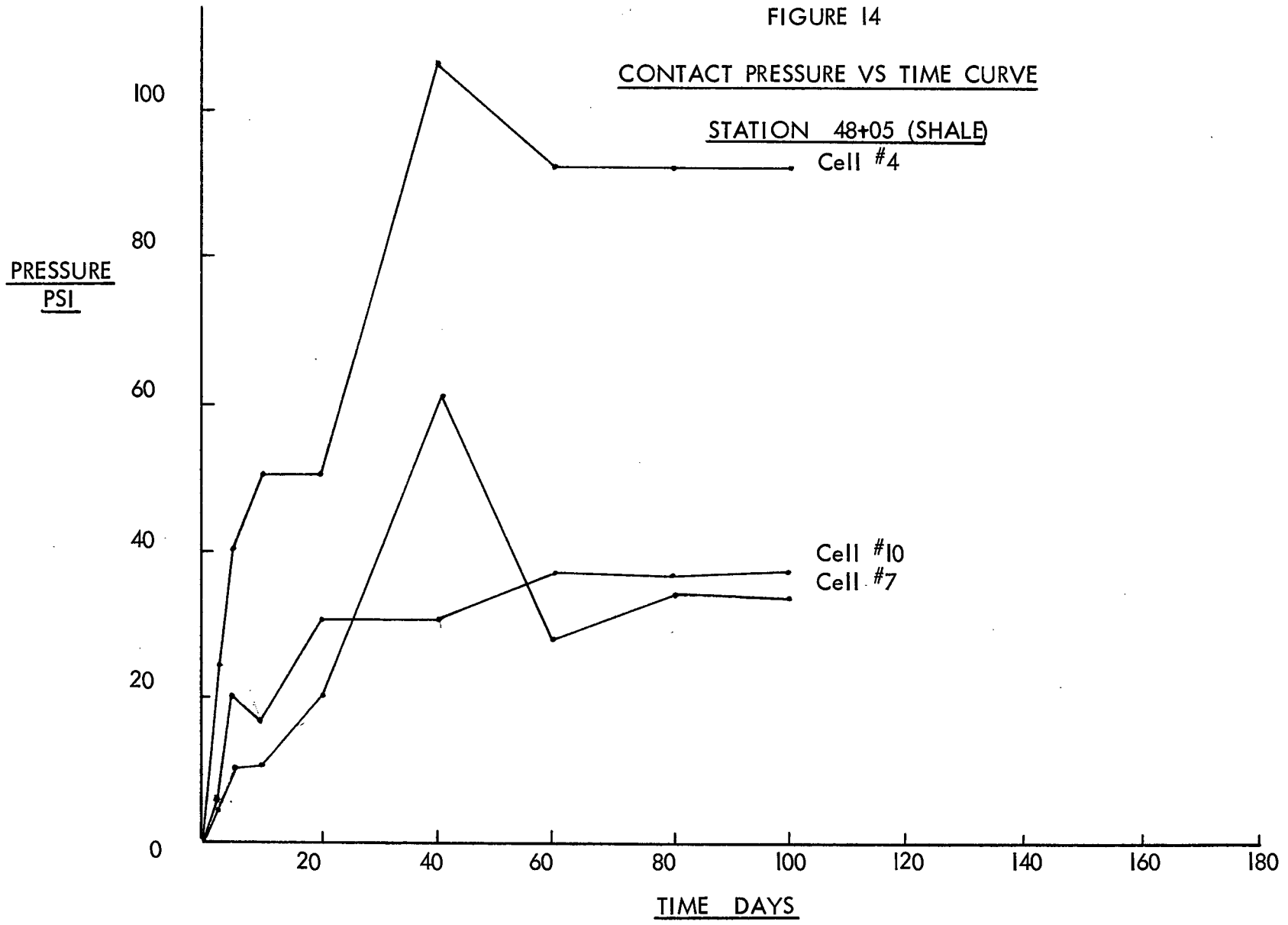
FIGURE 14
CONTACT PRESSURE VS TIME CURVE
STATION 48+05 (SHALE)
Cell #4
Cell #10
Cell #7
PRESSURE
PSI
100
80
60
40
20
0
20
40
60
80
100
120
140
160
180
TIME DAYS

measured at stations 6787 and 6021 were 290 and 380 psi respectively.

A decidedly asymmetric distribution of pressures from point to point in the arch at each station was recorded (Figures 15, 16, 17). The pressures at all three stations appear to be higher on the right or west side of the tunnel, and in fact the pressures at the #8 position are the highest pressures recorded at stations 6787 and 6021. At station 4805 the pressures at the #8 - #9 position were higher than those at the #2 - #3 position and on the other side of the arch, but less than those at the #5 - #6 position in the center of the arch.

The concrete pressure cells reached a level of relative equilibrium after a period of several weeks. The deviation from this equilibrium level varied considerably, station 6787 deviating considerably whereas station 6021 experienced only minor deviations. (Figures 18, 19, 20) Station 4805 appeared to be disturbed by the ten-day period during which the tunnel ceased production, but finally reached a level of equilibrium after eight weeks.

The cells at station 4805 were installed so as to measure the pressure at different depths at the same measurement point. These pressures were quite different, and indicated a condition of complex bending and loadings in the shotcrete lining. At position #2 - #4, the pressure next to the rock was much higher than at a point farther away from it, indicating that in the plane of the measurements the lining

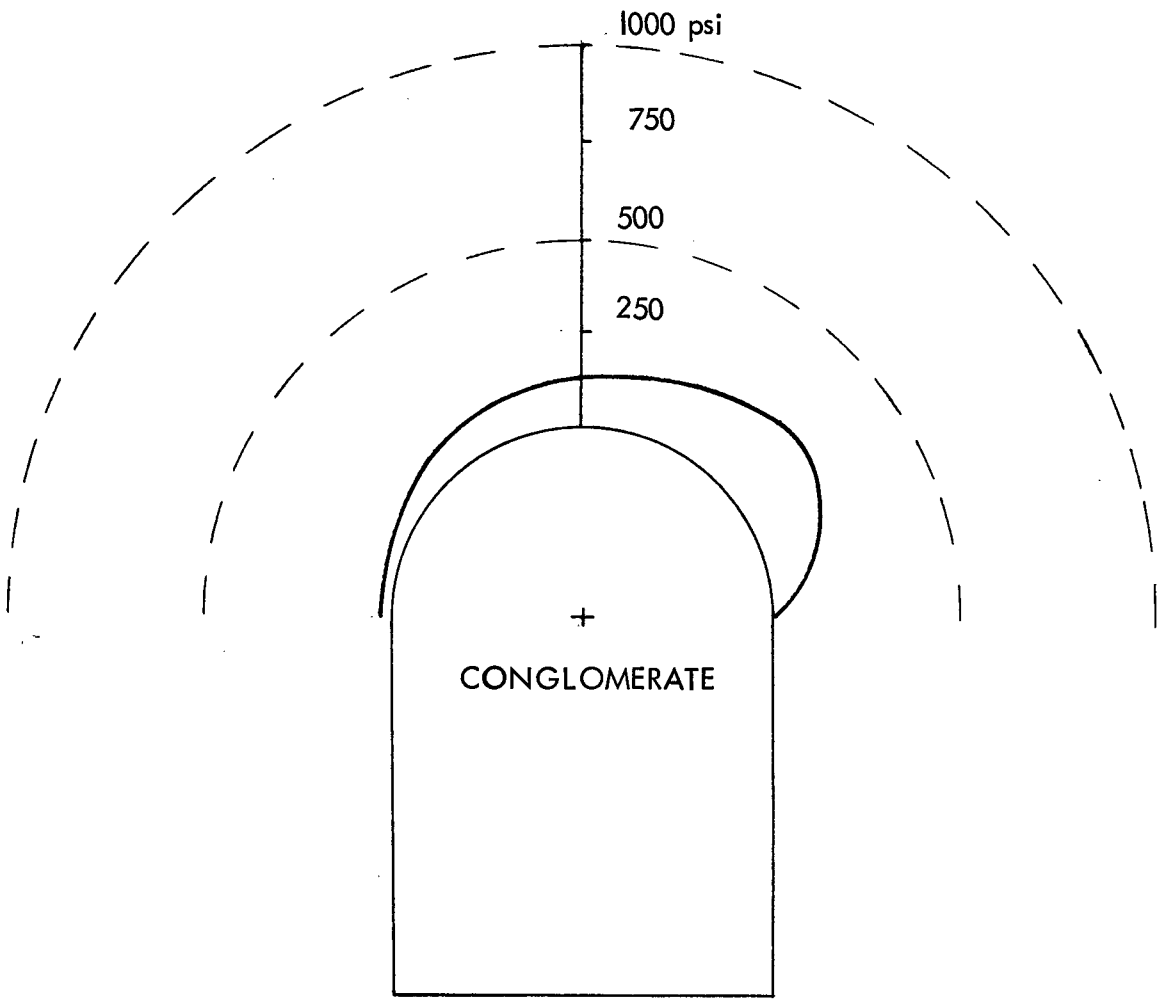

LINING PRESSURE DISTRIBUTION

STATION 67+87

FIGURE 15

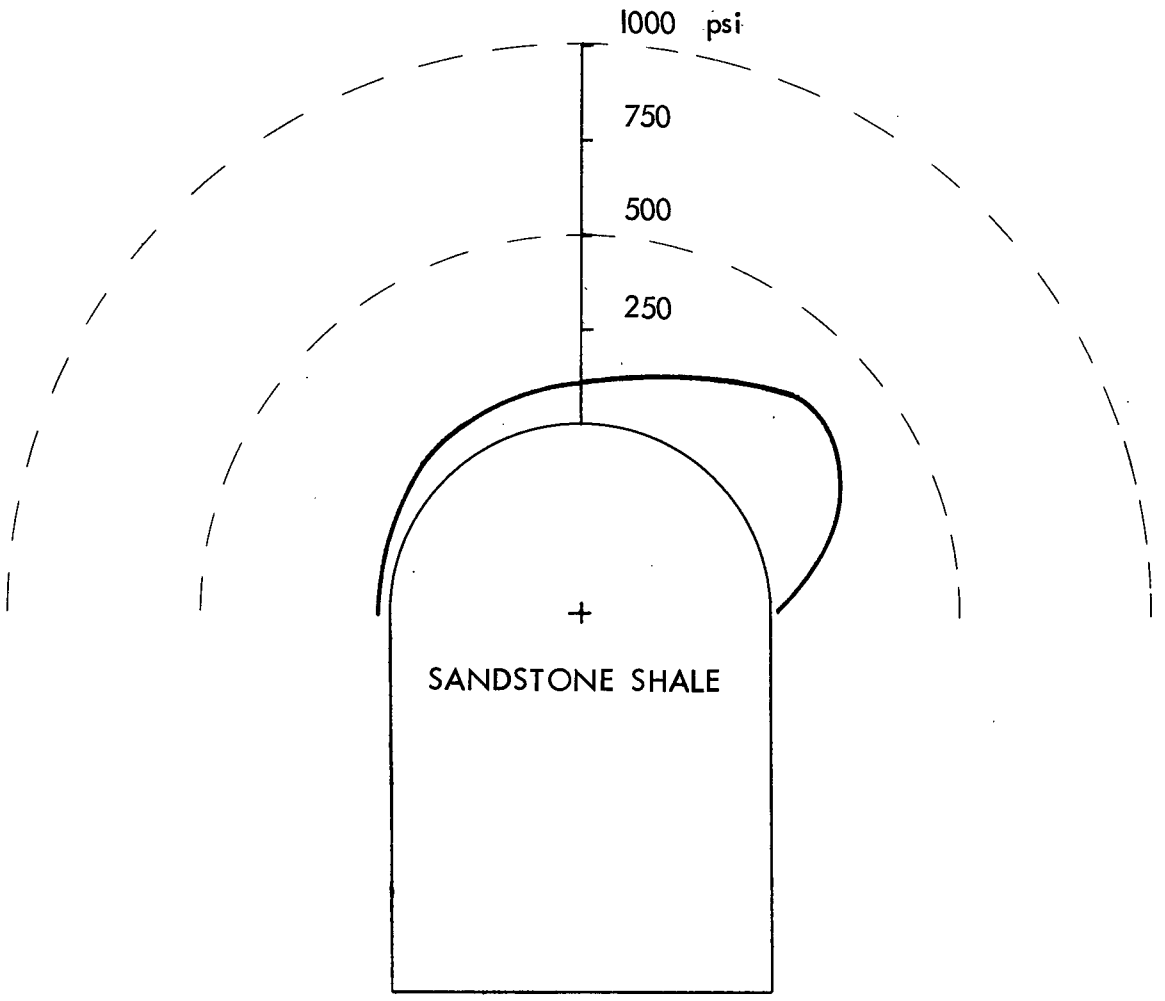

LINING PRESSURE DISTRIBUTION

STATION 60+21

FIGURE 16

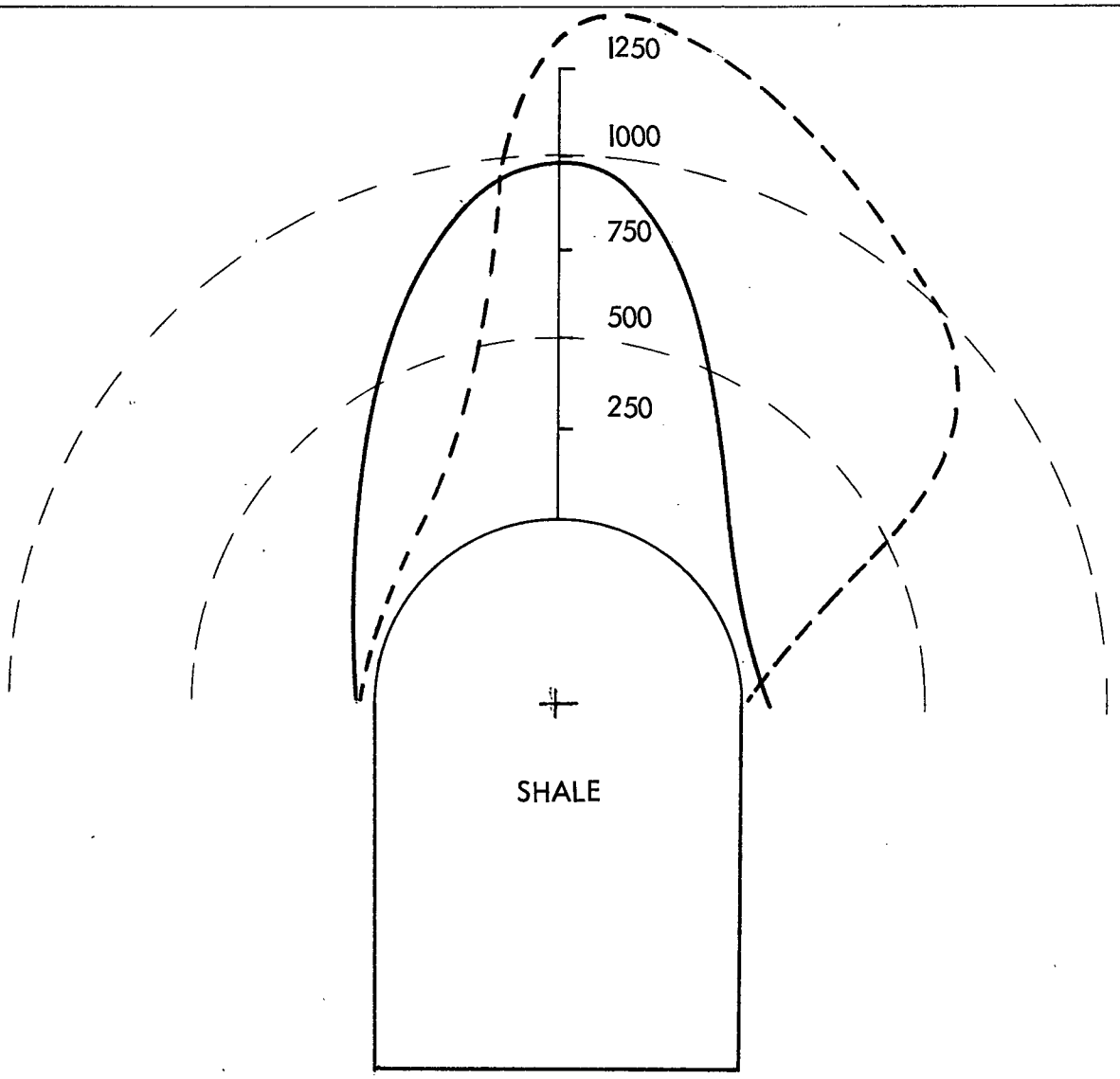

LINING PRESSURE DISTRIBUTION

STATION 48 05

FIGURE 17

——————— Pressure at rock surface

— — — — — — Pressure 4" from rock surface

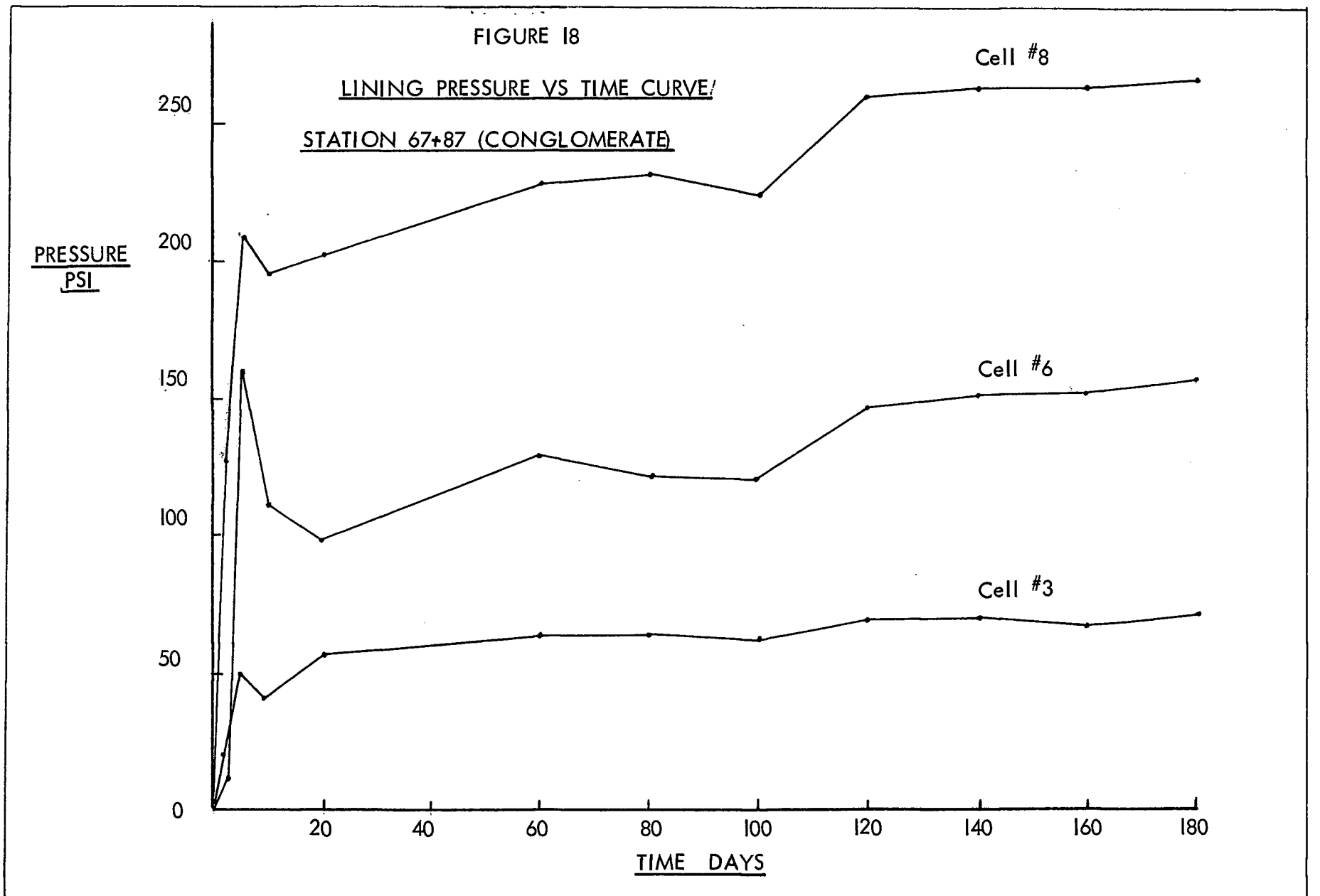
FIGURE 18
LINING PRESSURE VS TIME CURVE
STATION 67+87 (CONGLOMERATE)
PRESSURE PSI
250
200
150
100
50
0
20
40
60
80
100
120
140
160
180
TIME DAYS
Cell #8
Cell #6
Cell #3

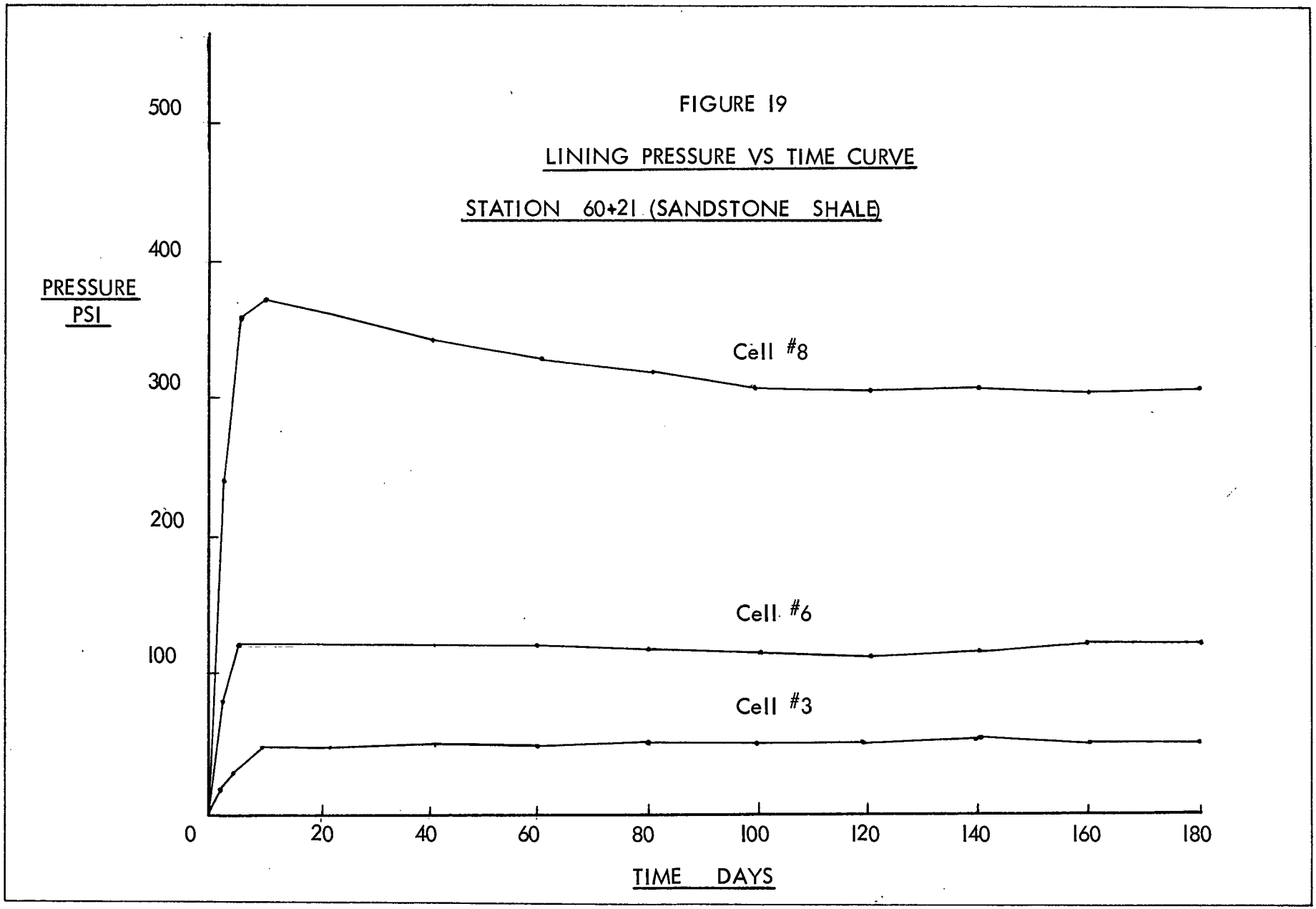
FIGURE 19
LINING PRESSURE VS TIME CURVE
STATION 60+21 (SANDSTONE SHALE)
PRESSURE PSI
500
400
300
200
100
0
20
40
60
80
100
120
140
160
180
TIME DAYS
Cell #8
Cell #6
Cell #3

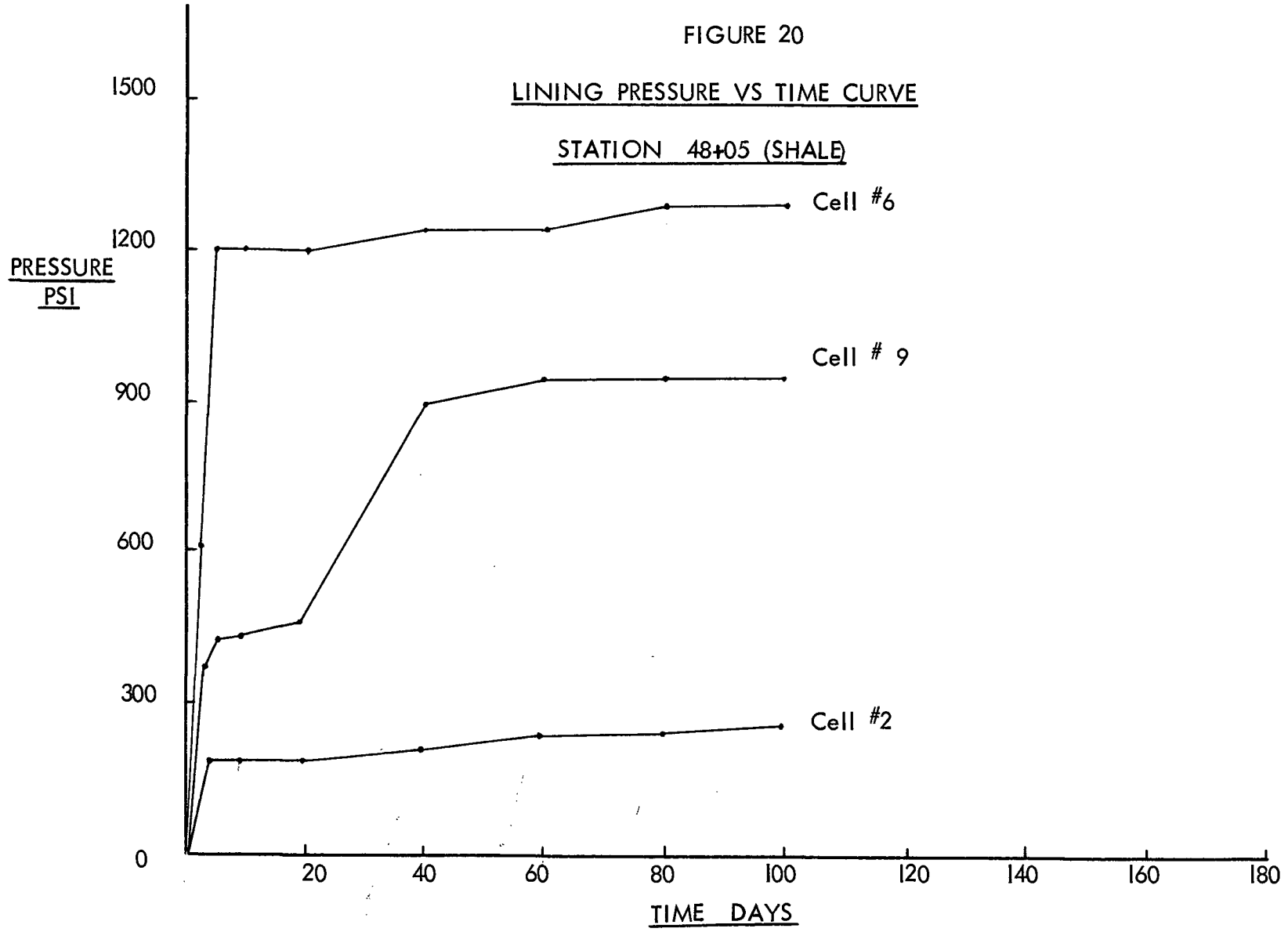

FIGURE 20

LINING PRESSURE VS TIME CURVE

STATION 48+05 (SHALE)

was flexing downwards. At positions #5 - #6 and #8 - #9 the opposite effect was indicated, that is the pressure at the rock surface was less than it was farther away from it. This condition is shown in Figure 21.

Both the rock contact cells and the concrete cells are claimed to be accurate to less than one psi, but due to the field conditions, a much less accurate system is realized. Although the cells themselves may be quite accurate, the readout device, a specially-designed hydraulic hand pump, may only be read to the nearest 10 to 20 psi. This inaccuracy is introduced with the large scale pressure gauge which is required to measure the higher pressures.

DISCUSSION OF RESULTS

Application of Overcoring Results

The photoelastic strain gauges provided an inexpensive, systematic spot-check on strains in the shotcrete lining near the surface. The level of strains recorded was quite low, and so the corresponding stresses were also low. Although the direct conversion of strain measurements to stress readings has been avoided, due to uncertainties regarding Young's modulus for shotcrete and other factors, the highest stress value obtained was in the range of 480 to 560 psi. These values were obtained using E-values computed from several laboratory compression tests, and indicate the range of results obtained from these tests.

Several other points are worthy of mention. The strain readings indicated that the greater strains normally occurred at the sides of the arch rather than in the center, and that these strains indicated not only complex, but unsymmetrical loading conditions. The presence of both tensile and compressive strains, often on the same sample as major and minor strains, confirms this conclusion. The trend of alignment of principal strain directions in the direction of the tunnel centerline may be either the result of external stress fields or, more likely, the effects of stress redistribution caused by

the tunneling operation. Moreover the configuration of the tunnel allows a much greater degree of freedom in the axial or longitudinal direction.

Discussion of Contact Cell Results

In interpreting data from the rock contact pressure cells extreme care must be taken so as not to infer too much from it. The pressures measured depend largely on the resisting and supporting ability of the shotcrete as well as the rock stress conditions. The pressure readings are likely to be a function of any or all of the following conditions.

1. the orientation of pressure cell,
2. the physical, chemical and structural properties of the rock adjacent to the opening, both of the rock itself and of the rock mass as a whole,
3. the accuracy of transferral of rock stresses to the pressure cells,
4. the thickness and rigidity of the shotcrete lining as well as its strength-time characteristics,
5. the magnitude and direction of the principal stress directions in the rock mass, and their components in the

plane of measurement, and

6. the degree of rigidity offered by the shotcrete lining due to the geometrical configuration of the lining.

Hence the actual relationship between the rock stresses and the shotcrete lining cannot be determined. However, if carefully used, the measured data provides valuable quantitative as well as qualitative information.

The pressures measured seem very high compared with conventional load assumptions made for the design of steel arch supports. (Reference #10) A maximum pressure of 100 psi, or even an average vertical pressure of 65 psi at station 6021 is high when compared with the alternate design capacity of the 8WF28 steel arches at five-foot spacing. From manufacturer's tables, the following allowable pressures may be calculated:

Assume the maximum allowable fiber stress is 27000 psi

Maximum blocking spacing is 48 inches.

For a 20 foot span the allowable load projected on the horizontal plane is 11600 lb/ft. Hence the total allowable load is P = 11600 x 20 = 232000 lb. At a five foot spacing this load is distributed over an area A = 20 x 5 = 100 ft.^{2}

Hence the allowable pressure $= \frac{232000}{100} = 2320$ psf or 16.1 psi. Either the steel sets were very underdesigned, a likelihood that is not great considering the nature of the rock and the experience of the designers, or the nature of restraint given by the shotcrete lining is far greater than that given by conventional support systems. The steel sets, had they been installed as designed would likely not have been loaded to any extent approaching 65 psi, but instead this load would have been relieved by relaxation movements in the rock. These movements would be accompanied by loosening and spalling, the weight of the loosened rock forming the load on the arch sets.

The rock contact pressures vary from station to station but the maximum pressures at all three stations occurred in the east side of the arch. Since there is no evidence of joints dipping from the east, or any other geological similarities between the three measurement stations, this asymmetry of loading could only be a result of the residual stress conditions in the rock and its effects on the stress redistribution following excavation. A gradual slope of about 1 : 20 of the ground surface may have some small effect on the asymmetric loading.

The rock contact pressures vary somewhat from station to station, but this variation appears to have no relation to the varying heights of overburden at these stations. In fact, not only are stations 6787 and 6021 at nearly the same depth, 280 and 240 feet

respectively, while differing in their contact pressures, but also stations 6021 and 4805 have very similar pressures and are depths of 240 and 140 feet respectively. From soil mechanics, the vertical pressure in a soil varies directly with the height of overburden, a condition which does not exist from these measurements. Thus, although the rock often appears to resemble a soil physically, there appears to be little justification in treating it as such in design work.

The most important aspect of the contact cell measurements is whether or not they attain an equilibrium level without producing excessive strains in the shotcrete lining. All three stations showed a leveling off of the pressure-time curve after a period of about 60 days although the cells at 6021 showed increased pressures during the period 100 to 140 days. The reason for this increased pressure is not known, although the cells again reached a level of relative equilibrium after this time. As long as this equilibrium is maintained increased stressing of the concrete is unlikely.

Discussion of Concrete Cell Results

The extreme variability of the measured concrete pressures is likely due to a number of conditions, of which the following are examples:

1. The orientation and position of the cell, not only in the arch but also with respect to the shotcrete cross-section,

2. Rock contact stresses or axial stresses,
3. Tangential stresses from the rock-shotcrete contact,
4. Strength of the rock-shotcrete bond as well as the strength-time relationship of the shotcrete,
5. The rigidity and thickness of the lining,
6. and the actual rock surface configuration, which may cause local arching and vault or dome-like effects.

From the extreme variability of the results it would appear that some or all of the above conditions affect the concrete pressures.

Although the concrete pressures were extremely variable, the pressures measured on the west side of the arch, that is the #8 or #8 - #9 positions, were consistently much higher than those on the east side. In fact at stations 6787 and 6021, the maximum pressures recorded occurred at this position. It would be unwise to assume a mode of loading from these results but it is likely that the type of loading is similar in all three cases. The pressures measured at station 4805 at different positions in the arch and at different depths at the same position support the hypothesis that the lining is bending downwards in the east side of the arch, with a hinge point situated between the west side and the center of the arch. (Figure 21) This distortion of the tunnel section is likely superimposed upon a downward movement of the arch, accompanied by a possible bending of the walls away from the opening. Such deformations and distortions

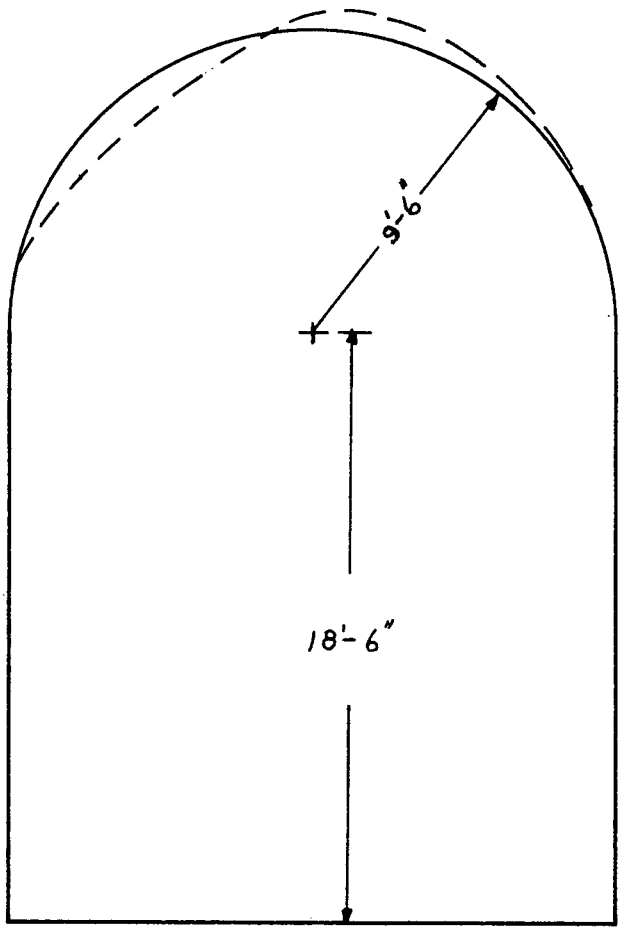

FIGURE 21 Possible character of deformation of Lining at Station 48 + 05

may be explained by the following simple analysis:

If a circular opening in an isotropic, homogeneous, elastic material is subjected to a biaxial field stress, it will tend to become ellipsoidal in shape, with inward deformations in the major principal stress direction and outward deflections in the minor direction (Figure 22).

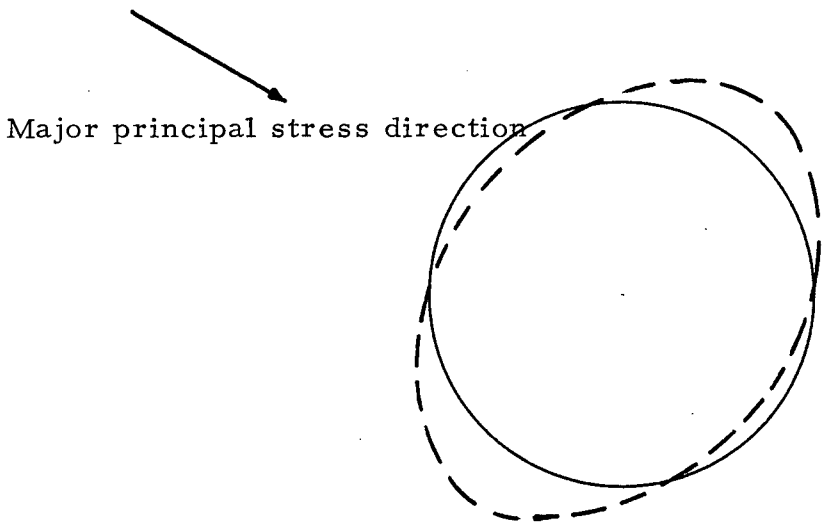

Figure 22 Deformation of circular hole in an isotropic, elastic, homogeneous material.

Such an opening in rock, would likely deflect inward to some extent in the major direction but the outward deflection in the minor direction would not be allowed by the confining stresses of the surrounding rock. Instead, due to these confining stresses the opening would likely also deflect inward somewhat although probably not to as great an extent as in the major direction. Such deflections would cause a shortening of the circumference in the upper right hand corner (and the lower left) which would produce the relatively high compressive tangential pressures in this position. Such deflections were in fact measured at the Wetzawinkel Test Gallery, Figure 3, page 13.

For the C. N. R. Tunnel, deformations of this order

would have to be measured with sensitive extensometers, or other precise measurement techniques in order to prove the hypothesis.

The concrete cell's pressure-time curves are characterized by a rapidly increasing pressure for about 10 to 60 days, followed by a relative equilibrium state, from which deviation is both very slow and relatively small. At station 6787 and 6025 the pressures are so low, compared to allowable concrete stresses, that considerable pressure increases could be accommodated without damage. At station 4805 the stresses are much higher, although they are still considerably under the allowable stresses, in this case about 2250 psi. However, due to the extreme variability of pressures it is likely that higher pressures than those measured are present at the measurement points. Therefore, in order to attempt to predict the stability of the lining at the measurement stations and in the adjacent regions of the tunnel, the relative magnitudes of measured pressures and even more important, the pressure-time relationships should be examined rather than the actual values of the pressures measured.

Although there is some relationship between the rock contact pressures and the concrete pressures, the two types of cells often react quite differently. This would indicate that factors other than the contact pressures govern the concrete pressures produced. Therefore, in considering the data, the two types of installations must be considered separately.

Although the measurements made can only safely be applied at the point of measurement, it is apparent that nearby changes in rock stresses or loading rates have some effect on the cells. At station 4805, the heading was stopped at a distance of approximately 80 feet from the measurement station. The effects of this stop on the pressure-time curves of both the rock contact and the concrete pressure cells were quite pronounced. A definite break in the curves was evident, and the cells took a considerable period of time to reach a relative equilibrium level. Other breaks in the pressure-time curves may have been initiated by breaks in the regular tunneling schedule, or the encountering of poorer tunneling conditions, a great distance from the station, but it would be unrealistic to assume that the cells are so sensitive as to record these changes at distances of up to 2000 feet.

Analysis of Support

Since the shotcrete is supporting considerable rock loads, it is important to try to analyse just how this support is given. The support action of the shotcrete may be thought of as being provided by four properties or actions of the lining.

a) The rigidity of the shotcrete lining comes not only from the strength or modulus of the material itself, but also from the continuity of the lining. Whereas steel arch sets gain three-dimensional rigidity through light tie-

bars and lagging between the sets, a shotcrete lining is a continuous lining, and hence a more rigid one. The rigidity of the shotcrete lining itself is greatly enhanced by the rigidity of the rock behind it, as this is transferred through the rock-shotcrete bond.

b) The strength of the rock-shotcrete bond affects the degree of support given in several ways. This bond allows a continuity of loading, reducing moments in the loading; it enables the shotcrete to act as an integral part of the rock itself; and its loads, particularly vertical ones, to be redistributed to the walls without transferring them to the tunnel floor. Evidence that the shotcrete lining does not transfer loads to the floor is given by measurements, since the springline concrete pressure cells record very low pressures in all cases. The effect of the bond in transferring vertical loads may be shown by the following very simplified example:

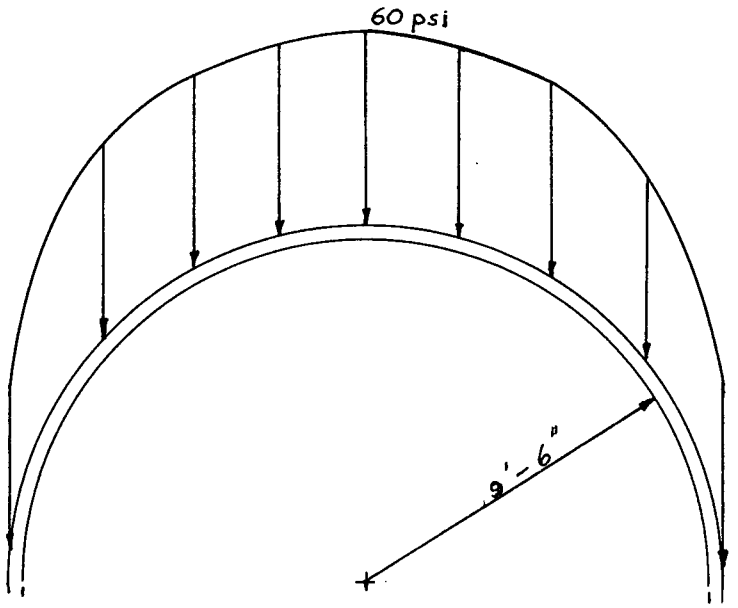

FIGURE 23 Illustration of rock-shotcrete bond effect

Assume a vertical load of 60 psi over a span of 20 feet. Considering one inch of tunnel length, the total vertical load, P is 60 x 240 = 14400 lb. Assume the strength of the bond and rock to be 300 psi, a fairly conservative estimate.

Considering that the lining is bonded only along four feet on each side of the arch, the load-carrying capacity of the length of bond would be 300 x 8 x 12 = 28800 lb.

Thus the effect of the bond is such that considerable vertical pressures may be redistributed to the walls without even shotcreting the lower part of the walls. In fact, rock pressures of up to 40 psi were measured at points where the lower walls were not shotcreted until several days after excavation.

c) The shotcrete's shear strength enables it to resist movements of blocks of rock, which attempt to move into the opening. Although any shear strength relationship is closely linked to the magnitude of forces normal to the shear surface, the effect of such forces increase the shear strength and thus provide additional safety factors to any calculations. Such a calculation may be made to indicate the manner in which the shear strength affects the supporting character of the shotcrete. This calculation assumes that a load of 60 psi is distributed over a given surface, and is inclined at 45 degrees. The loading may be simplified as a representation of a slab of rock tending to slide into the opening and being impeded by the shotcrete skin. Such assumptions may in fact be supported by the absence of side pressures or horizontal components as recorded by springline position contact pressure cells. Figure 23 shows three variations of this assumption for slabs of rock 15, 10 and 5 feet wide. Consider one inch of tunnel length.

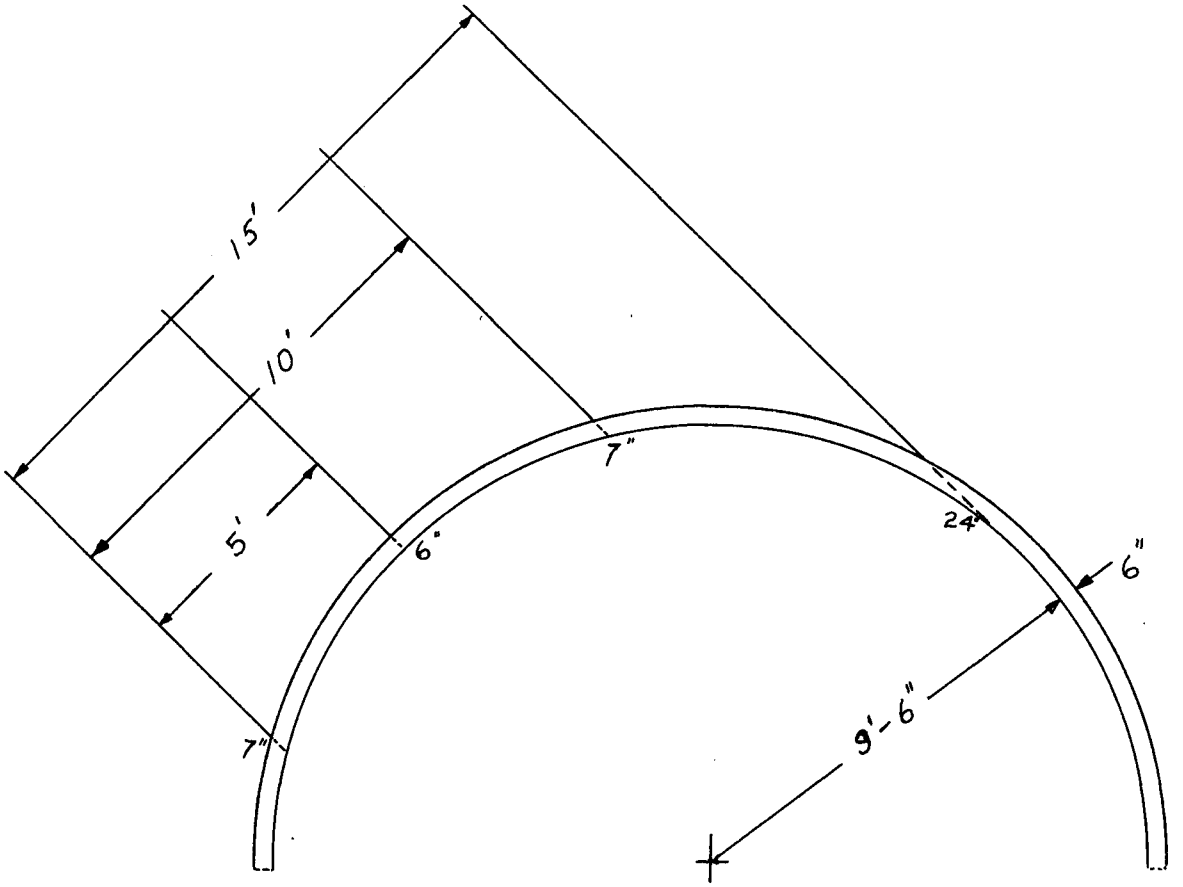

FIGURE 24 Illustration of Shotcrete shear strength effect

CASE-1. Slab is 15 feet wide

Total load = P = 15 x 12 x 60 = 10800 lb.

Rabcewicz (reference #16) gives shear strength of

shotcrete as $\approx$ 1.1 X R_f = 1200 psi, R_f = Rupture Modulus

Take τ = 600 psi, and shear force as 600 lb/in.

Length of shear path S = 24 + 7 = 31 in. from Figure 23

Total shear force = 600 x 31 = 18600 lb.

CASE 2. Slab is 10 feet wide

Total load P = 10 x 12 x 60 = 7200 lb.

Length of shear path S = 14 in.

Total shear force = 600 x 14 = 8400 lb.

CASE 3. Slab is 5 feet wide

Total load P = 5 x 12 x 60 = 3600 lb.

Length of shear path S = 13 in.

Total shear force = 600 x 13 = 7800 lb.

In all three of these cases and in fact for any width of slab the factor of safety is greater than unity. If such movements did try to occur, however, the tangential forces in the shotcrete would build up, increasing the forces normal to the shear surface, thereby increasing the shear resistance along that surface. Thus an additional safety factor would be provided.

d) The considerable deviation of the shotcrete lining outline from a theoretical arch shape, particularly in blocky rock, does not allow it to act as an arch. These deviations usually exceed the thickness of the shotcrete lining and in blocky ground a square or step-like outline is common. However local arching and dome effects give the lining some additional support. For example consider a beam or slightly-curved

arch 36 inches long with an end load of 400 psi.

Consider the beam to be 1 inch wide and 6 inches deep, corresponding to a 6 inch thick shotcrete coating.

The end load would be $P_a = 400 \times 1 \times 6$

$= 2400$ lb

$$I = \frac{bh^3}{12} = \frac{1 \times 6^3}{12} = 18 \text{ in}^4$$

Test results show that shotcrete has a high tensile-flexural strength so an allowable stress of 500 psi is not excessive for 1100 psi rupture modulus shotcrete.

$$\text{Thus} \quad f_c = \frac{P_a}{A} \pm \frac{Mc}{I} = \frac{2400}{1 \times 6} \pm \frac{P \times 36 \times 3}{4 \times 18} = 500 \text{ psi}$$

$$P = 600 \text{ lb.}$$

Were this a distributed pressure, the allowable pressure

$$p = \frac{600}{36} = \underline{16.7 \text{ psi}}$$

Since the rock is solidly bonded to the shotcrete, the rock itself assumes a load-carrying nature and a beam of unknown dimensions is formed. For illustration purposes suppose a composite beam equivalent to a shotcrete beam 12 inches thick is formed. The actual thickness of rock required to effect this result varies considerably with the rock strength, but unless the rock is almost cohesionless, or extremely fractured, this analysis is conservative.

Hence $I = \frac{bh^3}{12} = \frac{1 \times 12^3}{12} = 144 \text{ in}^4$ and

$$P_a = 400 \times 12 \times 1 = 4800 \text{ lb.}$$

and $f_c = \frac{Pa}{A} \pm \frac{Mc}{I}$

$$500 = \frac{4800}{1 \times 12} \pm \frac{P \times 36 \times 6}{4 \times 144}$$

$$P = 2400 \text{ lb.}$$

and $p = \underline{66.7 \text{ psi}}$

Hence, under such conditions, the effect of local arching or beam action plays an important part in rock support.

Since the shotcrete pressures, not the rock contact pressures are direct indications of lining stability, it is these pressures which must be considered when suggesting allowable pressure limits. Since shotcrete is capable of creeping under load, the material tends to stress relieve itself, and hence if a high stress is allowed to build up over a period of months the shotcrete tends to creep rather than rupture. For this reason a low safety factor may be acceptable. Since the allowable stress in bending is given by the ACI as 2250 psi for 5000 psi concrete, a safety factor of 1.5 would be realized if an allowable measured pressure of 1500 psi were given. As the measurement stations are only representative points, attention must be given to the deviation of pressures from their equilibrium level. Hence any continuously rising pressures should also be considered, even if these occur in relatively unstressed sections of the tunnel. Monitoring of

the pressure cells should therefore be continued at monthly intervals for at least another twelve-month interval.

In order to obtain further information that would supplement the work done at the Vancouver Tunnel, a method of precise determination of movements in the tunnel section would have been very useful. This method would likely have been best performed by a system of reliable extensometers, coupled with accurate surveying, tied in with points outside the tunnel. The instrumenting of more stations with Gloetzl cells would also have given a more representative picture of rock and shotcrete pressures.

Although final approval has yet to be given, at the time of writing no more than 300 feet of the tunnel is expected to require further support for the permanent lining. This 300 foot section occurs at the portal area where the rock is very badly weathered and the shotcrete lining was poorly applied, due to inexperience of the crews. The analysis of the lining instrumentation and the detailed inspection of the temporary shotcrete lining have indicated that the present lining will suffice for a permanent lining.

CONCLUSIONS

The shotcrete instrumentation provides valuable qualitative and quantitative information on the loading conditions of the lining, and the resulting stress distributions in that lining. Such information is unobtainable without instrumentation. New design procedures must be developed for shotcrete linings, since the design assumptions customarily used in steel design have been shown to be inapplicable.

The instrumentation program has shown that generally the lining stresses and strains are low, and that stability at three representative sections has been achieved. This information, coupled with a thorough inspection of the shotcrete lining itself, contributed greatly to the final decision to accept the specified shotcrete lining as a permanent lining. An additional indication of long-term stability of the lining may be obtained by the continuance of monitoring the hydraulic cell pressures.

Finally, the instrumentation aided in the acceptance of this new method of tunnel support, and allowed the full benefit of the economy and versatility of the method to be realized.

BIBLIOGRAPHY

1. Abel, J., 1967, Tunnel Mechanics; Quarterly of the Colorado School of Mines, Vol. 62, No. 2., April, 188 pp.

2. Biangardi, S., 1964, Die Entwicklung der Spritzbetonarbeit im Berbau Mittergerg; Sonderabdruck Aus Montan-Rundschau, Tunnel-Und Stollenbau pp 125-132.

3. Corlett, A. V. and Emery, C. L., 1959, Prestress and Stress Redistribution in Rocks Around a Mine Opening; C. I. M. M. Transactions, Vol. LXll, pp 186 198.

4. Drogsler, O., 1961, Zur Technologie des Spritzbetons; Berg und Huttenmannische Monatshefte, Vol. 106 pp 176-184.

5. Dutro, H. B., 1966, Rock Mechanics Study Determines Design of Tunnel Supports and Lining; Civil Engineering, A. S. C. E., Feb.

6. Hartmann, B. E., 1967, Rock Mechanics Instrumentation for Tunnel Construction; Terrametrics Inc., Golden, Colorado, 154 pp.

7. Hast, N., 1958, The Measurement of Rock Pressures in Mines; Sveriges Geological Undersokn, Arsbok 52, 3, Stockholm, 188 pp.

8. Hawkes, I, and Moxon, S, 1965, The Measurement of In Sites Rock Stress Using the Photoelastic Biaxial Gauge with The Core Relief Technique; Int. J. Rock Mech. Min. Sci. Vol. 2, pp 405-419.

9. Kobler, H. G., 1966, Dry-Mix Coarse Aggregate Shotcrete as Underground Support; Shotcreting, A. C. I. Pub. SP-14 223 pp.

10. Parker, J., 1966, How Moisture Affects Mine Openings; Engineering and Mining Journal, Nov., pp 95-97.

11. Proctor, R. V., and White, T. L., 1946, Rock Tunneling With Steel Supports; Commercial Shearing and Stamping Co., Youngstown, Ohio. pp 282.

12 Quadrio Curzio, P., 1966, Il Nuovo Systemi di Construzione di Gallerie; Il Monitor Tecnico, Vol. I.

13. _____, Nobili, F., and Berbenni, P., 1967, The Influence of Added Substances in Reinforced Shot Concrete; L' Energia Ellettrica, N. 1, Vol XLIV.

14. _____, 1967, Freeway Projects With Particular Attention to the Construction of Tunnels in Difficult Ground; Autostrade, Vol. 3, March.

15. Rabcewicz, L. V., 1954, Bolted Support for Tunnels; Water Power, April pp. 150-155, May pp. 171-175.

16. _____, 1955-1956, Effect of Modern Constructional Methods on Tunnel Design; Water Power, Dec. pp. 452-457, Jan. pp. 25-29.

17. _____, 1964-1965, The New Austrian Tunneling Method; Water Power, Nov., Dec., Jan.

18. Roberts, A., Emery, C. L., Chakravarty, P. K., 1961-1962, Photoelastic Coating Techniques Applied to Research in Rock Mechanics; Transactions of the I. M. M., Vol. 71, Part 10.

19. Rotter, E., 1961, Sprayed Concrete Utilization in Underground Mining; Berg-und Huttenmannische Monasheft: Spritzbeton als Strecpenansben, pp. 152-165.

APPENDICES

APPENDIX I Underground Operating Cycle

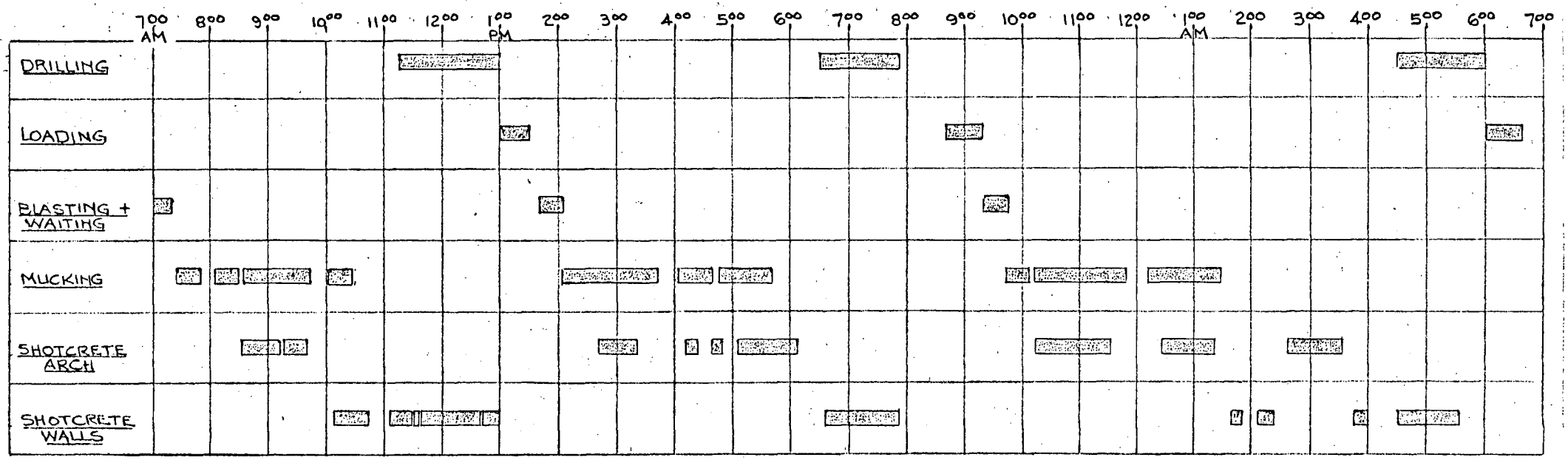

CANADIAN NATIONAL RAILWAYS
VANCOUVER TUNNEL PROJECT

UNDERGROUND OPERATING CYCLE

APPENDIX II

Tunnel Instrumentation Location and Geology

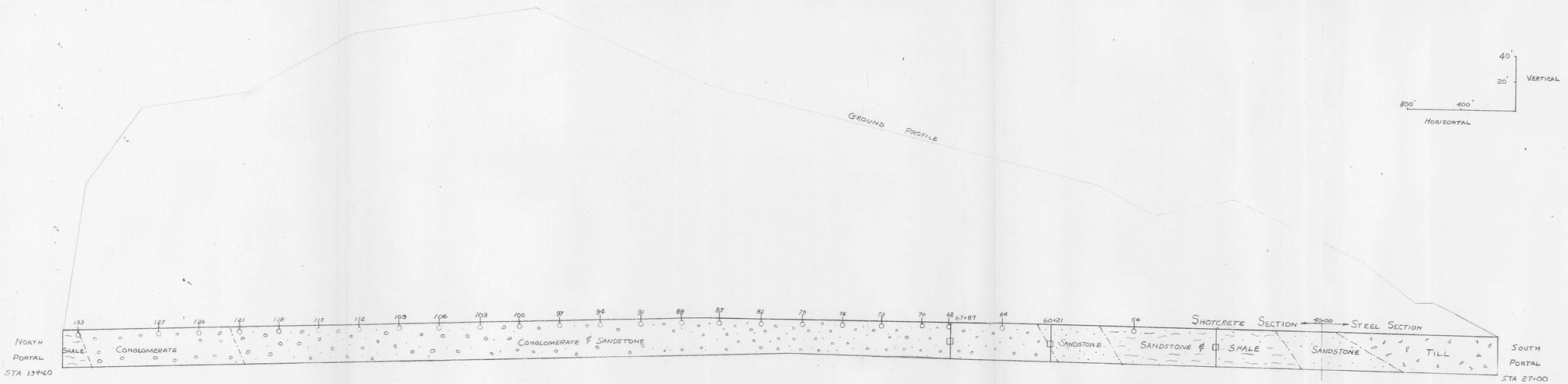

LEGEND

- □ HYDRAULIC CELL STATION
- ○ OVERCORING STATION

No.	DATE	REVISIONS	BY
3			
2			
1			

RELATED PLANS

CN

VANCOUVER TERMINAL PROJECT

CANADIAN NATIONAL RAILWAYS — MOUNTAIN REGION

OFFICE OF PROJECT CO-ORDINATOR — BURNABY, B.C.

APPROVED:

PROJECT CO-ORDINATOR

REGIONAL ENGINEER

GENERAL MANAGER

DOLMAGE, MASON & STEWART LTD.

CONSULTING ENGINEERS — VANCOUVER, B.C.

TUNNEL INSTRUMENTATION LOCATION AND GEOLOGY

SCALE: As Shown

DRAWN BY:	CHECKED BY:	CONSULTANT APPROVAL:
APPROVED BY:		DATE:
DATE:		DWG. No.

APPENDIX III

Tunnel Plan of Instrumentation Location

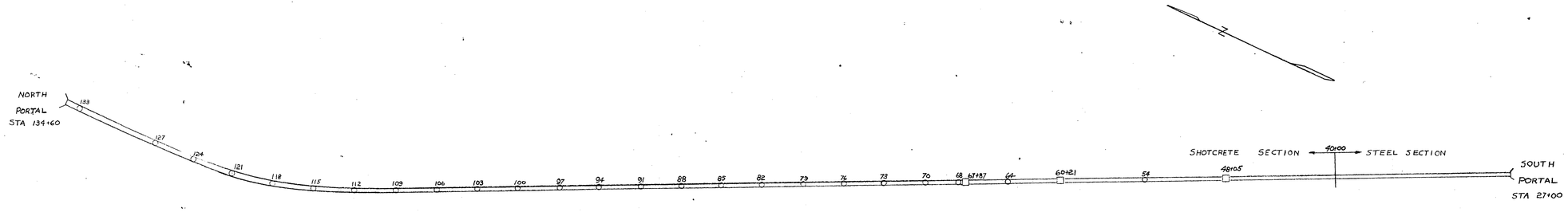

LEGEND

□ HYDRAULIC CELL STATION

○ OVERCORING STATION

No.	DATE	REVISIONS	BY
3			
2			
1			

RELATED PLANS

CN

VANCOUVER
TERMINAL
PROJECT

CANADIAN NATIONAL RAILWAYS — MOUNTAIN REGION

OFFICE OF PROJECT CO-ORDINATOR — BURNABY, B.C.

APPROVED:

PROJECT CO-ORDINATOR

REGIONAL ENGINEER

GENERAL MANAGER

DOLMAGE, MASON & STEWART LTD.

CONSULTING ENGINEERS — VANCOUVER, B.C.

PLAN OF TUNNEL INSTRUMENTATION LOCATION

SCALE: 1" = 400'

DRAWN BY:	CHECKED BY:	CONSULTANT APPROVAL:
APPROVED BY:		DATE:
DATE:		DWG. No.