ON SOME SEPARATION AXIOMS

by

PETER FRITZ MAH
B.A., University of Saskatchewan, 1962

A THESIS SUBMITTED IN PARTIAL FULFILMENT OF
THE REQUIREMENTS FOR THE DEGREE OF

MASTER OF ARTS

in the Department
of
Mathematics

We accept this thesis as conforming to the
required standard

THE UNIVERSITY OF BRITISH COLUMBIA

August, 1965

In presenting this thesis in partial fulfilment of the requirements for an advanced degree at the University of British Columbia, I agree that the Library shall make it freely available for reference and study. I further agree that permission for extensive copying of this thesis for scholarly purposes may be granted by the Head of my Department or by his representatives. It is understood that copying or publication of this thesis for financial gain shall not be allowed without my written permission.

Department of Mathematics

The University of British Columbia
Vancouver 8, Canada

Date August, 1965

ABSTRACT

Relations between pairs of separation axioms are considered. Given two separation axioms, it is investigated whether or not a topological space having the property of one of the separation axioms has the property of the other. Eighteen separation axioms are considered and the relation between the members of pairs of separation axioms is determined in every possible case. That is, with each pair of separation axioms there is associated a theorem showing the relative strengths of the members or an example showing their relative independence.

As a secondary interest, some characterizations of most of the eighteen separation axioms are given. Also some necessary conditions for normal spaces and completely normal spaces are generalized.

TABLE OF CONTENTS

ACKNOWLEDGEMENTS

I wish to thank Dr. D.W. Bressler for his suggestion of the topic and his guidance throughout the writing of this thesis. I also wish to thank Dr. J.V. Whittaker for his assistance in reading Hewitt's paper.

Finally, I wish to thank the University of British Columbia and the National Research Council for their financial help.

1. INTRODUCTION

Urysohn gave the first systematic treatment of separation axioms in a paper published in 1925 [12][1]. Since that time there have only been a few papers devoted to a full treatment of the separation axioms. In 1951, Freudenthal and van Est [3] gave a more detailed discussion than Urysohn. However, these works were devoted to separation axioms stronger than T_1 (definition 2.12.9). Youngs [15] published a paper in 1943 on a separation axiom stronger than T_0 (definition 2.12.1) but weaker than T_1. Recently in 1962, Aull and Thron [1] introduced seven new separation axioms between T_0 and T_1.

We shall consider eighteen separation axioms, namely: T_0, T_{UD}, T_D, T_F, T_Y, T_{YS}, T_{DD}, T_{FF}, T_1, T_2, regular, T_3, completely regular, Tychonoff, normal, T_4, completely normal and T_5. Their definitions are given in 2.12.

In section 3, some characterizations of most of the separation axioms are given. Also, some necessary conditions for normal spaces and completely normal spaces are generalized.

In section 4, the relations between members of pairs of separation axioms are assembled. The results of this section are summarized in a table on page 45. Finally a few observations are made.

---

1. Numbers in the square bracket refer to the bibliography at the end.

2. DEFINITIONS AND NOTATIONS

2.1. Basic Definitions and Notations.

2.1.1. $\emptyset$ denotes the empty set.

2.1.2. If X is a set and J a family of subsets of X, then J is a topology for X if and only if the union of members of J is a member of J, and the intersection of a finite number of members of J is a member of J.

2.1.3. The pair (X,J) is a topological space if and only if J is a topology for the set X and X is the union of members of J.

Let (X,J) be a topological space and $A \subset X$ in the following.

2.1.4. A is an open set, or A is open, if and only if A is a member of J.

2.1.5. A is a closed set, or A is closed, if and only if $X \sim A$ is a member of J, where $X \sim A$ is the complement of A with respect to X.

2.1.6. A is a neighborhood of a point $x \in X$ if and only if there exists an open set G such that $x \in G \subset A$.

2.1.7. $\mathcal{N}(x)$ is the set of all neighborhoods of x.

2.1.8. x is a limit point of A if and only if for each $N \in \mathcal{N}(x)$, $(N \sim \{x\}) \cap A \neq \emptyset$.

2.1.9. The derived set of A, A', is the set of all limit points of A.

2.1.10. The closure of A, $\overline{A}$, is $A \cup A'$.

2.1.11. The interior of A, A^i, is the union of all open sets in A.

2.1.12. The exterior of A, A^e, is the union of all open sets disjoint from A.

2.1.13. REMARK. In view of 2.1.2 and 2.1.5 we can specify a topology by stating what its closed sets are.

2.2. THEOREM. $\overline{A}$ <u>is closed</u>.

2.3. THEOREM. $\overline{A}$ <u>is the intersection of all closed sets containing</u> A.

2.4. THEOREM. A^i <u>and</u> A^e <u>are open</u>.

2.5. WEAKLY SEPARATION, KERNEL, SHELL, AND DEGENERATE SET.

If (X,J) is a topological space, $A \subset X$, $B \subset X$ and $x \in X$ then following Aull and Thron [1] in the following definitions,

2.5.1. [13] A is weakly separated from B, $A \vdash B$, if and only if there exists an open set G such that $A \subset G$ and $G \cap B = \emptyset$.

2.5.2. $A \not\vdash B$ if A is not weakly separated from B.

2.5.3. The kernel of a point x, $\widehat{\{x\}}$, is the set of all y for which $\{x\} \not\vdash \{y\}$.

2.5.4. The shell of a point x is the set $\widehat{\{x\}} = \widehat{\{x\}} \sim \{x\}$.

2.5.5. $N_S(X)$ is the set of all $x \in X$ such that $\widehat{\{x\}} = \emptyset$.

2.5.6. $N_D(X)$ is the set of all $x \in X$ such that $\{x\}' = \emptyset$.

2.5.7. $\langle x \rangle$ is the set $\overline{\{x\}} \cap \widehat{\{x\}}$.

2.5.8. A is degenerate if and only if A contains at most one point.

2.6. A and B are separated if and only if $(A \cap \overline{B}) \cup (\overline{A} \cap B) = \emptyset$.

2.7. HOMEOMORPHISM.

Let (X,J) and $(Y,\mathcal{U})$ be topological spaces in the following.

2.7.1. A map f from (X,J) onto $(Y,\mathcal{U})$ is a homeomorphism if and only if f is a 1-1 continuous map such that f^{-1} is continuous.

2.7.2. (X,J) and $(Y,\mathcal{U})$ are homeomorphic if and only if there exists a homeomorphism from (X,J) onto $(Y,\mathcal{U})$.

2.8. DIRECTION, NET, FILTER AND RUN.

We follow Moore and Smith [9] in the following definitions.

2.8.1. A binary relation $\geq$ directs a set D if and only if (i) D is a non-void set; (ii) if $m, n, p \in D$ such that $m \geq n$ and $n \geq p$ then $m \geq p$; (iii) if $m \in D$ then $m \geq m$; (iv) if $m, n \in D$ then there exists $p \in D$ such that $p \geq m$ and $p \geq n$.

We follow Kelley [7] in the following definitions.

2.8.2. A net is a pair $(S,\geq)$ such that S is a function and $\geq$ directs the

domain S. Sometimes we denote a net by $\{S_n ; n\varepsilon D, \leq\}$ or, simply S.

Let $\{S_n; n\varepsilon D, \geq\}$ be a net and A a set in the following.

2.8.3. $\{S_n; n\varepsilon D, \geq\}$ is in A if and only if $S_n \varepsilon A$ for all n.

2.8.4. $\{S_n; n\varepsilon D, \geq\}$ is eventually in A if and only if there is an $m\varepsilon D$ such that if $n\varepsilon D$ and $n \geq m$ then $S_n \varepsilon A$.

2.8.5. A net S in a topological space (X,J) converges to $x \varepsilon X$ if and only if S is eventually in each neighborhood of x.

We follow Cartan [2] in the following definition.

2.8.6. A nonvoid family $\mathcal{F}$ of subsets of a set X is a filter in a topological space (X,J) if and only if (i) $\emptyset \notin \mathcal{F}$; (ii) if $F_1 \varepsilon \mathcal{F}$ and $F_1 \subset F$ then $F \varepsilon \mathcal{F}$; (iii) if $F_1, F_2 \varepsilon \mathcal{F}$ then $F_1 \cap F_2 \varepsilon \mathcal{F}$.

2.8.7. A filter $\mathcal{F}_1$ is a refinement of the filter $\mathcal{F}_2$ if and only if every $F_1 \varepsilon \mathcal{F}_1$ is contained in some $F_2 \varepsilon \mathcal{F}_2$.

2.8.8. A filter $\mathcal{F}$ in a topological space (X,J) converges to a point $x \varepsilon X$ if and only if every neighborhood of x contains some $F \varepsilon \mathcal{F}$.

We follow Kenyon and Morse [8] in the following definitions.

2.8.9. A non-void relation R is a run if and only if for every $x,y\varepsilon$ domain R there is some $z\varepsilon$ domain R such that for every t, if $(z,t)\varepsilon R$ then (x,t) and $(y,t)\varepsilon R$.

2.8.10. The vertical section Rx or vsRx is the set $\{y: (x,y)\varepsilon R\}$.

2.8.11. A run R is eventually in A if and only if for some $x\varepsilon$ domain R, $vsRx \subset A$.

2.8.12. A run R in a topological space (X,J) converges to x if and only if R is eventually in every neighborhood of x.

We follow Weil [14] in the following definition.

2.9. UNIFORMITY.

Let U and V be relations in the following.

2.9.1. U^{-1}, the inverse relation, is the set of all ordered pair (x,y) such that $(y,x) \varepsilon U$.

2.9.2. If $U = U^{-1}$ then U is symmetric.

2.9.3. The composition $U \circ V$ of U and V is the set of all pairs (x,z) such that for some y, $(x,y) \varepsilon V$ and $(y,z) \varepsilon U$.

2.9.4. The identity relation, or the diagonal, $\Delta(X)$ or Δ, is the set of all pairs (x,x) for $x \varepsilon X$.

2.9.5. If $A \subset X$ and U is a relation then the set $U[A]$ is the set of all y such that $(x,y) \varepsilon U$ for some $x \varepsilon A$.

2.9.6. We write $U[x]$ for $U[\{x\}]$.

2.9.7. A uniformity for a set X is a non-void family $\mathcal{U}$ of subsets of $X \times X$ such that (i) each member of $\mathcal{U}$ contains the diagonal Δ; (ii) if $U \varepsilon \mathcal{U}$ then $U^{-1} \varepsilon \mathcal{U}$; (iii) if $U \varepsilon \mathcal{U}$ then for some $V \varepsilon \mathcal{U}$, $V \circ V \subset U$; (iv) if $U, V \varepsilon \mathcal{U}$ then $U \cap V \varepsilon \mathcal{U}$; (v) if $U \varepsilon \mathcal{U}$ and $U \subset V$ then $V \varepsilon \mathcal{U}$.

2.8.9. If $\mathcal{U}$ is a uniformity for X then the pair $(X, \mathcal{U})$ is a uniform space.

2.9.9. If $(X, \mathcal{U})$ is a uniform space, then the topology J of the uniformity $\mathcal{U}$, or the uniform topology, is the family of all subsets of X such that for each $x \varepsilon G$ there is a $U \varepsilon \mathcal{U}$ such that $U[x] \subset G$.

2.10. [4] An ordered n-tuple $(A_1, \ldots, A_n)$ of subsets of a set X is similar to an ordered n-tuple $(B_1, \ldots, B_n)$ of subsets of a set Y if for any selection of indices $i_1, \ldots, i_k$, $A_{i_1} \cap \ldots \cap A_{i_k} = \emptyset$ if and only if $B_{i_1} \cap \ldots \cap B_{i_k} = \emptyset$.

2.11. POINT FINITE AND LOCALLY FINITE FAMILIES.

Let $\{A_i : i \varepsilon I\}$ be a family of subsets of a set X in the following.

2.11.1. $\{A_i : i \varepsilon I\}$ is point-finite if and only if each point of X is covered only by a finitely many sets A_i.

2.11.1. $\{A_i : i\varepsilon I\}$ is locally finite if and only if every point $x\varepsilon X$ has a neighborhood which intersects only a finite number of A_i .

2.12. SEPARATION AXIOMS.

Except for 2.11.2 - 2.11.18 the following definitions are familiar to the reader.

2.12.1. A topological space (X,J) is a T_0-space if and only if for every $x, y\varepsilon X$, $x\neq y$, there exists an open set U such that $x\varepsilon U$ and $y\notin U$ or there exists an open set V such that $y\varepsilon V$ and $x\notin V$.

The next seven separation axioms are due to Aull and Thron [1] .

2.12.2. A topological space (X,J) is a T_{UD}-space if and only if for every $x\varepsilon X$, $\{x\}'$ is the union of disjoint closed sets.

2.12.3. A topological space (X,J) is a T_D-space if and only if for every $x\varepsilon X$, $\{x\}'$ is a closed set.

2.12.4. A topological space (X,J) is a T_F-space if and only if for every $x\varepsilon X$ and every finite subset F of X such that $x\notin F$ then either $x \vdash F$ or $F \vdash x$.

2.12.5. A topological space (X,J) is a T_Y-space if and only if for all $x, y\varepsilon X$, $x\neq y$, then $\overline{\{x\}} \cap \overline{\{y\}}$ is degenerate.

2.12.6. A topological space (X,J) is a T_{YS}- space if and only if for all $x,y\varepsilon X$, $x\neq y$, then $\overline{\{x\}} \cap \overline{\{y\}}$ is either $\emptyset$, $\{x\}$ or $\{y\}$.

2.12.7. A topological space (X,J) is a T_{FF}-space if and only if for every finite subsets F_1, F_2 of X with $F_1 \cap F_2 = \emptyset$ then either $F_1 \vdash F_2$ or $F_2 \vdash F_1$.

2.12.8. A topological space (X,J) is a T_{DD}-space if and only if (X,J) is a T_D-space and for all $x,y\varepsilon X$, $x\neq y$, $\{x\}' \cap \{y\}' = \emptyset$.

2.12.9. A topological space (X,J) is a T_1-space if and only if for all $x,y\varepsilon X$, $x\neq y$, then there exists an open set U such that $x\varepsilon U$ and $y\notin U$.

2.12.10. A topological space (X,J) is a T_2-space or a Hausdorff space if and only if for every $x,y\varepsilon X$, $x\neq y$, there exists disjoint open sets U, V such that $x\varepsilon U$ and $y\varepsilon V$.

2.12.11. A topological space (X,J) is a regular space if and only if for every closed subsets A and $x \notin A$ there exists open sets U, V such that $x \in U$ and $A \subset V$.

2.12.12. A topological space (X,J) is a T_3-space if and only if (X,J) is a regular, T_1-space.

2.12.13. A topological space (X,J) is a completely regular space if and only if for every $x \in X$ and a closed subset A such that $x \notin A$ then there exists a continuous function f on X to $[0,1]$ such that $f(x)=0$ and $f[A] = \{1\}$.

2.12.14. A topological space (X,J) is a Tychonoff space if and only if (X,J) is a completely regular, T_1-space.

2.12.15. A topological space (X,J) is a normal space if and only if for every disjoint closed subsets A and B there exists two disjoint open sets U and V such that $A \subset U$ and $B \subset V$.

2.12.16. A topological space (X,J) is a T_4-space if and only if (X,J) is a normal T_1-space.

2.12.17. A topological space (X,J) is a completely normal space if and only if for every separated subsets A and B of X there exists disjoint open sets U, V such that $A \subset U$ and $B \subset V$.

2.12.18. A topological space (X,J) is a T_5-space if and only if (X,J) is a completely normal T_1-space.

3. The main purpose in this section is to give some characterizations of some of the separation axioms. Also a number of generalization of necessary conditions are given in 3.20.2, 3.20.3, and 3.21.6. The results in 3.1 - 3.7 hold in arbitrary topological space.

3.1 - 3.14.10 are results due to Aull and Thron [1].

Let (X,J) be a topological space and $x,y \in X$.

3.1. THEOREM. <u>If</u> $y \in \overline{\{x\}}$ <u>then</u> $\overline{\{y\}} \subset \overline{\{x\}}$.

<u>Proof</u>. The result follows immediately from the fact that $\overline{\{y\}} = \bigcap \{C : C \text{ is closed and } y \in C\}$.

3.2. THEOREM. <u>If</u> $y \in \widehat{\{x\}}$ <u>then</u> $\widehat{\{y\}} \subset \widehat{\{x\}}$.

<u>Proof</u>. The result follows immediately from the fact that $\widehat{\{y\}} = \bigcap \{G : G \text{ is open and } y \in G\}$.

The next theorem is an easy consequence of the definitions of $\overline{\{x\}}$ and $\widehat{\{x\}}$.

3.3. THEOREM. $y \in \widehat{\{x\}}$ <u>if and only if</u> $x \in \overline{\{y\}}$.

From 3.3., together with the fact that $y \in \widehat{\{x\}}$ implies $y \neq x$, we have

3.4. THEOREM. $y \in \widehat{\{x\}}$ <u>if and only if</u> $x \in \{y\}'$.

3.5. THEOREM. <u>For every</u> $x \in X$, $\widehat{\{x\}}$ <u>is degenerate if and only if for every</u> $x,y \in X$, $x \neq y$, $\{x\}' \cap \{y\}' = \emptyset$.

<u>Proof</u>. The result is immediate if we note that $z \in \{x\}' \cap \{y\}'$ if and only if $x,y \in \widehat{\{z\}}$.

3.6. THEOREM. <u>If</u> $y \in \langle x \rangle$ <u>then</u> $\langle y \rangle = \langle x \rangle$.

Proof. If $y \in \overline{\{x\}}$ then from 3.1 and 3.3 $\overline{\{y\}} \subset \overline{\{x\}}$ and $x \in \widehat{\{y\}}$. From 3.2 then, $\widehat{\{x\}} \subset \widehat{\{y\}}$. Similarly if $y \in \widehat{\{x\}}$ then $\widehat{\{y\}} \subset \widehat{\{x\}}$ and $\overline{\{x\}} \subset \overline{\{y\}}$. Hence $\overline{\{y\}} = \overline{\{x\}}$ and $\widehat{\{y\}} = \widehat{\{x\}}$ i.e., $\langle x \rangle = \langle y \rangle$.

As an immediate consequence of 3.6 we have

3.7. THEOREM. *For all* $x,y\varepsilon X$ *either* $\langle x\rangle = \langle y\rangle$ or $\langle x\rangle \cap \langle y\rangle = \emptyset$.

3.8. CHARACTERIZATIONS OF T_0-SPACES.

In the following, 3.8.1 is an easy consequence of the definition. From 3.8.2 to 3.8.9, except 3.8.7, each condition is a restatement of 3.8.1 in different terminology.

3.8.1. THEOREM. *A topological space* (X,J) *is a* T_0-*space if and only if for every* $x,y\varepsilon X$, $x\neq y$, *either* $\{x\}\vdash\!\dashv\{y\}$ *or* $\{y\}\vdash\!\dashv\{x\}$.

3.8.2. THEOREM. *A topological space* (X,J) *is a* T_0-*space if and only if* $y\varepsilon\overline{\{x\}}$ *then* $x\notin\overline{\{y\}}$ for $x \neq y$.

3.8.3. THEOREM. *A topological space* (X,J) *is a* T_0-*space if and only if* $y\varepsilon\{x\}'$ *then* $\overline{\{y\}} \subset \{x\}'$.

3.8.4. THEOREM. *A topological space* (X,J) *is a* T_0-*space if and only if* $y\varepsilon\widehat{\{x\}}$ *then* $x\notin\widehat{\{y\}}$ for $x \neq y$.

3.8.5. THEOREM. *A topological space* (X,J) *is a* T_0-*space if and only if* $y\varepsilon\overset{\frown}{\{x\}}$ *then* $\overset{\frown}{\{y\}} \subset \overset{\frown}{\{x\}}$.

3.8.6. THEOREM. *A topological space* (X,J) *is a* T_0-*space if and only if* $(\overline{\{x\}} \cap \{y\}) \cup (\{x\} \cap \overline{\{y\}})$ *is degenerate.*

3.8.7. THEOREM. *A topological space* (X,J) *is a* T_0-*space if and only if for every* $x\varepsilon X$, $\{x\}'$ *is the union of closed sets.*

Proof. We prove this by showing the necessary condition stated above is equivalent to that of 3.8.3.

Suppose the necessary condition above is satisfied. If $y\varepsilon\{x\}'$ then there

exists a closed set C_1 such that $y \varepsilon C_1 \subset \{x\}'$. Hence $\overline{\{y\}} \subset C_1 \subset \{x\}'$ and the necessary condition in 3.8.3 is satisfied.

Suppose the necessary condition in 3.8.3 is satisfied. Let $x \varepsilon X$. Then for every $y \varepsilon \{x\}'$, $\overline{\{y\}} \subset \{x\}'$. Since $\overline{\{y\}}$ is closed, $\{x\}'$ is the union of closed sets.

3.8.8. THEOREM. <u>A topological space</u> (X,J) <u>is a</u> T_0-<u>space if and only if for every</u> $x \varepsilon X$, $\{x\}' \cap \widehat{\{x\}} = \emptyset$.

3.8.9. THEOREM. <u>A topological space</u> (X,J) <u>is a</u> T_0-<u>space if and only if for every</u> $x \varepsilon X$, $\langle x \rangle = \{x\}$.

3.9. CHARACTERIZATION OF T_D-SPACES.

3.9.1. THEOREM. <u>A topological space</u> (X,J) <u>is a</u> T_D-<u>space if and only if for every</u> $x \varepsilon X$ <u>there exists an open set</u> G <u>and a closed set</u> C <u>such that</u> $\{x\} = G \cap C$.

<u>Proof</u>. If (X,J) is a T_D-space then $\{x\}'$ is closed. Let $G = X \sim \{x\}'$ and $C = \overline{\{x\}}$. Then $\{x\} = G \cap C$.

If the necessary condition stated in 3.9.1 holds then $\overline{\{x\}} \subset C$ for some closed C. Then $\{x\} = G \cap \overline{\{x\}}$. Hence we have $\{x\}' = \overline{\{x\}} \sim \{x\} = \overline{\{x\}} \sim [G \cap \{x\}] = \overline{\{x\}} \cap (X \sim G)$, which is closed. Therefore (X,J) is a T_D-space.

3.9.2. THEOREM. <u>A topological space</u> (X,J) <u>is a</u> T_D-<u>space if and only if for all sets</u> $A \subset X$, A' <u>is closed</u>.

<u>Proof</u>. If the necessary condition stated in 3.9.2 holds then for every $x \varepsilon X$, $\{x\}' = \overline{\{x\}}'$ is closed and hence (X,J) is a T_D-space.

Let (X,J) be a T_D-space. Let $A \subset X$ and x an accumulation point of A'. Then every neighborhood $N \varepsilon \mathcal{N}(x)$ contains points of A' other than x. In particular $(X \sim \{x\}') \cap N$ is a neighborhood of x. Let $y \varepsilon (X \sim \{x\}') \cap N \cap A'$, $y \neq x$. Since $(X \sim \{x\}') \cap N$ is a neighborhood of y contained in N, $y \varepsilon A'$ implies there exists $z \neq y$ of A such that $z \varepsilon (X \sim \{x\}') \cap N$. Clearly $z \neq x$. Hence N contains points of A other than x i.e., $x \varepsilon A'$. Thus A' is closed.

3.9.3. THEOREM. *A topological space* (X,J) *is a* T_D*-space if and only if for every* $x,y\varepsilon X$, $x\neq y$, *there exists a closed set* A *such that* $x\varepsilon A$ *and* $(A\sim\{x\})\cup\{y\}$ *is closed or there exists a closed set* B *such that* $y\varepsilon B$ *and* $(B\sim\{y\})\cup\{x\}$ *is closed.*

Proof. Suppose (X,J) is a T_D-space. Let $x,y\varepsilon X$, and consider $\overline{\{x\}}$ and $\overline{\{y\}}$. If $x\notin\overline{\{y\}}$ and $y\notin\overline{\{x\}}$ let $A=\overline{\{x\}}\cup\overline{\{y\}}$. If $x\varepsilon\overline{\{y\}}$ let $B=\overline{\{y\}}$. If $y\varepsilon\overline{\{x\}}$ let $A=\overline{\{x\}}$. One can check that in all cases A and B are the required sets.

We now show that the necessary condition in 3.9.3 implies that in 3.9.1. Let $x\varepsilon X$, and $y\varepsilon\overline{\{x\}}$, $y\neq x$. We observe that there does not exist a B such that $y\varepsilon B$ and $(B\sim\{y\})\cup\{x\}$ is closed. Otherwise, since $y\varepsilon\overline{\{x\}}$ implies $\overline{\{y\}}\subset\overline{\{x\}}$, we have $\overline{\{y\}}\subset\overline{\{x\}}\subset(B\sim\{y\})\cup\{x\}$. Now let $C=A$ and $G=X\sim\left[(A\sim\{x\})\cup\{y\}\right]$. Then C and G are the required sets.

3.10. CHARACTERIZATION OF T_F-SPACES.

3.10.1. THEOREM. *A topological space* (X,J) *is a* T_F*-space if and only if for every* $x\varepsilon X$ *and every set* F *consisting of at most two points then either* $\{x\}\vdash F$ *or* $F\vdash\{x\}$.

3.10.2. THEOREM. *A topological space* (X,J) *is a* T_F*-space if and only if for every* $x\varepsilon X$, *if* $y\varepsilon\{x\}'$ *then* $\{y\}'=\emptyset$.

3.10.3. THEOREM. *A topological space* (X,J) *is a* T_F*-space if and only if* $N_S(X)\cup N_D(X)=X$.

3.10.4. THEOREM. *A topological space* (X,J) *is a* T_F*-space if and only if for all* $x,y\varepsilon X$, $\widehat{\{x\}}\cap\widehat{\{y\}}$ *is degenerate or* $\overline{\{x\}}\cap\overline{\{y\}}$ *is degenerate.*

3.10.5. THEOREM. *A topological space* (X,J) *is a* T_F*-space if and only if for every* $x\varepsilon X$, *if* $y\varepsilon\widehat{\{x\}}$ *then* $\widehat{\{y\}}=\emptyset$.

3.10.6. THEOREM. <u>A topological space</u> (X,J) <u>is a</u> T_F-<u>space if and only if for all</u> $x,y\in X$, $x\neq y$, $\{x\}'\cap\widehat{\{y\}} = \emptyset$.

<u>Proof.</u> We now show that the necessary condition stated in 3.10.1 implies that in 3.10.2. Let $x\in X$ and $y\in \{x\}'$. If $\{x\}'$ contains only one element then clearly $\{y\}' = \emptyset$. If $y,z\in \{x\}$ let $F = \{x,z\}$. Then $\{y\}\not\vdash F$ and by hypothesis $F\vdash\{y\}$. Hence there exists a closed set $C_{y,z}$ which contains y but not x and z . Therefore $\{y\} = \{x\}'\cap\bigcap\{C_{y,z} : z\in \{x\}' ,z\neq y\} \supset \overline{\{y\}}$. Hence $\{y\}' = \emptyset$.

We now show the necessary condition in 3.10.2 implies (X,J) is a T_F-space. Let $x\notin F$, F any finite set. Let $F = \{y_1,\ldots,y_k\}\cup\{z_1,\ldots,z_m\}$ where $y_1,\ldots,y_k$ are in the closure of x and $z_1, \ldots, z_m$ in $X\sim\overline{\{x\}}$. By hypothesis, unless $\{y_1,\ldots,y_k\} = \emptyset$, x cannot be in closure of each z_i . Then $(\bigcup_{j=1}^{k} X\sim\overline{\{y_j\}})\cup(\bigcup_{i=1}^{m} X\sim\overline{\{z_i\}})$ is an open set of x disjoint from F. Hence $\{x\}\vdash F$.

If (X,J) is a T_F-space then clearly the necessary condition in 3.10.1 is true.

We will show the necessary condition in 3.10.2 is equivalent to that in 3.10.3.

The necessary condition in 3.10.2 states that if x has a non-empty derived set it is not in the derived set of another point, which, in view of 3.4, is equivalent to say that its shell is empty. But the above statement is equivalent to $N_S(X)\cup N_D(X) = X$.

We now will show the necessary condition in 3.10.2 is equivalent to that in 3.10.5.

If $y\in\widehat{\{x\}}$ then $x\in \{y\}'$. If $\widehat{\{y\}} \neq \emptyset$ then y is in the derived set of some point. Hence $\{y\}' = \emptyset$, which is a contradiction. Hence $y\in\widehat{\{x\}}$ implies $\widehat{\{y\}} = \emptyset$. Interchange the role of shell and derived set in the above argument we see that $y\in \{x\}'$ implies $\{y\}' = \emptyset$.

3.10.4 is clearly another statement of 3.10.3.

We now show that the necessary condition in 3.10.2 is equivalent to that in 3.10.6.

Suppose $z \in \{x\}'$ implies $\{z\}' = \emptyset$. Then z cannot be in shell of another point i.e., $\{x\}' \cap \widehat{\{y\}} = \emptyset$.

Suppose $\{x\}' \cap \widehat{\{y\}} = \emptyset$ for all $x \neq y$. Let $y \in \{x\}'$. If $\{y\}' \neq \emptyset$, let $z \in \{y\}'$. Then $y \in \widehat{\{z\}}$ and $\{x\}' \cap \widehat{\{z\}} \neq \emptyset$, which is a contradiction.

3.11. CHARACTERIZATION OF T_γ-SPACES.

3.11.1. THEOREM. <u>A topological space</u> (X,J) <u>is a</u> T_γ-<u>space if and only if</u> (X,J) <u>is a</u> T_F-<u>space and for all</u> $x,y \in X$, $x \neq y$, $\{x\}' \cap \{y\}'$ <u>is degenerate</u>.

<u>Proof</u>. If $y \in \{x\}'$ in a T_γ-space then $\overline{\{x\}} \cap \overline{\{y\}} = \overline{\{y\}} = \{y\}$. Hence $\{y\}' = \emptyset$. Clearly $\{x\}' \cap \{y\}'$ is degenerated.

Let $x,y \in X$. If $\{x\}' \cap \{y\}' = \emptyset$ then $\overline{\{x\}} \cap \overline{\{y\}}$ is degenerate, since x,y cannot both be in $\overline{\{x\}}$ and $\overline{\{y\}}$ in a T_F-space. If $\{x\}' \cap \{y\}' = \{z\}$ then $z \neq x,y$ in a T_F-space. Hence $\overline{\{x\}} \cap \overline{\{y\}} = \{z\}$.

Using a similar argument employed in 3.11.1 we obtain

3.11.2. THEOREM. <u>A topological space</u> (X,J) <u>is a</u> T_γ-<u>space if and only if</u> (X,J) <u>is a</u> T_F-<u>space and for all</u> $x,y \in X, x \neq y$, $\widehat{\{x\}} \cap \widehat{\{y\}}$ <u>is degenerate</u>.

3.11.3. THEOREM. <u>A topological space</u> (X,J) <u>is a</u> T_γ-<u>space if and only if for all</u> $x,y \in X$, $x \neq y$, $\widehat{\{x\}} \cap \widehat{\{y\}}$ <u>is degenerate</u>.

<u>Proof</u>. $z,w \in \widehat{\{x\}} \cap \widehat{\{y\}}$ implies $x,y \in \overline{\{z\}} \cap \overline{\{w\}}$ which is a contradiction in a T_γ-space.

Turning the argument around we see that $\widehat{\{x\}} \cap \widehat{\{y\}}$ is degenerate implies (X,J) is a T_γ-space.

3.12. CHARACTERIZATION OF T_{YS}-SPACES.

The next three theorems are proved as follows: The equivalence of 3.12.1 is easily established by an argument similar to that employed in 3.11.1. That a T_{YS}-space implies the necessary condition in 3.12.3 is easy to see if we observe that either one of the points has an empty derived set or $\overline{\{x\}} \cap \overline{\{y\}} = \emptyset$. Since the necessary condition in 3.12.2 follows easily from that in 3.12.3, the theorems are established if we show that the necessary condition in 3.12.2 implies (X,J) is a T_{YS}-space. If $\{x\}'$ is closed then $\overline{\{x\}'} \cap \{y\}' = \emptyset$ and hence $\{x\}' \cap \overline{\{y\}} = \emptyset$ or $\{y\}$. If $\{x\}' \cap \overline{\{y\}} = \{y\}$ then $\{y\}$ is closed and $\overline{\{x\}} \cap \overline{\{y\}} = \{y\}$. If $\{x\}' \cap \overline{\{y\}} = \emptyset$ then $\overline{\{x\}} \cap \overline{\{y\}} = \emptyset$ or $\{x\}$. If $\{x\}'$ is not closed then $\overline{\{x\}'} = \overline{\{x\}}$ so that $\overline{\{x\}} \cap \{y\}' = \emptyset$. Hence $\overline{\{x\}} \cap \overline{\{y\}} = \emptyset$ or $\{y\}$. Therefore (X,J) is a T_{YS}-space.

3.12.1. THEOREM. <u>A topological space</u> (X,J) <u>is a</u> T_{YS}-<u>space if and only if</u> (X,J) <u>is a</u> T_Y-<u>space and for all</u> $x,y \in X$, $x \neq y$, $\{x\}' \cap \{y\}' = \emptyset$.

3.12.2. THEOREM. <u>A topological space</u> (X,J) <u>is a</u> T_{YS}-<u>space if and only if the derived set of any two distinct points</u> x,y <u>are separated</u> i.e., $(\overline{\{x\}'} \cap \{y\}') \cup (\{x\}' \cap \overline{\{y\}'}) = \emptyset$.

3.12.3. THEOREM. <u>A topological space</u> (X,J) <u>is a</u> T_{YS}-<u>space if and only if the closure of the derived sets of any two distinct points</u> x,y <u>are disjoint</u> i.e., $\overline{\{x\}'} \cap \overline{\{y\}'} = \emptyset$.

3.13. CHARACTERIZATION OF T_{FF}-SPACES.

3.13.1. THEOREM. <u>A topological space</u> (X,J) <u>is a</u> T_{FF}-<u>space if and only if given any two disjoint sets</u> F_1 <u>and</u> F_2 <u>in</u> X, <u>both</u> F_1 <u>and</u> F_2 <u>containing at most two points, then either</u> $F_1 \not\vdash F_2$ <u>or</u> $F_2 \vdash F_1$.

3.13.2. THEOREM. <u>A topological space</u> (X,J) <u>is a</u> T_{FF}-<u>space if and only if either</u> $\{x\}' = \emptyset$ <u>for all but at most one</u> $x \varepsilon X$ <u>or</u> $\widehat{\{x\}} = \emptyset$ <u>for all but at most</u> one $x \varepsilon X$.

3.13.3. THEOREM. <u>A topological space</u> (X,J) <u>is a</u> T_{FF}-<u>space if and only if either</u> $N_S(X) = X \sim \{a\}$ <u>or</u> $N_D(X) = X \sim \{b\}$ for $a, b \varepsilon X$.

We now prove 3.13.1 - 3.13.3 in the following proof.

<u>Proof</u>. First we note clearly if (X,J) is a T_{FF}-space implies the necessary condition stated in 3.13.1.

We now show the necessary conditon in 3.13.1 implies that in 3.13.2. In view of 3.10.1, (X,J) is a T_F-space. If there exists $z,w \varepsilon X$, $z \neq w$, such that $\{z\}' \neq \emptyset$ and $\{w\}' \neq \emptyset$, then unless $\{z\}' = \{w\}' = \{t\}$ for some $t \varepsilon X$, we can find $x,y \varepsilon X$, $x \neq y$ such that $x \varepsilon \{z\}'$ and $y \varepsilon \{w\}'$. Now $z \notin \{w\}$ and $w \notin \{z\}$ in a T_F-space. Let $F_1 = \{z,y\}$ and $F_2 = \{w,x\}$. Then $F_1 \not\vdash F_2$ and $F_2 \not\vdash F_1$ which is a contradiction. Hence $\{z\}' = \{w\}' = \{t\}$.

If $\{z\}' = \{w\}' = \{t\}$ then we claim that $\widehat{\{x\}} = \emptyset$ for all but at most one $x \varepsilon X$. For, if not, let $x,y \varepsilon X$, $x \neq y$, such that $\widehat{\{x\}} \neq \emptyset$ and $\widehat{\{y\}} \neq \emptyset$. By an argument similar to the one used above, unless $\widehat{\{x\}} = \widehat{\{y\}} = \{s\}$, $\{x\} \neq \emptyset$ and $\{y\} \neq \emptyset$ cannot hold. Suppose then that $\widehat{\{x\}} = \widehat{\{y\}} = \{s\}$. If $z = s$ and $x = t$, letting $F_1 = \{z,t\}$ and $F_2 = \{w,y\}$, we have $F_1 \not\vdash F_2$ and $F_2 \not\vdash F_1$. If $z \neq s$ and $x \neq t$, letting $F_1 = \{z,w\}$ and $F_2 = \{s,t\}$, we have again $F_1 \not\vdash F_2$ and $F_2 \not\vdash F_1$. Hence $\widehat{\{x\}} = \emptyset$ for all but most one x or else $\{x\}' = \emptyset$ for all but at most one x.

3.13.2 and 3.13.3 are clearly equivalent.

We now show the sufficiency of 3.13.3.

Let F_1 and F_2 be any two disjoint finite sets. Suppose $N_S(X) = X \sim \{a\}$. If $a \notin F_1$ and $a \notin F_2$ then F_1 and F_2 are finite union of open sets and hence both open. Suppose without loss of generality $a \varepsilon F_1$. Then F_2 is open and $F_2 \not\vdash F_1$.

If $N_D(X)=X\sim\{b\}$ then one repeats the above argument, and replace the word open by closed.

3.14. CHARACTERIZATION OF T_1-SPACES.

In the next set of theorems the equivalence in 3.14.1 is immediate from the definition. With the exception of 3.14.10 the necessary conditions stated in 3.14.2 to 3.14.9 are easily seen to be equivalent to that in 3.14.1.

3.14.1. THEOREM. <u>A topological space</u> (X,J) <u>is a</u> T_1-<u>space if and only if for every</u> $x,y\varepsilon X$, $x\neq y$, $\{x\}\not\vdash\{y\}$.

3.14.2. THEOREM. <u>A topological space</u> (X,J) <u>is a</u> T_1-<u>space if and only if for every</u> $x\varepsilon X$, $\overline{\{x\}} = \{x\}$ i.e., <u>singletons are closed.</u>

3.14.3. THEOREM. <u>A topological space</u> (X,J) <u>is a</u> T_1-<u>space if and only if for every</u> $x\varepsilon X$, $\{x\}' = \emptyset$.

3.14.4. THEOREM. <u>A topolgical space</u> (X,J) <u>is a</u> T_1-<u>space if and only if for every</u> $x\varepsilon X$, $\widehat{\{x\}} = \{x\}$.

3.14.5. THEOREM. <u>A topological space</u> (X,J) <u>is a</u> T_1-<u>space if and only if for every</u> $x\varepsilon X$, $\widehat{\{x\}} = \emptyset$.

3.14.6. THEOREM. <u>A topological space</u> (X,J) <u>is a</u> T_1-<u>space if and only if for every</u> $x,y\varepsilon X$, $x\neq y$, $\overline{\{x\}}\cap\overline{\{y\}} = \emptyset$.

3.14.7. THEOREM. <u>A topological space</u> (X,J) <u>is a</u> T_1-<u>space if and only if for every</u> $x,y\varepsilon X$, $x\neq y$, $\widehat{\{x\}}\cap\widehat{\{y\}} = \emptyset$.

3.14.8. THEOREM. <u>A topological space</u> (X,J) <u>is a</u> T_1-<u>space if and only if</u> $N_D(X)=X$.

3.14.9. THEOREM. <u>A topological space</u> (X,J) <u>is a</u> T_1-<u>space if and only if</u> $N_S(X)=X$.

3.14.10. THEOREM. <u>A topological space</u> (X,J) <u>is a</u> T_1-<u>space if and only if for every</u> $x,y\varepsilon X$, $x\neq y$, <u>there exists closed sets</u> A,B <u>such that</u> $x\varepsilon A$, $y\varepsilon B$ <u>and</u> $(A\sim\{x\})\cup\{y\}$ <u>and</u> $(B\sim\{y\})\cup\{x\}$ <u>are closed</u>.

<u>Proof</u>. We shall show the necessary condition stated here is equivalent to that in 3.14.3.

Suppose for every x, $\{x\}' = \emptyset$. Let $x,y\varepsilon X, x\neq y$. Then $\overline{\{x\}}\cap\overline{\{y\}} = \emptyset$. Let $A = \overline{\{x\}}\cup\overline{\{y\}} = B$. Clearly A and B are the required sets.

Suppose there exists A and B as stated above. Let $x\varepsilon X$. If $\{x\}'\neq\emptyset$ let $y\varepsilon\{x\}'$. Then $\overline{\{y\}}\subset\overline{\{x\}}$, and there exists closed B such that $y\varepsilon B$ and $(B\sim\{y\})\cup\{x\}$ is closed. Hence we have $\overline{\{y\}}\subset\overline{\{x\}}\subset(B\sim\{y\})\cup\{x\}$, which is impossible. Hence $\{x\}' = \emptyset$.

3.15. CHARACTERIZATION OF HAUSDORFF SPACES.

It is a well known fact that sequences have a unique limit in Hausdorff spaces. However, there are topological spaces where sequences have a unique limit but the topological space is not a Hausdorff space. But for nets, filters, and runs, the uniqueness of the limit point actually characterizes Hausdorff spaces, as shown in 3.15.2 [7], 3.15.3 [10] and 3.15.4 [8].

3.15.1. THEOREM. [4] <u>A topological space</u> (X,J) <u>is a Hausdorff space if and only if for each point</u> x <u>the intersection of all closed neighborhood of</u> x <u>is the set</u> $\{x\}$.

<u>Proof</u>. Suppose (X,J) is a Hausdorff space. If x and y are any two distinct points then there exists two disjoint open sets G_1, G_2 such that $x\varepsilon G_1$ and $y\varepsilon G_2$. Then $X\sim G_2$ is a closed neighborhood of x that does not contain y.

Suppose the intersection of all closed neighborhood of x is $\{x\}$. Let $x,y \in X$, $x \neq y$. Then there exists closed neighborhood F_1 such that $y \notin F_1$. Then $G_2 = X \sim F_1$ is an open set containing y. Since F_1 is a neighborhood we can find open G_1 such that $x \in G_1 \subset F_1$. Clearly $G_1 \cap G_2 = \emptyset$.

3.15.2. THEOREM. <u>A topological space</u> (X,J) <u>is a Hausdorff space if and only if for every net</u> S <u>in</u> (X,J), <u>if</u> S <u>converges to both</u> s <u>and</u> t <u>then</u> $s = t$.

<u>Proof</u>. The necessity is clear.

If (X,J) is not a Hausdorff space let s and t be any two distinct points of X such that every neighborhood of s intersect every neighborhood of t. Let $\mathcal{N}(s)$ and $\mathcal{N}(t)$ be the family of neighborhoods of s and t respectively. Thus $\mathcal{N}(s)$ and $\mathcal{N}(t)$ are directed by set inclusion $\subset$. Consider the cartesian product of $\mathcal{N}(s)$ and $\mathcal{N}(t)$, and order it by agreeing $(T,U) \geq (V,W)$ if and only if $T \subset V$ and $U \subset W$. Then clearly $\geq$ directs $\mathcal{N}(s) \times \mathcal{N}(t)$. Since for each (T,U) in $\mathcal{N}(s) \times \mathcal{N}(t)$ we have $T \cap U \neq \emptyset$, we can choose a point $S_{(T,U)}$ from $T \cap U$. If $(V,W) \geq (T,U)$ then $S_{(V,W)} \in V \cap W \subset T \cap U$. Hence $\{S_{(T,U)} : (T,U) \in \mathcal{N}(s) \times \mathcal{N}(t), \geq\}$ is a net that converges to both s and t.

3.15.3. THEOREM. <u>A topological space</u> (X,J) <u>is a Hausdorff space if and only if for every filter</u> $\mathcal{F}$ <u>in</u> (X,J) <u>if</u> $\mathcal{F}$ <u>converges to both</u> s <u>and</u> t <u>then</u> $s = t$.

<u>Proof</u>. The necessity is clear.

If (X,J) is not a Hausdorff space let s and t be any two distinct points such that every neighborhood of s intersects every neighborhood of t. Consider the family $\mathcal{F} = \{A : A = N_s \cap N_t$ for every $N_s \in \mathcal{N}(s)$ and $N_t \in \mathcal{N}(t)\}$. Then $\mathcal{F}$ is clearly a filter and is a refinement of both filters $\mathcal{N}(s)$ and $\mathcal{N}(t)$. Since $\mathcal{N}(s)$ and $\mathcal{N}(t)$ are filters that converges to s and t respectively, $\mathcal{F}$ converges to both s and t, which contradicts the condition of the theorem.

3.15.4. THEOREM. <u>A topological space</u> (X,J) <u>is a Hausdorff space if and only if for every run</u> R <u>in</u> (X,J) <u>if</u> R <u>converges to both</u> s <u>and</u> t <u>then</u> $s = t$.

<u>Proof.</u> The necessity is clear.

To prove the sufficiency if (X,J) is not a Hausdorff space let s and t be any two distinct points such that $N_s \cap N_t \neq \emptyset$ for $N_s \varepsilon \mathcal{N}(s)$ and $N_t \varepsilon \mathcal{N}(t)$. Let $\mathcal{F} = \{A : A = N_s \cap N_t$ for $N_s \varepsilon \mathcal{N}(s)$ and $N_t \varepsilon \mathcal{N}(t)\}$. Consider $R = \{(A,z) : z \varepsilon A \varepsilon \mathcal{F}\}$. Then clearly R is a non-void relation. For every $A_1, A_2 \varepsilon$ domain R let $A_3 = A_1 \cap A_2$. Then if $(A_3,t) \varepsilon R$ it follows that $(A_1,t) \varepsilon R$ and $(A_2,t) \varepsilon R$, since $t \varepsilon A_1 \cap A_2$. Hence R is a run. If U is any neighborhood of s then for some $A \varepsilon$ domain R, $A = U \cap N_t$ for some $N_t \varepsilon \mathcal{N}(t)$. Clearly $vsRA \subset U$. Hence R is eventually in U. Therefore R converges to s. Similarly R converges to t, which contradicts the condition of the theorem.

3.16. CHARACTERIZATION OF REGULAR SPACES.

3.16.1 is a well known result. We prove 3.16.2 - 3.16.4 by showing the necessary condition in 3.16.2 implies that in 3.16.3, which in turn implies that in 3.16.4. Finally, the proof is completed by showing the necessary condition in 3.16.4 implies that (X,J) is a regular space.

3.16.1. THEOREM. <u>A topological space</u> (X,J) <u>is a regular space if and only if for every point</u> $x \varepsilon X$ <u>and every open set</u> G <u>containing</u> x <u>there exists an open set</u> H <u>such that</u> $x \varepsilon H \subset \overline{H} \subset G$.

3.16.2. THEOREM. [4] <u>A topological space</u> (X,J) <u>is a regular space if and only if for every closed set</u> A <u>the intersection of all closed neighborhoods of</u> A <u>is</u> A.

3.16.3. THEOREM. [4] <u>A topological space</u> (X,J) <u>is a regular space if and only if for every</u> A <u>and open</u> B <u>satisfying</u> $A \cap B \neq \emptyset$ <u>there exists an open set</u> G <u>such that</u> $A \cap G \neq \emptyset$ <u>and</u> $\overline{G} \subset B$.

3.16.4. THEOREM. [4] <u>A topological space</u> (X,J) <u>is a regular space if and only if for every</u> $A \neq \emptyset$ <u>and closed</u> B <u>satisfying</u> $A \cap B = \emptyset$ <u>there exists disjoint open sets</u> G_1, G_2 <u>such that</u> $A \cap G_1 \neq \emptyset$ <u>and</u> $B \subset G_2$.

<u>Proof</u>. Suppose the necessary condition stated in 3.16.1 holds. Let A be closed and $x \notin A$. Then there exists an open set G such that $x \in G \subset \overline{G} \subset X \sim A$. Since $X \sim G$ is a closed neighborhood of A that doesn't contain x, the intersection of all closed neighborhood of A is A.

We now prove the necessary condition in 3.16.2 implies that in 3.16.3. Suppose $A \cap B \neq \emptyset$ and B open. Then $X \sim B$ is closed and there is an $x \in A \cap B$ such that $x \notin X \sim B$. Let F be a closed neighborhood of $X \sim B$ such that $x \notin F$. Since F is a neighborhood there is an open set G_1 such that $X \sim B \subset G_1 \subset F$. Then $X \sim F = G$ is open and $G \subset X \sim G_1 = \overline{X \sim G_1} \subset B$. Hence $\overline{G} \subset \overline{X \sim G_1} \subset B$. Clearly $A \cap G \neq \emptyset$.

We now prove the necessary condition in 3.16.3 implies that in 3.16.4. Suppose $A \neq \emptyset$ and B closed such that $A \cap B = \emptyset$. Then $X \sim B$ is open and $A \cap (X \sim B) \neq \emptyset$. Hence there exists an open set G_1 such that $G_1 \cap A \neq \emptyset$ and $\overline{G}_1 \subset X \sim B$. Let $G_2 = X \sim \overline{G}_1$. Then G_2 is open and $B \subset G_2$. Clearly $G_1 \cap G_2 = \emptyset$.

To prove the necessary condition in 3.16.4 implies that (X,J) is a regular space, we take $A = \{x\}$.

3.17. CHARACTERIZATION OF T_3-SPACES.

3.17.1. THEOREM. [10] <u>A topological space</u> (X,J) <u>is a</u> T_3-<u>space if and only if</u> (X,J) <u>is a regular</u>, T_0-<u>space</u>.

<u>Proof</u>. The necessity is clear.

To prove the sufficiency, it suffices to show that (X,J) is a T_1-space. Let $x, y \in X$, $x \neq y$. Then, without loss of generality, there exists an open set A such that $x \in A$ and $y \notin A$. Since (X,J) is regular there exists an open set H such that $x \in H \subset \overline{H} \subset A$. Then $X \sim \overline{H}$ is open set such that $y \in X \sim \overline{H}$, and $x \notin X \sim \overline{H}$.

3.18. CHARACTERIZATION OF COMPLETELY REGULAR SPACES.

The next theorem 3.18.1 shows that only completely regular spaces have enough functions to allow us to obtain a uniformity for the space. For a detailed proof of the theorem see [10].

3.18.1. THEOREM. A topological space (X,J) is a completely regular space if and only if the topology J for X is the uniform topology for some uniformity for X.

3.19. CHARACTERIZATION OF TYCHONOFF SPACES.

In the next set of theorems we prove 3.19.1 and 3.19.7. In order to prove 3.19.7 we need the well known results 3.19.2 - 3.19.6 which we state without proof.

3.19.1. THEOREM. A topological space (X,J) is a Tychonoff space if and only if (X,J) is a completely regular T_0-space.

Proof. The necessity is clear.

To prove sufficiency it suffices to show that given any two distinct points x,y then there exists a continuous function f on X to $[0,1]$ such that $f(x)=0$ and $f(y)=1$. Let $x,y \in X$, $x \neq y$. Then, without loss of generality, there exists an open set A such that $x \in A$ and $y \notin A$. And since $x \notin X \sim A$, which is closed, there exists a continuous function on X to $[0,1]$ such that $f(x)=0$ and $f[X \sim A] = \{1\}$. Since $y \in X \sim A$, $f(y) = 1$.

3.19.2. THEOREM. The product space $(\bigtimes_{i \in A} X_i, J)$, A any index set, is compact if and only if each X_i is compact.

3.19.3. THEOREM. The product space, $(\bigtimes_{i \in A} X_i, J)$, A any index set, is a Hausdorff space if and only if for each $i \in A$, X_i is a Hausdorff space.

3.19.4. THEOREM. <u>A function f on a topological space to a product space</u> $(\bigtimes_{i\varepsilon A} X_i, J)$ <u>is continuous if and only if the composition</u> $\pi_i \circ f$ <u>is continuous for each</u> π_i, <u>where</u> π_i <u>is the projection map from</u> $\bigtimes_{i\varepsilon A} X_i$ <u>to</u> X_i.

3.19.5. THEOREM. <u>If</u> (X,J) <u>is a compact Hausdorff space then it is a normal space.</u>

3.19.6. THEOREM. <u>A subspace of a Tychonoff space is a Tychonoff space.</u>

3.19.7. THEOREM. <u>A topological space</u> (X,J) <u>is a Tychonoff space if and only if</u> (X,J) <u>is homeomorphic to a subset of a compact Hausdorff space.</u>

<u>Proof.</u> We prove the sufficiency. Since each compact Hausdorff space is normal, by Urysohn's lemma (see 3.20.5) it is also a Tychonoff space.

If (X,J) is a Tychonoff space, let F be the collection of all real-valued, bounded continuous functions defined on X. Since each $f\varepsilon F$ is bounded we may assume the range of each f to be I_f, where I_f is the closed unit interval. Since each I_f is a compact Hausdorff space we see that the product space $\bigtimes_{f\varepsilon F} I_f$ is again a compact Hausdorff space. Define the mapping $h : X \to \bigtimes_{f\varepsilon F} I_f$ by setting $h(x)_f = f(x)$ i.e. the f-th coordinate of $h(x)$ is $f(x)$ for each $x\varepsilon X$. Denote the range of h by $\tilde{X}$ and the closure of $\tilde{X}$ by βX. Since βX is a closed subset of a compact Hausdorff space, βX is a compact Hausdorff space. Clearly $\tilde{X}$ is dense in βX.

We now show h is a homeomorphism. That h is continuous follows from 3.19.4 and the fact that $\pi_f \circ h = f$. Since (X,J) is a Tychonoff space, for every $x,y\varepsilon X$, $x\neq y$, there exists an f such that $f(x) = 0 \neq f(y) = 1$ so that $h(x) \neq h(y)$. Thus h is 1-1. That h is onto is clear. To show h^{-1} is continuous, let G be any open set of X. We shall show $h[G]$ to be open in $\tilde{X}$. Let $x\varepsilon G$. Then there is an f such that $f(x)=0$ and $f[X\sim G] = \{1\}$. Since $\pi_f^{-1}[[0,1)]$ is open in $\bigtimes_{f\varepsilon F} I_f$, $\tilde{X}\cap\pi_f^{-1}[[0,1)]$ is open in $\tilde{X}$, and clearly contains $h(x)$.

If $(x_1, x_2, \ldots, x_i, \ldots) \in \widetilde{X} \cap \pi_f^{-1}[[0,1)]$ then $h^{-1}((x_1, x_2, \ldots, x_i, \ldots))$ is in G so that $(x_1, x_2, \ldots, x_i, \ldots) \in h[G]$. Hence $\widetilde{X} \cap \pi_f^{-1}[[0,1)] \subset h[G]$. Therefore $h[G]$ is open in $\widetilde{X}$ and h is a homeomorphism.

3.20. CHARACTERIZATION OF NORMAL SPACES.

In the next set of theorems 3.20.1, 3.20.5 and 3.20.6 are well known results. We shall only prove 3.20.2, 3.20.3 and 3.20.4 [4].

3.20.1. THEOREM. <u>A topological space</u> (X,J) <u>is a normal space if and only if for any closed set</u> F <u>and an open set</u> G <u>containing</u> F, <u>there exists an open set</u> K <u>such that</u> $F \subset K \subset \overline{K} \subset G$.

We can restate the result of 3.20.1 as follows: A topological space (X,J) is a normal space if and only if given any closed set F and an open covering of F consisting of a single set G there exists another open covering of F consisting of a single set K such that $K \subset \overline{K} \subset G$. The question arises whether we can extend the result to coverings consisting of more than one open set. 3.20.2 shows that for finite cover we can do so, but, for infinite coverings we require the covering to be point-finite as shown in 3.20.3.

3.20.2. THEOREM. <u>Let</u> (X,J) <u>be a normal space. If</u> F <u>is a closed subset and</u> $\{G_1, G_2, \ldots, G_n\}$ <u>an open covering of</u> F, <u>then there is another open covering</u> $\{K_1, \ldots, K_n\}$ <u>of</u> F <u>such that</u> $\overline{K}_i \subset G_i$ <u>for each</u> $i = 1, \ldots, n$.

<u>Proof.</u> We first prove the result for F = X. Let $\{G_1, \ldots, G_n\}$ be an open covering of X. Let $A_1 = X \sim (G_2 \cup \ldots \cup G_n)$. Then $A_1 \subset G_1$. By 3.20.1 there is an open set K_1 such that $A_1 \subset K_1 \subset \overline{K}_1 \subset G_1$. Then $\{K_1, G_2, \ldots, G_n\}$ is an open covering of X, since $\{A, G_2, \ldots, G_n\}$ covers X. Applying this procedure n times we obtain an open covering $\{K_1, \ldots, K_n\}$ such that $\overline{K}_i \subset G_i$ for $i = 1, 2, \ldots, n$.

The result is immediate now if we observe that for any open covering $\{G_1,\ldots,G_n\}$ of the closed set F, then $\{X\sim F, G_1,\ldots,G_n\}$ is an open covering of X.

3.20.3. THEOREM. <u>Let</u> (X,J) <u>be a normal space. If</u> F <u>is a closed subset and</u> $\{G_i : i\varepsilon I\}$ <u>is any point-finite open covering of</u> F, <u>then there is another open covering</u> $\{K_i : i\varepsilon I\}$ <u>of</u> F <u>such that</u> $\overline{K}_i \subset G_i$ <u>for</u> $i\varepsilon I$.

<u>Proof</u>. We first prove the result for F = X. Let $\{G_i : i\varepsilon I\}$ be any point-finite open covering of X. Let $\mathfrak{A}$ be the family of all open coverings $\{K_i : i\varepsilon I\}$ of X such that $\overline{K}_i \subset G_i$ or $K_i = G_i$ for every $i\varepsilon I$. Let $\mathcal{T}$ be the set of all these indices $i\varepsilon I$ for which $\overline{K}_i \subset G_i$. We now order $\mathfrak{A}$ by letting $\{K_i^1\} \leq \{K_i^2\}$ if $K_i^1 = K_i^2$ for every $i\varepsilon\mathcal{T}^1$.

Let $\{\{K_i^s\} : s\varepsilon S\}$ be a linearly ordered family of open coverings $\{K_i^s\}\varepsilon\mathfrak{A}$ Let $\mathcal{T} = \bigcup\mathcal{T}^s$ and for every $i\varepsilon\mathcal{T}$ let $K_i = K_i^s$, where s is arbitrarily choosen so that $i\varepsilon\mathcal{T}^s$. Since $\{\{K_i^s\} : s\varepsilon S\}$ is linearly ordered K_i is independent of s. For every $i\notin\mathcal{T}$ let $K_i = G_i$. Then $\{K_i\}$ is an open covering of X. For, let $x\varepsilon X$. Then there exists a finite number of indices $i_1, i_2, \ldots, i_n$ such that $x\varepsilon G_{i_\nu}$, $\nu = 1, 2, \ldots, n$. Since ν is finite and $\{\mathcal{T}^s\}$ is a linearly ordered family there is an $s\varepsilon S$ such that if $i_\nu\varepsilon\mathcal{T}$ then $i_\nu\varepsilon\mathcal{T}^s$. The family $\{K_i^s\}$ is a covering of X so $x\varepsilon K_i^s$ for some $i\varepsilon I$, where $i=i_\nu$ for some ν. Thus if $i\varepsilon\mathcal{T}$ then $i\varepsilon\mathcal{T}^s$ and so $K_i = K_i^s$ and $x\varepsilon K_i$. If $i\notin\mathcal{T}$ then by definition $K_i = G_i$ and so $x\varepsilon K_i^s \subset G_i \subset K_i$. Hence in any case x is covered by $\{K_i\}$. According to the definition of $\leq$ we have $\{K_i^s\} \leq \{K_i\}$ for every $s\varepsilon S$ because for each $i\varepsilon\mathcal{T}^s$ we have $K_i^s = K_i$. Hence the hypothesis of Zorn's lemma is satisfied, and there exists an open covering $\{K_i\}\ \varepsilon\mathfrak{A}$ which is maximal with respect to the given order relation. Now if $\overline{K}_i \subset G_i$ is not true for some $i\varepsilon I$ then $K_i = G_i$. Let $A = X\sim\bigcup\{K_j : j \neq i\}$, which is a closed subset of G_i. By 3.20.1 we can find an open set H_i such that $A \subset H_i \subset \overline{H}_i \subset K_i = G_i$. For $j \neq i$ let $H_j = K_j$. This new family $\{H_i\}$ is an

open covering of X and $\{K_i\} < \{H_i\}$, which contradicts the maximality of $\{K_i\}$.

The theorem is immediate if we observe that if $\{G_i\}$ is any open covering of the closed set F, then $\{X \sim F\} \cup \{G_i\}$ is an open covering of X.

3.20.4. THEOREM. <u>A topological space</u> (X,J) <u>is a normal space if and only if for every ordered n-tuple</u> $(A_1, \ldots, A_n)$ <u>of closed sets in</u> X <u>there exists an ordered n-tuple</u> $(G_1, \ldots, G_n)$ <u>of open sets in</u> X <u>such that</u> $(A_1, \ldots, A_n)$ <u>is similar to</u> $(\bar{G}_1, \ldots, \bar{G}_n)$ <u>and</u> $A_i \subset G_i$ <u>for</u> $i=1,\ldots, n$.

<u>Proof.</u> The sufficiency is clear if we take $n = 2$.

To prove the necessity, let $(A_1, \ldots, A_n)$ be an n-tuple closed sets in X. Let A be the union of all those intersections $A_{i_1} \cap \ldots \cap A_{i_k}$ which do not meet A_1. Then A is closed and $A \cap A_1 = \emptyset$. By 3.20.1 there exists an open set G_1 such that $A_1 \subset G_1 \subset \bar{G}_1 \subset X \sim A$. Then $(\bar{G}_1, A_2, \ldots, A_n)$ is similar to $(A_1, \ldots, A_n)$. If the intersections $A_{i_1} \cap \ldots \cap A_{i_k}$ do not involve A_1 then the corresponding sets are identical. If $A_1 \cap A_{i_1} \cap \ldots \cap A_{i_k} \neq \emptyset$ then, since $A_1 \subset \bar{G}_1$, $G_1 \cap A_{i_1} \cap \ldots \cap A_{i_k} \neq \emptyset$. If $A_1 \cap A_{i_1} \cap \ldots \cap A_{i_k} = \emptyset$ then $A_{i_1} \cap \ldots \cap A_{i_k}$ is in A and hence $\bar{G}_1 \subset X \sim A \subset X \sim (A_{i_1} \cap \ldots \cap A_{i_k})$. Therefore $\bar{G}_1 \cap A_{i_1} \cap \ldots \cap A_{i_k} = \emptyset$. Applying the procedure n times we obtain the desired result.

3.20.5. THEOREM. <u>A topological space</u> (X,J) <u>is a normal space if and only if for every two disjoint closed subsets</u> F_1 <u>and</u> F_2 <u>of</u> X <u>there exists a continuous function</u> $f : X \to [a,b]$ <u>such that</u> $f[F_1] = \{a\}$ <u>and</u> $f[F_2] = \{b\}$.

3.20.6. THEOREM. <u>A topological space</u> (X,J) <u>is a normal space if and only if every real-valued function defined and continuous on a closed subset of</u> X <u>into</u> $[a,b]$ <u>has a continuous extension to the entire space</u> X <u>into</u> $[a,b]$.

3.21. CHARACTERIZATION OF COMPLETELY NORMAL SPACES.

3.21.1 is a well known result. The metrizability of a topological space implies the conditions stated in 3.21.4 while the conditions in 3.21.4 imply a topological space is a normal space. 3.21.5 shows that the condition characterizes completely normal spaces, a result due to Iuokuma [6]. 3.21.6 and 3.21.7, due to Suzuki [11], are generalization of 3.21.5.

3.21.1. THEOREM. A topological space (X,J) is a completely normal space if and only if every subspace of (X,J) is a normal space.

3.21.2. THEOREM. 4 A topological space (X,J) is a completely normal space if and only if for $S \subset X$ and $A \subset S$ such that $A \subset S^i$ and $\overline{A} \subset S$ then there exists an open set G such that $A \subset G \subset \overline{G} \subset S$.

Proof. To prove the necessity we note that A and $X \sim S$ are separated because $X \sim (\overline{X \sim S}) = (X \sim S)^e = S^i \supset A$ and $X \sim \overline{A} \supset X \sim S$.

To prove the sufficiency let A and B be separated sets. Let $S = X \sim B$. Then $A \subset X \sim \overline{B} = (X \sim B)^i = S^i$ and $\overline{A} \subset X \sim B = S$. Hence there exists an open set G such that $A \subset G \subset \overline{G} \subset S = X \sim B$. Let $K = X \sim \overline{G}$. Then G and K are the required disjoint open sets containing A and B respectively.

3.21.3. LEMMA. If $\{X\alpha : \alpha \varepsilon T\}$ is a locally finite family then $\overline{\bigcup_{i \varepsilon T} X_i} = \bigcup_{i \varepsilon T} \overline{X}_i$.

Proof. Clearly $\bigcup \overline{X}_i \subset \overline{\bigcup X_i}$. Using local finiteness and set theory one can check that for $x \varepsilon \overline{\bigcup X_i}$, $x \varepsilon \overline{X_{i_1} \cup \ldots \cup X_{i_n}} = X_{i_1} \cup \ldots \cup X_{i_n} \subset \bigcup \overline{X}_i$.

3.21.4. LEMMA. [11] Let X be a set and $\{X\alpha : \alpha \varepsilon T\}$ and $\{F\alpha : \alpha \varepsilon T\}$ be two families of subsets of X. Then the following conditions (I), (II), (III), are equivalent:

$$(\mathrm{I})\begin{cases}(\mathrm{I1}) & X = \bigcup_{\alpha\varepsilon T} F\alpha \\ (\mathrm{II2}) & F_\alpha \cap F_\beta \cap (\bar{X}_\alpha \cup \bar{X}_\beta) = \bar{X}_\alpha \cap \bar{X}_\beta \qquad \alpha,\beta\varepsilon T\end{cases}$$

$$(\mathrm{II})\begin{cases}(\mathrm{I1}) = (\mathrm{II1}) \\ (\mathrm{II1}) \quad F_\alpha \cap \bar{X}_\beta = \bar{X}_\alpha \cap \bar{X}_\beta \qquad \alpha,\beta\varepsilon T\end{cases}$$

$$(\mathrm{III})\begin{cases}(\mathrm{III1}) = (\mathrm{I1}) \\ (\mathrm{III2}) \quad F_\alpha \cap (\bigcup_{\beta\varepsilon T} \bar{X}_\beta) = \bar{X}_\alpha \qquad \alpha\varepsilon T\end{cases}$$

It is a matter of set theory in checking the above result.

3.21.5. THEOREM. <u>A topological space</u> (X,J) <u>is a completely normal space if and only if for any</u> n <u>subsets</u> $X_1, X_2, \ldots, X_n$ <u>of</u> X <u>there exists</u> n <u>closed sets</u> $F_1, F_2, \ldots, F_n$ <u>such that</u> (I), (II), (III) <u>of</u> 3.21.4 <u>holds</u>.

<u>Proof</u>. We note first that it suffices to prove the result for (III) of 3.21.4 and that we may take $X_1, X_2, \ldots, X_n$ to be closed.

To prove the sufficiency let X_1 and X_2 be any two separated sets. Then there exists two closed sets F_1 and F_2 such that $X = F_1 \cup F_2$ and $F_1 \cap F_2 \cap (\bar{X}_1 \quad \bar{X}_2) = \bar{X}_1 \cap \bar{X}_2$. Let $G_1 = X \sim F_2$ and $G_2 = X \sim F_1$. One can easily check that G_1 and G_2 are the required disjoint open sets to separate X_1 and X_2.

The proof of the necessity is by induction on n. If $n = 2$, let $A = X_1 \sim X_2$ and $B = X_2 \sim X_1$. Then A and B are separated sets. Hence there exists two open sets G_1, G_2 such that $A \subset G_1$ and $B \subset G_2$. Let $F_1 = X \sim G_2$ and $F_2 = X \sim G_1$. Then clearly $F_1 \cup F_2 = X$, and $X_1 \subset F_1 \cap (X_1 \cup X_2)$. If $F_1 \cap (X_1 \cup X_2) \subset X_1$ is false then $x \varepsilon F_1$ and $x \varepsilon B$, which implies $x \varepsilon F_1$ and $x \varepsilon G_2$. This contradicts $F_1 = X \sim G_2$. Hence $X_1 = F_1 \cap (X_1 \cup X_2)$. Similarly $X_2 = F_2 \cap (X_1 \cup X_2)$.

Suppose the theorem is true for n. Let $X_1, X_2, \ldots, X_{n+1}$ be n+1 closed subsets of X. Let $X' = X_n \cup X_{n+1}$, which is closed. By hypothesis of induction there exists n closed sets $F_1, F_2, \ldots, F_{n-1}, F$ such that (III) of 3.21.4 is satisfied. Since F is completely normal we have two closed subsets F_n and F_{n+1} of F which satisfies (III) of 3.21.4. Since F is closed, F_n and F_{n+1} are closed in X also. We claim that $F_1, F_2, \ldots, F_n, F_{n+1}$ are the required closed sets. That (III1) holds is clear. To show (III2) we need only show that $F_i \cap (\bigcup_{j=1}^{n+1} \overline{X_j}) = \overline{X_i}$ for i = n, n+1. This follows from the fact that for i = n, n+1,

$$F_i \cap (\bigcup_{j=1}^{n+1} \overline{X_j}) = F_i \cap F \cap (\bigcup_{j=1}^{n+1} \overline{X_j})$$

$$= F_i \cap (X_n \cup X_{n+1})$$

$$= X_i$$

3.21.6. THEOREM. <u>If</u> (X,J) <u>is a completely normal space then for any locally finite family</u> $\{X\alpha : \alpha\varepsilon T\}$ <u>of subsets of</u> X <u>there exists a family</u> $\{F\alpha : \alpha\varepsilon T\}$ <u>of closed subsets satisfying</u> (I), (II), (III) <u>of</u> 2.21.4.

<u>Proof</u>. It is enough to show that it satisfies (III) of 3.21.4 and that we may take $\{X\alpha : \alpha\varepsilon T\}$ to be a family of closed sets.

For the case when T is finite we have already proved it in 3.21.5. Assume T to be the set of all transfinite ordinals $\alpha<\eta$. Let $X\mu' = X_{\mu+1} \cup X_{\mu+2} \cup \ldots$ for $\mu<\eta$, and let $X_*' = \bigcup_{\alpha\varepsilon T} X_\alpha$. By 3.21.3 X_μ' is a closed subset of X.

Let ν be an ordinal such that $\nu < \eta$. Assume for every $\mu\leq\nu$ there exists F_μ, F_μ' of closed subsets of X such that

(1) $$\bigcup_{\gamma\leq\mu} F_\gamma \cup F_\mu' = X$$

(2) $$F_\mu \cap X_*' = X_\mu \qquad F_\mu' \cap X_*' = X_\mu'$$

We now show how we obtain F_ν and F_ν' that satisfy (1) and (2) above. Let

$F_\nu'' = \bigcap_{\mu<\nu} F_\nu'$. Then F_ν'' is closed and contains X_ν and X_ν' . Since (X,J) is a completely normal space, there exists two closed subsets F_ν, F_ν' of F_ν'' and hence closed subsets of X such that $F_\nu'' = F_\nu \cup F_\nu'$ and $F_\nu \cap (X_\nu \cup X_\nu') = X_\nu$

$F_\nu' \cap (X_\nu \cup X_\nu') = X_\nu'$

We now show that it satisfies (1) and (2) of above. Since

$$X \sim F_\nu'' = X \sim \bigcap_{\mu<\nu} F_\mu' = \bigcup_{\mu<\nu} (X \sim F_\mu') \subset \bigcup_{\mu<\nu} F_\mu$$

we have

$$\begin{aligned} \bigcup_{\mu\leq\nu} F_\mu \cup F_\nu' &= \bigcup_{\mu<\nu} F_\mu \cup F_\nu \cup F_\nu' \\ &\supset (X \sim F_\nu'') \cup F_\nu'' \\ &= X \\ &\supset \bigcup_{\mu\leq\nu} F_\mu \cup F_\nu' . \end{aligned}$$

Also

$$\begin{aligned} F_\nu \cap X_*' &= F_\nu \cap F_\nu'' \cap X_*' \\ &= F_\nu \cap \bigcap_{\mu<\nu} F_\mu' \cap X_*' \\ &= F_\nu \left(\bigcap_{\mu<\nu} (F_\mu' \cap X_*') \right) \\ &= F_\nu \cap \left(\bigcap_{\mu<\nu} X_\mu' \right) \\ &= F_\nu \cap (X_\nu \cup X_\nu') \\ &= X_\nu . \end{aligned}$$

Similarly $F_\nu' \cap X_*' = X_\nu'$.

Consider $\{F_\alpha : \alpha\varepsilon T\}$. Then (III2) is satisfied. Let $D = \bigcap_{\alpha\varepsilon T} F_\alpha$. If $D = \emptyset$ then clearly (III1) is satisfied. If $D \neq \emptyset$, then for every $\beta\varepsilon T$, $X_\beta \cap D = \emptyset$. For, suppose otherwise; and let $x\varepsilon X_\beta \cap D$ for some $\beta\varepsilon T$. Since $\{X_\alpha\}$ is locally finite it is point finite and hence let ν be the greatest index such that $x\varepsilon X_\nu$. Then $x \notin X_\mu'$ for $\mu>\nu$. But $x\varepsilon X_\beta \cap D \subset X_\beta \cap F_\mu' \subset X_*' \cap F_\mu'$ for $\mu>\nu$, which is a contradiction. Now let $F_1^* = F_1 \cup D$ and

consider $\{F_1^*, F_2, \ldots, F_\nu, \ldots\}$. This family satisfies(III)since

$$F_1^* \cap X_*' = (F_1 \cup D) \cap X_*'$$

$$= (F_1 \cap X_*') \cup (D \cap X_*')$$

$$= X_1$$

and

$$F_1^* \cup F_2 \cup \ldots \cup F_\nu \cup \ldots = \bigcup_{\alpha \varepsilon T} F_\alpha \cup D$$

$$= \bigcup_{\alpha \varepsilon T} F_\alpha \cup (\bigcap_{\mu \varepsilon T} F_\mu')$$

$$= \bigcap_{\mu \varepsilon T} ((\bigcup_{\alpha \varepsilon T} F_\alpha) \cup F_\mu')$$

$$\supset \bigcap_{\mu \varepsilon T} ((\bigcup_{\alpha \leq \mu} F_\alpha) \cup F_\mu')$$

$$= \bigcap_{\mu \varepsilon T} X$$

$$= X$$

3.21.7. THEOREM. <u>A topological space</u> (X,J) <u>is a completely normal space if and only if for any locally finite countable family</u> $\{X_1, X_2, \ldots\}$ <u>of subsets of</u> X <u>there exists a countable family of closed sets</u> $\{K_1, F_1, F_2, \ldots\}$ <u>satisfying the following conditions</u>:

(1) $\bigcup_{i=1}^{\infty} F_i \cup K = X$

(2) $F_i \cap \bigcup_{j=1}^{\infty} \overline{X}_j = \overline{X}_i \qquad i=1,2,\ldots.$

(3) $F_i \cap F_j = \overline{X}_i \cap \overline{X}_j \qquad i \neq j$

(4) $K \cap \bigcup_{i=1}^{\infty} X_i = \bigcup_{i=1}^{\infty} (\bigcup_{j \neq i} (\overline{X}_i \cap \overline{X}_j))$.

<u>Proof</u>. To prove the sufficiency let A and B be any two separated sets in X. Since $\{A,B\}$ is locally finite there exists $\{K_1, F_1, F_2\}$ of closed sets such that

(1) $K \cup F_1 \cup F_2 = X$

(2) $F_1 \cap (\bar{A} \cup \bar{B}) = \bar{A}$, $F_2 \cap (\bar{A} \cup \bar{B}) = \bar{B}$

(3) $F_1 \cap F_2 = \bar{A} \cap \bar{B}$

(4) $K \cap (\bar{A} \cup \bar{B}) = \bar{A} \cap \bar{B}$

Let $G_1 = X \sim (F_2 \cup K)$ and $G_2 = X \sim (F_1 \cup K)$. Then G_1 and G_2 are disjoint open sets. Using (2), (3), (4) we can show $A \subset G_1$ and $B \subset G_2$.

To prove the necessity let $X_i' = X_{i+1} \cup X_{i+2} \cup \ldots$ $i=0, 1, 2, \ldots$. Assume that for i-1 there exists two closed sets F_{i-1}, F_{i-1}' such that

$$\begin{cases} F_{i-1} \cup F_{i-1}' = F_{i-2}' \\ F_{i-1} \cap \left(\bigcup_{j \le i-2} (F_j \cap F_j') \cup X_{i-2}' \right) = X_{i-1} \\ F_{i-1}' \cap \left(\bigcup_{j \le i-2} (F_j \cap F_j') \cup X_{i-2}' \right) = \bigcup_{j \le i-2} (F_j \cap F_j') \cup X_{i-1}' , \end{cases}$$

$$F_1 \cup F_2 \cup \ldots \cup F_{i-1} \cup F_{i-1}' = X ,$$

$$F_j \cap X_0' = X_j \qquad j \le i-1 ,$$

$$F_j \cap F_k = X_j \cap X_k \qquad j \ne k , \; j,k \le i-1 ,$$

$$F_{i-1}' \cap X_0' = X_{i-1}' \cup \left(\bigcup_{j \le i-1} \bigcup_{k \ne j} (X_j \cap X_k) \right).$$

We now show how to construct F_i and F_i'. Now X_i and $\bigcup_{j \le i-1} (F_j \cap F_j') \cup X_i'$ are closed subsets of the completely normal space F_{i-1}' and hence there exists two closed subsets F_i and F_{i-1}' of F_{i-1}' and hence closed in X such that

$$\begin{cases} F_i \cup F_i' = F_{i-1}' \\ F_i \cap (\bigcup_{j\le i-1}(F_j \cap F_j') \cup X_{i-1}') = X_i \\ F_i' \cap (\bigcup_{j\le i-1}(F_j \cap F_j') \cup X_{i-1}') = \bigcup_{j\le i-1}(F_j \cap F_j') \cup X_{i-1}' \end{cases}$$

One can check that the following holds.

$$F_1 \cup F_2 \cup \ldots \cup F_i \cup F_i' = X \ ,$$

$$F_j \cap X_0' = X_j \qquad \text{for } j \le i \ ,$$

$$F_j \cap F_k = X_j \cap X_k \qquad j \ne k \ , \ j \ , k \le i \ ,$$

$$F_i' \cap X_0' = X_i' \cup (\bigcup_{j\le i-1} \bigcup_{k\ne j}(X_j \cap X_k)) \ .$$

Now let $K = \bigcap_{i=1}^{\infty} F_i'$. Then $\{K, F_1, F_2, \ldots\}$ will satisfy the conditions (1) - (4). Conditions (2) and (3) are obviously satisfied. To show that (1) holds we note that

$$K \cup \bigcup_{i=1}^{\infty} F_i = (\bigcap_{i=1}^{\infty} F_i') \cup (\bigcup_{j=1}^{\infty} F_j) = \bigcap_{i=1}^{\infty}((\bigcup_{j=1}^{\infty} F_j) \cup F_i')$$

$$\supset \bigcap_{i=1}^{\infty}((\bigcup_{j\le 1} F_j) \cup F_i') = \bigcap_{i=1}^{\infty} X = X$$

To see that (4) holds:

$$K \cap X_0' = (\bigcap_{i=1}^{\infty} F_i') \cap X_0'$$

$$= \bigcap_i (F_i' \cap X_0')$$

$$= \bigcap_i (X_i' \cup (\bigcup_{j\le i} \bigcup_{k\ne j} (X_j \cap X_k)))$$

And since $X_i' \cup (\bigcup_{j\le i} \bigcup_{k\ne j} (X_j \cap X_k)) \supset X_{i+1}' \cup (\bigcup_{j\le i+1} \bigcup_{k\ne j} (X_j \cap X_k))$

We have $K \cap X_0' = \bigcup_i \bigcup_{j\ne i}(X_i \cap X_j)$.

4. The main purpose of this section is to show the various relationships between the separation axioms in the form of theorems and examples.

It is easy to see from the definitions of the separation axioms the results stated in 4.1 - 4.15. Examples 4.16 - 4.21 are due to Aull and Thron [1]. 4.22 and 4.23 are standard examples.

Let (X,J) be a topological space.

4.1. THEOREM. *If (X,J) is a completely normal space then (X,J) is a normal space; and hence if (X,J) is a T_5-space then (X,J) is a T_4-space.*

4.2. THEOREM. *If (X,J) is a T_4-space then (X,J) is a Tychonoff space.*

4.3. THEOREM. *If (X,J) is a completely regular space then (X,J) is a regular space; and hence if (X,J) is a Tychonoff space then (X,J) is a T_3-space.*

4.4. THEOREM. *If (X,J) is a T_3-space then (X,J) is a Hausdorff space.*

4.5. THEOREM. *If (X,J) is a Hausdorff space then (X,J) is a T_1-space.*

4.6. THEOREM. *If (X,J) is a T_1-space then (X,J) is a T_{DD}-space.*

4.7. THEOREM. *If (X,J) is a T_1-space then (X,J) is a T_{FF}-space.*

4.8. THEOREM. *If (X,J) is a T_{DD}-space then (X,J) is a T_{YS}-space.*

4.9. THEOREM. *If (X,J) is a T_{DD}-space then (X,J) is a T_D-space.*

4.10. THEOREM. *If (X,J) is a T_{FF}-space then (X,J) is a T_Y-space.*

4.11. THEOREM. *If (X,J) is a T_{YS}-space then (X,J) is a T_Y-space.*

4.12. THEOREM. *If (X,J) is a T_Y-space then (X,J) is a T_F-space.*

4.13. THEOREM. *If (X,J) is a T_F-space then (X,J) is a T_{UD}-space.*

4.14. THEOREM. <u>If</u> (X,J) <u>is a</u> T_D-<u>space then</u> (X,J) <u>is a</u> T_{UD}-<u>space</u>.

4.15. THEOREM. <u>If</u> (X,J) <u>is a</u> T_{UD}-<u>space then</u> (X,J) <u>is a</u> T_0-<u>space</u>.

4.16. EXAMPLE. Let X be the set of all reals. Let the closed sets be of the form $C_a = \{x : x \geq a\}$. Then (X,J) is a T_0-space but not a T_{UD}, T_D, T_F, T_Y, T_{YS}, T_{FF}, T_{DD}, T_1, T_2, T_3, Tychonoff, T_4, T_5, regular, completely regular space.

<u>Proof</u>. One can check that J is a topology for X. Let $x, y \in X$ and without loss of generality assume $x < y$. Then $\{t : t < y\}$ is an open set containing x but not y. Hence (X,J) is a T_0-space.

If $x \in X$ then $\overline{\{x\}} = \{y : y \geq x\}$ and $\{x\}' = \{y : y > x\}$ which is not closed and is not a union of disjoint closed sets as all the closed sets are nested. Hence (X,J) is not a T_{UD}-space. It follows from this that (X,J) is not a T_D, T_F, T_Y, T_{YS}, T_{FF}, T_{DD}, T_1, T_2, T_3, Tychonoff, T_4, T_5- space. It is not a regular space, otherwise (X,J) is a T_3-space by 3.17.1, which is a contradiction. Hence it is not a completely regular space also.

4.17. EXAMPLE. Let X be the set of real numbers. Let the closed sets be $\emptyset$, X, $\{x\}$, $x \neq 0$, and finite union of these sets. Then (X,J) is a T_{UD}, T_F, T_Y, T_{YS}, T_{FF}-space but not of the following: T_D-space, T_{DD}-space.

<u>Proof</u>. That J is a topology for X is easy to check. Let $x, y \in X$, $x \neq y$. If neither x nor y is 0 then since $\{x\}$ and $\{y\}$ are closed $\overline{\{x\}} \cap \overline{\{y\}} = \emptyset$. If $y = 0$, then, since $\overline{\{y\}} = X$, $\overline{\{x\}} \cap \overline{\{y\}} = \overline{\{x\}} \cap X = \{x\}$. Hence (X,J) is a T_{YS}-space. It follows from this that (X,J) is also a T_Y, T_F, T_{UD}-space. That (X,J) is a T_{FF}-space follows immediately, using 3.13.2, from the fact that for every $x \in X$, except $x = 0$, $\{x\}$ is closed.

Let $x = 0$. Since all closed sets, except X, are finite and $\overline{\{0\}} = X$, we see that $\{0\}' = X \sim \{0\}$ is not closed. Hence (X,J) is not a T_D-space and thus not a T_{DD}-space.

4.18. EXAMPLE. Let X be the set of real numbers. Denote $C_a = \{x : x \geq a\}$ and $D_a = \{x : x > a\}$. Let the closed sets be $\emptyset$, X, C_a and D_a. Then (X,J) is a T_{UD}, T_D-space but not of the following: T_F-space, T_{DD}-space.

Proof. Since the sets C_a and D_a are nested, it is clear that the closed sets are closed under finite union and arbitrary intersection.

Let $x \in X$. Then $\overline{\{x\}} = C_x$ and $\{x\}' = D_x$, which is closed. Hence (X,J) is a T_D-space, and thus also a T_{UD}-space.

Let $x \in X$. Then $\{x\}' = D_x$. Let $y \in D_x$. Then $\{y\}' = D_y \neq \emptyset$. Hence (X,J) is not a T_F-space, and thus not a T_{DD}-space.

4.19. EXAMPLE. Let X be the set of real numbers. Let A be the set of all real numbers which are not integers. Let the closed sets be $\emptyset$, X, A, all finite subsets of A and all sets of the form $A \cup N$, where N is a finite set of integers. Then (X,J) is a T_{UD}, T_F, T_D-space but not a T_Y-space.

Proof. There is no trouble in checking that the closed sets are closed under finite union and arbitrary intersection.

Let $x \notin F$, F any finite set. If x is not an integer then $\{x\}$ is closed and we have $F \vdash\!\!\dashv x$. Suppose then x is an integer. If F contains no integer then F is closed and we have $x \vdash\!\!\dashv F$. If F contains all integer then $X \sim (A \cup \{x\})$ is an open set containing F and we have $F \vdash\!\!\dashv x$. If F contains both integers and non-integers then $X \sim (A \cup F)$ is an open set containing x and we have $x \vdash\!\!\dashv F$. Hence (X,J) is a T_F-space.

Let $x \in X$. If x is not an integer then $\{x\}$ is closed and $\{x\}' = \emptyset$. If x is an integer then $\overline{\{x\}} = A \cup \{x\}$. Then $\{x\}' = A$, which is closed. Hence (X,J) is a T_D-space, and thus also a T_{UD}-space.

Let $x,y \in X$, $x \neq y$, x and y integers. Then $\overline{\{x\}} = A \cup \{x\}$ and $\overline{\{y\}} = A \cup \{y\}$. Then $\overline{\{x\}} \cap \overline{\{y\}} = A$. Hence (X,J) is not a T_Y-space.

4.20. EXAMPLE. Let X be the set of all real numbers. Let the closed sets be $\emptyset$, X and sets of the form $\{x, -x\}$, $\{x\}$ if $x \geq 0$, or finite union of such sets. Then (X,J) is a T_{DD}, T_Y, T_{YS}, T_D, T_F, T_{UD}-space but not a T_{FF}, T_1-space.

Proof. One can easily check that we have a topology for X. Let $x \in X$. If $x \geq 0$, then $\overline{\{x\}} = \{x\}$ and hence $\{x\}' = \emptyset$. If $x < 0$ then $\overline{\{x\}} = \{x, -x\}$ and $\{x\}' = \{-x\}$ which is closed. Hence (X,J) is a T_D-space. Let $x,y \in X$, $x \neq y$. If $x,y \geq 0$ then clearly $\{x\}' \cap \{y\}' = \emptyset$. If $x < 0$, $y \geq 0$ then $\{x\}' = \{-x\}$ and $\{y\}' = \emptyset$ and we have $\{x\}' \cap \{y\}' = \emptyset$. If $x,y < 0$ then $\{x\}' = \{-x\}$ and $\{y\}' = \{-y\}$ and we have $\{x\}' \cap \{y\}' = \emptyset$. Hence (X,J) is a T_{DD}-space, and thus also a T_{UD}, T_F, T_Y, T_{YS}-space.

Let $F_1 = \{x, -y\}$ and $F_2 = \{y, -x\}$, $x \neq y$, $x,y < 0$. Then since $\overline{\{x\}} = \{x,-x\}$ and $\overline{\{y\}} = \{y,-y\}$ it is impossible to have $F_2 \vdash\!\!- F_1$ or $F_1 \vdash\!\!- F_2$. Hence (X,J) is not a T_{FF}-space or T_1-space.

4.21. EXAMPLE. Let X be the set of all real numbers. Let every set containing 0 together with $\emptyset$, X be closed. Then (X,J) is a T_{FF}, T_D, T_Y, T_F, T_{UD}-space but not a T_{YS}, T_1-space.

Proof. The closed sets are closed under finite union and arbitrary intersections follows from the fact that finite union of sets containing 0 and arbitrarily intersections of sets containing 0 contains 0.

Let $x \in X$. If $x = 0$ then $\{0\}$ is closed and $\{0\}' = \emptyset$. If $x \neq 0$ then $\overline{\{x\}} = \{x,0\}$ and $\{x\}' = \{0\}$ which is closed. Hence (X,J) is a T_D-space.

Let F_1 and F_2 be any two disjoint finite sets. If neither F_1 nor F_2 contains 0 then F_1 and F_2 are open and we have $F_1 \vdash\!\!- F_2$ and $F_2 \vdash\!\!- F_1$. Suppose without loss of generality F_1 contains 0. Then F_1 is closed and we have $F_2 \vdash\!\!- F_1$. Hence (X,J) is a T_{FF}-space and thus also a T_F, T_{UD}-space.

That (X,J) is not a T_{YS}-space follows from the fact that for $x \neq y \neq 0$ we have $\overline{\{x\}} = \{x,0\}$ and $\overline{\{y\}} = \{y,0\}$, which implies $\overline{\{x\}} \cap \overline{\{y\}} = \{0\}$. Hence it is not a T_1-space also.

4.22. EXAMPLE. Let X be any uncountable set and the topology J for X consist of $\emptyset$, X and all complements of countable sets. Then (X,J) is a T_0, T_{UD}, T_D, T_F, T_Y, T_{YS}, T_{FF}, T_{DD}, T_1-space but not of the following: Hausdorff space, T_3-space, Tychonoff space, T_4-space, T_5-space, regular space, completely regular space, normal space and completely normal space.

Proof. It is straight forward to check that J is a topology. Let $x,y\in X$, $x\neq y$. Let $A=X\sim\{x\}$ and $B=X\sim\{y\}$. Then A is an open set containing y but not x and B is an open set containing x but not y. Hence (X,J) is a T_1-space and thus also a T_0, T_{UD}, T_D, T_F, T_Y, T_{YS}, T_{FF}, T_{DD}-space.

Now let $x,y\in X$, $x\neq y$, and A and B any two disjoint open sets containing x and y respectively. Then $A=X\sim U$ and $B=X\sim V$ where U and V are countable. Since X is uncountable, A and B are uncountable. But since A and B are disjoint, $B\subset U$ and $A\subset V$, contradicting that U and V are countable. Therefore (X,J) is not a Hausdorff space. It follows from this that it cannot be a T_3, Tychonoff, T_4, T_5-space, and hence cannot be a regular, completely regular, normal, completely normal space.

4.23. EXAMPLE. Let X be the set of all real numbers, and R the set of rational numbers. Let the topology J for X be the family of subsets of X defined as follows: a subset G of X is in J if and only if for each $x\in G$, there is an open interval A in the usual topology for X such that $x\in A$ and $A\cap R\subset G$. Then (X,J) is a Hausdorff space but not of the following: regular space, T_3-space, completely regular space, Tychonoff space, normal space, T_4-space, completely normal space, T_5-space.

Proof. To check that J is a topology is straight forward, and that (X,J) is a Hausdorff space is clear. Let $C=X\sim R$. Since R is open, C is closed. Let x be any rational number. Then $x\notin C$. Let G be any open set containing x. Then there is an open interval A in the usual topology for X containing x such that

$A \cap R \subset G$. But there is an irrational number $y \in A$. If K is any open set containing C then $y \in K$ and hence there is an open interval B in usual topology for X such that $y \in B$ and $B \cap R \subset K$. Since A and B are two interval containing y, $A \cap B$ is an interval and $A \cap B \cap R \subset G$ and $A \cap B \cap R \subset K$. Hence K contains points of G. Hence there exists no disjoint open sets G and K containing x and C respectively. Therefore (X,J) is not a regular space, and hence not a T_3, completely regular, Tychonoff, T_4, T_5-space. Since it is not T_4, T_5-space, it cannot be a normal, completely normal space.

4.24. EXAMPLE. Let $X = \{a,b,c\}$ and $J = \{\emptyset, \{a\}, \{b,c\}, X\}$. Then (X,J) is a regular, completely regular, normal, completely normal space but not of the following: T_0, T_{UD}, T_D, T_F, T_Y, T_{YS}, T_{FF}, T_{DD}, T_1, Hausdorff, T_3, Tychonoff, T_4, T_5-space.

<u>Proof</u>. That J is a topology for X is easy to check. And since all open sets are also closed and all closed sets are also open (X,J) is easily seen to be a regular, normal, completely normal space. That (X,J) is a completely regular space follows from the well known result that regularity and completely regularity are equivalent in a normal space.

That (X,J) is not a T_0-space follows from the fact that the only open sets containing b or c are X and $\{b,c\}$. Hence (X,J) cannot be a T_{UD}, T_D, T_F, T_Y, T_{YS}, T_{FF}, T_{DD}, T_1, T_2, T_3, Tychonoff, T_4, T_5-space.

4.25. EXAMPLE. Let $X = \{a,b,c,d\}$ and $J = \{\emptyset, \{a,b,c\}, \{b,c,d\}, \{b,c\}, \{b\}, \{b,d\}, \{d\}, X\}$. Then (X,J) is a normal, completely normal space but not a regular, completely regular space.

<u>Proof</u>. It is not hard to check that J is a topology. One can also check that the only sets that the set $\{d\}$ and any one of $\{a\}$, $\{b\}$, $\{c\}$, $\{a,b\}$, $\{a,c\}$, $\{b,c\}$, $\{a,b,c\}$, are separated. Let $G_1 = \{d\}$ and $G_2 = \{a,b,c\}$. Then G_1 and G_2 are the required disjoint open sets to show that (X,J) is a

completely normal space, and hence also a normal space. That (X,J) is not a regular space follows from the fact that the only open set containing the closed set $\{a,d\}$ is X. Hence (X,J) cannot be a completely regular space.

4.26. LEMMA. Let X_0 be the set of ordinals less than or equal to Ω, the first uncountable ordinal. Then any countable subset $\{x_a\}$ of X_0, $x_a < \Omega$, has a least upper bound $x < \Omega$.

Proof. Let x_0 be the first ordinal in X_0. The result follows immediately from the fact that $x_a < x_0 + x_1 + x_2 + \ldots\ldots$ for each a and by definition of addition of ordinals, $x_0, + x_1 + x_2 + \ldots\ldots$ is countable.

4.27. EXAMPLE. Let $X_0 = \{y : y$ is an ordinal and $y \leq \Omega$, the first uncountable ordinal.$\}$

$X_1 = \{y : y$ is an ordinal and $y \leq \omega$, the first infinite ordinal$\}$.
Let X_0 and X_1 have the order topology, i.e. the family of all sets of the form $\{x : x > a\}$ or $\{x : x < b\}$ is a subbase for the topology. Let $Z = X_0 \times X_1$ and $Z_1 = Z \sim \{(\Omega, \omega)\}$. Denote the topology for Z by J and for Z_1 by J'. Then (Z,J) is a normal, T_4, Tychonoff space but not a completely normal space, T_5-space and (Z_1,J') is a regular, T_3, completely regular, Tychonoff space that is not normal. This example, of course, is the well known Tychonoff plank.

Proof. Since every ordinal has an immediate successor and every non-limit ordinal has an immediate predeccessor, sets of the form $[\sigma,\tau]$, σ not a limit ordinal, are both open and closed. It is clear that X_0 with the order topology is a Hausdorff space. We will show that it is compact. Let $\{G_\alpha\}$ be any open covering of X_0. Then there exists $x_0 \varepsilon G_\theta$ such that $\{x : x_0 < x \leq \Omega\} \subset G_0$. Now let $A = \{x: x_1 \leq x \leq x_0$, x_1 the first element of X_0 and x a point of X_0 such that $\{y : x_1 \leq y < x\}$ is not covered by a finite subcollection of $\{G_\alpha\}$.$\}$. We will show that $A = \emptyset$. We first note that $x_1 \notin A$. If $A \neq \emptyset$, then, since X_0 is well-ordered, A has a first element b, say.

Let $G_b \varepsilon \{G_\alpha\}$ be such that $b \varepsilon G_b$. Then there exists a set $\{y : c < y < d\}$, $c < b < d$, such that $\{y : c < y < d\} \subset G_b$. Since b is the first element of A, $c \notin A$. Hence $\{y : x_1 \leq y < c\}$ is covered by a finite subfamily of $\{G_\alpha\}$. Then this finite subfamily along with G_b covers $\{y : x_1 \leq y < b\}$. Therefore $b \notin A$, which is a contradiction. Hence $A = \emptyset$, and therefore, for every x, $x_1 \leq x \leq x_0$, $\{y : x_1 \leq y < x\}$ is covered by a finite subfamily $\{G_\alpha\}$. In particular let $\{G_{\alpha_i} : i = 1, 2, \ldots, n\}$ be a finite subfamily of $\{G_\alpha\}$ that covers $\{y : x_1 \leq y < x_0\}$. Then $\{G_{\alpha_i}\} \cup \{G_0\}$ covers X_0. Hence X_0 with the order topology is compact.

Since X_1 is a closed subset of X_0, X_1 with the relative topology is a compact Hausdorff space.

Consider $Z = X_0 \times X_1$ with the product topology J. Then (Z,J) is a compact Hausdorff space and hence a Tychonoff, normal, T_4-space.

Let $Z_1 = Z \sim \{(\Omega, \omega)\}$ with the relative topology J'. Let $A = \{z : z \varepsilon Z, z = (x,\omega)$ where x is arbitrary$\}$ and $B = \{z : z \varepsilon Z, z = (\Omega, x)$ where x is arbitrary$\}$. Then A and B are closed subsets of Z since they are inverse images of points under the projection map. Let $A_1 = Z_1 \cap A$ and $B_1 = Z_1 \cap B$. Then A_1 and B_1 are disjoint closed subsets of Z_1. Let G_1 and G_2 be any two open sets of Z_1 such that $A_1 \subset G_1$ and $B \subset G_2$. Since G_2 is open, for each $x \neq \omega$ in X_1 there is f(x) in X_0 such that if $y > f(x)$, then $(y,x) \varepsilon G_2$. And since $\{f(x) : x \varepsilon X_1, x \neq \omega\}$ is countable, there exists, by 4.26, $x_0 < \Omega$ such that $\{(y,x) : x \varepsilon X \sim \{\omega\}, y \varepsilon X_0 \sim \{\Omega\}, y > x_0\} \subset G_2$. Now let $y_0 \varepsilon X \sim \{\Omega\}$, $y_0 > x_0$. Since $(y_0, \omega) \varepsilon A_1 \subset G_1$ and G_1 is open, there is an $n < \omega$ such that $\{(y_0,t) : n < t \leq \omega\} \subset G_1$. Hence $(y_0,t_0) \varepsilon G_1 \cap G_2$ if $n < t_0 < \omega$. It follows that there are no disjoint open sets G_1, G_2 containing A and B respectively. Hence (Z_1,J) is not a completely normal space by 3.21.1.

Since (Z,J) is a Tychonoff space, (Z_1,J') is also a Tychonoff space, and hence a regular, T_3, completely regular space.

4.28. EXAMPLE. Let (Z,J) be the same space as denoted in 4.27 i.e., Z is the Tychonoff plank. Z is then compact Hausdorff space and hence a completely regular space. Let (Z_1,J') be the same subspace of (Z,J) as in 4.27. Then (Z_1,J') is a completely regular space also.

4.28.1. LEMMA. <u>If f is a continuous real-valued function defined on Z_1 and if there exists a sequence of ordinals less than ω, $\{i_n\}$, $n = 1, 2, \ldots$ such that $f(\Omega, i_n) \geq r$ for $n = 1, 2, 3, \ldots$ then there exists an ordinal $\delta_0 < \Omega$ such that $f(\delta, \omega) \geq r$ for all $\delta > \delta_0$. The statement also holds if both inequality signs are reversed.</u>

<u>Proof</u>. Since f is continuous, there exists, for every pair of integers m and n, an ordinal δ_{mn} such that if $\delta > \delta_{mn}$ then $f(\delta, i_n) > r - \frac{1}{m}$. Let δ_0 be the least upper bound of the ordinals δ_{mn}. Then clearly $\delta_0 < \Omega$, as $\{\delta_{mn}\}$ is countable and each $\delta_{mn} < \Omega$. If $\delta > \delta_0$ then $f(\delta, i_n) \geq \sup_m (r - \frac{1}{m}) = r$. Since f is continuous it follows that $\lim_n f(\delta, i_n) = f(\delta, \omega) \geq r$. The proof goes the same way if inequality is reversed.

Let N be the set of all integers with the discrete topology. Form the cartesian product $N \times Z$. A point of $N \times Z$ may be represented as a triple (n, δ, α) where $n = 0, \pm 1, \pm 2, \ldots$, $\delta = 0, 1, 2, \ldots, \Omega$, $\alpha = 0, 1, 2, \ldots, \omega$. All points (n, Ω, ω) are omitted. We now make the following identifications: we identify $(2n, \delta, \omega)$ with $(2n+1, \delta, \omega)$ for $\delta < \Omega$, and identify $(2n+1, \Omega, \alpha)$ with $(2n+2, \Omega, \alpha)$ for $\alpha < \omega$. Denote the resulting space by K. Goemetrically K is obtained as follows: We take as many planks as there are integers and order them according to the usual order for the integers. To the top edge of the 2n-th plank we attach to it the top edge of the 2n+1-st plank. To the right edge of the 2n+1-st plank we attach

to it the right edge of the 2n+2-nd plank. Then we delete the point (n, Ω, ω) for all n.

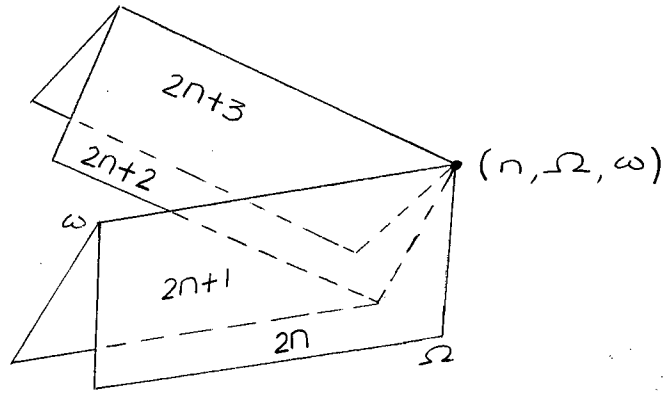

Let $K_1 = K \cup \{(n, \Omega, \omega)\}$. For the open neighborhoods of (n, Ω, ω) we take the sets consists all but a finite number of the planks. That this gives us a topology for K_1 is easy to check. K_1 is a Hausdorff space because each plank is a Hausdorff space. To show that K_1 is compact we take any open covering of K_1. Since any open set containing (n, Ω, ω) contains all but a finite number of the plank, and since each plank is compact we see that we have a finite subcover for K_1. Hence, since K_1 is a compact Hausdorff space, K_1 is a completely regular space. Then K, a subspace of K_1, is a completely regular space.

Let $A = K \cup \{a+\} \cup \{a-\}$. Neighborhoods $N_k(a+)$ are the sets of all triples in K for which $n > k$, along with a+. Neighborhoods $N_k(a-)$ are the sets of all triples in K for which $n < -k$, along with a- itself. We assume that k assume all positive integral values.

To see that A is a T_0-space we have only to check that given any two distinct points, and if one of these points is a+ or a-, then we can find a neighborhood of one of these points that doesn't contain the other point. But clearly by choosing k large enough we can choose a neighborhood of a+ or a- that will exclude the other point. To see that A is regular we need only to check to see if there exists an open set H such that if G is any open set

containing a+ then $a+ \varepsilon H \subset \overline{H} \subset G$. Let $G = N_k(a+)$. Then choose $H = N_{k+2}(a+)$. Since the closure of $N_{k+2}(a+)$ includes $N_{k+2}(a+)$ plus the top edge or the right edge of k+2-nd plank, depending on whether k+2 is odd or even, we see that $a+ \varepsilon H \subset \overline{H} \subset G$. Similarly for a-. Hence A is a regular T_0-space and by 3.17.1 A is a T_3-space.

To show that A is not a completely regular space, we will show that any real-valued continuous function defined on A has the same value at a+ and a-. Let f be a continuous function defined on A and f(a+)=1. Then for some odd integer $n \varepsilon N$, $f(n, \Omega, \alpha) \geq \frac{1}{2}$ for all $\alpha < \omega$. By 4.28.1, $f(n, \delta, \omega) \geq \frac{1}{2}$ for all $\delta > \delta_0$, where $\delta_0 < \Omega$. It follows from this that $f(n-2, \Omega, \alpha) > \frac{1}{3}$ for all but a finite number of ordinals $\alpha < \omega$. Assuming the contrary, using 4.28.1, $f(n-1, \delta, \omega) = f(n, \delta, \omega) \leq \frac{1}{3}$ for all $\delta > \delta'$, for some δ', which is a contradiction. By induction it can be shown that for all even positive integer p and for some $\alpha < \omega$, $f(n-p, \Omega, \alpha) \geq \frac{1}{p+1}$. Since f is continuous this implies that $f(a-) \geq 0$. Similarly we can find other sequences of points $\{(m-q, \Omega, \alpha)\}$ for all even integers q, such that $\lim_{q\to\infty} (m-q, \Omega, \alpha) = a-$ and $f(a-) \geq t_m$ for every $0 \leq t_m < 1$. Hence f(a-) = 1 and A is not a completely regular space. This example is part of the example by Hewitt [5] in which he constructed a T_3-space such that every continuous function defined on it is a constant.

4.30. The various relationships between the separation axioms are summarized in the table below. A + in the intersection of a row and column means that the property listed in that row implies the property listed in that column, while - shows no such implication exists. The numbers in the intersections of rows and columns refer to the example that shows no such implication, while the + are backed by arguments using possible several theorems from 4.1 - 4.15, together with the table itself, since implication is transitive.

We use the following notation in the table.

T_R = regular	T_N = normal
T_{CR} = completely regular	T_{CN} = completely normal
T = Tychonoff	

	T_0	T_{UD}	T_D	T_F	T_Y	T_{YS}	T_{FF}	T_{DD}	T_1	T_2	T_R	T_3	T_{CR}	T	T_N	T_4	T_{CN}	T_5
T_0	+	$4.\bar{1}6$	$4.\bar{1}6$	$4.\bar{1}6$	$4.\bar{1}6$	$4.\bar{1}6$	$4.\bar{1}6$	$4.\bar{1}6$	$4.\bar{1}6$	$4.\bar{1}6$	$4.\bar{1}6$	$4.\bar{1}6$	$4.\bar{1}6$	$4.\bar{1}6$	$4.\bar{1}6$	$4.\bar{1}6$	$4.\bar{1}6$	$4.\bar{1}6$
T_{UD}	+	+	$4.\bar{1}7$	$4.\bar{1}8$	$4.\bar{1}9$	$4.\bar{2}1$	$4.\bar{2}0$	$4.\bar{1}7$	$4.\bar{2}0$	$4.\bar{2}2$	$4.\bar{2}2$	$4.\bar{2}2$	$4.\bar{2}2$	$4.\bar{2}2$	$4.\bar{2}2$	$4.\bar{2}2$	$4.\bar{2}2$	$4.\bar{2}2$
T_D	+	+	+	$4.\bar{1}8$	$4.\bar{1}9$	$4.\bar{2}1$	$4.\bar{2}0$	$4.\bar{1}8$	$4.\bar{2}0$	$4.\bar{2}2$	$4.\bar{2}2$	$4.\bar{2}2$	$4.\bar{2}2$	$4.\bar{2}2$	$4.\bar{2}2$	$4.\bar{2}2$	$4.\bar{2}2$	$4.\bar{2}2$
T_F	+	+	$4.\bar{1}7$	+	$4.\bar{1}9$	$4.\bar{2}1$	$4.\bar{2}0$	$4.\bar{1}7$	$4.\bar{2}0$	$4.\bar{2}2$	$4.\bar{2}2$	$4.\bar{2}2$	$4.\bar{2}2$	$4.\bar{2}2$	$4.\bar{2}2$	$4.\bar{2}2$	$4.\bar{2}2$	$4.\bar{2}2$
T_Y	+	+	$4.\bar{1}7$	+	+	$4.\bar{2}1$	$4.\bar{2}0$	$4.\bar{1}7$	$4.\bar{2}0$	$4.\bar{2}2$	$4.\bar{2}2$	$4.\bar{2}2$	$4.\bar{2}2$	$4.\bar{2}2$	$4.\bar{2}2$	$4.\bar{2}2$	$4.\bar{2}2$	$4.\bar{2}2$
T_{YS}	+	+	$4.\bar{1}7$	+	+	+	$4.\bar{2}0$	$4.\bar{1}7$	$4.\bar{2}0$	$4.\bar{2}2$	$4.\bar{2}2$	$4.\bar{2}2$	$4.\bar{2}2$	$4.\bar{2}2$	$4.\bar{2}2$	$4.\bar{2}2$	$4.\bar{2}2$	$4.\bar{2}2$
T_{FF}	+	+	$4.\bar{1}7$	+	+	$4.\bar{2}1$	+	$4.\bar{1}7$	$4.\bar{2}1$	$4.\bar{2}2$	$4.\bar{2}2$	$4.\bar{2}2$	$4.\bar{2}2$	$4.\bar{2}2$	$4.\bar{2}2$	$4.\bar{2}2$	$4.\bar{2}2$	$4.\bar{2}2$
T_{DD}	+	+	+	+	+	+	$4.\bar{2}0$	+	$4.\bar{2}0$	$4.\bar{2}2$	$4.\bar{2}2$	$4.\bar{2}2$	$4.\bar{2}2$	$4.\bar{2}2$	$4.\bar{2}2$	$4.\bar{2}2$	$4.\bar{2}2$	$4.\bar{2}2$
T_1	+	+	+	+	+	+	+	+	+	$4.\bar{2}2$	$4.\bar{2}2$	$4.\bar{2}2$	$4.\bar{2}2$	$4.\bar{2}2$	$4.\bar{2}2$	$4.\bar{2}2$	$4.\bar{2}2$	$4.\bar{2}2$
T_2	+	+	+	+	+	+	+	+	+	+	$4.\bar{2}3$	$4.\bar{2}3$	$4.\bar{2}3$	$4.\bar{2}3$	$4.\bar{2}3$	$4.\bar{2}3$	$4.\bar{2}3$	$4.\bar{2}3$
T_R	$4.\bar{2}4$	$4.\bar{2}4$	$4.\bar{2}4$	$4.\bar{2}4$	$4.\bar{2}4$	$4.\bar{2}4$	$4.\bar{2}4$	$4.\bar{2}4$	$4.\bar{2}4$	$4.\bar{2}4$	+	$4.\bar{2}4$	$4.\bar{2}8$	$4.\bar{2}4$	$4.\bar{2}7$	$4.\bar{2}4$	$4.\bar{2}7$	$4.\bar{2}4$
T_3	+	+	+	+	+	+	+	+	+	+	+	+	$4.\bar{2}8$	$4.\bar{2}8$	$4.\bar{2}7$	$4.\bar{2}7$	$4.\bar{2}7$	$4.\bar{2}7$
T_{CR}	$4.\bar{2}4$	$4.\bar{2}4$	$4.\bar{2}4$	$4.\bar{2}4$	$4.\bar{2}4$	$4.\bar{2}4$	$4.\bar{2}4$	$4.\bar{2}4$	$4.\bar{2}4$	$4.\bar{2}4$	+	$4.\bar{2}4$	+	$4.\bar{2}4$	$4.\bar{2}7$	$4.\bar{2}4$	$4.\bar{2}7$	$4.\bar{2}4$
T	+	+	+	+	+	+	+	+	+	+	+	+	+	+	$4.\bar{2}7$	$4.\bar{2}7$	$4.\bar{2}7$	$4.\bar{2}7$
T_N	$4.\bar{2}4$	$4.\bar{2}4$	$4.\bar{2}4$	$4.\bar{2}4$	$4.\bar{2}4$	$4.\bar{2}4$	$4.\bar{2}4$	$4.\bar{2}4$	$4.\bar{2}4$	$4.\bar{2}4$	$4.\bar{2}5$	$4.\bar{2}4$	$4.\bar{2}5$	$4.\bar{2}4$	+	$4.\bar{2}4$	$4.\bar{2}7$	$4.\bar{2}4$
T_4	+	+	+	+	+	+	+	+	+	+	+	+	+	+	+	+	$4.\bar{2}7$	$4.\bar{2}7$
T_{CN}	$4.\bar{2}4$	$4.\bar{2}4$	$4.\bar{2}4$	$4.\bar{2}4$	$4.\bar{2}4$	$4.\bar{2}4$	$4.\bar{2}4$	$4.\bar{2}4$	$4.\bar{2}4$	$4.\bar{2}4$	$4.\bar{2}5$	$4.\bar{2}4$	$4.\bar{2}5$	$4.\bar{2}4$	+	$4.\bar{2}4$	+	$4.\bar{2}4$
T_5	+	+	+	+	+	+	+	+	+	+	+	+	+	+	+	+	+	+

4.31. OBSERVATIONS.

We make the convention that $T_\alpha \to T_\beta$ shall mean that every T_α -space is a T_β -space. Using this convention, then, the following chart shows the relationships of all the separation axioms.

$$
\begin{tikzcd}
T_5 \arrow[dr] \arrow[d] & \\
 & \text{completely normal} \\
T_4 \arrow[dr] \arrow[d] & \\
 & \text{normal} \\
\text{Tychonoff} \arrow[dr] \arrow[d] & \\
 & \text{completely regular} \\
T_3 \arrow[dr] \arrow[d] & \\
 & \text{regular} \\
T_2 \arrow[d] & \\
T_1 \arrow[r] \arrow[dd] & T_{DD} \arrow[r] \arrow[d] & T_D \arrow[dd] & \\
 & T_{YS} \arrow[d] & & \\
T_{FF} \arrow[r] & T_Y \arrow[r] & T_F \arrow[r] & T_{UD} \arrow[r] & T_0
\end{tikzcd}
$$

Now in view of 3.17.1 every regular T_0-space is a T_3-space and hence we can easily see that the spaces T_0, T_{UD}, T_D, T_F, T_Y, T_{YS}, T_{DD}, T_{FF}, T_1 and T_2 are equivalent in a regular space.

The space T_3 is defined in terms of regular, T_1-space and the space Tychonoff in terms of completely regular, T_1-space. However, 3.17.1 and 3.19.1 show that we can characterize T_3-space by regular, T_0-space and Tychonoff spaces by

completely regular, T_0-space. And since the space T_4 is defined in terms of normal, T_1-space and the space T_5 in terms of completely normal, T_1-space, the question arises whether we can similarly replace T_1-spaces by T_0-spaces. That this cannot be done is shown in 4.25. As to whether there exists a weaker axiom T_α than T_1 such that a normal, T_α -space is a T_1-space, none of the axioms here seem to satisfy this requirement. However, the following is true:

4.30.1. THEOREM. [1] <u>In a normal space, T_{UD}-spaces and T_D-spaces are equivalent. T_F-spaces and T_Y-spaces are equivalent and, regular and completely regular spaces are equivalent.</u>

4.30.2. THEOREM. [1] <u>In a completely normal space, T_F-spaces, T_Y-spaces, T_{YS}-spaces and T_{DD}-spaces are equivalent.</u>

If we look at 4.16 and 4.18 closely we note that the sets X referred to are exactly the same set, while there is a slight difference in the defining topologies, namely, in 4.18, in addition to the closed sets in 4.16 the sets D_a are also closed. Hence we have more closed sets in 4.18 than in 4.16, and this lack of a certain number of closed sets is the reason for the space defined in 4.16 to fail to be a T_{UD}, T_D-space. And since there are as many open sets as there are closed sets, this is equivalent to say that there are not enough open sets in the defining topology to have a T_{UD}, T_D-space. The question is when do we have enough open sets for our space to have a certain property. Obviously, this is going to depend on our set X. For example, in 4.22 the uncountable set X with the topology defined there is a T_1-space that is not Hausdorff. And yet, if X were countable, then with the same definition of the topology the space is Hausdorff. In fact, the space is discrete and hence the conditions of all the separation axioms are satisfied.

Comparing 4.17 with 4.18 we see that there are enough open sets in the topology in 4.17 to have a T_F-space but not a T_D-space, while in 4.18 there are enough open sets in the topology for a T_D-space but not a T_F-space. This suggests certain topologies are inadequate for certain purposes. For instance, the topology in 4.17 is inadequate to have a T_D-space because every non-empty open set contains the point 0. We can easily remove this inadequacy by letting the closed sets be $\emptyset$, X, $\{x\}$ for all $x \varepsilon X$, and finite union of these sets. Essentially we have added more open sets to the original topology in such a way that we still have a topology, but now adequate enough to have a T_D-space. However, we cannot conclude from this that we need more open sets to have a T_D-space than a T_F-space. For example, in 4.18 if we add the sets $\{x\}$, for $x \varepsilon X$ and finite union of these sets as well as finite unions with the sets C_a and D_a to the original closed sets, the resulting space is a T_F-space. So that, given a set X and two topologies J_1, J_2 defined on it such that (X,J_1) is a T_α-space and (X,J_2) is a T_β-space, and if neither $T_\alpha \to T_\beta$ nor $T_\beta \to T_\alpha$, then we cannot, in general, say that there are more open sets in J_1 than in J_2 or more in J_2 than in J_1. Suppose now that we know $T_\alpha \to T_\beta$. Can we then say that there are more open sets in J_1 than in J_2? This is an open question.

BIBLIOGRAPHY

1. Aull, C.E. and Thron, W.J., Separation axioms between T_0 and T_1, Nederl. Akad. Wetensch. Proc. Ser. A, Vol.65 (1962) pp.26-37.

2. Bourbaki, N., Topologie generale, Actualites Sci. Ind., Paris.

3. Est, W.T. and Freudenthal, H., Treunung durch stitige Funktionen in topologischen Raumen, Indagationes Math., vol.13 (1951) pp.359-368.

4. Gaal, S.A., Point Set Topology, Academic Press, 1964.

5. Hewitt, E., On two problems of Urysohn, Ann. of Math., vol.47 (1946) pp.503-509.

6. Inokuma, T., On a characteristic property of completely normal spaces, Proc. Japan Acad., vol.31 (1955) pp.19-24.

7. Kelley, J.L., General Topology, Van Nostrand, Princeton, New Jersey, 1955.

8. Kenyon, H. and Morse, A.P., Runs, Pacific Journal of Mathematics, vol.8 (1958) pp.811-824.

9. Moore, E.H. and Smith, H.L., A general theory of limits, Amer. J. Math., vol.44 (1922) pp.102-121.

10. Pervin, W.J., Foundations of General Topology, Academic Press, New York, N.Y., 1964.

11. Suzuki, J., Some properties of completely normal spaces, Proc. Japan Acad., vol.33 (1957) pp.19-24.

12. Urysohn, P., Uber die Machtigkeit der zussammeuhagendeu Menger, Math Aun., vol.94 (1925) pp.262-295.

13. Vaidyauathaswamy, Treatise on set topology I, Madras, 1947.

14. Weil, A., Sur les espaces a structure uniforme et sur la topologie generale, Actualites Sci. Ind., vol.551 (1937), Paris.

15. Youngs, J.W.T., A note on separation axioms and their application in the theory of a locally connected topological space, Bull. Amer. Math. Soc., vol.49 (1943) pp.383-385.