c.1

ESTIMATION OF DYNAMIC EQUIVALENTS OF EXTERNAL ELECTRIC POWER SYSTEMS

by

MOHAMED ALI AHMED EL-SHARKAWI

B.Sc., Cairo High Institute of Technology, 1971

M.A.Sc., University of British Columbia, 1977

A THESIS SUBMITTED IN PARTIAL FULFILLMENT OF
THE REQUIREMENTS FOR THE DEGREE OF
DOCTOR OF PHILOSOPHY

in

THE FACULTY OF GRADUATE STUDIES
(Department of Electrical Engineering)

We accept this thesis as conforming
to the required standard

THE UNIVERSITY OF BRITISH COLUMBIA
June, 1980

© Mohamed Ali Ahmed El-Sharkawi, 1980

In presenting this thesis in partial fulfilment of the requirements for an advanced degree at the University of British Columbia, I agree that the Library shall make it freely available for reference and study. I further agree that permission for extensive copying of this thesis for scholarly purposes may be granted by the Head of my Department or by his representatives. It is understood that copying or publication of this thesis for financial gain shall not be allowed without my written permission.

Department of Elec. Eng.

The University of British Columbia
2075 Wesbrook Place
Vancouver, Canada
V6T 1W5

Date 31/7/1980

ABSTRACT

The growing size and complexity of modern electric power systems necessitate the need to develop dynamic equivalents of the external system for local system dynamic studies. An estimation technique is developed in this thesis to identify the dynamic equivalents of external systems. An introduction is given in Chapter 1. A Basic multi-machine model for dynamic studies is developed in Chapter 2. The dynamic equivalent is estimated from information measured locally due to an intentional disturbance. To reduce computational requirements, a weighted least-squares algorithm with adaptive step size scheme is used, and a proper model for the external equivalent is chosen in Chapter 3. Applying the developed techniques, equivalent parameters are estimated for three test systems, and the results are included in Chapter 4. In Chapter 5, the dynamic equivalents are first verified by comparing the dynamic interacting effect of the external system on the study system for both original and equivalent systems. The equivalents are further verified by three-phase short-circuits on machine buses of the study system. The dynamic responses of the original systems and the equivalent systems are compared. Conclusions are drawn in Chapter 6 that the dynamic equivalent derived by the technique developed in this thesis is unique, that the estimated equivalent is a good representation of the original external system, and that it can be developed for on-line identification.

TABLE OF CONTENTS

Page

ABSTRACT ii

TABLE OF CONTENTS iii

LIST OF TABLES vii

LIST OF ILLUSTRATIONS viii

ACKNOWLEDGMENT x

NOMENCLATURE xi

1. INTRODUCTION 1

1-1 Dynamic Equivalencing Techniques 2

1-1-1 The Infinite Bus Approach 2

1-1-2 Modal Approach 2

1-1-3 Coherency Approach 3

1-1-4 Identification Approach 4

1-2 A Survey of the Identification Studies 4

1-3 Outline of the Thesis 7

1-4 Definitions of Some Important Terminologies 8

2. A BASIC MULTI-MACHINE POWER SYSTEM 9

2-1 Voltage Equations of Synchronous Machines 9

2-2 Electromechanic Torque Equation of the Synchronous Machine . 13

2-3 A Basic Model for Multi-Machine Power Systems 14

2-3-1 Torque Equation 18

2-3-2 Internal Voltage Equation 19

2-3-3 Terminal Voltage Relation 20

2-3-4 Voltage Regulator and Exciter System 22

2-4 The Complete System Equations 24

2-5 Output or Measurement Equations 24

Page

2-6 Machine Parameters 25

2-7 Models of Reduced Order for the External Equivalent Machines 26

3. IDENTIFICATION TECHNIQUE AND ALGORITHM 29

3-1 Estimation Technique 29

3-1-1 Error Function 29

3-1-2 A Review of Estimation Techniques 30

3-1-3 Convergence Schemes 30

3-2 Algorithm 34

3-3 Computer Simulation of the Dynamic Response of the Original System 36

3-3-1 Load Bus Elimination 36

3-3-2 Intentional Disturbance 37

3-4 Boundary of the Study System and External Equivalent Model . 38

3-4-1 Number of Dynamic Equivalent Machines 38

3-4-2 The Equivalent Machine Model and Number of Parameters 40

3-5 Estimation of Equivalent Machine Voltages 43

4. CASE STUDIED AND RESULTS 46

4-1 Power Systems Data 46

4-1-1 Data of the Five-Machine System 50

4-1-2 Data of the Thirteen-Machine System 51

4-2 Number of Dynamic Equivalent Machines 52

4-3 Choice of the Equivalent Machine Models 53

4-3-1 Selection of the Equivalent Model for Test System 1 . 53

4-3-2 Selection of the Equivalent Model for Test System 2 . 54

4-3-3 Selection of the Equivalent Model for Test System 3 . 56

4-4 Estimated Parameters 56

4-4-1 Cost Function 58

Page

4-4-2 Machine Responses Due to Pulsed Excitation 63

4-5 Parameter Estimation Using Other Machines' Responses 63

4-6 Parameter Estimation with Different Intentional Disturbances 68

4-7 Measurement Noise Effect 71

4-8 Off-Line and On-Line Identification 74

4-9 Conclusions of Chapter 4 79

5. VERIFICATION OF THE VALIDITY OF THE EQUIVALENTS 81

5-1 Model Constants of the Study System 82

5-2 The Electric Torques 87

5-3 Three-Phase Fault Test 88

5-4 Conclusions of Chapter 5 102

6. CONCLUSIONS 103

APPENDIX 105

A1 Self Electric Torque Equations 105

A2 Dynamic Interacting Electric Torque Equations. 107

REFERENCES 111

LIST OF TABLES

Table		Page
2.1	Equivalent models with different order and different number of parameters	28
4.1	General information of the test systems	46
4.2	Machine data of the five machine power system	50
4.3	Machine data of the thirteen machine power system	51
4.4 -4.6	Identified equivalent parameters of test systems 1, 2 and 3, respectively	57-58
4.7	Case studies for parameter identification from other machines' responses	66
4.8 -4.9	Estimated parameters from machine #2 responses of test systems 1 and 2, respectively	66-67
4.10	Estimated parameters from machine #2 and machine #3 responses of test system 3	67
4.11	Parameter identification from the response of test system 1 due to ramp torque disturbance	71
4.12-4.14	Effect of measurement noise on the estimated parameters of test systems 1, 2 and 3, respectively	73-74
4.15	Parameter updating of test system 1	79
5.1 -5.3	Constants of test systems 1, 2 and 3, respectively	86-87
5.4 -5.6	Electric torques of test systems 1, 2 and 3, respectively	89-91
5.7	Three-phase fault tests	92

LIST OF ILLUSTRATIONS

Figure		Page
2.1	Winding representation of the synchronous machine by d and q axes	10
2.2	A synchronous machine phasor diagram	13
2.3	An interconnected system	15
2.4	Voltage regulator and exciter system	22
2.5	The i-th synchronous machine model of a multi-machine power system	22
2.6	A third order model for the dynamic equivalent	26
2.7	A second order model for the dynamic equivalent	27
3.1	Estimation algorithm	35
3.2	The configuration of the dynamic equivalent	39
3.3	Algorithm for the choice of a suitable model for the equivalent machines	41
3.4	The cost function vs. two parameters of a fourth-order twelve-parameter model	42
3.5	The cost function vs. the damping coefficient of a dynamic equivalent machine	42
4.1	Test system 1	47
4.2	Test system 2	48
4.3	Test system 3	49
4.4	Number of the dynamic equivalents	52
4.5	The cost function vs. some parameters of test system 2; a third order five-parameter model	55
4.6 -4.8	Cost function vs. equivalent parameters of test systems 1, 2 and 3, respectively	59-62
4.9 -4.11	Responses of test systems 1, 2 and 3, respectively, due to pulsed excitation voltage	64-65
4.12-4.14	Responses of machine #2 of test systems 1, 2 and 3, respectively	69-70

Figure		Page
4.15	Responses of machine #3 of test system 3	70
4.16	Ramp mechanical torque disturbance	71
4.17	Response of test system 1 due to mechanical torque disturbance	72
4.18-4.20	Responses of test systems 1, 2 and 3, respectively, with noise added to the original system responses	75-76
4.21	Responses of test system 1 after updating the dynamic equivalent	78
5.1	Speed-torque relation	84
5.2	Internal voltage representation	85
5.3 -5.19	Responses of different cases of three-phase fault test . .	93-101
A.1	The mechanical loop of the i-th machine	105
A.2	The electrical loop of the i-th machine	106
A.3	Interaction of the mechanical loop of machine j on machine i	107
A.4	Interaction of the electrical loop of machine j on machine i	109

ACKNOWLEDGMENT

I would like to express my grateful thanks and deepest gratitude to Dr. Yao-nan Yu and M. D. Wvong, supervisors of this project, for their continued interest, encouragement and guidance during the research work of this thesis. The guidance of Dr. Yu during the last year of this study, while Dr. Wvong is on sabatical leave, is gratefully acknowledged.

I am grateful to Dr. M. S. Davies and Mr. A. G. Fowler for their valuable comments and advice during the course of this study.

The reading of the draft by Mr. A. Yan is duly appreciated.

I wish to extend my sincere thanks to Dr. T. H. Lee and Mr. M. Mobarak of the New Brunswick Electric Power Commission for supplying the data used in this study.

Thanks are due to Ms. K. Brindamour for typing this thesis.

The financial support from the University of British Columbia and the National Research Council of Canada are gratefully acknowledged.

I am grateful to my parents and my wife Fatma for their encouragement throughout my graduate program.

NOMENCLATURE

Power System

B	=	Local load susceptance
D	=	Damping factor
E_{fd}	=	Equivalent field voltage
E'_q	=	Internal voltage
G	=	Local load conductance
I	=	Machine current in system coordinates
i	=	Machine current in individual coordinates
KA	=	Voltage regulator gain
M	=	Inertia constant
r	=	Resistance
TA	=	Voltage regulator time constant
T'_{do}	=	Synchronous machine field time constant
V	=	Voltage
x	=	Reactance
ω	=	Per unit speed
ω_o	=	$2\pi f$
ω_n	=	Natural frequency of mechanical mode oscillations
ζ	=	Damping coefficient
P	=	d/dt

Subscripts

b	=	Base values
d,q	=	Individual machine coordinates
D,Q	=	System common coordinates

1. INTRODUCTION

Modern electric power systems are characterized by the growing size and complexity that enormous number of generating units, loads, and transmission lines are included in the system. For example, there are about 300 major electric machines in the North America Northeastern Electric Power System, and also about 300 major electric machines in the WSCC System [1]. The stability study of such large systems is very difficult, if not impossible, because of two major reasons:

1) The time required for the computation is almost prohibitive, very uneconomical if every contingency at all strategic points of such systems are investigated.
2) The exact configuration and parameters of the whole system at any given moment may not be available to local operators because the data acquisition of such systems would be extremely difficult.

In recent years, extensive studies have been directed toward simplifying the representation of the power system, as some parts of the system are replaced by fictitious low order equivalents, or "system equivalencing". In doing so, a power system must be divided into two subsystems:

1) The "Study System" which is of direct interest, and may include all or part of the local power system which may be represented in detail.
2) The "External System" which is interconnected to the study system, its configuration and parameters may not be known to the study system operators. By system equivalencing, the external system may be modelled by a hypothesized structure much simpler than the actual system, but it is also necessary that the equivalent be faithfully

simulating the same interacting effect of the original external system on the study system.

The equivalencing techniques are being used in both steady state and dynamics studies. While the steady state equivalencing techniques have been very well developed and in use [2-5], the dynamic equivalencing techniques remain to be improved.

1-1 Dynamic Equivalencing Techniques

Many dynamic equivalencing techniques have been developed. The prevailing approaches may be summarized as follows:

1-1-1 The Infinite Bus Approach

This is the oldest and simplest approach. Classically, a large external system is represented by an infinite bus of constant voltage and constant frequency. The representation is not accurate, since the dynamic interacting effect of the external system on the study system is completely neglected.

1-1-2 Modal Approach [6-9]

From a complete set of nonlinear differential equations describing the entire system, the system equations are linearized, eigenvalues and eigenvectors are analyzed, the system matrix is diagonalized, and those modes which have negligible effects on the study system are eliminated. The major difficulties in applying the technique are:

1) It requires full knowledge of the whole system which is not necessarily available.
2) It requires long time for computation of the eigenvalues and eigen-

vectors for the diagonalization of a large system matrix.

3) The new variables obtained usually do not correspond to specific variables of the system.

4) Not suitable for on-line application.

1-1-3 Coherency Approach [1, 10-14]

The objective in this approach is also to reduce the order of external system. Major steps are as follows:

a) Identify the coherent groups through extensive transient stability analysis; all units which swing together at the same frequency and at close angles are identified as one group.

b) All generating units of each coherent group are connected to an equivalent bus through ideal complex ratio transformers.

c) Each group is then replaced by one equivalent generating unit by a dynamic aggregation method, including synchronous machines, excitation systems, governor-turbine systems, and power stabilizers.

The merit of the coherency approach is that, in the equivalent model, the same power plant structure with meaningful parameters is retained. However, the technique also has some disadvantages:

1) It requires full knowledge of the entire electric power system.

2) The number of coherent groups is usually very large.

3) The coherent groups may change with the contingency.

4) Heavy computation is required for both transient stability analysis and dynamic aggregation.

5) Due to the long computation time, the on-line application is still difficult.

1-1-4 Identification Approach [15-20]

The identification schemes have been proposed in recent years for the determination of dynamic equivalents of the external systems. Data obtained only from within the study system are used. The approach comprises generally three steps:

a) The external system is represented by a hypothesized structure much simpler than the original.

b) An error function is formulated to compare the equivalent system response with the original system response.

c) An algorithm is developed that the parameters of the hypothesized model are being adjusted while the error function is minimized.

The advantage of the identification approach may be summarized as follows:

1) It requires no information about the external system.

2) The responses used for identification are measured locally.

3) The external system order can be greatly reduced.

4) The computation time can be economized and the on-line application is feasible.

1-2 A Survey of the Identification Studies

The application of identification technique to power systems is not new. Many studies have been made and useful algorithms developed [21-25]. As for the dynamic equivalencing of power systems, important contributions are as follows.

It was Masiello and Schweppe [15] who first provided an algorithm to identify the equivalent external system. Their technique was based on a

hypothesized structure for the external system, and the unknown parameters were identified by using the normal power system fluctuations which were observed within the local system. The paper has addressed the problem in depth, except the choice of the equivalent external system model which was not clear. They recommended that the model chosen by representative for the bandwidth of the dynamic range concerned. According to this suggestion, the equivalent may not be unique; several models with different orders may be representative. In their study, the validity test of the estimated model was not given.

Price et al. [16-17] also used normal fluctuations for the identification. The maximum likelihood estimate is applied to identify the external equivalent parameters. The criterion for convergence is based upon the similarity in magnitudes between the original and equivalent system responses. In their study, not all the unknown parameters can be identified. The likelihood function of one parameter is flat without a well-defined maximum. The adequacy of the equivalent model was not examined and the application of the technique to a 14-generator external system proved unsatisfactory. No validity test of the equivalent system was given.

Ibrahim et al. [18] used an intentional disturbance for the dynamic equivalent identification. A deterministic power system was assumed. The dynamics of the external system were represented by stochastic linear difference equations, and a recursive least-square algorithm was used to estimate the parameters. The model used for the equivalent external system, however, was purely mathematical, not a power system structure with meaningful parameters, and the external equivalent model was found to be dependent on the nature and location of the disturbance.

Giri et al. [19] applied the coherency approach for off-line equivalencing and the identification approach for on-line equivalencing. Due to the coherency approach, a full knowledge of the external system was required and the number of dynamic equivalent machines could be very large.

In an earlier paper by Yu, El-Sharkawi and Wvong [20], the entire external system was represented by one large machine with meaningful parameters. An intentional disturbance was used and a recursive least-squares algorithm was developed for identification of the unknown external equivalent parameters. Although the algorithm was efficient, the example was too simple, and no validity test was given. Moreover, many other problems were not addressed, e.g., the uniqueness of the equivalent model, the application of the estimation technique to a much larger system, etc.

It is rather important to mention that in some of the above studies [15-17], normal fluctuations are used for identification instead of intentional disturbances. The use of these fluctuations, however, draw criticism among power engineers for two major reasons:

1) The normal fluctuations which occur on a power system can be categorized by two broad classes; changes in loads, and hunting among the various generators and loads. The latter is largely a three phase phenomenon and is probably well represented by the given model. But, the load variations which lead to the other type of fluctuations on the power system have a significant single phase component and cannot be represented by a simple model.
2) Stanton [24] had worked on the problem of identifying power system dynamic models from normal operating data. From his experience, he advised against drawing any firm conclusions regarding practical application from the simulated results using normal operating data for

the identification. The collection and processing of the data to identify dynamic equivalents would be extremely difficult in large interconnected systems. Also, the estimated parameters may not provide accurate representation during contingencies with large disturbances.

1-3 Outline of the Thesis

Research on the estimation of dynamic equivalent of electric power systems is continued in this thesis. Taking into consideration the many unsolved problems in previous works, the investigation is outlined as follows:

1) To develop a basic multi-machine power system model for the dynamic studies.
2) To develop an estimation technique and fast convergent algorithm applicable to both noisy and deterministic systems.
3) To develop a technique choosing the equivalent model for the external system.
4) To apply the equivalency technique to different power systems.
5) To test the uniqueness of the identified equivalent external system by changing the location and type of disturbance within the study system, and by using different machine responses of the study system for identification.
6) To verify the dynamic equivalent by comparing the model constants and the damping and synchronizing torques of the study system, before and after dynamic equivalencing.
7) To test the dynamic equivalent for severe contingencies by assuming three phase faults within the study system.

1-4 Definitions of Some Important Terminologies

For convenience, important terminologies used throughout this thesis are defined as follows:

Equivalent External System: refers to the simplified network representing the external system.

Equivalent System: refers to the system composed of the study system and the equivalent external system.

Equivalent Machine: refers to a machine of the equivalent external system.

Equivalent Parameter: refers to a parameter of the equivalent machine model.

Boundary Line: refers to a fictitious line drawn between the study system and the external system.

Boundary Bus: refers to a bus on the boundary line connected to both the study system and the external system.

2. A BASIC MULTI-MACHINE POWER SYSTEM MODEL

An adequate synchronous machine model is required to simulate the dynamic performance of a power system. Moreover, the behaviour of an isolated synchronous machine of a power system is quite different from its behaviour in a multi-machine power system because of the interactions between machines.

In this Chapter, a basic multi-synchronous-machine power system model is developed, for the dynamic studies in general and for the estimation study in particular. The dynamic interactions between the machines are clearly represented, and the contribution of these interactions to the stability of any machine in the system is considered.

2-1 Voltage Equations of Synchronous Machines

In 1928, R.H. Park [26] developed the two reaction theory of the synchronous machine, which has been the basis of the modern electric power system and synchronous machine studies. Modifications are, however, necessary to adapt the general theory to specific applications.

The theory is based on the transformation of armature winding of the synchronous machine on the three phase axes into a two winding equivalent on the direct (d) and quadrature (q) axes, Fig. 2.1, plus a zero-axis winding which is not shown in the figure.

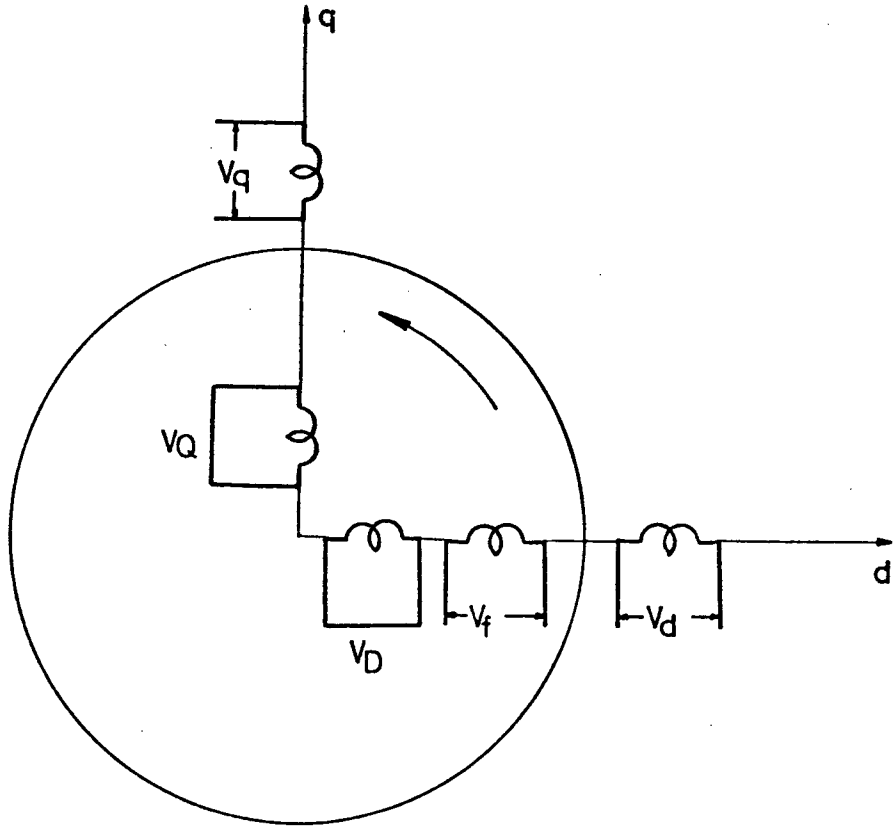

Fig. 2.1

Winding representation of the synchronous machine by d and q axes.

The synchronous generator equations of Fig. 2.1 can be written in the form,

$$V_f = r_f i_f + P\Psi_f$$

$$V_d = -r_a i_d + P\Psi_d - \omega\Psi_q$$

$$V_q = -r_a i_q + P\Psi_q + \omega\Psi_d$$

$$V_D = r_D i_D + P\Psi_D = 0$$

$$V_Q = r_Q i_Q + P\Psi_Q = 0$$

where

$$\begin{bmatrix} \Psi_d \\ \Psi_f \\ \Psi_D \end{bmatrix} = \frac{1}{\omega_o} \begin{bmatrix} x_d & x_{df} & x_{dD} \\ \frac{3}{2} x_{df} & x_f & x_{fD} \\ \frac{3}{2} x_{dD} & x_{fD} & x_D \end{bmatrix} \begin{bmatrix} -i_d \\ i_f \\ i_D \end{bmatrix}$$

and

$$\begin{bmatrix} \Psi_q \\ \Psi_Q \end{bmatrix} = \frac{1}{\omega_o} \begin{bmatrix} x_q & x_{qQ} \\ \frac{3}{2} x_{qQ} & x_Q \end{bmatrix} \begin{bmatrix} -i_q \\ i_Q \end{bmatrix}$$

Some parameters and variables in Park's equation have secondary effects and may be neglected for dynamic studies [27-32]. The following assumptions are usually made:

1) The effect of the damper windings is much smaller than the damping provided by the power system stabilizers, loads, ... etc.
2) The voltages $P\Psi_d$ and $P\Psi_q$ due to the rate of change of the flux linkages in the respective d and q windings are negligible as compared to the rotational voltages $\omega\Psi_d$ and $\omega\Psi_q$.
3) The per unit armature resistance of the large machines is very small as compared to the per unit reactances; the resistance voltage is negligible.

Applying these assumptions, Park's equations for a synchronous generator are reduced to

$$V_f = r_f i_f + P\Psi_f \tag{2.1}$$

$$\begin{aligned} V_d &= -\omega\Psi_q \\ V_q &= \omega\Psi_d \end{aligned} \tag{2.2}$$

$$\Psi_d = (-x_d\, i_d + x_{df}\, i_f)/\omega$$

$$\Psi_q = -x_q\, i_q/\omega \tag{2.3}$$

$$\Psi_f = (x_f\, i_f - \frac{3}{2}\, x_{df}\, i_d)/\omega$$

Substituting the values of Ψ_d and Ψ_q of equations (2.3) into (2.2), yields

$$V_d = x_q\, i_q$$

$$V_q = E - x_d\, i_d \tag{2.4}$$

where

$$E \triangleq x_{df}\, i_f \tag{2.5}$$

or the steady state equivalent field voltage which can be written

$$E = E'_q + (x_d - x'_d)\, i_d \tag{2.6}$$

where

$$E'_q \triangleq \omega\Psi_f\, x_{df}/x_f \tag{2.7}$$

and

$$x'_d \triangleq x_d - \frac{3}{2}\, x_{df}^2/x_f \tag{2.8}$$

From equations (2.4) and (2.6), the quadrature-axis voltage can be written

$$V_q = E'_q - x'_d\, i_d \tag{2.9}$$

Substituting the value of Ψ_f of equation (2.7) into equation (2.1) yields

$$T'_{do}\, PE'_q = E_{fd} - E \tag{2.10}$$

where

$$T'_{do} \triangleq x_f/\omega r_f$$

and (2.11)

$$E_{fd} \triangleq x_{df}\, V_f/r_f$$

Equation (2.10) can be written as a function of E'_q, as follows

$$E'_q + T'_{do}\, PE'_q = E_{fd} - (x_d - x'_d)\, i_d \qquad (2.12)$$

Equations (2.4), (2.9) and (2.12) form the basic voltage equations of synchronous machines. A phasor diagram also can be drawn as Fig. 2.2.

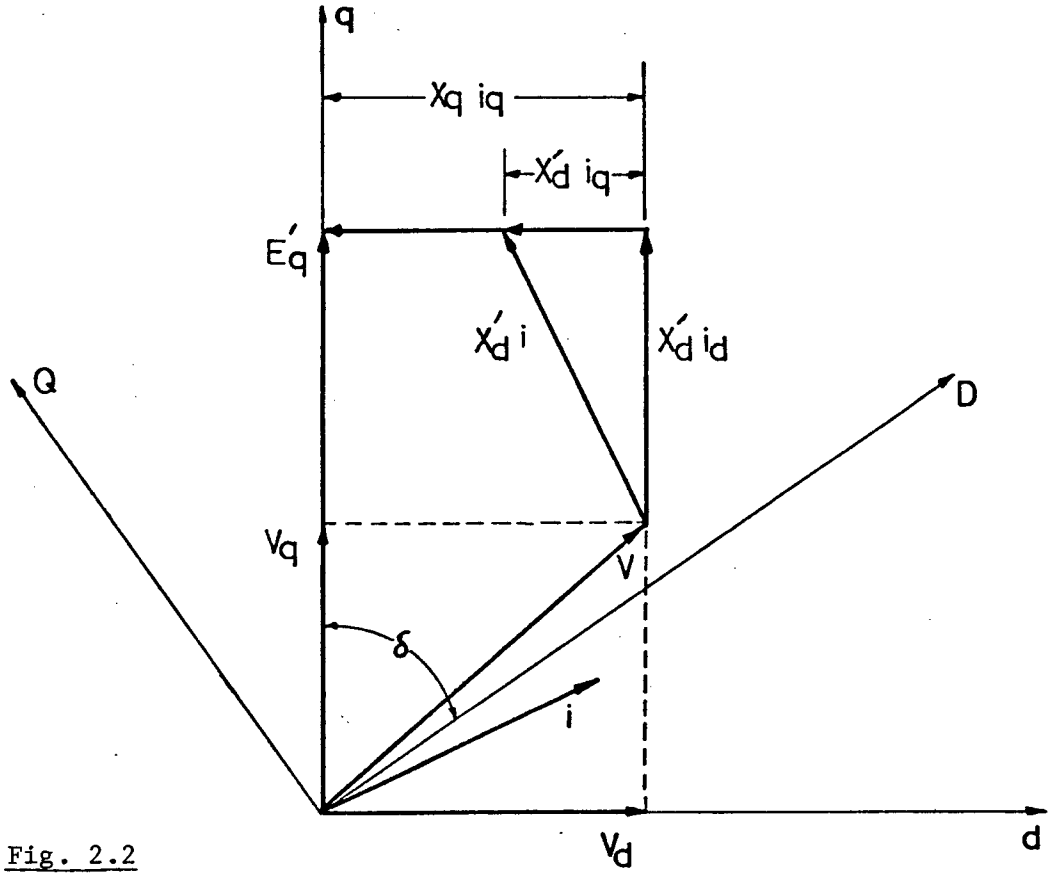

Fig. 2.2

A synchronous machine phasor diagram.

2-2 Electromechanic Torque Equation of the Synchronous Machine

In steady state, the mechanical power input to the generator from the turbine equals the electrical power output plus machine losses. Any change in input or output is a disturbance and would cause energy inequilibrium of the system. During the period of disturbance, the speed of the generating unit changes in relation to the magnitude of the difference

between the mechanic power and electric power, the inertia of the unit, and the damping power of the system.

The general electromechanic torque equation of the synchronous machine may be written

$$M\,P\omega + D\omega = T_m - T_e \tag{2-13}$$

where

$$M \triangleq J\omega_b^2/P_b \tag{2-13a}$$

For small purturbations, this equation can be linearized as follows

$$M\,P\Delta\omega + D\Delta\omega = \Delta T_m - \Delta T_e \tag{2-14}$$

2-3 A Basic Model for Multi-Machine Power Systems

A synchronous machine model for small purturbations was developed by Heffron and Philips [27], and deMello and Concordia [28]. The dynamic interactions between the machines were ignored in the model. These interactions, however, could have large effects on large and small machines in a multi-machine system, especially with strong ties between them. Therefore, a multi-machine power system model including these interactions is required.

Yu et al. [30-31] developed a multi-machine model for non-salient pole synchronous machines for their dynamic interaction studies. The model is suitable for steam-electric units, but may not be accurate enough for hydro-electric units in which the saliency effect may not be negligible.

The basic multi-machine model presented in this thesis has similar outlook like that of reference [30], with the dynamic interactions between machines clearly represented. However, the model in this thesis is suitable for both salient and non-salient pole synchronous machines.

Fig. 2.3 shows the i-th machine in a multi-machine power system. It is connected to the other machine buses by transmission line with impedances Z_{ij}, Z_{ik}, etc., and has a local load with an admittance y_{ii}. Machine currents can be expressed in terms of bus voltages of the system in matrix equation as follows,

$$[\bar{I}] = [\bar{y}_t]\,[\bar{V}] \tag{2.15}$$

where $[\bar{y}_t]$ is an n x n complex symmetric matrix for an n-machine system, and

$$\begin{aligned} \bar{y}_{tii} &= \sum_{j=1}^{n} \bar{y}_{ij} \\ \bar{y}_{tij} &= -\bar{y}_{ij} \end{aligned} \tag{2.15a}$$

The bar refers to a phasor value

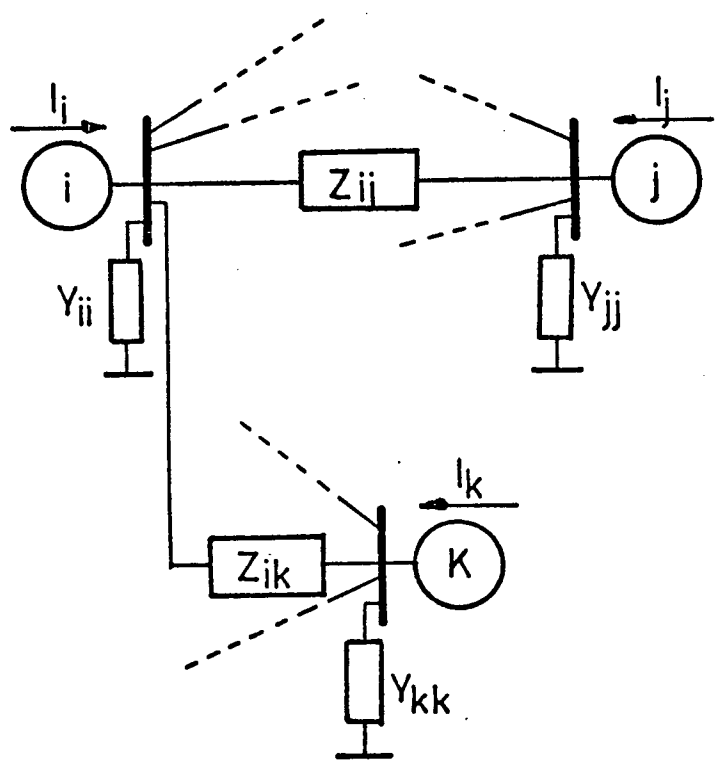

Fig. 2.3 An interconnected system.

Equation (2.15) represents system with all load buses eliminated.

According to Fig. 2.2, the voltage vector $[\bar{V}]$ can be expressed in terms of $[E'_q]$ and machine currents as follows,

$$[\bar{V}] = [E'_q\, e^{j\delta}] - [jx'_d]\,[\bar{I}] - [(x_q - x'_d)\, I_q\, e^{j(\delta+90)}] \tag{2.16}$$

substituting the value of $[\bar{V}]$ from equation (2.16) into equation (2.15), yields

$$[\bar{I}] = [\bar{Y}]\,([E'_q\, e^{j\delta}] - [(x_q - x'_d)\, I_q\, e^{j(\delta+90)}]) \tag{2.17}$$

where

$$\bar{Y} \triangleq ([\bar{y}_t]^{-1} + [jx'_d])^{-1} \tag{2.17a}$$

Referring the individual machine current to its own machine coordinates yields

$$\bar{i}_i = \sum_{j=i}^{n} Y_{ij}\,(E'_{qj}\, e^{j(\beta_{ij}-\delta_{ij}+90)} - (x_{qj}-x'_{dj})\, I_{qj}\, e^{j(\beta_{ij}-\delta_{ij}+180)}) \tag{2.18}$$

where

$$\begin{aligned} \bar{i}_i &= \bar{I}_i\, e^{j(90-\delta_i)} \\ \bar{Y}_{ij} &= Y_{ij}\, e^{j\beta_{ij}} \\ \delta_{ij} &= \delta_i - \delta_j \end{aligned} \tag{2.18a}$$

The direct and quadrature axis components of the i-th machine are

$$\begin{aligned} I_{di} &= \mathrm{Re}\,(\bar{i}_i) = \sum_{j=1}^{n} Y_{ij}\,(-E'_{qj}\, S_{ij} + (x_{qj}-x'_{dj})\, I_{qj}\, C_{ij}) \\ I_{qi} &= \mathrm{Im}\,(\bar{i}_i) = \sum_{j=1}^{n} Y_{ij}\,(E'_{qj}\, C_{ij} + (x_{qj}-x'_{dj})\, I_{qj}\, S_{ij}) \end{aligned} \tag{2.19}$$

where

$$\begin{aligned} C_{ij} &\triangleq \cos\,(\beta_{ij} - \delta_{ij}) \\ S_{ij} &\triangleq \sin\,(\beta_{ij} - \delta_{ij}) \end{aligned} \tag{2.19a}$$

The linearized equations for small oscillations may be written

$$[\Delta I_d] = [Q_d][\Delta E'_q] + [P_d][\Delta\delta] + [M_d][\Delta I_q]$$
$$[L_q][\Delta I_q] = [Q_q][\Delta E'_q] + [P_q][\Delta\delta] \tag{2.20}$$

where

$$Q_{dij} = - Y_{ij} S_{ij}$$

$$P_{dij} \underset{j\neq i}{=} - Y_{ij} (E'_{qj} C_{ij} + (x_{qj}-x'_{dj}) I_{qj} S_{ij})$$

$$P_{dii} = - \sum_{j\neq i} P_{dij}$$

$$M_{dij} = Y_{ij} (x_{qj}-x'_{dj}) C_{ij}$$

$$L_{qij} \underset{j\neq i}{=} - Y_{ij} (x_{qj}-x'_{dj}) S_{ij} \tag{2.20a}$$

$$L_{qii} = 1 - Y_{ii} (x_{qi}-x'_{di}) S_{ii}$$

$$Q_{qij} = Y_{ij} C_{ij}$$

$$P_{qij} \underset{j\neq i}{=} - Y_{ij} (E'_{qj} S_{ij} - (x_{qj} - x'_{dj}) I_{qj} C_{ij})$$

$$P_{qii} = - \sum_{j\neq i} P_{qij}$$

Therefore

$$[\Delta I_q] = [Y_q][\Delta E'_q] + [F_q][\Delta\delta] \tag{2.21}$$

where

$$[Y_q] = [L_q]^{-1}[Q_q]$$
$$[F_q] = [L_q]^{-1}[P_q] \tag{2.21a}$$

and

$$[\Delta I_d] = [Y_d][\Delta E'_q] + [F_d][\Delta\delta] \tag{2.22}$$

where

$$[Y_d] = [Q_d] + [M_d][Y_q]$$
$$[F_d] = [P_d] + [M_d][F_q] \tag{2.22a}$$

2-3-1 Torque Equation

Since the electric power P_e approximately equals the electric torque in per unit,

$$T_{ei} \cong R_e\ (\bar{V}_i\ \bar{i}_i^*)$$
$$= E'_{qi}\ I_{qi} + (X_{qi}-x'_{di})\ I_{di}\ I_{qi} \tag{2.23}$$

The linearized torque equation becomes

$$[\Delta T_e] = [S][\Delta E'_q] + [T][\Delta I_d] + [0][\Delta I_q] \tag{2.24}$$

where [S], [T] and [0] are diagonal matrices, and

$$S_{ii} = I_{qi}$$
$$T_{ii} = (x_{qi}-x'_{di})\ I_{qi} \tag{2.24a}$$
$$0_{ii} = E'_{qi} + (x_{qi}-x'_{di})\ I_{di}$$

Substituting the value of $[\Delta I_q]$ and $[\Delta I_d]$ from equations (2.21) and (2.22), respectively, into equation (2.24) gives

$$[\Delta T_e] = [K1][\Delta\delta] + [K2][\Delta E'_q] \tag{2.25}$$

where

$$[K1] = [T][F_d] + [0][F_q]$$
$$[K2] = [T][Y_d] + [0][Y_q] + [S] \tag{2.25a}$$

[K1] and [K2] are not symmetrical matrices.

2-3-2 Internal Voltage Equation

Linearization of the internal voltage equation (2.10) gives

$$[W][\Delta E'_q] = [\Delta E_{fd}] - [XD][\Delta I_d] \tag{2.26}$$

where [W] and [XD] are diagonal matrices; e.g.

$$W_{ii} = 1 + S\ T'_{doi}\ ,$$

and

$$XD_{ii} = x_{di} - x'_{di}$$

S is for the Laplace transformation.

Substituting the value of $[I_d]$ from (2.22) into equation (2.26) gives

$$[J][\Delta E'_q] = [\Delta E_{fd}] - [K4][\Delta\delta] \tag{2.27}$$

where

$$[J] = [W] + [XD][Y_d] \tag{2.27a}$$

[J] can be partitioned into two matrices

$$[J] = [f(\frac{1}{K3})] + [g(\frac{1}{K3})] \tag{2.27b}$$

where

$$\begin{aligned} f_{ii}\ (\frac{1}{K3}) &= (1 + S\ T'_{doi} K3_{ii})/K3_{ii} \\ g_{ij}\ (\frac{1}{K3}) &= 1/K3_{ij} \end{aligned} \tag{2.27c}$$

$$\begin{aligned} K3_{ii} &\triangleq (1 + (x_{di} - x'_{di})\ Y_{dii})^{-1} \\ K3_{ij} &\triangleq ((x_{di} - x'_{di})\ Y_{dij})^{-1} \end{aligned} \tag{2.27d}$$

$[f(\frac{1}{K3})]$ is a diagonal matrix representing the effect of $\Delta E'_q$ of individual machines, and $[g(\frac{1}{K3})]$ is a matrix with zero diagonal elements representing the dynamic interacting effect of $\Delta E'_q$ of other machines.

Equation (2.27) can be written

$$[\Delta E'_q] = [f(\frac{1}{K3})]^{-1} ([\Delta E_{fd}]-[g(\frac{1}{K3})][\Delta E'_q]-[K4][\Delta\delta]) \qquad (2.28)$$

[K3] and [K4] are not symmetrical matrices.

2-3-3 Terminal Voltage Relation

The terminal voltage may be expressed by its d and q components

$$V_{ti}^2 = V_{di}^2 + V_{qi}^2 \qquad (2.29)$$

where

$$\bar{V}_{ti} = V_{di} + j\, V_{qi} \qquad (2.29a)$$

Linearization of (2.4) gives

$$\begin{aligned} [\Delta V_d] &= [X_q][\Delta I_d] \\ [\Delta V_q] &= [\Delta E'_q] - [X'_d][\Delta I_d] \end{aligned} \qquad (2.30)$$

where $[X_q]$ and $[X'_d]$ are diagonal matrices. Linearization of equation (2.29) and substitution of $[\Delta V_d]$, $[\Delta V_q]$ and $[\Delta I_d]$ into (2.29) yields

$$[\Delta V] = [K5][\Delta\delta] + [K6][\Delta E'_q] \qquad (2.31)$$

where

$$\begin{aligned} [K5] &= [V_D][X_q][f_q] - [V_Q][X'_d][F_d] \\ [K6] &= [V_D][X_q][Y_q] + [V_Q](I-[X'_d][Y_d]) \end{aligned} \qquad (2.31a)$$

$[V_D]$ and $[V_Q]$ are diagonal matrices where

$$\begin{aligned} V_{Dii} &= V_{di}/V_i \\ V_{Qii} &= V_{qi}/V_i \end{aligned} \qquad (2.31b)$$

[K5] and [K6] are not symmetrical matrices.

The expressions of these constants in terms of the machine parameters and steady state values are summarized as follows:

$$K1_{ij} \underset{j=1,\ldots i,\ldots n}{=} (E'_{qi} + (x_{qi} - x'_{di})\, I_{di})\, F_{qij} + ((x_{qi} - x'_{di})\, I_{qi})\, F_{dij}$$

$$K2_{ii} = I_{qi} + (E'_{qi} + (x_{qi} - x'_{di})\, I_{di})\, Y_{qii} + ((x_{qi} - x'_{di})\, I_{qi})\, Y_{dii}$$

$$K2_{ij} \underset{j\neq i}{=} (E'_{qi} + (x_{qi} - x'_{di})\, I_{di})\, Y_{qij} + ((x_{qi} - x'_{di})\, I_{qi})\, Y_{dij}$$

$$K3_{ii} = (1 - (x_{di} - x'_{di})\, Y_{dii})^{-1}$$

$$K3_{ij} \underset{j\neq i}{=} ((x_{di} - x'_{di})\, Y_{dij})^{-1}$$

$$K4_{ij} \underset{i=1,\ldots i,\ldots n}{=} (x_{di} - x'_{di})\, F_{dij} \tag{2.32}$$

$$K5_{ij} \underset{i=1,\ldots i,\ldots n}{=} (V_{di}\, x_{qi}\, F_{qij} - V_{qi}\, x'_{di}\, F_{dij})/V_i$$

$$K6_{ii} = (V_{di}\, x_{qi}\, Y_{qii} + V_{qi}\, (1 - x'_{di}\, Y_{dii}))/V_i$$

$$K6_{ij} \underset{j\neq i}{=} (V_{di}\, x_{qi}\, Y_{qij} - V_{qi}\, x'_{di}\, Y_{dij})/V_i$$

where F_q, F_d, Y_q and Y_d are given by equations (2.21a) and (2.22a).

2-3-4 Voltage Regulator and Exciter System

A voltage regulator and exciter system is shown in block diagram as Fig. 2.4

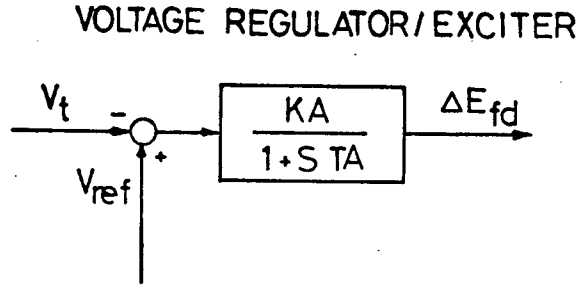

Fig. 2.4 Voltage regulator and exciter system.

A solid state exciter with negligible time constant is assumed so that ΔE_{fd} can be expressed by a first order differential equation.

$$\Delta V_{ti} = -(1 + S\ TA_i)\ \ \Delta E_{fdi}/KA_i \tag{2.33}$$

Equations (2.14), (2.25), (2.28), (2.31) and (2.33) form the i-th machine model of a multi-machine power system. The corresponding block diagram is shown in Fig. 2.5.

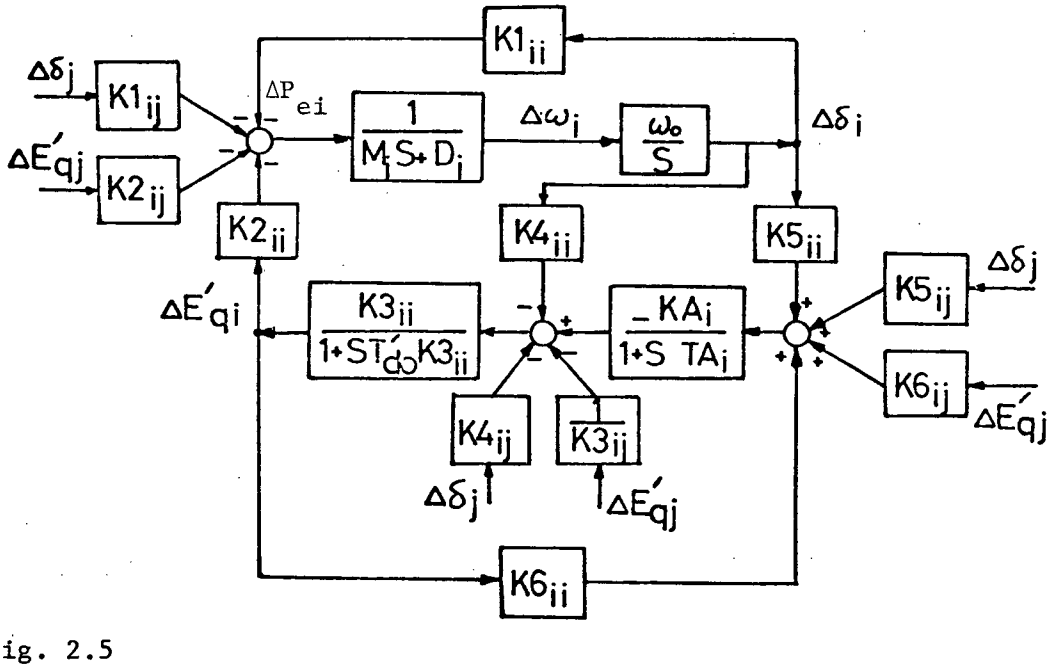

Fig. 2.5

The i-th synchronous machine model of a multi-machine power system.

The dynamic interaction effects of other machines on the i-th machine due to their angle and voltage changes are explicitly expressed. Every machine is affected by other machines in the system. However, the magnitude of the effect depends upon $\Delta\delta_j$ and $\Delta E'_{qj}$ of other machines and the coupling gains $K1_{ij}$, ---, $K6_{ij}$ which, in turn, depend upon the steady state operation and the configuration of the system. For example, the stronger the tie between machines, the larger is the dynamic interaction.

2-4 The Complete System Equations

In preceding analysis, each machine is represented by a fourth order model with the state variables $\Delta\delta_i$, $\Delta\omega_i$, $\Delta E'_{qi}$ and ΔE_{fdi}. Therefore, the complete system equations of the power system including all machines and interties can be expressed in the matrix form

$$[\dot{X}] = [A][X] + [D]\, d \tag{2.34}$$

where

$$[X] = [\Delta\delta_1, ---, \Delta\delta_n, \Delta\omega_1, ---, \Delta\omega_n, \Delta E'_{q1}, ---, \Delta E'_{qn}, \Delta E_{fd1}, ---, \Delta E_{fdn}]^T \tag{2.34a}$$

d is a disturbance scalar, and [D] is the disturbance input vector. The system matrix A is given in equation (2.35).

2-5 Output or Measurement Equations

The output of the system can be expressed by

$$[y] = [H][X] \tag{2.36}$$

where [y] is an output vector which contains measureable variables such as powers, voltages, frequencies, currents, --- etc. In the study of this

$$
A = \begin{array}{c|cccccccccccc}
 & \Delta\delta_1 & \cdots & \Delta\delta_N & \Delta\omega_1 & \cdots & \Delta\omega_N & \Delta E'_{q1} & \cdots & \Delta E'_{qN} & \Delta E_{fd1} & \cdots & \Delta E_{fdN} \\
\hline
\Delta\delta_1 & 0 & 0 & 0 & 377 & 0 & 0 & 0 & 0 & 0 & 0 & 0 & 0 \\
\vdots & 0 & 0 & 0 & 0 & \ddots & 0 & 0 & 0 & 0 & 0 & 0 & 0 \\
\Delta\delta_N & 0 & 0 & 0 & 0 & 0 & 377 & 0 & 0 & 0 & 0 & 0 & 0 \\
\Delta\omega_1 & \frac{-K1_{11}}{M_1} & \cdots & \frac{-K1_{1N}}{M_1} & \frac{-D_1}{M_1} & 0 & 0 & \frac{-K2_{11}}{M_1} & \cdots & \frac{-K2_{1N}}{M_1} & 0 & 0 & 0 \\
\vdots & \vdots & \vdots & \vdots & 0 & \ddots & 0 & \vdots & \vdots & \vdots & 0 & 0 & 0 \\
\Delta\omega_N & \frac{-K1_{N1}}{M_N} & \cdots & \frac{-K1_{NN}}{M_N} & 0 & 0 & \frac{-D_N}{M_N} & \frac{-K2_{N1}}{M_N} & \cdots & \frac{-K2_{NN}}{M_N} & 0 & 0 & 0 \\
\Delta E'_{q1} & \frac{-K4_{11}}{T'_{do1}} & \cdots & \frac{-K4_{1N}}{T'_{do1}} & 0 & 0 & 0 & \frac{-1}{T'_{do1}K3_{11}} & \cdots & \frac{-1}{T'_{do1}K3_{1N}} & \frac{1}{T'_{do1}} & 0 & 0 \\
\vdots & \vdots & \vdots & \vdots & 0 & 0 & 0 & \vdots & \vdots & \vdots & 0 & \ddots & 0 \\
\Delta E'_{qN} & \frac{-K4_{N1}}{T'_{doN}} & \cdots & \frac{-K4_{NN}}{T'_{doN}} & 0 & 0 & 0 & \frac{-1}{T'_{doN}K3_{N1}} & \cdots & \frac{-1}{T'_{doN}K3_{NN}} & 0 & 0 & \frac{1}{T'_{doN}} \\
\Delta E_{fd1} & \frac{-KA_1}{TA_1}K5_{11} & \cdots & \frac{-KA_1}{TA_1}K5_{1N} & 0 & 0 & 0 & \frac{-KA_1}{TA_1}K6_{11} & \cdots & \frac{-KA_1}{TA_1}K6_{1N} & \frac{-1}{TA_1} & 0 & 0 \\
\vdots & \vdots & \vdots & \vdots & 0 & 0 & 0 & \vdots & \vdots & \vdots & 0 & \ddots & 0 \\
\Delta E_{fdN} & \frac{-KA_N}{TA_N}K5_{N1} & \cdots & \frac{-KA_N}{TA_N}K5_{NN} & 0 & 0 & 0 & \frac{-KA_N}{TA_N}K6_{N1} & \cdots & \frac{-KA_N}{TA_N}K6_{NN} & 0 & 0 & \frac{-1}{TA_N}
\end{array}
\qquad (2.35)
$$

thesis, the speed change $\Delta\omega$ (which is related to the frequency), the active power change ΔP_e, and the terminal voltage change ΔV_t are included in the output vector. Other measurements, such as reactive powers, currents, etc., also can be included if required.

From the block diagram of Fig. 2.5, the measurements of machine #1 can be expressed as follows,

$$\begin{bmatrix} \Delta\omega_1 \\ \\ \Delta P_{e1} \\ \\ \Delta V_{t1} \end{bmatrix} = \left[\begin{array}{ccc|ccc|ccc|ccc} 0 & --- & 0 & 1 & 0 --- & 0 & 0 & --- & 0 & 0 & --- & 0 \\ & & & & & & & & & & & \\ K1_{11} & --- & K1_{1n} & 0 & --- & 0 & K2_{11} & --- & K2_{1n} & 0 & --- & 0 \\ & & & & & & & & & & & \\ K5_{11} & --- & K5_{1n} & 0 & --- & 0 & K6_{11} & --- & K6_{1n} & 0 & --- & 0 \end{array}\right] \begin{bmatrix} \Delta\delta_1 \\ \vdots \\ \Delta\delta_n \\ \hline \Delta\omega_1 \\ \vdots \\ \Delta\omega_n \\ \hline \Delta E'_{q1} \\ \vdots \\ \Delta E'_{qn} \\ \hline \Delta E_{fd1} \\ \vdots \\ \Delta E_{fdn} \end{bmatrix} \tag{2-37}$$

2-6 Machine Parameters

Every machine model requires the following machine parameters,

1) Synchronous machine inductances x_d, x_q and x'_d
2) Inertia constant M
3) Damping coefficient ζ
4) Field open circuit time constant T'_{do}
5) Voltage regulator gain KA and time constant TA

and the following network parameters

6) Local load conductance G and suseptance B

7) Intertie resistance R and reactance X

2-7 Models of Reduced Order for the External Equivalent Machines

For the dynamic equivalencing, the external system is usually represented by a much smaller number of machines than the original, and by a reduced-order model with less number of parameters for the external equivalent machine if it is proved satisfactory. Two examples are shown below: a third order model is obtained by assuming a constant field voltage E_{fd}, Fig. 2.6, and a second order model by assuming a constant quadrature axis internal voltage E'_q, Fig. 2.7.

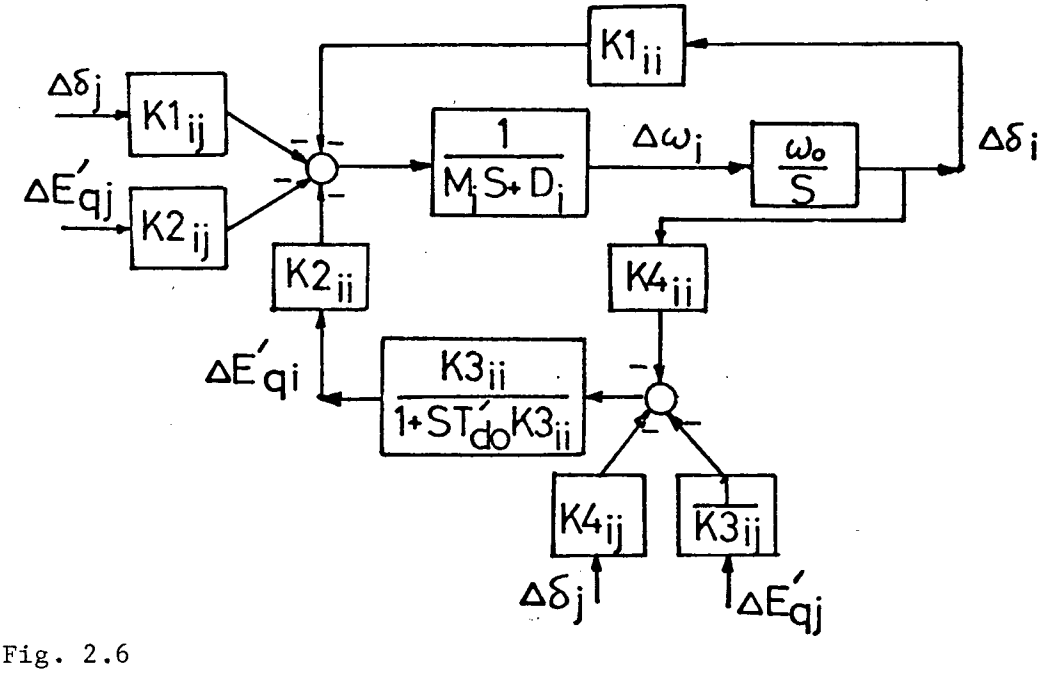

Fig. 2.6

A third order model for the dynamic equivalent.

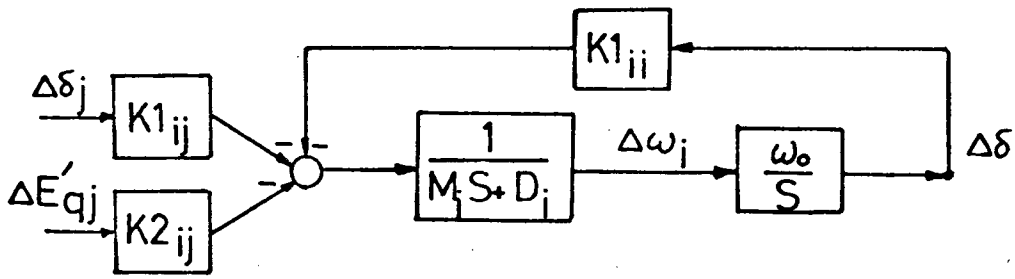

Fig. 2.7 A second order model for the dynamic equivalent.

The number of parameters can also be reduced if it is proved satisfactory. General considerations of the equivalent model reduction are as follows:

1) R and X of the tie line of the equivalent machine can be eliminated if a direct connection of the equivalent machine to the boundary bus is assumed.

2) G and B of the local load of the equivalent machine bus can be eliminated and the effect usually is included in the machine equivalent model itself.

3) A cylindrical rotor machine may be assumed for the equivalent machine, $x_q = x_d$; the saliency effect is usually not noticeable.

4) KA and TA may be omitted resulting in the third-order model, if the voltage regulator effect is not noticeable.

5) KA, TA, T'_{do} and x_d may all be neglected if the excitation system effect and armature reaction are not noticeable, resulting in a second-order model with a constant quadrature axis internal voltage.

Table 2.1 Equivalent models with different order and different number of parameters.

MODEL ORDER	STATE VARIABLES	NUMBER OF PARAMETERS	R	X	G	B	x'_d	x_d	x_q	M	ζ	T'_{do}	KA	TA
Full Fourth-order	$\Delta\delta$, $\Delta\omega$, $\Delta E'_q$, ΔE_{fd}	12	*	*	*	*	*	*	*	*	*	*	*	*
Third-order	$\Delta\delta$, $\Delta\omega$, $\Delta E'_q$	7			*	*	*	*		*	*	*		
Third-order	$\Delta\delta$, $\Delta\omega$, $\Delta E'_q$	5					*	*		*	*	*		
Second-order	$\Delta\delta$, $\Delta\omega$	3					*			*	*			

3. IDENTIFICATION TECHNIQUE AND ALGORITHM

3-1 Estimation Technique

The main objective of this study is to find the dynamic equivalents for an external system through identification. The equivalent is represented by a model of unknown parameters. The first step is to find a most suitable model for the equivalencing, and the second step is to minimize the errors of the equivalent system responses during identification as compared with the pre-recorded original system responses for the same disturbance. Many estimation techniques are available [37-41]. The technique, however, is preferred to be simple, unbiased, reliable and economical in computation.

3-1-1 Error Function

The equations describing the dynamic equivalent system are expressed similar to those of the original system, equations (2.34) and (2.36), but with a simplified structure and less parameters.

$$\dot{\tilde{x}}(\alpha) = \tilde{A}(\alpha)\,\tilde{x}(\alpha) + Dd \tag{3.1}$$

$$\tilde{y}(\alpha) = \tilde{H}(\alpha)\,\tilde{x}(\alpha) \tag{3.2}$$

Where $\tilde{y}(\alpha)$ represents the responses of the dynamic equivalent system for the same disturbance d of the original system. $\tilde{x}$, $\tilde{y}$, $\tilde{A}$ and $\tilde{H}$ are all functions of α, the equivalent system parameter vector to be identified. Therefore, an error function may be defined by

$$e(\alpha) \triangleq y - \tilde{y}(\alpha) \tag{3.3}$$

where y represents the responses of the original system, which are directly measureable.

3-1-2 A Review of Estimation Techniques

Motivated by todays' high-speed digital computers, modern sequential-processing approach is applied to the estimation. Two techniques will be briefly reviewed, the generalized least-squares estimation and the Markov (unbiased minimum-variance) estimation.

The generalized weighted least-squares estimation can be used for the deterministic system. From the error function given by (3.3), which is a non-linear function of the parameter vector α, a cost function of the quadratic form may be chosen

$$J(\alpha) = \frac{1}{2} \int_{t_o}^{t_f} e'(\alpha)\ W\ e(\alpha)\ dt \tag{3.4}$$

where W is a diagonal positive definite weighting matrix, and its elements are chosen that the responses in smaller magnitudes be given larger weighting factors.

The unbiased minimum-variance estimation is suitable to systems with measurement noise and with the noise covariance known a-priori. This is a special case of the generalized least-squares estimate, where W equals R^{-1}, and R is a positive definite matrix representing the white measurement noise covariance.

3-1-3 Convergence Schemes

To guarantee the convergency with minimum computational requirement and reasonable time, the most popular techniques used in power engineering are based on the gradient methods, especially Newton's methods or steepest-descent.

Taylor expansion of cost function or error function is used in Newton-Raphson and Gauss-Newton methods. The parameter updating scheme is in the form of

$$\alpha = \alpha_0 - J_{\alpha\alpha}^{-1} J_\alpha \tag{3.5}$$

where J_α is the gradient of J, and $J_{\alpha\alpha}$ is the second derivative of J. Since

$$J(\alpha) = \frac{1}{2} \int_{t_o}^{t_f} [(y-\tilde{y}(\alpha))' \, W \, (y-\tilde{y}(\alpha))] \, dt$$

then

$$J_\alpha = - \int_{t_o}^{t_f} [\tilde{y}'_\alpha \, W \, (y-\tilde{y}(\alpha))] \, dt$$

and

$$J_{\alpha\alpha} = \int_{t_o}^{t_f} [\tilde{y}'_\alpha \, W \, \tilde{y}_\alpha] \, dt - \int_{t_o}^{t_f} [\tilde{y}'_{\alpha\alpha} \, W \, (y-\tilde{y}(\alpha))] \, dt \tag{3.6}$$

The difference between Newton-Raphson and Gauss-Newton methods is that the latter neglect the second term of equation (3.6).

The computation of the second derivative $J_{\alpha\alpha}$ and its inverse $J_{\alpha\alpha}^{-1}$ are time consuming especially for large systems with a large number of parameters to be estimated. Moreover, the convergence is not guaranteed and an adjustable step size k may be necessary,

$$\alpha = \alpha_0 - k \, J_{\alpha\alpha}^{-1} J_\alpha \tag{3.7}$$

and the value of k cannot be easily chosen.

The steepest descent method adjusts the parameter vector α according to the scheme

$$\alpha = \alpha_0 - K \, J_\alpha \tag{3.8}$$

where K is a diagonal matrix. Depending on the chosen value of K, the convergency may be slow but smooth, or fast but oscillatory. Moreover, the estimate may diverge for the large values of K. Since the convergency becomes slower and slower when the optimum is approached due to the small value of J_α, K must increase as J_α decreases, but must be constrained to prevent any divergency of the estimated parameters.

The steepest descent with step-size control is also based on the algorithm

$$\alpha = \alpha_0 + \delta\alpha$$

where

$$\delta\alpha = - K J_\alpha \tag{3.9}$$

But to guarantee a fast convergency without divergence, the step-size is constrained by

$$g = (\delta\alpha)' G (\delta\alpha) - C^2 \tag{3.10}$$

where

$$g = 0 \tag{3.10a}$$

G is a positive definite diagonal weighting matrix, and C is a constraint value which will not allow the step-size becoming too large that the estimate diverges or too small to slow the convergence.

Introducing a Lagrange multiplier v, the cost function and the constraint equations can be combined in one equation

$$J^*(\alpha) = J(\alpha) + v\, g \tag{3.11}$$

and

$$J^*_\alpha = J_\alpha + v\, g_\alpha = 0$$

resulting

$$J_\alpha = - 2\, v\, G\, (\delta\alpha) \tag{3.12}$$

Substituting $\delta\alpha$ of equation (3.9) into (3.12) gives

$$K = \left(\frac{1}{2v}\right) G^{-1} \tag{3.13}$$

and

$$\delta\alpha = \left(-\frac{1}{2v}\right) G^{-1} J_{\alpha}$$

Solving equation (3.10) yields

$$\frac{1}{2v} = C \left[J'_{\alpha} G^{-1} J_{\alpha}\right]^{-\frac{1}{2}} \tag{3.14}$$

Substituting the value of $\left(\frac{1}{2v}\right)$ of equation (3.14) into (3.13) gives the solution of K

$$K = C \left[J'_{\alpha} G^{-1} J_{\alpha}\right]^{-\frac{1}{2}} G^{-1} \tag{3.15}$$

Among these techniques, the steepest descent with step-size control is found superior to the others for the following reasons:

1) It does not require the calculation of the Hessian matrix $J_{\alpha\alpha}$ and its inverse $J^{-1}_{\alpha\alpha}$.
2) The step-size is automatically adjusted at each step after the constraint value C has been chosen.
3) A different step-size can be chosen for each parameter by adjusting the weighting matrix G. This is especially helpful if the cost function is more sensitive to some parameters than others.

For the above reasons, the steepest descent with automatic step-size control is used in this thesis study. The value of the step-size constraint C also may be chosen according to the cost function behaviour during identification process. C is reduced whenever the cost function tends to diverge and vise versa.

3-2 Algorithm

An algorithm to estimate the dynamic equivalent of the external system is shown in Fig. 3.1, which consists of the following major steps:

1) Computer simulation of the dynamic response of the i-th machine of the study system in the original system when an intentional disturbance is applied to the same machine. The simulation is an alternative to actual measurements of a real power system, which are not available in this study.
2) The selection of the boundary of the study system and the external equivalent model, including the number of equivalent machines, type of models and number of parameters.
3) Computer simulation of the dynamic response of the i-th machine of the equivalent system for the same intentional disturbance.
4) Calculation and minimization of the cost function and sequentially updating the parameter vector α which has been discussed in the last section.

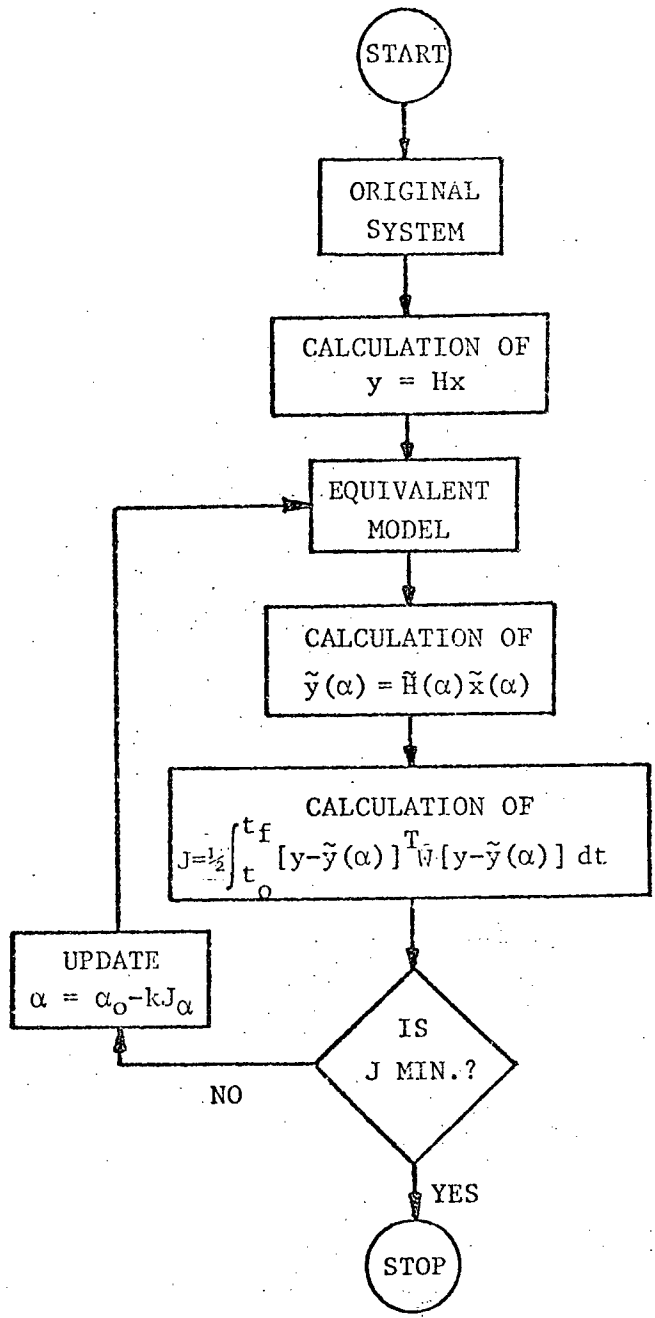

Fig. 3.1 Estimation algorithm

3-3 Computer Simulation of the Dynamic Response of the Original System

The original system equations are generally written

$$\dot{x} = Ax + D\,d \tag{3.16}$$

$$y = Hx + v \tag{3.17}$$

where x is the state variable vector, d the disturbance, y the response vector, v a white measurement noise of covariance R, and A, D, and H matrices can be calculated based on the information of Chapter 2. These matrices are functions of the system initial steady state values calculated from a load flow study [42].

After the disturbance d is chosen, the differential equation (3.16) can be integrated numerically. The response y of the i-th machine is computed and stored for consecutive intervals of time. The measurement noise v can be added afterwards if desired.

For the simulation of the dynamic response of the original system due to an intentional disturbance, considerations must be given to

1) load bus elimination
2) intentional disturbance.

3-3-1 Load Bus Elimination

Equations (3.16) and (3.17) are written for an n-machine system with the load buses eliminated. The elimination of load buses will not change the initial steady state values of the machines, since the sum of input and output currents at each load bus equal zero. Constant impedance load buses are assumed.

Assume a power system of an n machine bus and an m load bus. The current equation may be written

$$\begin{bmatrix} I_1 \\ 0 \end{bmatrix} = \begin{bmatrix} y_{11} & y_{12} \\ y_{21} & y_{22} \end{bmatrix} \begin{bmatrix} V_1 \\ V_2 \end{bmatrix} \tag{3.18}$$

where V_1 and I_1, respectively, are the voltage vector and current vector of the machines, both of order n. V_2 is an m vector of load bus voltages. The partitioned matrices y_{11}, y_{12}, y_{21} and y_{22} represent the admittances of the system, therefore

$$[I_1] = [\bar{y}_{11}]\ [V_1] \tag{3.19}$$

where

$$\bar{y}_{11} = y_{11} - y_{12}\ y_{22}^{-1}\ y_{21} \tag{3.20}$$

The elimination of the load buses will not change the values of the currents $[I_1]$ or the steady state values of the machines, but does change the transmission system.

3-3-2 Intentional Disturbance

To intensify the dynamic interacting effect of the external system on the study system for parameter identification, an intentional disturbance d is necessary. The disturbance could be mechanical or electrical. The mechanical disturbance, e.g. a change in power output of the turbine for a certain period of time, is rather inconvenient to apply. On the other hand, the electrical disturbance is easy to control and the time constant is small. Therefore, a pulsed excitation voltage of certain magnitude and duration within the power system voltage regulation limit is chosen for this thesis study.

3-4 Boundary of the Study System and External Equivalent Model

The boundary line which separates the study system and the external system can be drawn in a number of ways for the dynamic equivalent study. The number of equivalent machines depends upon the choice of the boundary line. The order and the number of parameters of the external equivalent machine model are chosen so that the identified parameters will be unique and the cost function minimum.

3-4-1 Number of Dynamic Equivalent Machines

The boundary line determines the number of dynamic equivalent machines of the external system. The retained buses at the boundary line, or the "boundary buses", are connected to both sides, the study system and the external system, as shown in Fig. 3.2(a). Each boundary bus of the equivalent system is connected to one external equivalent machine as shown in Fig. 3.2(b).

The boundary line may be drawn from geographic or other considerations, but all parameters of the study system must be known.

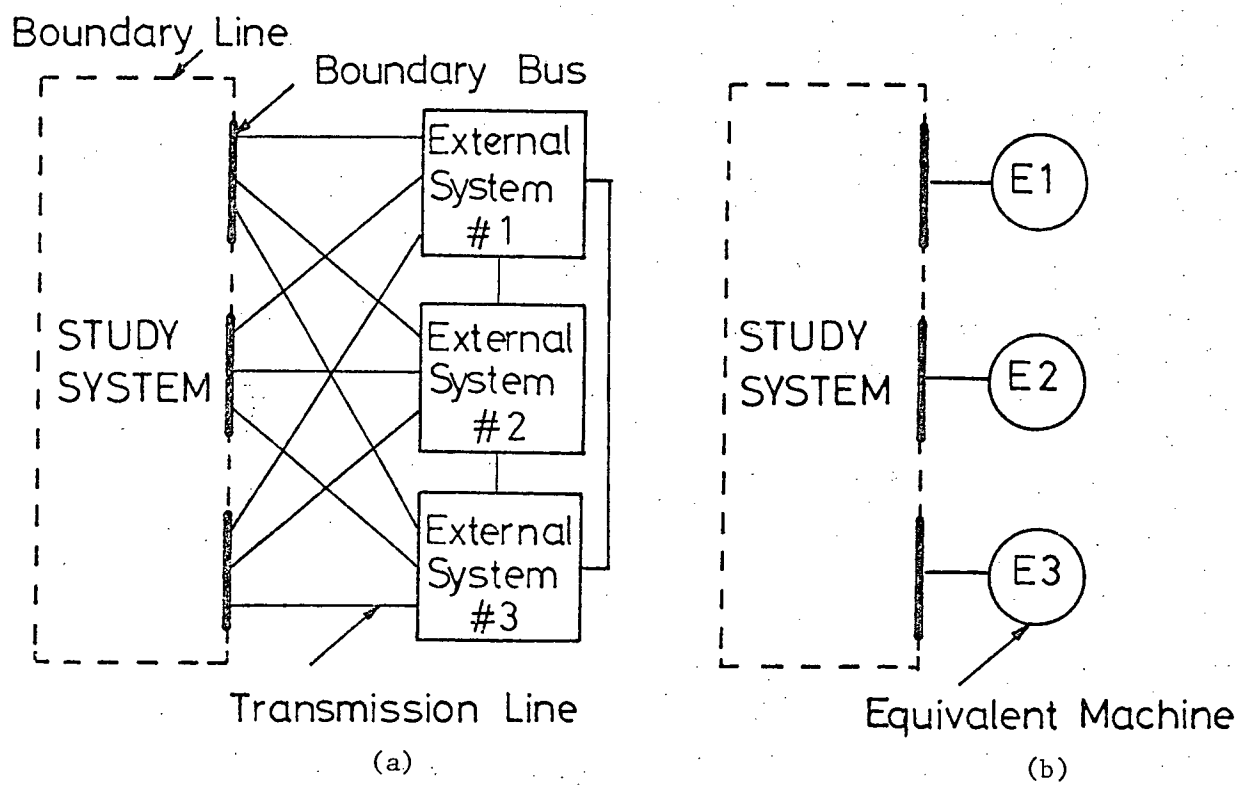

Fig. 3.2 The configuration of the dynamic equivalent
(a) the original system, (b) the dynamic equivalent system.

3-4-2 The Equivalent Machine Model and Number of Parameters

To obtain unique dynamic equivalents for the external system, a suitable model with an adequate number of parameters for the equivalent must be chosen. An over-represented high-order equivalent model with too many parameters will not give unique estimated parameter values. In this thesis study, equivalent models of different orders with different number of parameters are listed in Table 2.1, Section 2-7. They are listed in the order that less important parameters may be removed first, and more important and meaningful parameters for the dynamic studies are to remain.

Fig. 3.3 shows an algorithm of the reduction process. A full-order equivalent model may be assumed in the beginning. The variation of the cost function J with respect to all equivalent parameter variations are then examined. If the cost function is insensitive to some parameters, enter the reduction loop and use the next lower-order model and/or fewer-parameter for the equivalent model until the cost function J becomes sensitive to all remaining parameters. The next step is to identify these parameters for different initial guesses. The results should be unique. If not, another model reduction is necessary. Once unique results are obtained, an additional model reduction may not affect the uniqueness, but the cost function may not be minimum.

Fig. 3.4 shows the variation of the cost function with wide variation of two parameters in a study. In this particular study, a fourth-order twelve-parameter equivalent machine model was assumed to begin with. The cost function was sensitive to the transmission line resistance R, but insensitive to the voltage regulator time constant TA. The model reduction process was carried out until the cost function was sensitive to all

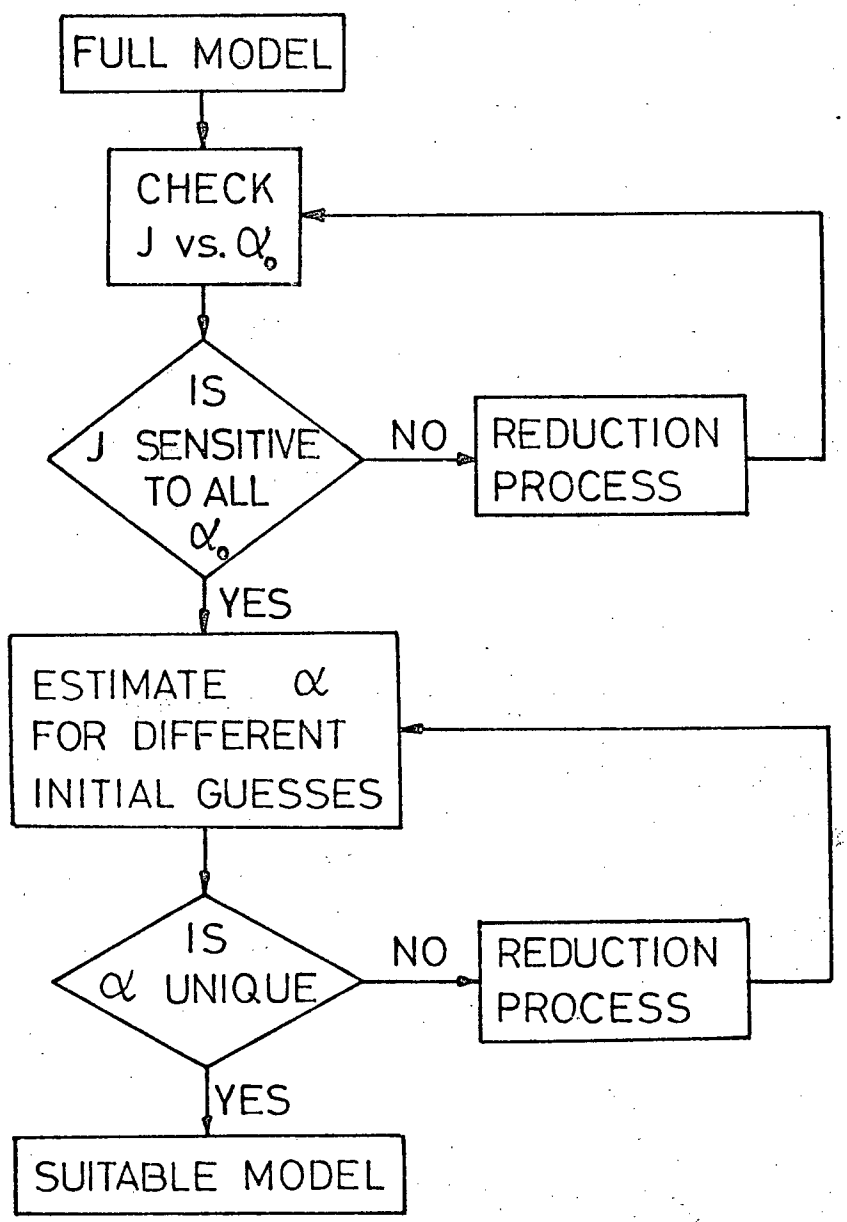

Fig. 3.3 Algorithm for the choice of a suitable model for the equivalent machines.

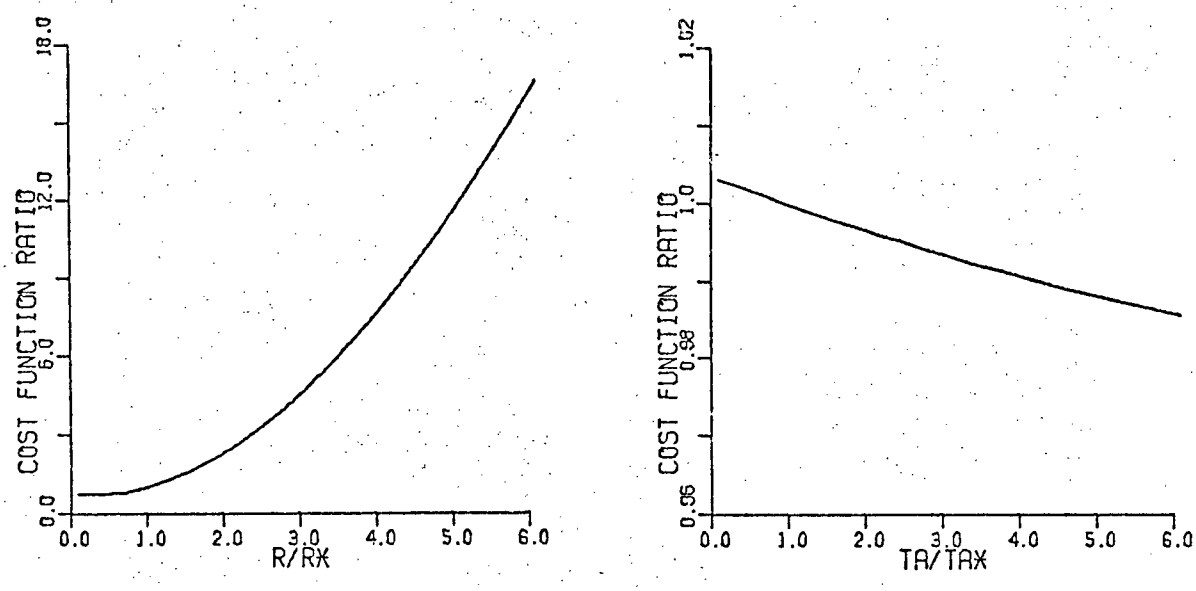

Fig. 3.4 The cost function vs. two parameters of a fourth-order twelve-parameter model.

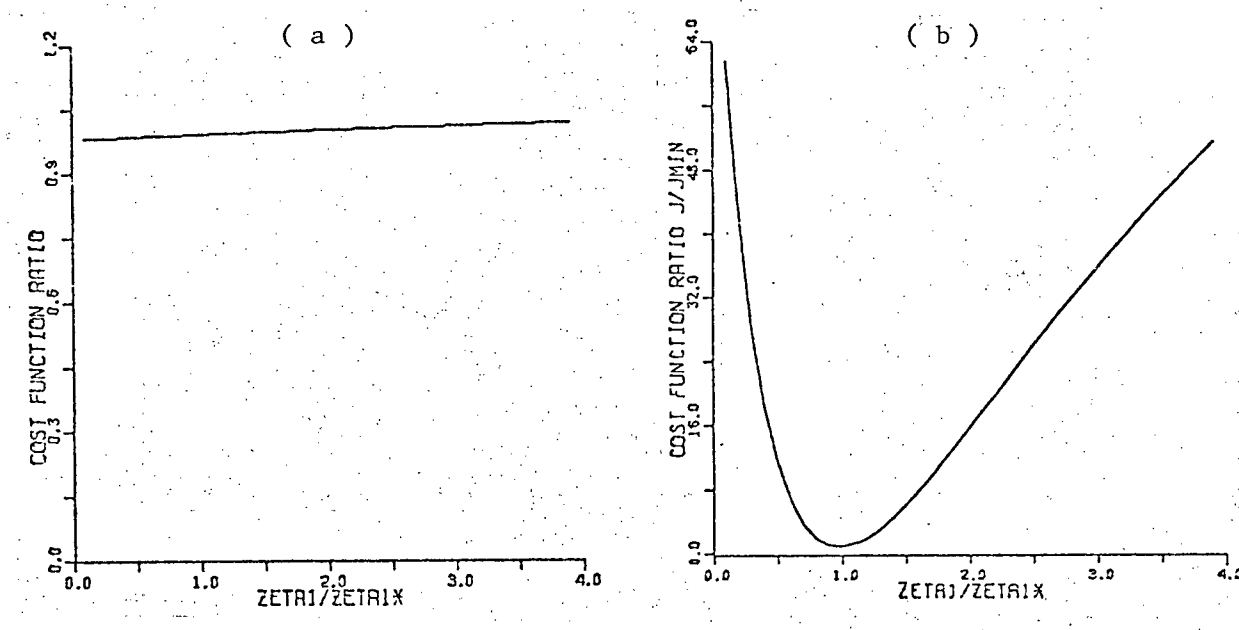

Fig. 3.5 The cost function vs. the damping coefficient of a dynamic equivalent machine

a) a third-order five-parameter model

b) a second-order three-parameter model.

remaining parameters and the estimated parameters were unique, resulting a third-order five-parameter equivalent model. Detail of this study will be included in Chapter 4.

It is important to mention that the insensitivity of the cost function to certain parameter α_i does not justify the elimination of that particular parameter because of two reasons:

1) The cost function insensitive to α_i in a higher order model may become sensitive to the same parameter in a lower order model. Fig. 3.5 shows that the cost function was found insensitive to the damping coefficient of the third-order five-parameter model, Fig. 3.5(a), but sensitive to the same parameter of a reduced second-order three-parameter model, Fig. 3.5(b).
2) The parameter may be essential to represent the dynamic characteristic of the synchronous machine, such as transient reactance or inertia constant.

3-5 Estimation of Equivalent Machine Voltages

For the simulation of the dynamic response of the equivalent system, the terminal voltages of the equivalent machines must be estimated when a transmission line are included in the equivalent model. There will be no changes in topology, parameters, and steady state values of the study system.

Let the currents, voltages and admittances of the study system and the equivalent system respectively, identified by the subscripts s and e. The current equation of the original system may be written

$$\begin{bmatrix} I_s \\ I_e \end{bmatrix} = \begin{bmatrix} y_{ss} & y_{se} \\ y_{es} & y_{ee} \end{bmatrix} \begin{bmatrix} V_s \\ V_e \end{bmatrix} \tag{3.21}$$

and that of the equivalent system

$$\begin{bmatrix} I_s \\ \tilde{I}_e \end{bmatrix} = \begin{bmatrix} \tilde{y}_{ss} & \tilde{y}_{se} \\ \tilde{y}_{es} & \tilde{y}_{ee} \end{bmatrix} \begin{bmatrix} V_s \\ \tilde{V}_e \end{bmatrix} \tag{3.22}$$

Since the order of the external system and the number of buses have been greatly reduced, the admittances' matrices of equations (3.21) and (3.22) are different, but the off-diagonal elements of the submatrix $\tilde{y}_{ss}$ are the same as those of y_{ss}.

Let the study system current of equation (3.22) be written

$$I_s^* = \tilde{y}_{se} \tilde{V}_e \tag{3.23}$$

where

$$I_s^* = I_s - \tilde{y}_{ss} V_s \tag{3.24}$$

If $\tilde{y}_{se}$ is a square and nonsingular matrix, then

$$\tilde{V}_e = \tilde{y}_{se}^{-1} I_s^* \tag{3.25}$$

But, if $\tilde{y}_{se}$ is not square matrix and equation (3.23) is over-determinant, i.e. the number of buses of the external equivalent system is less than the number of buses of the study system, a linear least-square estimate of $\tilde{V}_e$ can be obtained

$$\tilde{V}_e = (\tilde{y}'_{se} \tilde{y}_{se})^{-1} \tilde{y}'_{se} I_s^* \tag{3.26}$$

When the number of buses of the external equivalent system is more than the number of buses of the study system (under-determinanat system), a linear least-square estimate of $\tilde{V}_e$ may be obtained by assuming a cost function of

the form

$$J = \frac{1}{2} (\tilde{V}_e - \bar{V}_e)' \; W \; (\tilde{V}_e - \bar{V}_e) \tag{3.27}$$

where $\bar{V}_e$ is chosen value for $\tilde{V}_e$ from engineering judgement according to the system topology, and W is a weighting matrix. A constraint g is used

$$g = I_s^* - \tilde{y}_{se} \tilde{V}_e = 0 \tag{3.28}$$

Introducing a Lagrange multiplier λ to equation (3.27) and minimizing J yields

$$\tilde{V}_e = \bar{V}_e - W^{-1} \tilde{y}'_{se} \lambda \tag{3.29}$$

Solving equations (3.28) and (3.29) together gives

$$\tilde{V}_e = \bar{V}_e + W^{-1} \tilde{y}'_{se} (\tilde{y}_{se} W^{-1} \tilde{y}'_{se}) \quad (I_s^* - \tilde{y}_{se} \bar{V}_e) \tag{3.30}$$

4. CASES STUDIED AND RESULTS

Two power systems, one five-machine system and one thirteen-machine system are used to test the dynamic equivalencing techniques developed in the earlier part of this thesis. Three different test systems are considered:

1) Test system 1: The five-machine power system with two machines included in the study system, and three in the external system, Fig. 4.1.

2) Test system 2: The thirteen-machine power system with two machines in the study system, and eleven in the external system, Fig. 4.2.

3) Test system 3: The same thirteen-machine power system but with three machines included in the study system, and ten in the external system, Fig. 4.3.

In all three test systems, dashed lines are used in the figures to show the boundaries, which separate the study systems from the external systems. General information of these test systems are shown in Table 4.1.

Table 4.1 General information of the test systems

Test system	Number of machines	Number of transmission lines	Number of loads	Number of boundary buses	Number of machines of the study system	Number of loads of the study system
#1	5	6	5	1	2	2
#2	13	18	12	2	2	1
#3	13	18	12	3	3	2

4-1 Power Systems Data

The power systems data are given in per-unit on the 10,000 MVA and 500 kV basis for the five-machine power system, and on 100 MVA and 345 kV basis on bus (a) for the thirteen-machine power system, except the time constants in seconds, and transmission impedances of test systems 2 and 3 are in percentage.

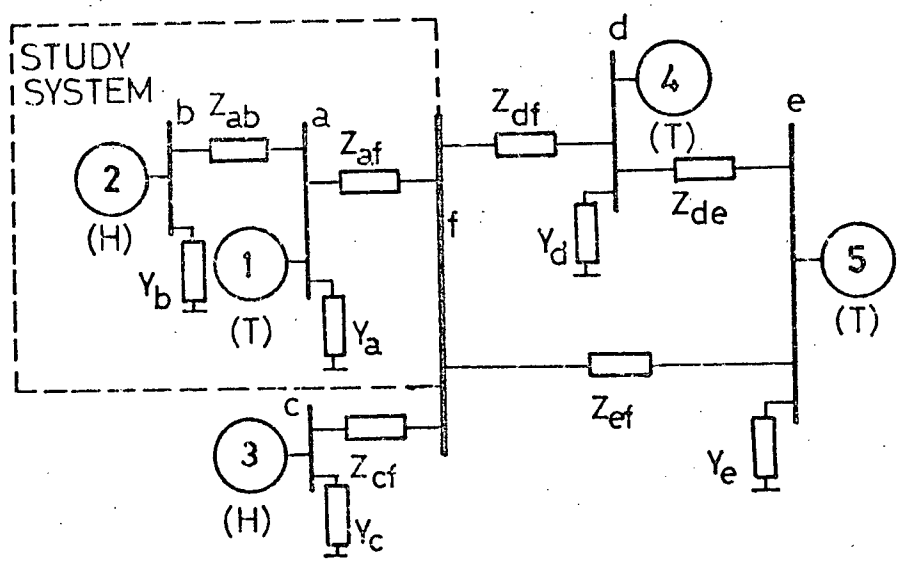

TRANSMISSION LINES

R_{ab}	R_{af}	R_{cf}	R_{de}	R_{df}	R_{ef}
0.120	0.030	0.032	0.150	0.186	0.240
X_{ab}	X_{af}	X_{cf}	X_{de}	X_{df}	X_{ef}
2.397	0.597	0.639	2.996	3.710	4.790

LOCAL LOADS

G_a	G_b	G_c	G_d	G_e
0.0098	0.0192	1.0884	0.6598	1.2690
B_a	B_b	B_c	B_d	B_e
-0.0049	-0.0092	-0.5271	-0.3195	-0.6149

Fig. 4.1 Test System 1

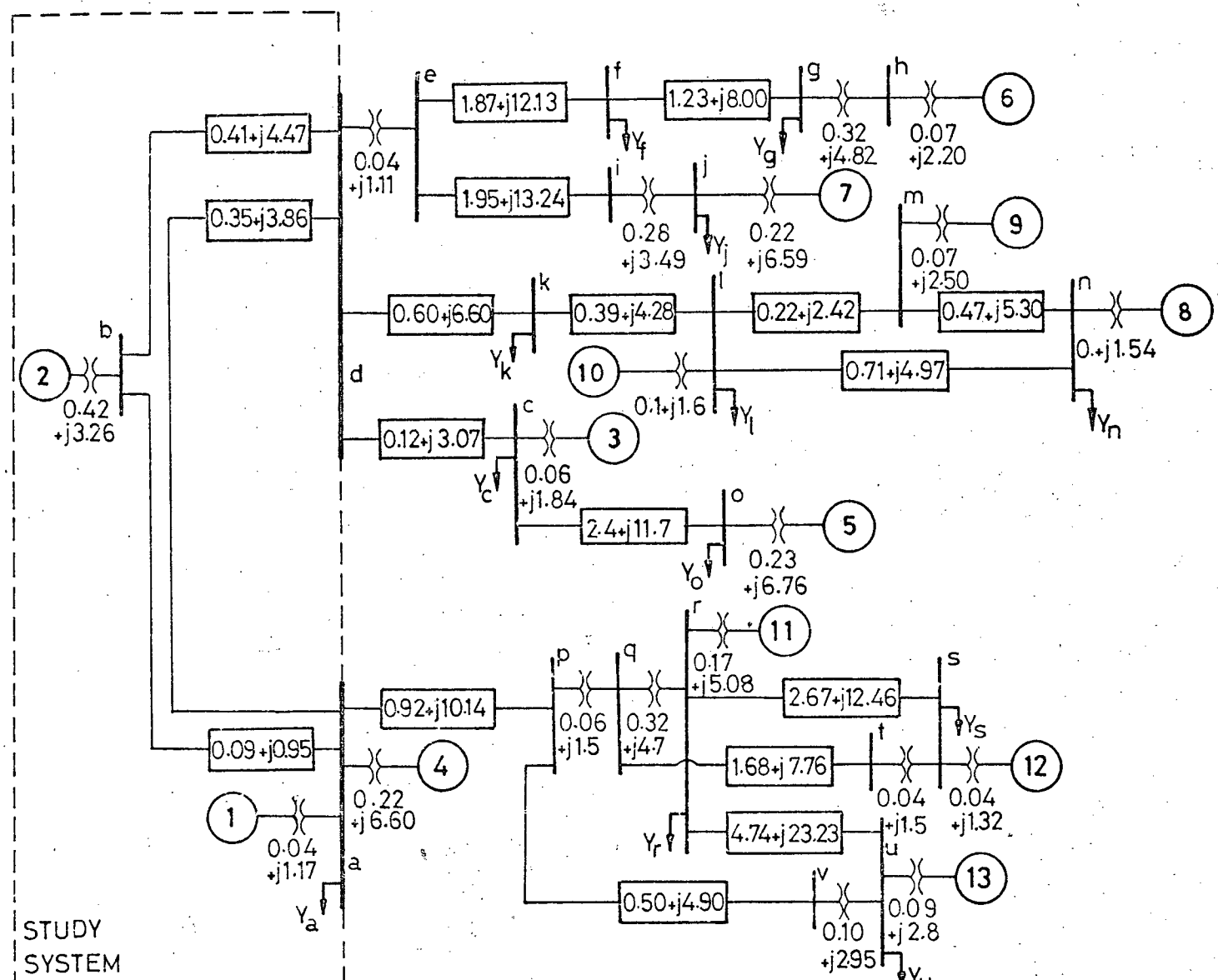

Fig. 4.2 Test system 2.

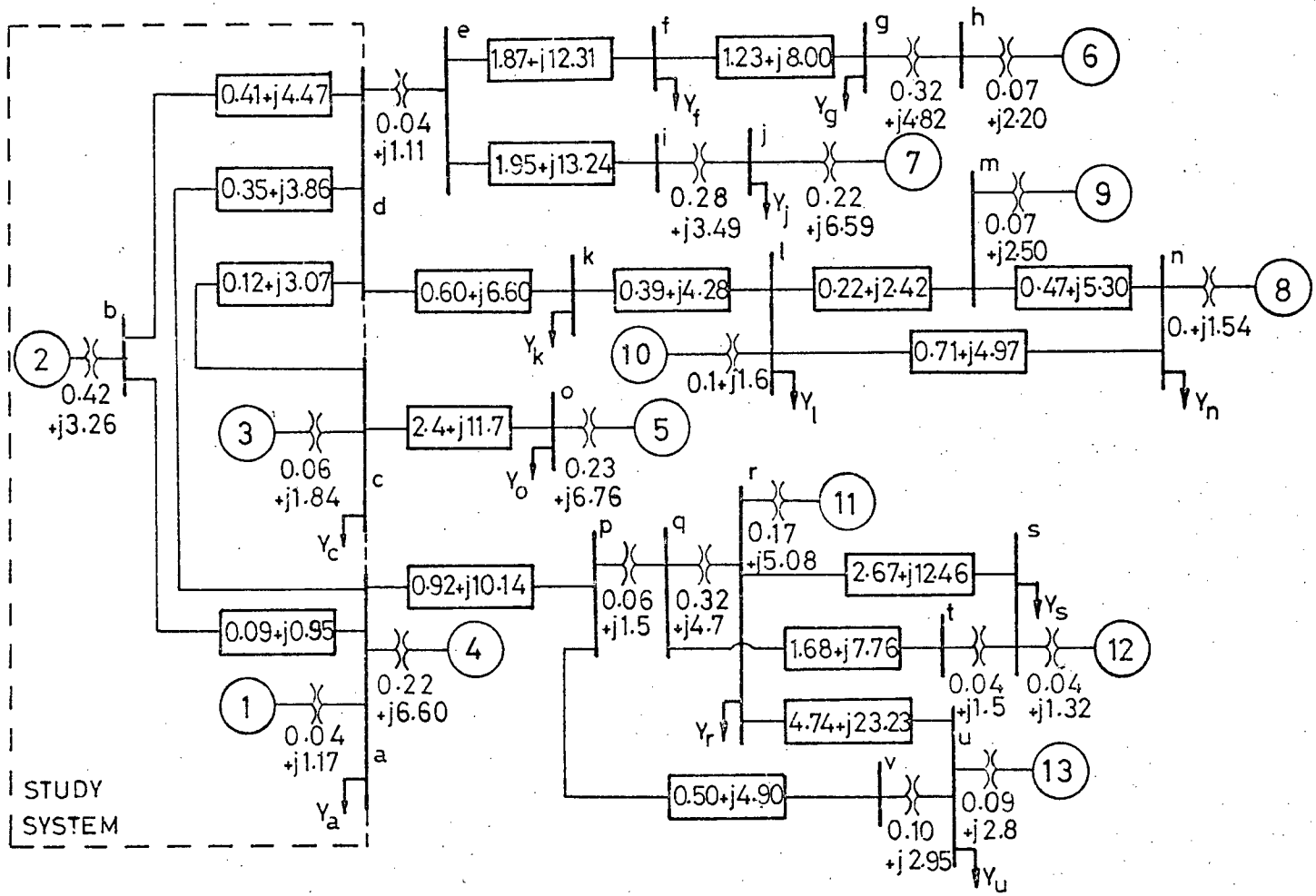

Fig. 4.3 Test system 3.

Some machines of the test systems are actually coherent equivalents of a large number of generating units. Nevertheless, the test systems serve as good examples for developing and testing the dynamic equivalencing techniques.

To generate dynamic responses of the original system with an intentional disturbance, complete data of the entire system are required. However, the data of the external system are not required for the estimation of the dynamic equivalents.

4-1-1 Data of the Five-Machine System

The data of transmission lines and local loads are given in Fig. 4.1, the machine data in Table 4.2. In addition, each machine is assumed to have 10% damping by itself in terms of the damping coefficient ζ of the normalized torque equation, and a solid state exciter with time constant TA of 0.05 seconds.

Table 4.2 Machine data of the five-machine power system.

Machine Number	MW	M	X'_d	X_d	X_q	T'_{do}	KA
1(T)	600	0.460	3.20	16.8	16.6	4.00	50.0
2(H)	900	1.10	1.60	8.18	4.62	7.76	50.0
3(H)	13000	7.41	0.250	1.28	0.713	7.76	50.0
4(T)	7000	0.280	0.799	4.30	4.23	5.40	50.0
5(T)	14000	0.320	0.890	4.65	4.50	5.54	40.0

4-1-2 Data of the Thirteen-Machine System

The data of transformers and transmission lines are given in Figs. 4.2 and 4.3, in percentage, the load admittances are

$Y_a = 5.00 + j2.19$ $Y_e = 3.06 + j1.15$ $Y_f = 2.20 + j0.60$

$Y_g = 3.40 + j0.85$ $Y_j = 3.20 + j1.28$ $Y_k = 2.68 + j1.00$

$Y_e = 7.70 + j1.60$ $Y_n = 358.0 + j0.90$ $Y_o = 2.00 + j0.53$

$Y_r = 3.97 + j1.25$ $Y_s = 3.33 + j1.14$ $Y_u = 8.45 + j2.16$

and the data of the synchronous machines are given in Table 4.3. A damping coefficient of 10% is assumed for each machine.

Table 4.3 Machine data of the thirteen-machine power system.

Machine Number	MW	M	x'_d	x_d	x_q	T'_{do}	KA	TA
1	960	65.46	.0208	.1675	.1675	6.7	100	.02
2	600	55.20	.0560	.3030	.2820	5.5	100	.02
3	660	64.56	.0440	.1715	.1023	6.1	100	.02
4	100	16.64	.1269	1.192	1.192	5.6	18.5	.20
5	135	6.52	.2467	.8667	.5207	3.5	40	.06
6	390	38.36	.0386	.3158	.2624	4.3	160	.03
7	184	27.94	.0789	.4993	.4819	3.3	18.5	.20
8	35047	3500	.0010	.0010	.0010	(constant E'_q)		
9	600	78.00	.0179	.1285	.1230	4.0	50	.02
10	800	68.40	.0579	.2106	.2050	4.8	400	.02
11	140	16.10	.1060	1.540	1.490	7.9	45	.06
12	691	70.42	.0285	.1801	.1376	5.5	(no V.R.)	
13	563	56.72	.0392	.3366	.3270	5.5	160	.02

4-2 Number of Dynamic Equivalent Machines

The number of the dynamic equivalents of the external system is determined after a boundary line has been drawn; each boundary bus is to be connected to one external equivalent machine.

Since the boundary of test system 1 passes through one boundary bus (f), that of test system 2 passes through the buses a and d, and that of the third test system passes through the boundary buses a, c and d, there are one, two and three dynamic equivalents respectively, as shown in Fig. 4.4 (a), (b) and (c).

(a) Test system 1

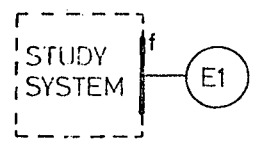

(b) Test system 2

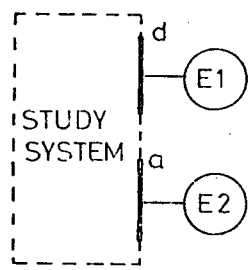

(c) Test system 3

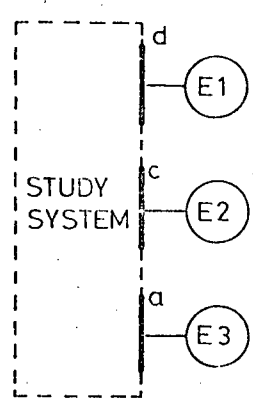

Fig. 4.4 Number of the dynamic equivalents.

4-3 Choice of the Equivalent Machine Models

The algorithm presented in Section 3-4-2 is used to select the order and number of parameters of the equivalent machines' models. For the model chosen, the estimated parameters must be unique, and the dynamic performances of the original system and the equivalent system should be in good agreement.

In the algorithm, the equivalent model is chosen by observing the variation of the cost function when the parameters varied. The cost function in this study is calculated from the deviation of the equivalent system responses as compared with those of the original system for the same pulsed excitation disturbance. The same pre-recorded original system responses due to the pulsed excitation are used also for parameter identification.

4-3-1 Selection of the Equivalent Model for Test System 1

The equivalent model of test system 1 is first assumed to be a full model of fourth-order and twelve-parameter. The model is given in Table 2.1 and shown in Fig. 2.5. However, the cost function insensitivity to some of these parameters indicates that the model is over-represented. Examples were shown in Fig. 3-4. In the figure, the cost function is insensitive to the excitation time constant TA, but sensitive to the transmission line resistance R.

The next reduced model listed in Table 2.1 is then tested. It is a third-order and seven-parameter model in which the transmission line and voltage regulator are eliminated, and a non-salient pole machine is assumed. Although the model is adequate according to the cost function-variation test, it does not give unique estimated parameters. A further reduction step is

then essential to satisfy the uniqueness condition. The reduction achieved by removing the local load of the equivalent machine resulting in the third-order and five-parameter model given in Table 2.1 and shown in Fig. 2.6. The model proves adequate to simulate the dynamic interactions of the external system and the estimated parameters are unique.

4-3-2 Selection of the Equivalent Model for Test System 2

Test system 2 has two external dynamic equivalents as shown in Fig. 4.4(b). The same model is assumed for the two equivalent machines.

The rough choice of the equivalent model is somehow related to the size of the external system; the larger the external system, the simpler the equivalent model could be. Examination of the data of test system 2 shows that the external system is quite large. In order to save computation time, it is decided that the third-order five-parameter model be used as a starting point since it is adequate for test system 1.

The cost function-variation test shows that the cost function according to this model is insensitive to some parameters. Typical examples are shown in Fig. 4.5. Therefore, one more reduction step is carried out, resulting in the second-order three-parameter model which is given in Table 2.1 and shown in Fig. 2.7. It is a constant voltage behind transient reactance which proves to be the most suitable model.

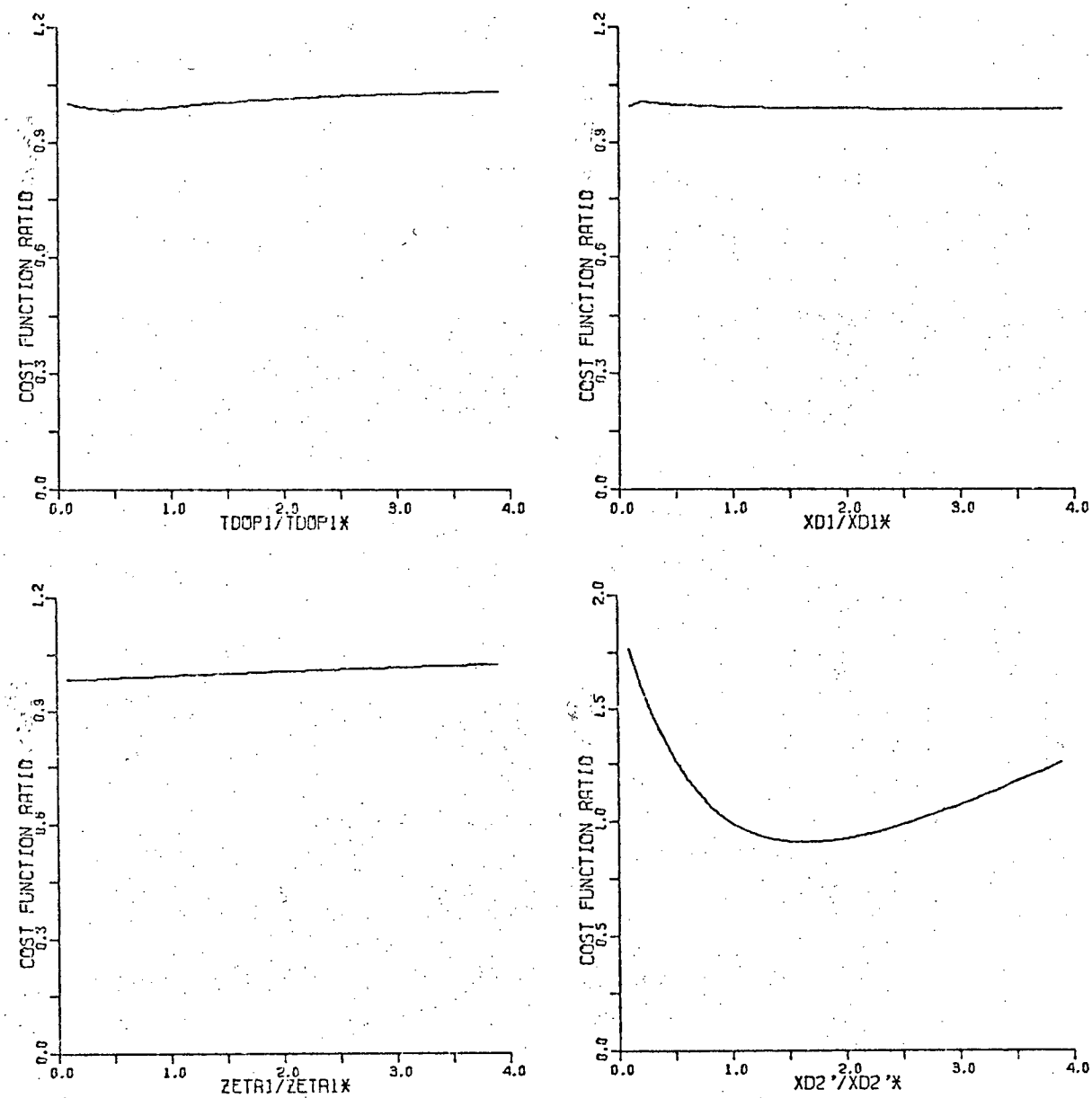

Fig. 4.5 The cost function vs. some parameters of test system 2; a third order five-parameter model.

4-3-3 Selection of the Equivalent Model for Test System 3

Test systems 2 and 3 are constituted from the same power system but with different boundaries. There are three machines included in the study system, and three dynamic equivalents are assumed for test system 3, as shown in Fig. 4.4(c). The same model is chosen for each equivalent machine. Moreover, the equivalent model chosen for test system 2 is found also adequate for test system 3.

4-4 Estimated Parameters

The parameters of the equivalent models are identified by the algorithm developed in earlier chapters of this thesis. The computer program is supplied with the full data of the study system, the topology and the hypothesized model of the equivalent external system, the pre-recorded original system responses due to disturbance, and the initial guesses of parameters.

The responses of machine #1 due to a pulsed excitation voltage of one second duration applied to the same machine are recorded for two seconds. The responses are used for the choice of equivalent model and the identification of the unknown parameters.

For the parameters to converge to their optimum values, the number of iterations varies enormously and depends very much upon both the step size and the initial guess.

Tables 4.4, 4.5 and 4.6 show the estimated parameters of test systems 1, 2 and 3, respectively, for three different initial guesses for each system. Table 4.5 shows the parameters of the two equivalent machines while Table 4.6 includes the parameters of the three equivalent machines.

It is clear from the tables that all the parameters in each case study converge closely to the same values regardless of the initial guesses. It is also shown that different boundaries yields different equivalents for the same original system.

Table 4.4 Identified equivalent parameters of test system 1 (Initial guesses are in parenthesis).

	Pulsed excitation on machine #1		
	Case I	Case II	Case III
M_{E1}	9.950 (10.0)	9.939 (5.00)	9.989 (20.0)
ζ_{E1}	0.1207 (0.25)	0.1212 (0.20)	0.1195 (0.30)
x'_{dE1}	0.5725 (0.25)	0.5713 (0.15)	0.5761 (0.60)
x_{dE1}	2.198 (1.20)	2.183 (0.80)	2.210 (2.00)
T'_{doE1}	5.360 (5.50)	5.157 (3.50)	5.400 (7.80)

Table 4.5 Identified equivalent parameters of test system 2.

	Pulsed excitation on machine #1		
	Case I	Case II	Case III
M_{E1}	39.48 (50.0)	39.25 (60.0)	39.52 (80.0)
ζ_{E1}	1.055 (0.50)	1.051 (1.0)	1.058 (1.5)
X'_{dE1}	0.01352 (0.20)	0.01311 (0.05)	0.01341 (0.1)
M_{E2}	154.8 (50.0)	154.15 (130.0)	154.41 (100.0)
ζ_{E2}	2.989 (0.5)	2.995 (2.5)	2.973 (2.0)
X'_{dE2}	0.1868 (0.6)	0.1871 (0.2)	0.1861 (0.4)

Table 4.6 Identified equivalent parameters of test system 3.

	Pulsed excitation on machine #1		
	Case I	Case II	Case III
M_{E1}	45.89 (30.)	45.82 (75.)	45.88 (50.)
ζ_{E1}	1.886 (.70)	1.882 (1.4)	1.901 (2.5)
x'_{dE1}	.0570 (.30)	.0572 (.04)	.0571 (.08)
M_{E2}	137.0 (50.)	137.2 (80.)	137.1 (100)
ζ_{E2}	2.519 (.80)	2.523 (1.2)	2.517 (2.0)
x'_{dE2}	.3411 (.40)	.3409 (.10)	.3397 (.25)
M_{E3}	117.3 (70.)	117.5 (85.)	117.4 (100)
ζ_{E3}	1.989 (.30)	1.995 (.60)	1.991 (2.0)
x'_{dE3}	.4363 (.50)	.4358 (.30)	.4364 (.40)

4-4-1 Cost Function

Figs. 4.6, 4.7 and 4.8, respectively, show the cost function ratio versus the equivalent parameters of test systems 1, 2 and 3. In the figures JMIN represents the optimum value of the cost function and the asterisked parameter is the identified value. All minima of the cost functions correspond to the best fit of the dynamic responses of the equivalent system with the identified parameters' values to those of the original system.

For some parameters, such as M and T'_{do} of test system 1, the convergence is faster when the initial guesses are on the small side.

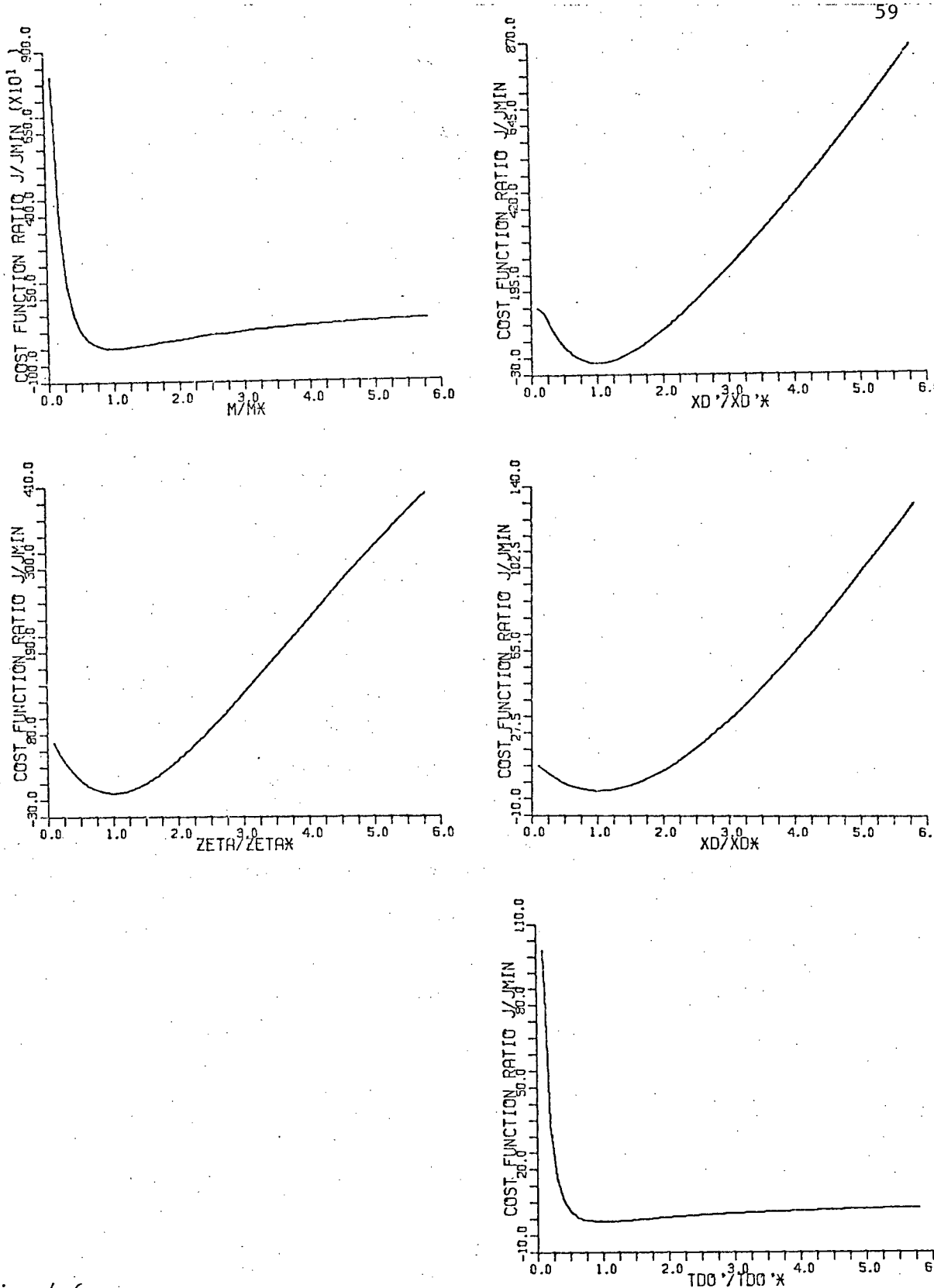

Fig. 4.6

Cost function vs. equivalent parameters of test system 1.

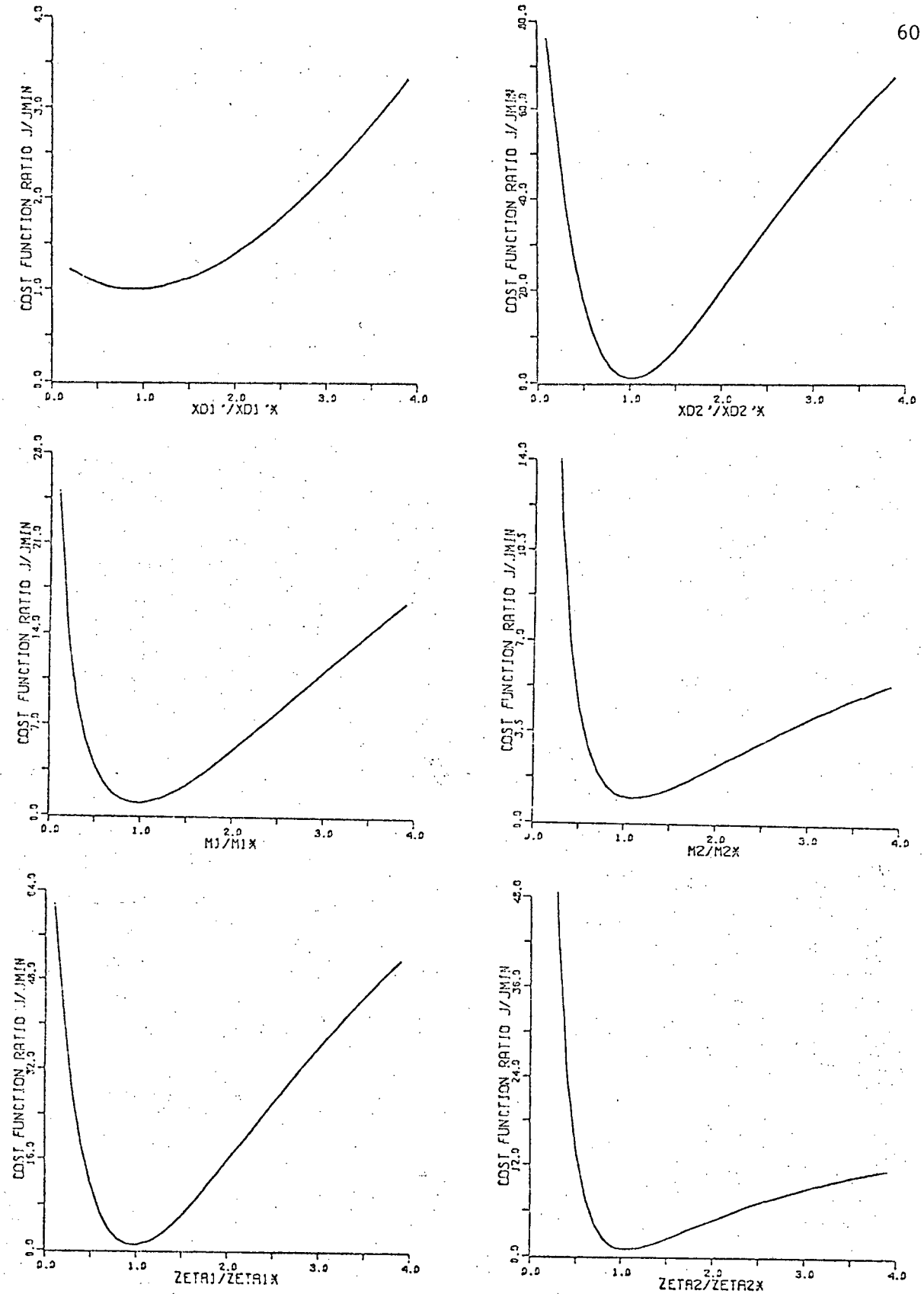

(a) Equivalent machine #1

(b) Equivalent machine #2

Fig. 4.7 Cost function vs. equivalent parameters of test system 2.

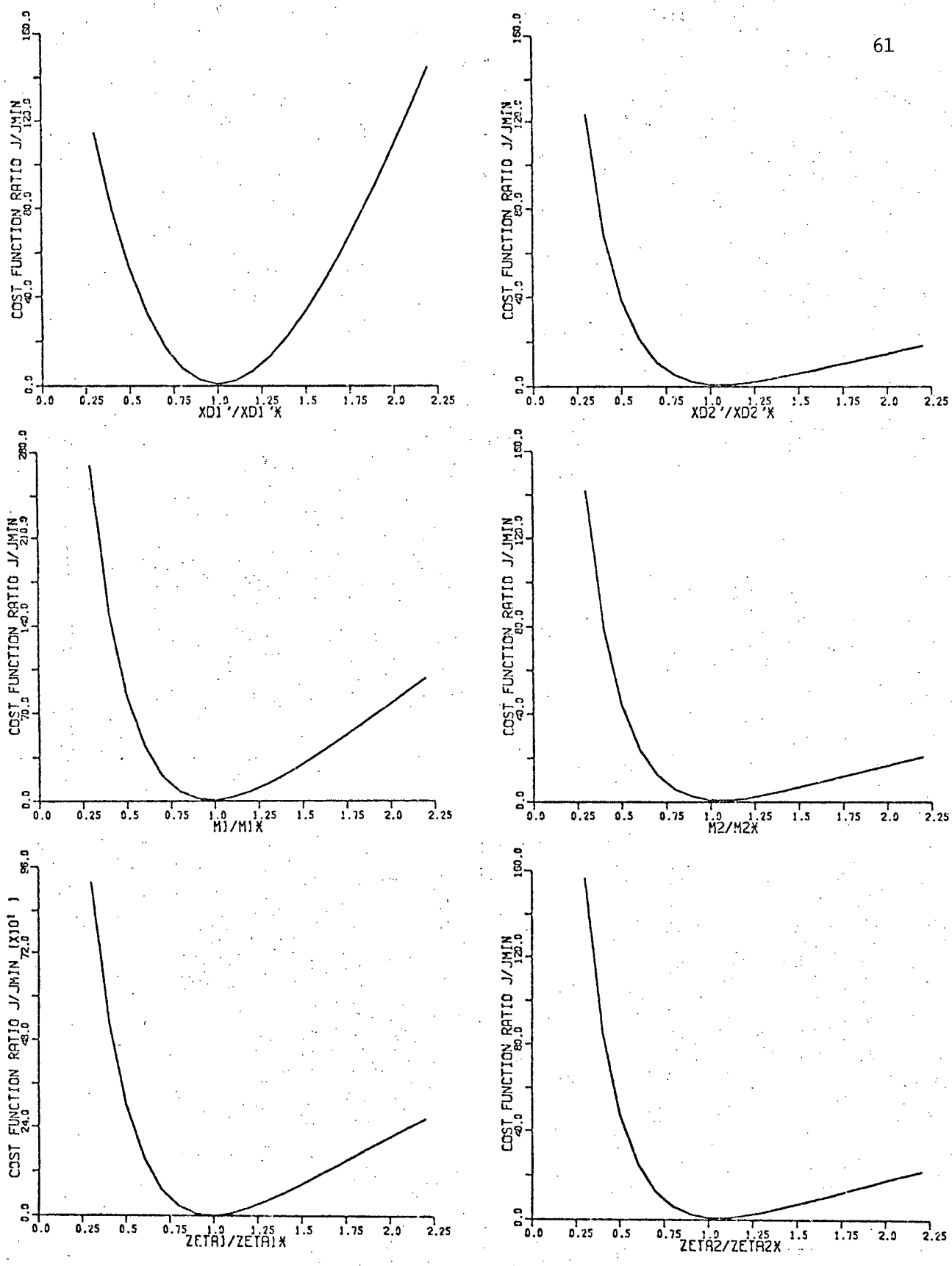

(a) Equivalent machine #1 (b) Equivalent machine #2

Fig. 4.8 Cost function vs. equivalent parameters of test system 3.

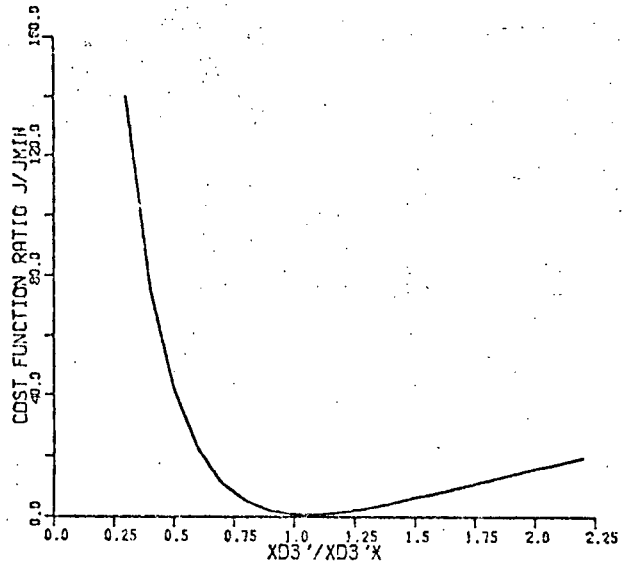

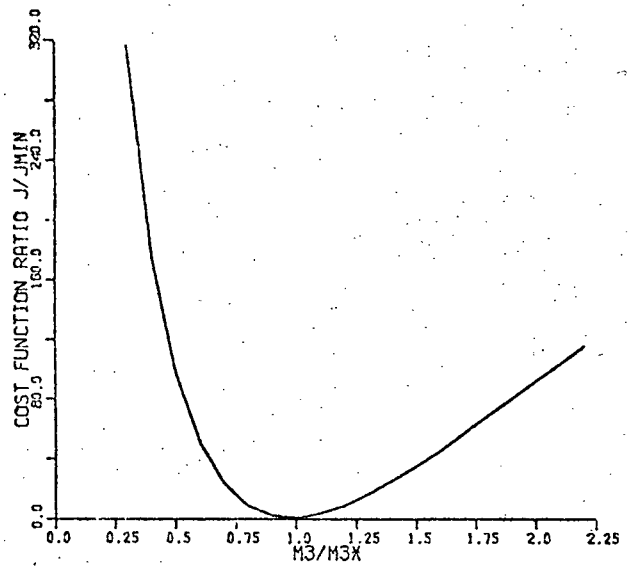

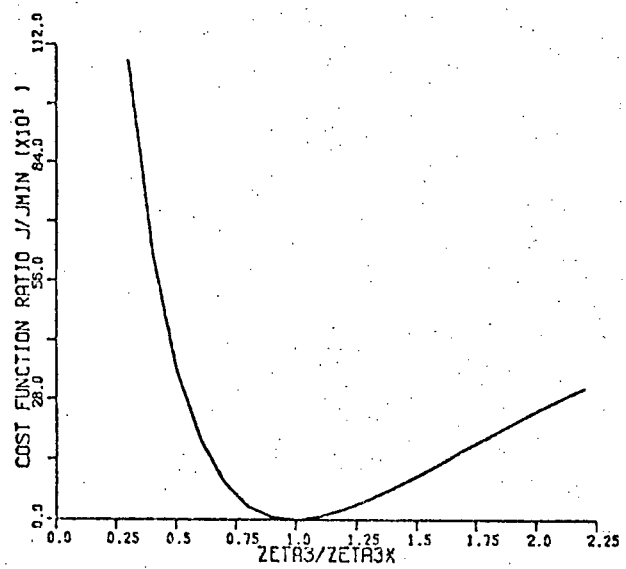

(c) Equivalent machine #3

4-4-2 Machine Responses Due to Pulsed Excitation

Figs. 4.9, 4.10 and 4.11 show the responses of machine #1 due to the pulsed excitation voltage on the same machine for test systems 1, 2 and 3, respectively. The equivalent system responses are shown in dashed lines which are based on the estimated results of case I of each test system, as compared with those of the original system which are shown in solid lines, for the same intentional disturbance. In all these studies, the pulsed excitation is applied for one second, the dynamic responses of the original system are recorded for two seconds, and the system settles down in about four seconds.

All results indicate that the simulated responses of the dynamic equivalent systems and those of the original systems are very close in both magnitude and frequency.

4-5 Parameter Estimation Using Other Machines' Responses

The responses of machine #1 due to an intentional disturbance on the same machine are used for the identification in Section 4-4. However, the dynamic equivalent should be identified by machine responses anywhere in the study system, and the uniqueness of the external equivalent system should not be affected if enough measurements and suitable equivalent model are used.

Table 4.7 shows four more case studies for the three test systems. The intentional disturbance is applied to a machine other than #1 in the study systems, and the dynamic responses are recorded from the same disturbed machine.

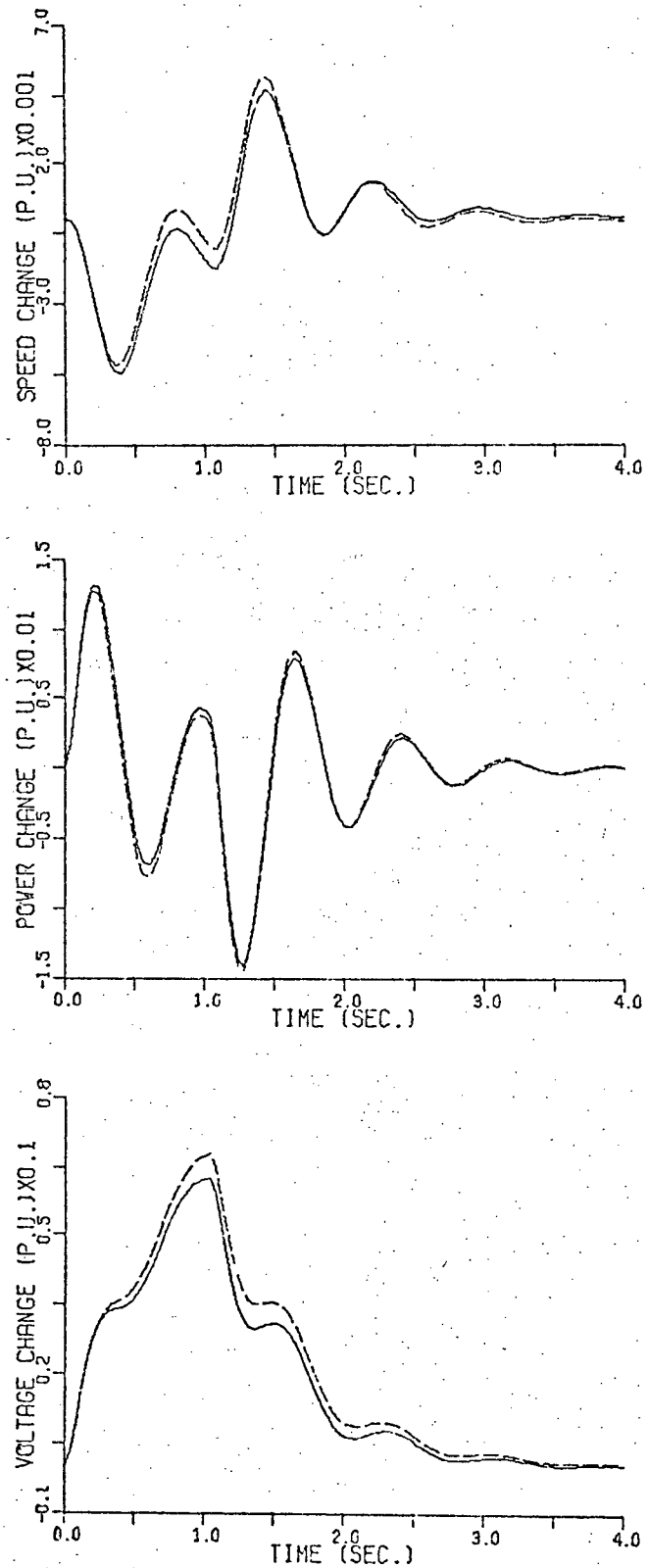

Fig. 4.9 Responses of test system 1 due to 10% pulsed excitation voltage.

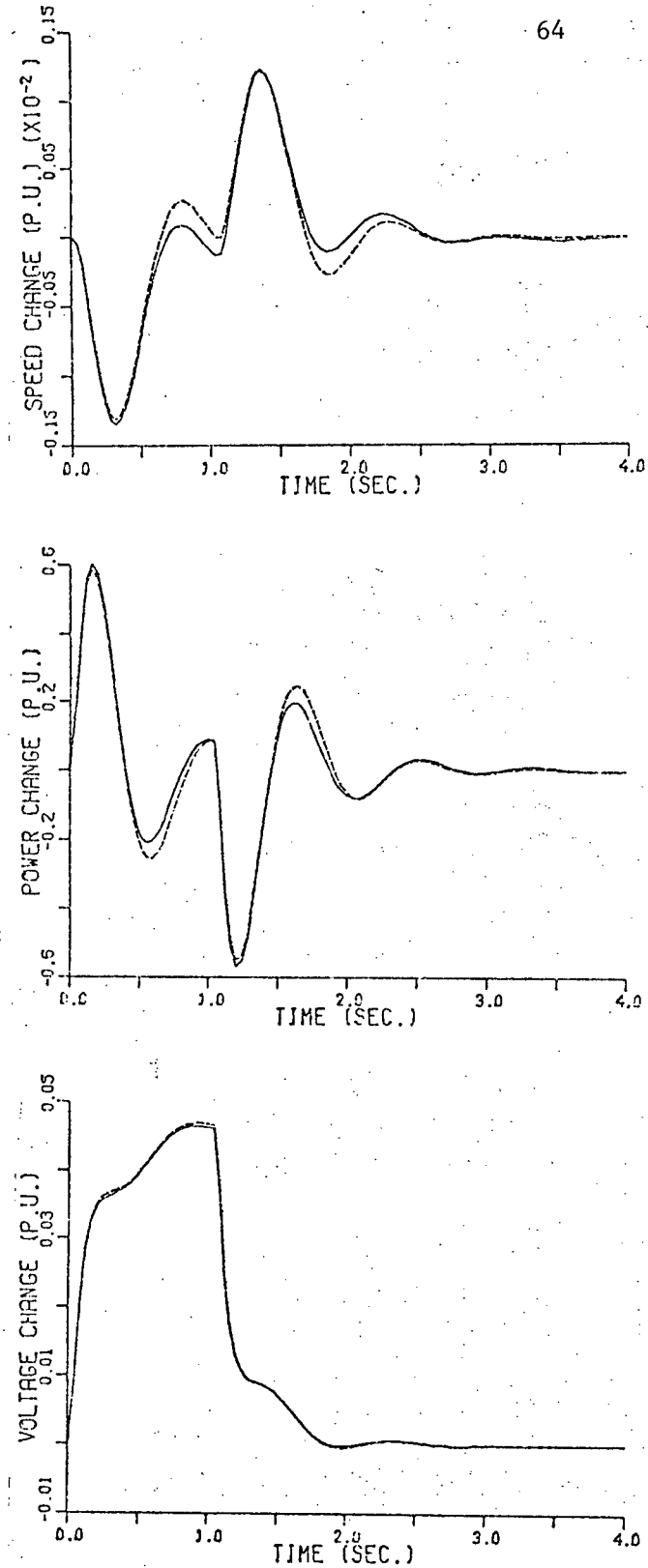

Fig. 4.10 Responses of test system 2 due to 5% pulsed excitation voltage.

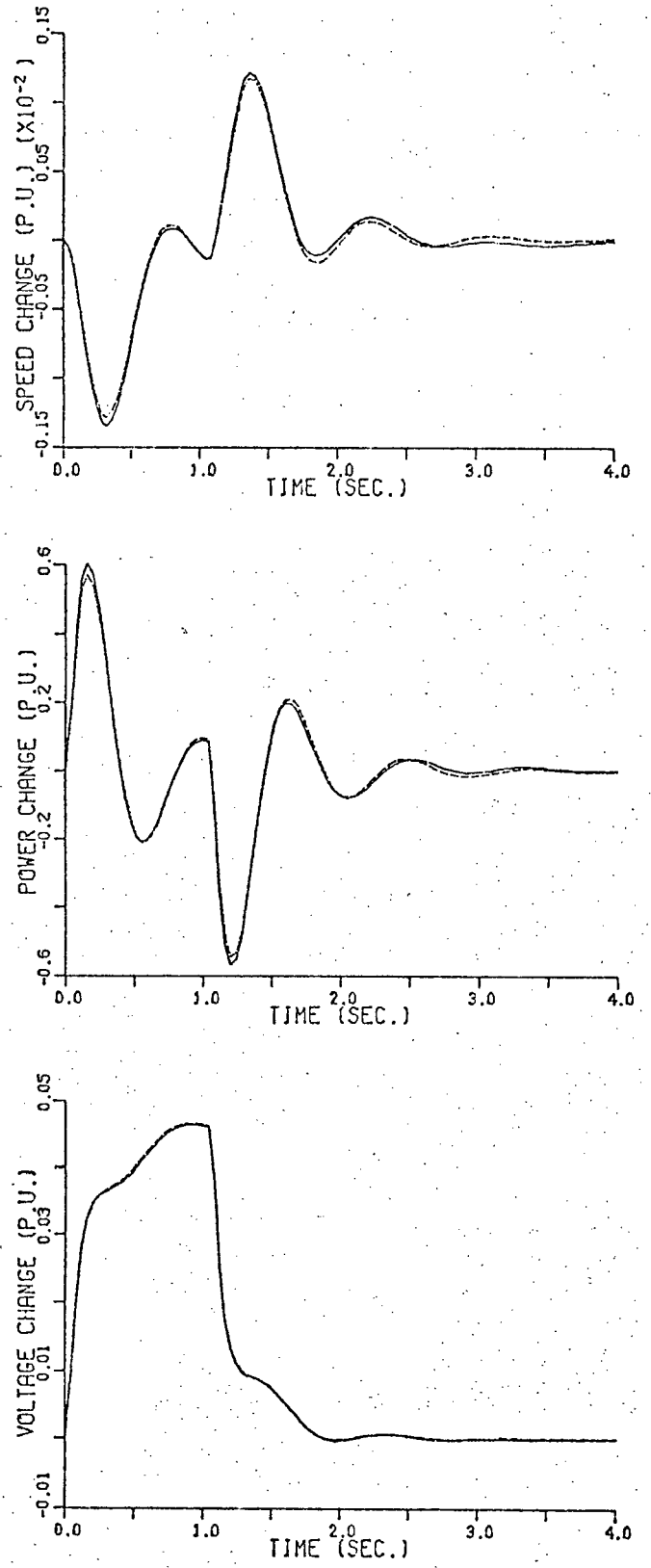

Fig. 4.11 Responses of test system 3 due to 5% pulsed excitation voltage.

Table 4.7 Case studies for parameter identification from other machines' responses.

Test system	Machine responses used for estimation			
	Machine #2		Machine #3	
	Case	Intentional disturbance	Case	Intentional disturbance
1	IV	7% U_E	-	-
2	V	5% U_E	-	-
3	VI	5% U_E	VII	5% U_E

Tables 4.8 and 4.9, respectively, show the results of cases IV and V. The first columns of Tables 4.4 and 4.5, respectively, are also included in each table for comparison. Table 4.1 shows the results of cases VI and VII. The last column from Table 4.6 is also included for comparison.

Table 4.8 Estimated parameters from machine #2 responses of test system 1.

	Pulsed excitation on machine #2	Pulsed excitation on machine #1
	Case IV	Case I
M_{E1}	9.154 (10.0)	9.95
ζ_{E1}	0.1449 (0.25)	0.1207
X'_{dE1}	0.5833 (0.25)	0.5725
X_{dE1}	2.186 (1.20)	2.198
T'_{doE1}	5.394 (5.50)	5.360

Table 4.9 Estimated parameters from machine #2 responses of test system 2.

	Pulsed excitation on machine #2	Pulsed excitation on machine #1
	Case V	Case I
M_{E1}	39.94 (50.0)	39.48
ζ_{E1}	1.069 (0.50)	1.055
X'_{dE1}	0.0141 (0.20)	0.01352
M_{E2}	155.12 (50.0)	154.8
ζ_{E2}	2.992 (0.5)	2.989
X'_{dE2}	0.201 (0.6)	0.1868

Table 4.10 Estimated parameters from machine #2 and machine #3 responses of test system 3.

	Pulsed excitation on machine #2	Pulsed excitation on machine #3	Pulsed excitation on machine #1
	Case VI	Case VII	Case I
M_{E1}	45.99 (40.)	46.12 (40.)	45.89
ζ_{E1}	1.811 (1.5)	1.790 (1.5)	1.886
X'_{dE1}	.0568 (.10)	.0560 (.10)	.057
M_{E2}	137.7 (130)	138.1 (130)	137.0
ζ_{E2}	2.531 (2.0)	2.498 (2.0)	2.519
X'_{dE2}	.3382 (.30)	.3321 (.30)	.3411
M_{E3}	116.9 (110)	118.1 (110)	117.3
ζ_{E3}	2.011 (2.5)	2.105 (2.5)	1.989
X'_{dE3}	.4410 (.40)	.4215 (.40)	.4363

All identified values of the parameters are very close and the dynamic equivalents are unique regardless of which machine responses of the study system are used for identification.

The three measurements, speed, power and voltage, are adequate and no additional measurements are required.

Figs. 4.12, 4.13, 4.14 and 4.15 compare the responses of the original system (solid lines) and dynamic equivalent systems (dashed lines) for case studies IV, V, VI and VII, respectively.

4-6 Parameter Estimation with Different Intentional Disturbances

The pulsed excitation signal used for identification is considered to be very realistic and always recommended whenever intentional disturbance is required, especially for on-line tests. However, other types of disturbances also shall be investigated. In any case, the nature of the disturbance should not affect the uniqueness of dynamic equivalents.

In this study, a ramp mechanical input torque signal, as shown in Fig. 4.16, was applied on machine #1 of test system 1. The estimated parameters due to this disturbance are shown in Table 4.11, together with those estimated by the pulsed excitation signal of Table 4.4. Fig. 4.17 shows the responses of the machine due to this mechanical torque disturbance, the solid line is for the original system and the dotted line for the dynamic equivalent. Similar results were obtained from other test systems, but are not recorded here for brevity.

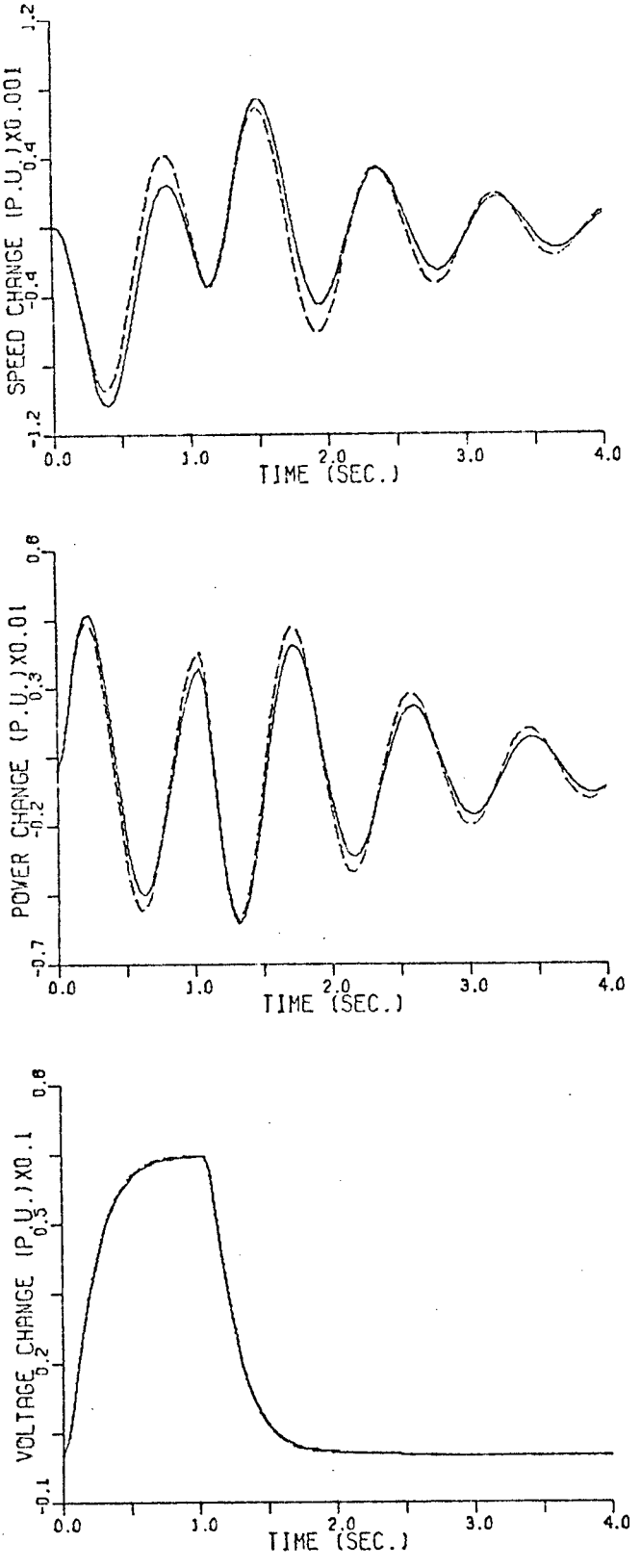

Fig. 4.12 Responses of machine #2 of test system 1.

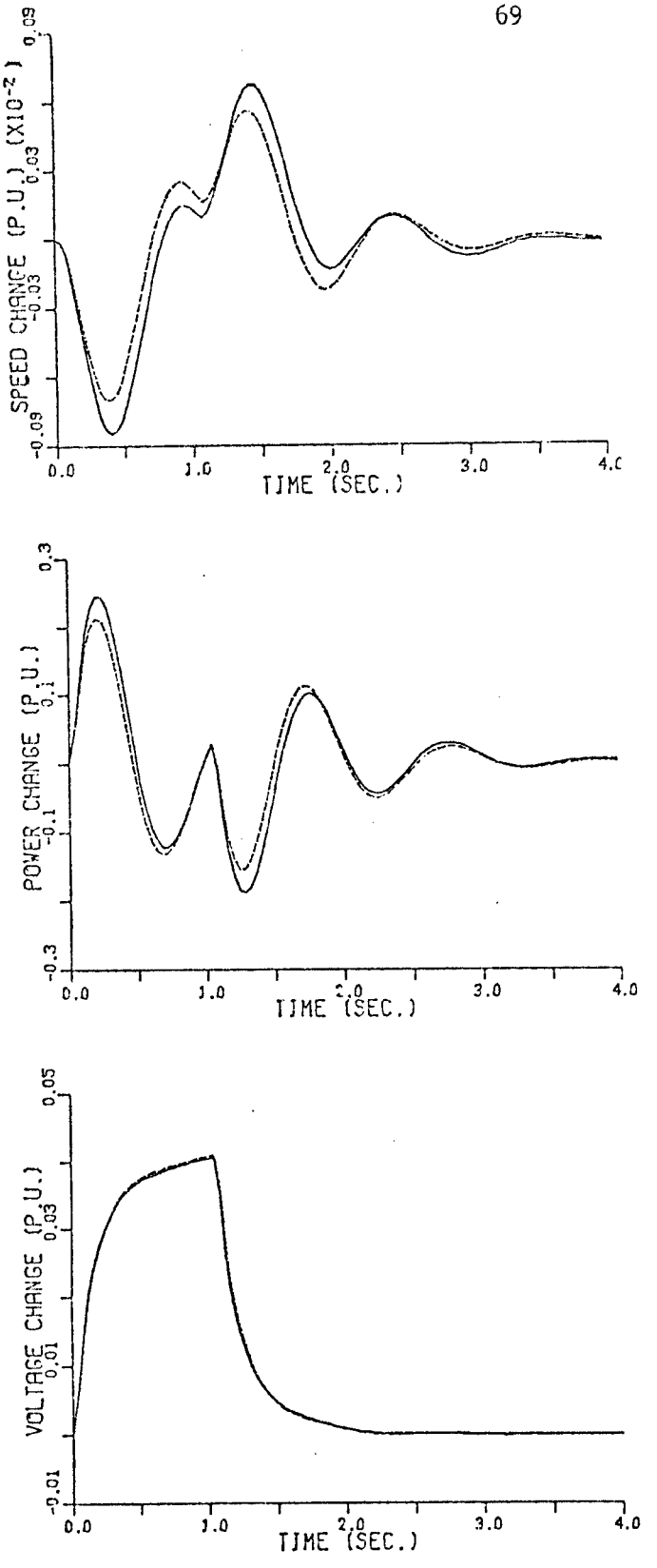

Fig. 4.13 Responses of machine #2 of test system 2.

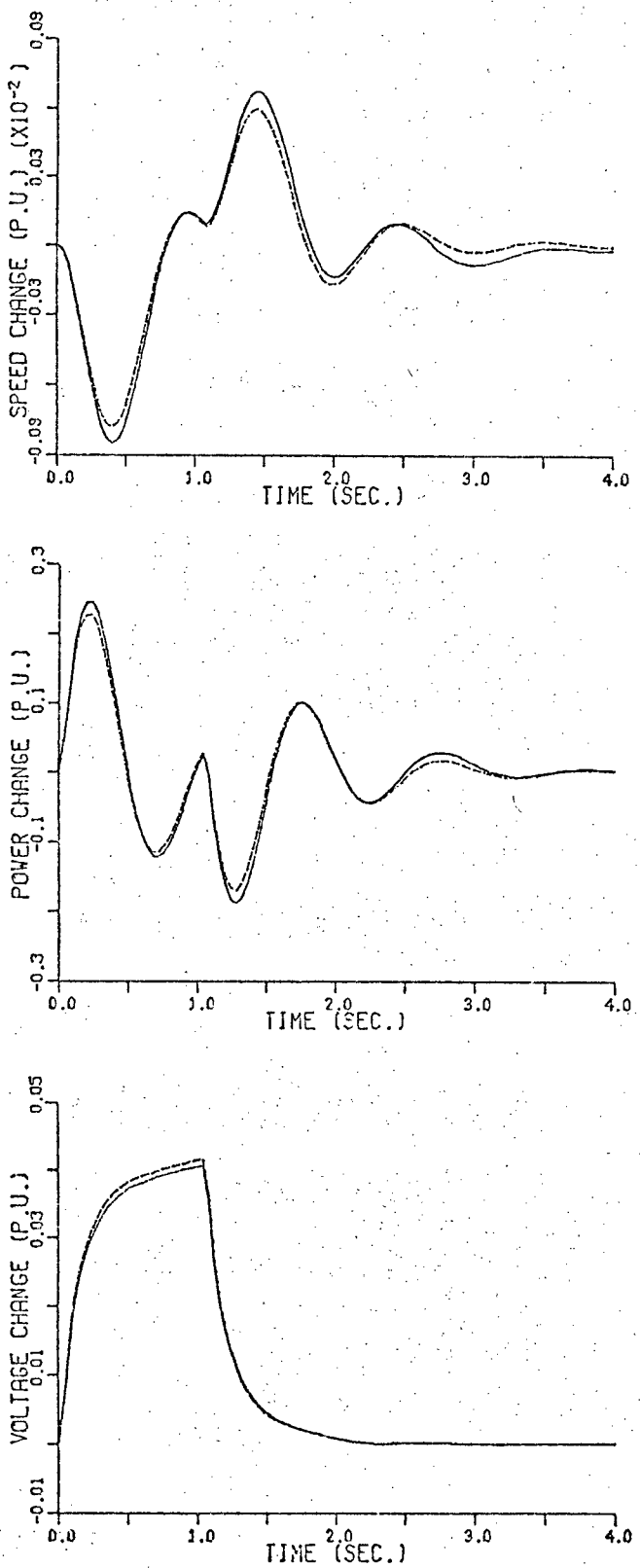

Fig. 4.14 Responses of machine #2 of test system 3.

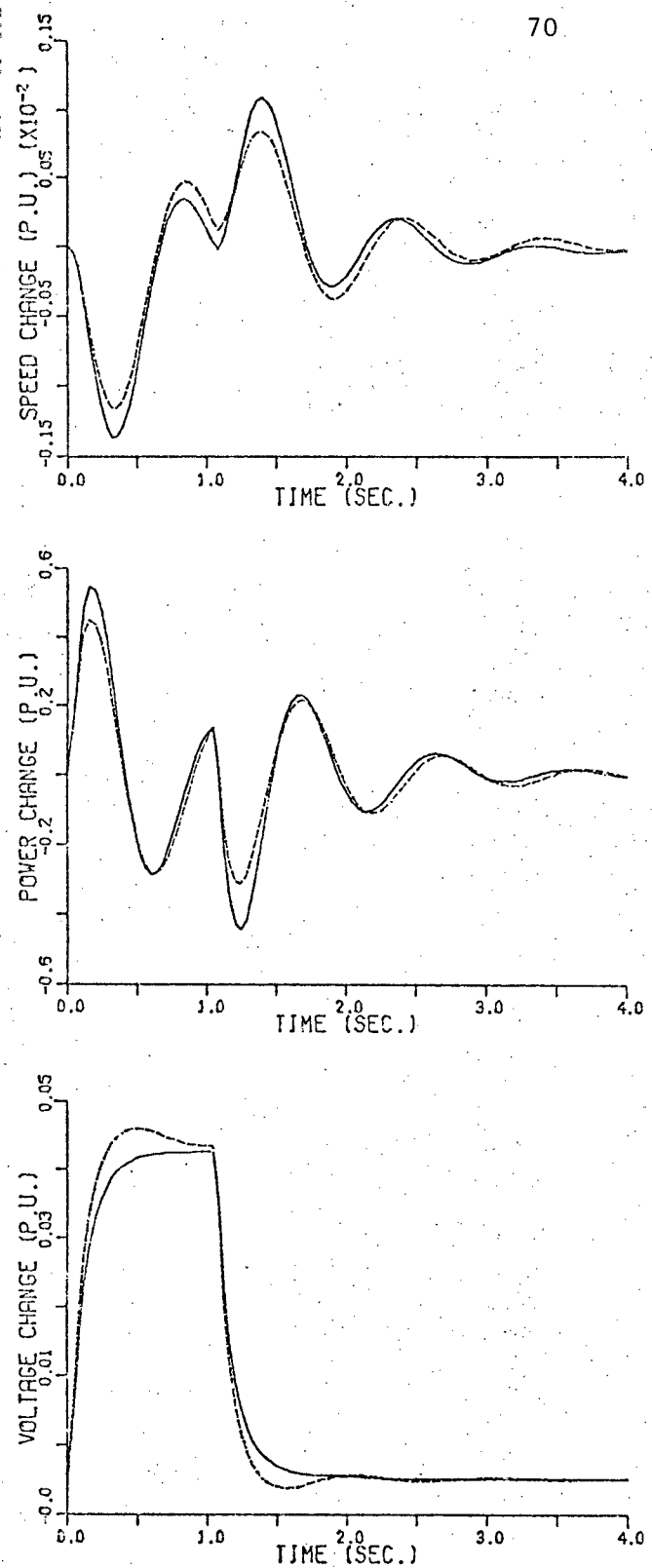

Fig. 4.15 Responses of machine #3 of test system 3.

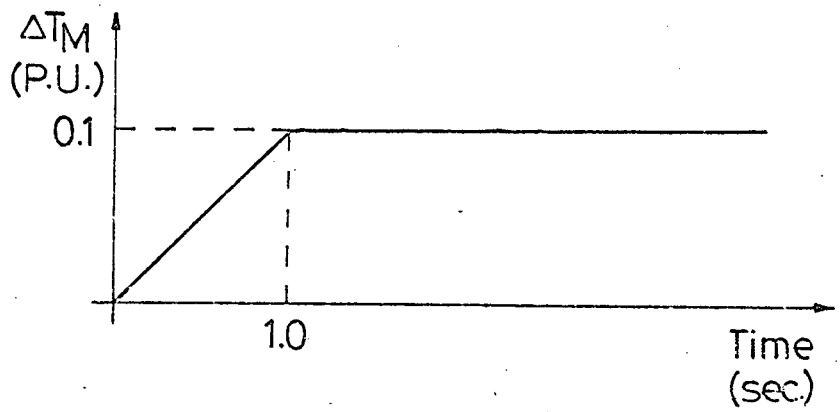

Fig. 4.16 Ramp mechanical torque disturbance.

Table 4.11 Parameter estimation from the response of test system 1 due to ramp torque disturbance.

	Ramp torque on machine #1	Pulsed excitation on machine #1
		Case I
M_{E1}	9.81 (10.0)	9.95
ζ_{E1}	0.1235 (0.25)	0.1207
X'_{dE1}	0.5731 (0.25)	0.5725
X_{dE1}	2.129 (1.20)	2.198
T'_{doE1}	5.159 (5.50)	5.360

The discrepancy of the responses begin to show after two seconds. All the responses, however, converge ultimately.

4-7 Measurement Noise Effect

Random measurement noise is added to the response of machine #1 due to the pulsed excitation intentional disturbance. The noise is assumed to be white [5], its magnitude is within 10% of the response maximum value. The unbiased minimum variance estimate presented in Section 3-1-2 is used to identify the parameters. Tables 4.12, 4.13 and 4.14 show the estimated

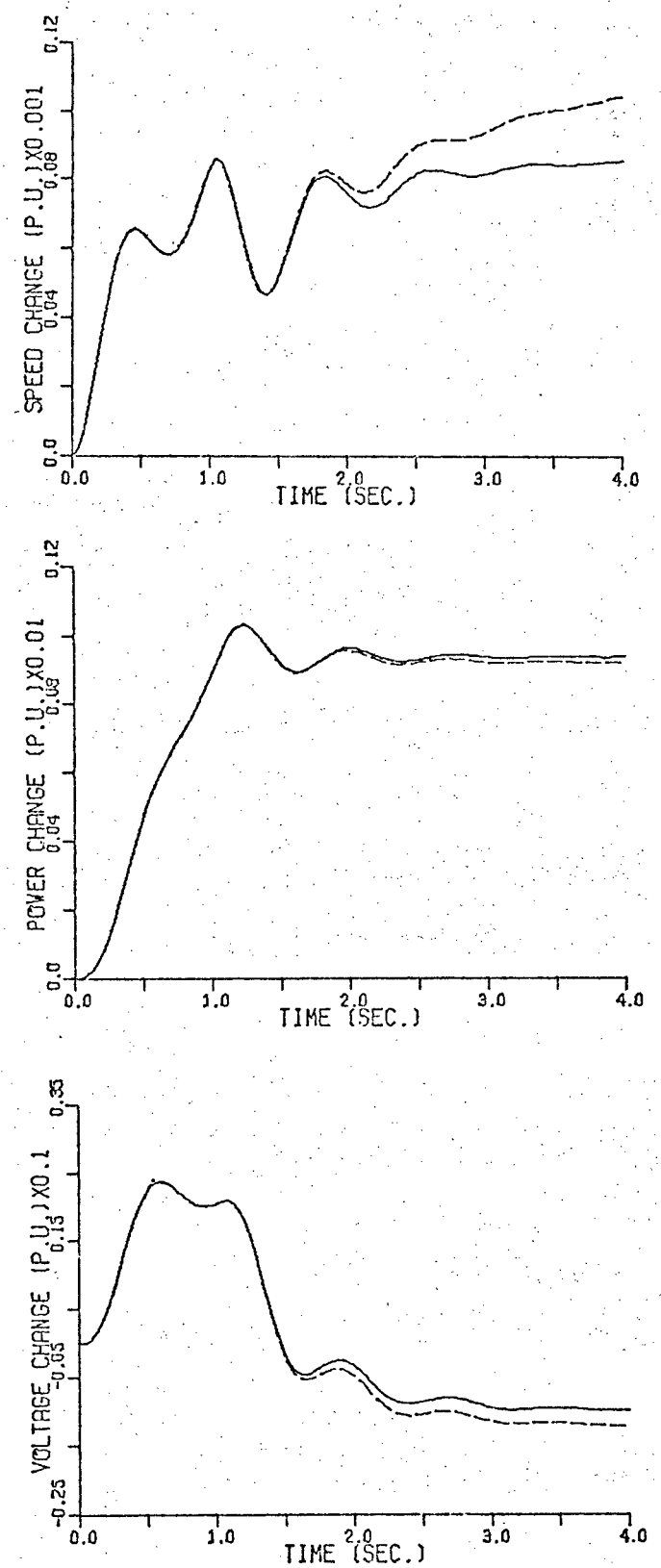

Fig. 4.17 Responses of test system 1 due to mechanical torque disturbance.

parameters of such cases of test systems 1, 2 and 3, respectively. In the last column of each table, the identified parameter values given in Tables 4.4, 4.5 and 4.6, respectively, obtained from the determinestic systems are also included. The results show that the added white measurement noise does not bias the estimate.

Table 4.12 Effect of measurement noise on the estimated parameters of test system 1.

	Pulsed excitation on machine #1 with measurement noise	Without noise
		Case I
M_{E1}	9.962 (10.0)	9.95
ζ_{E1}	0.1199 (0.25)	0.1207
X'_{dE1}	0.5770 (0.25)	0.5725
X_{dE1}	2.191 (1.20)	2.198
T'_{doE1}	5.292 (5.50)	5.360

Table 4.13 Effect of measurement noise on the estimated parameters of test system 2.

	Pulsed excitation on machine #1 with measurement noise	Without noise
		Case I
M_{E1}	39.35 (50.0)	39.48
ζ_{E1}	1.06 (0.50)	1.055
X'_{dE1}	0.01335 (0.20)	0.01352
M_{E2}	154.6 (50.0)	154.8
ζ_{E2}	2.981 (0.50)	2.989
X'_{dE2}	0.1863 (0.60)	0.1868

Table 4.14 Effect of measurement noise on the estimated parameters of test system 3.

	Pulsed excitation on machine #1 with measurement noise	Without noise
		Case I
M_{E1}	45.92 (80.)	45.89
ζ_{E1}	1.891 (3.0)	1.886
X'_{dE1}	.0569 (.50)	.0570
M_{E2}	136.9 (30.)	137.0
ζ_{E2}	2.511 (3.0)	2.519
X'_{dE2}	.3421 (.60)	.3411
M_{E3}	117.7 (30.)	117.3
ζ_{E3}	1.995 (3.0)	1.989
X'_{dE3}	.4568 (.80)	.4363

The responses of machine #1 of test systems 1, 2 and 3 due to the pulsed excitation are shown in Figs. 4.18, 4.19 and 4.20, respectively. The original measurements with noises are shown by the solid lines and the responses of the estimated dynamic equivalents by dashed lines.

4-8 Off-Line and On-Line Identification

For on-line applications, the dynamic equivalent must be identified quickly with minimum iterations, and as frequently as required. The computational time varies widely and depends strongly on the following factors:

1) The number of dynamic equivalent machines.
2) The order and number of unknown parameters of the equivalent machine model.

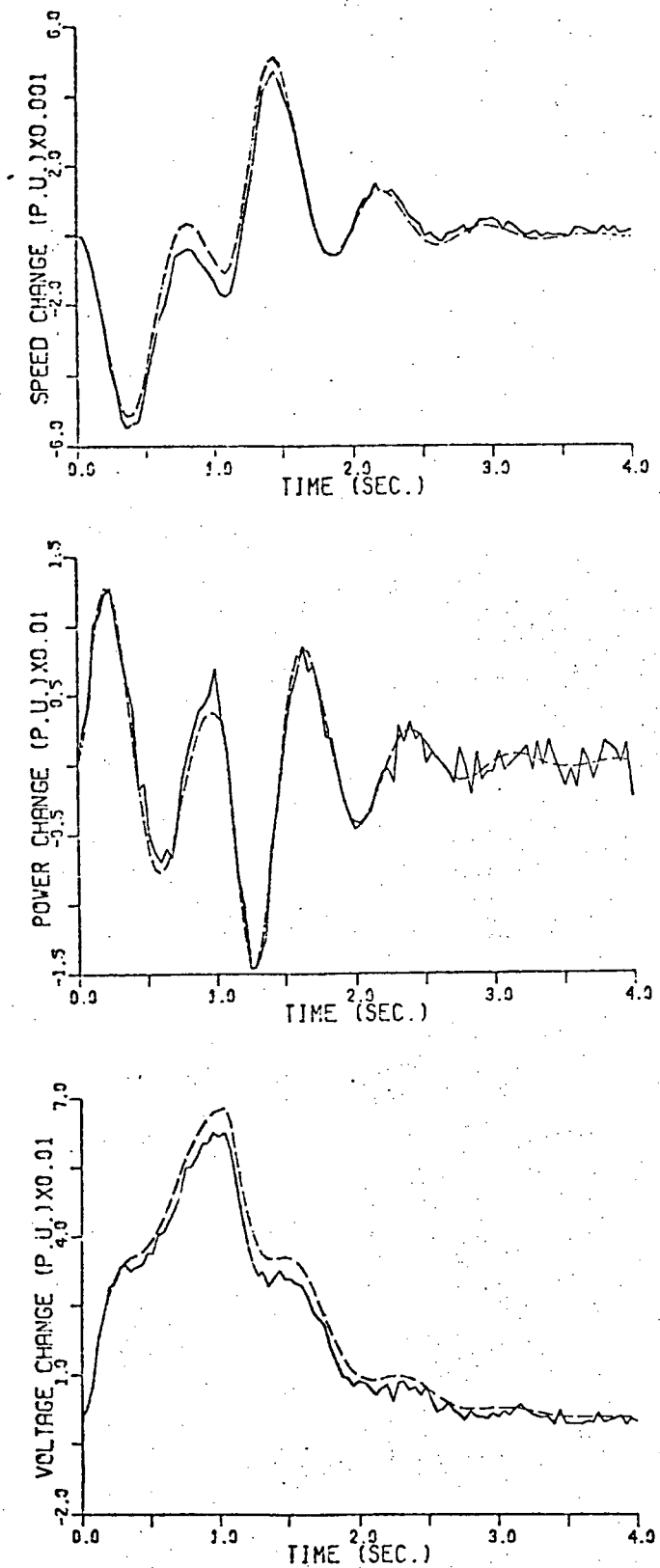

Fig. 4.18 Responses of test system 1 with noise added to the original system responses.

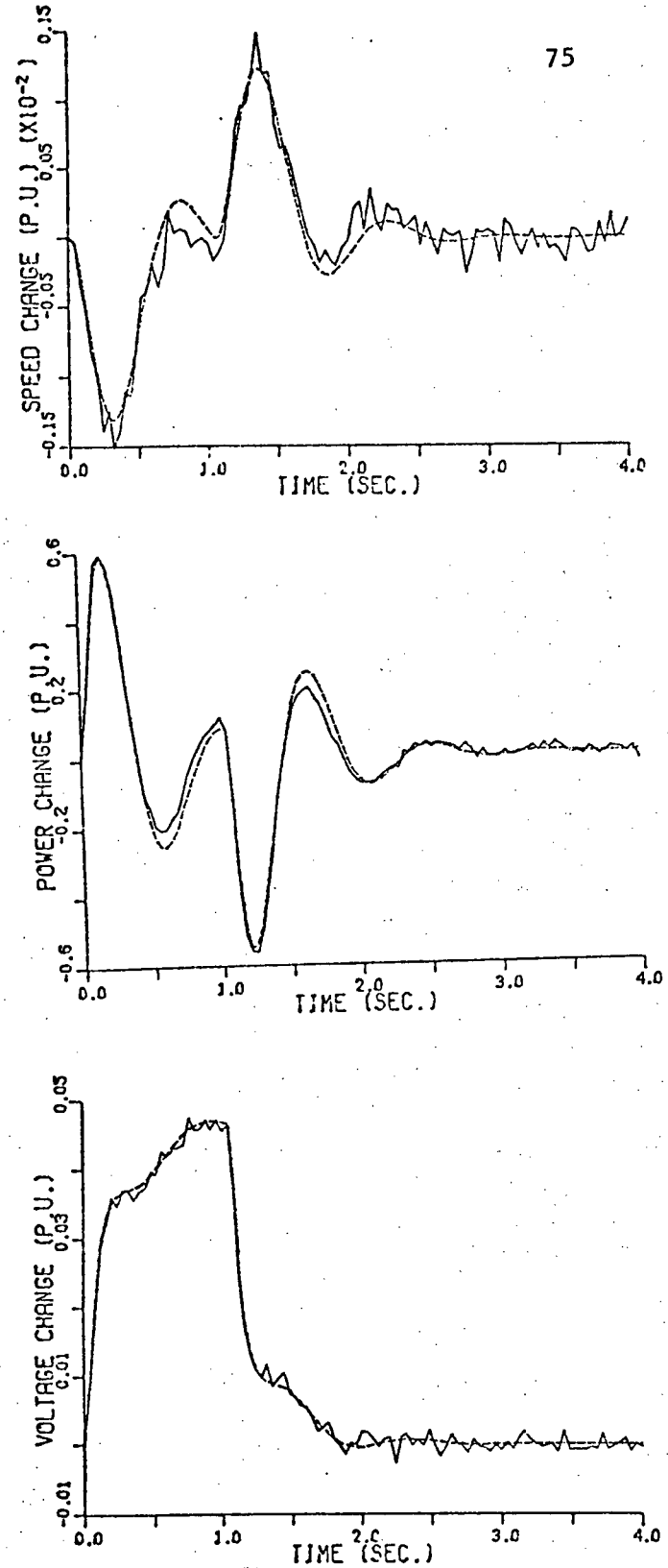

Fig. 4.19 Responses of test system 2 with noise added to the original system responses.

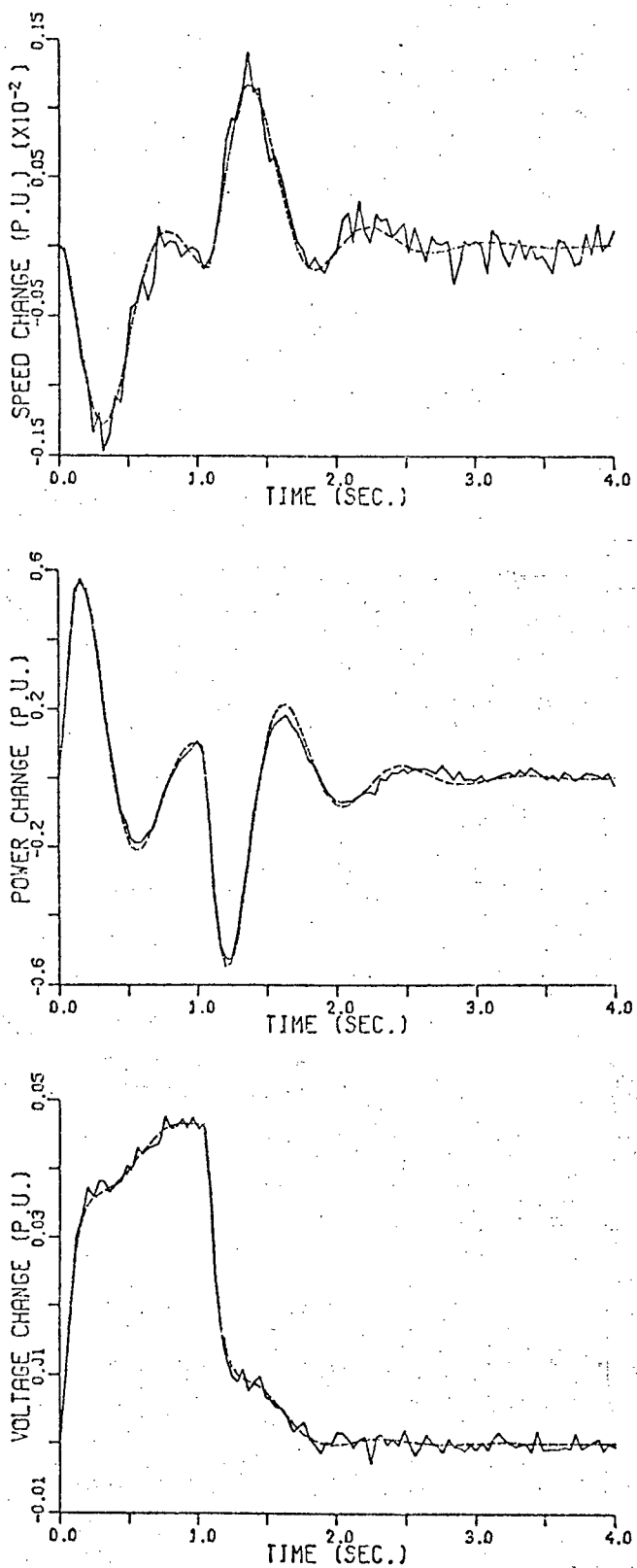

Fig. 4.20 Responses of test system 3 with noise added to the original system responses.

3) The step size.

4) The initial guess of the unknown parameters.

The number of dynamic equivalent machines is decided by how many machines of the study system are of great concern. The model of equivalent machines are chosen from off-line identification so that the estimated parameters are unique. The step size cannot be freely chosen and must be constrained as suggested in the earlier part of this thesis. Therefore, the most important factor for reducing the computational time for on-line identification is the initial guess. The number of iterations can be greatly reduced if the initial guess is close to the final value.

Based on these considerations, it is suggested that the identification may proceed in two steps.

Step 1, Off-Line Identification: When no prior information of the external equivalent system is available. It is a relatively long computational process in which the topology of the external system is hypothesized and the equivalent model is chosen. The initial guess of the equivalent model parameters could be far from the final value.

Step 2, On-Line Identification: The computational time process could be very short after step 1; the off-line identification. The dynamic equivalent can be frequently updated, where the identified parameters from the off-line process can be used as the initial guess, even if there is relatively major change in the external system.

To demonstrate the feasibility of on-line identification, major change is assumed in the external system of test system 1, the transmission line connecting machine #4 to the boundary bus is assumed to be double line,

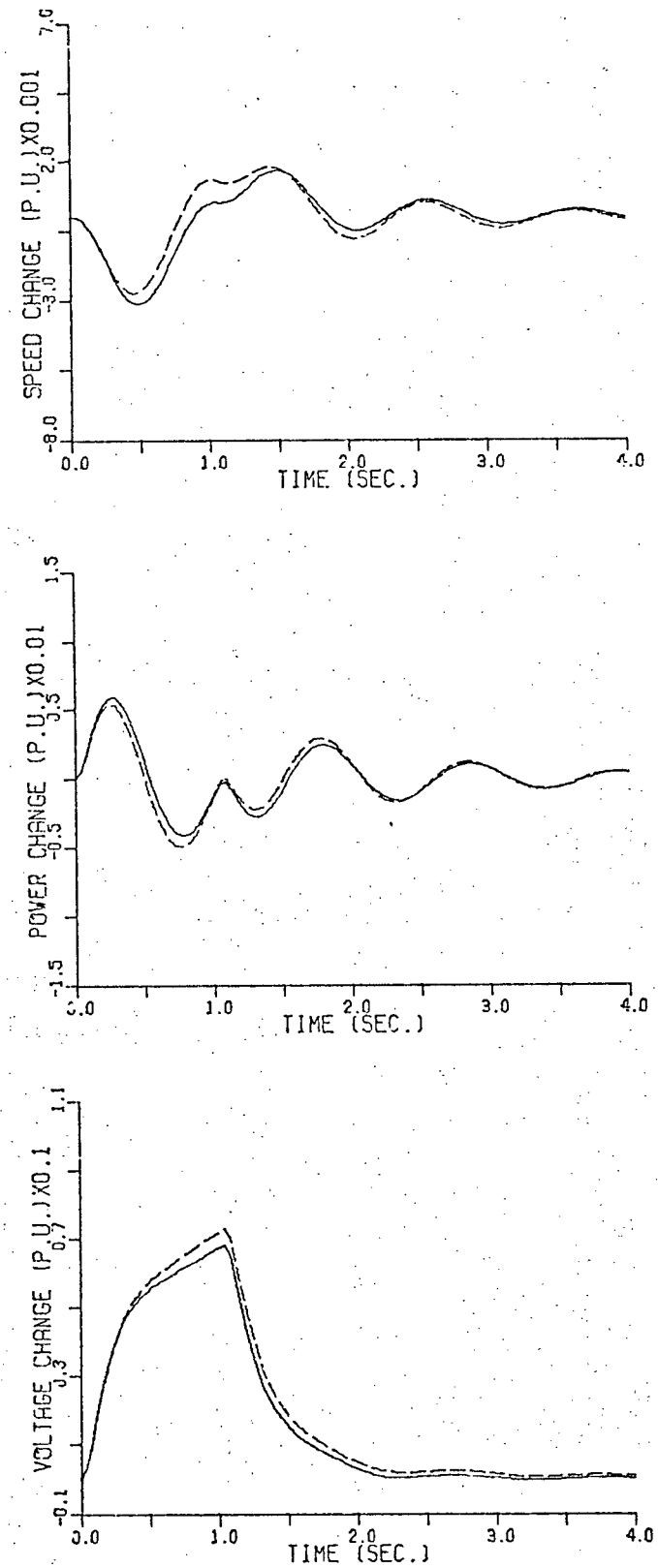

Fig. 4.21 Responses of test system 1 after updating the dynamic equivalent.

one of them is tripped off due to a three phase fault. The dynamic equivalent of the external system is no longer the same as prefault. To update the dynamic equivalent parameters, the prefault estimated values are used as the initial guesses. Table 4.15 shows the updated parameters, it takes only six iterations for the identification. The responses of machine #1 due to pulsed excitation are shown in Fig. 4.21. The solid line is for the original system response while the dashed line is for the dynamic equivalent system response.

Table 4.15 Parameter updating of test system 1

	Parameter values before tripping off	After tripping off
M_{E1}	9.95	9.456
ζ_{E1}	0.1207	0.1323
X'_{dE1}	0.5725	0.5539
X_{dE1}	2.198	3.942
T'_{doE}	5.36	5.605

4-9 Conclusions of Chapter 4

From the case studies in this chapter, the following conclusions may be drawn:

1) The dynamic equivalent can be uniquely estimated with proper choice for the equivalent model.
2) Regardless of the location of the disturbed machine in the study system, the external dynamic equivalent is unique.
3) Different types of disturbances can be used to estimate the dynamic equivalent, and the results are unique.

4) The white measurement noise does not create problems for the identification.

5) The load fluctuations in power systems can be ignored when the effect of an intentional disturbance is much larger than these fluctuations.

6) On-line identification can be expedited when the parameter values from off-line identification are used as the initial guess. The dynamic equivalent can be frequently updated.

5. VERIFICATION OF THE VALIDITY OF THE EQUIVALENTS

In Chapter 4, the structure of the equivalent system has been hypothesized, and its parameters have been identified. Although the machine responses of the original system and the dynamic equivalent system due to the intentional disturbance are in good agreement, more verifications to show the validity of the dynamic equivalent are necessary.

Three more proofs of the validity of the estimated dynamic equivalent are provided in this thesis:

1) The K_{1ii}, ---, K_{6ii} constants of the study system machines are almost equal whether computed from the original or the equivalent system parameters.
2) The electric torques of the study system machines simulated from the original and dynamic equivalent systems are in good agreement.
3) The study system machines' responses of the original and dynamic equivalent systems due to a severe fault within the study system are in good agreement. A three-phase fault is tested on each machine bus of the study system for all cases.

All these are aiming to prove the equivalents estimated by the techniques developed in this thesis are valid. However, in power industry the K constants of the original system cannot be calculated unless full information of the external system is known, and the three-phase short-circuit test is not recommended for engineering practice.

5.1 Model Constants of the Study System

The constants of a machine model in multi-machine power system depend upon the configuration and parameters of the entire system. When the external system is replaced by an equivalent, the state variables and self constants of the model will be altered, unless the external equivalent system has the same effect as the original external system.

The measured variables of the i-th machine used for identification are speed $\Delta\omega_i$, power ΔP_{ei} and voltage ΔV_i. The state variables of the i-th machine are either directly measured or function of the measurements. Since the original and the dynamic equivalent systems responses are in good agreement, so will be the state variables $\Delta\omega_i$, $\Delta\delta_i$, ΔE_{fdi} and $\Delta E'_{qi}$ of the i-th machine of the study system, because

$$\Delta\tilde{\omega}_i \simeq \Delta\omega_i \quad ; \text{ measured variable}$$

$$\Delta\tilde{\delta}_i \simeq \Delta\delta_i \quad ; \Delta\delta_i = \Delta\omega_i/S$$

$$\Delta\tilde{E}_{fdi} \simeq \Delta E_{fdi} \quad ; \Delta E_{fdi} = -\Delta V_i \, KA_i/(1+S\,TA_i)$$

$$\Delta\tilde{E}'_{qi} \simeq \Delta E'_{qi}$$

Some elaboration of the last equation is necessary. Since

$$P_{ei} = [E'_{qi} \, V_i \sin \delta_i / x'_{di}] + [(x'_{di} - x_{qi}) \, V_i^2 \sin 2\,\delta_i / (2\, x'_{di} \, x_{qi})]$$

$$\Delta P_{ei} = C_1 \, \Delta E'_{qi} + C_2 \, \Delta V_i + C_3 \, \Delta\delta_i$$

and

$$\Delta\tilde{P}_{ei} = C_1 \, \Delta\tilde{E}'_{qi} + C_2 \, \Delta\tilde{V}_i + C_3 \, \Delta\tilde{\delta}_i$$

Therefore,

$$\Delta\tilde{E}'_{qi} \simeq \Delta E'_{qi}$$

C_1, C_2 and C_3 are functions of the i-th machine parameters and steady state values.

The machine's self constants $K1_{ii}$, ---, $K6_{ii}$ have been found in Chapter 2, equation (2.32). For simplicity, these constants can be rewritten assuming a cylindrical rotor machine where x_d equals x_q and E'_q equals the voltage behind transient reactance [30], as follows:

$$
\begin{aligned}
K1_{ii} &= E'_{qi} \sum_{j\neq i} E'_{qj}\, Y_{ij}\, S_{ij} \\
K2_{ii} &= I_{qi} + E'_{qi}\, Y_{ii}\, C_{ii} \\
K3_{ii} &= [1 - (x_{di}-x'_{di})\, Y_{ii}\, S_{ii}]^{-1} \\
K4_{ii} &= (x_{di}-x'_{di}) \sum_{j\neq i} E'_{qj}\, Y_{ij}\, C_{ij} \\
K5_{ii} &= -x'_{di}\, [V_{di} \sum_{j\neq i} E'_{qj}\, Y_{ij}\, S_{ij} + V_{qi} \sum_{j\neq i} E'_{qj}\, Y_{ij}\, C_{ij}]/V_i \\
K6_{ii} &= [V_{di}\, x'_{di}\, Y_{ii}\, C_{ii} + V_{qi}\, (1 + x'_{di}\, Y_{ii}\, S_{ii})]/V_i
\end{aligned}
\tag{5.1}
$$

where Y_{ii} can be found from (2.17a).

Since current equations of the i-th machine can be expressed by the form

$$
\begin{aligned}
I_{di} &= E'_{qi}\, Y_{ii}\, S_{ii} + \sum_{j\neq i} E'_{qj}\, Y_{ij}\, S_{ij} \\
I_{qi} &= E'_{qi}\, Y_{ii}\, C_{ii} + \sum_{j\neq i} E'_{qj}\, Y_{ij}\, C_{ij}
\end{aligned}
\tag{5.2}
$$

$K1_{ii}$, ---, $K6_{ii}$ can also be rewritten

$$K1_{ii} = E'_{qi}\, (I_{di} - E'_{qi}\, Y_{ii}\, S_{ii}) \tag{5.3a}$$

$$K2_{ii} = I_{qi} + E'_{qi}\, Y_{ii}\, C_{ii} \tag{5.3b}$$

$$K3_{ii} = [1 - (x_{di}-x'_{di})\, Y_{ii}\, S_{ii}]^{-1} \tag{5.3c}$$

$$K4_{ii} = (x_{di}-x'_{di})(I_{qi} - E'_{qi}\, Y_{ii}\, C_{ii}) \tag{5.3d}$$

$$K5_{ii} = x'_{di}\, [V_{di}\, E'_{qi}\, Y_{ii}\, S_{ii} + V_{qi}\, E'_{qi}\, Y_{ii}\, C_{ii} - P_{ei}]/V_i \tag{5.3e}$$

$$K6_{ii} = [x'_{di}\, V_{di}\, Y_{ii}\, C_{ii} + V_{qi}\, (1-x'_{di}\, Y_{ii}\, S_{ii})]/V_i \tag{5.3f}$$

where

$$P_{ei} = V_{di} I_{di} + V_{qi} I_{qi}$$

As shown from equations (5.3), $K1_{ii}$, ---, $K6_{ii}$ of the study system machine of the original and dynamic equivalent systems will agree if the following condition is satisfied.

$$\tilde{Y}_{ii} e^{j\beta_{ii}} \simeq Y_{ii} e^{j\beta_{ii}} \tag{5.4}$$

or

$$\tilde{Y}_{ii} \tilde{S}_{ii} \simeq Y_{ii} S_{ii} \tag{5.5}$$

and

$$\tilde{Y}_{ii} \tilde{C}_{ii} \simeq Y_{ii} C_{ii} \tag{5.6}$$

Y_{ii} of equation (2.17a) is composed of impedances and transient reactances of the entire original system, and $\tilde{Y}_{ii}$ composed of those of the entire equivalent system.

The condition of equation (5.5) can be obtained by comparing the speed-torque relation of the i-th machine in the two systems, Fig. 5.1. Since $\Delta\tilde{\omega}_i$ and $\Delta\tilde{T}_i$ match $\Delta\omega_i$ and ΔT_i, respectively, $\tilde{D}_i$ and D_i must be in good agreement, which is apparent from a comparison of Fig. 6.1 (a) and (b).

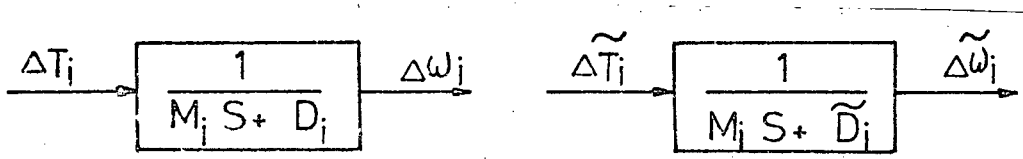

(a) Original system (b) Dynamic equivalent system

Fig. 5.1 Speed-torque relation

Since

$$D_i^2 = (2\,\zeta_i)^2\,\omega_o\,K1_{ii}\,M_i \tag{5.7}$$

and

$$\tilde{D}_i^2 = (2\,\zeta_i)^2\,\omega_o\,\tilde{K1}_{ii}\,M_i \tag{5.8}$$

hence

$$\tilde{K1}_{ii} \simeq K1_{ii}$$

Therefore, from (5.3a), $\tilde{Y}_{ii}\,\tilde{S}_{ii}$ equals $Y_{ii}\,S_{ii}$, consequently (5.5) is valid.

The condition of equation (5.6) can also be obtained by comparing the internal voltage $\Delta E'_{qi}$ of the two systems, Fig. 5.2. Since the voltage regulator effect is usually much larger than the other dynamic interacting

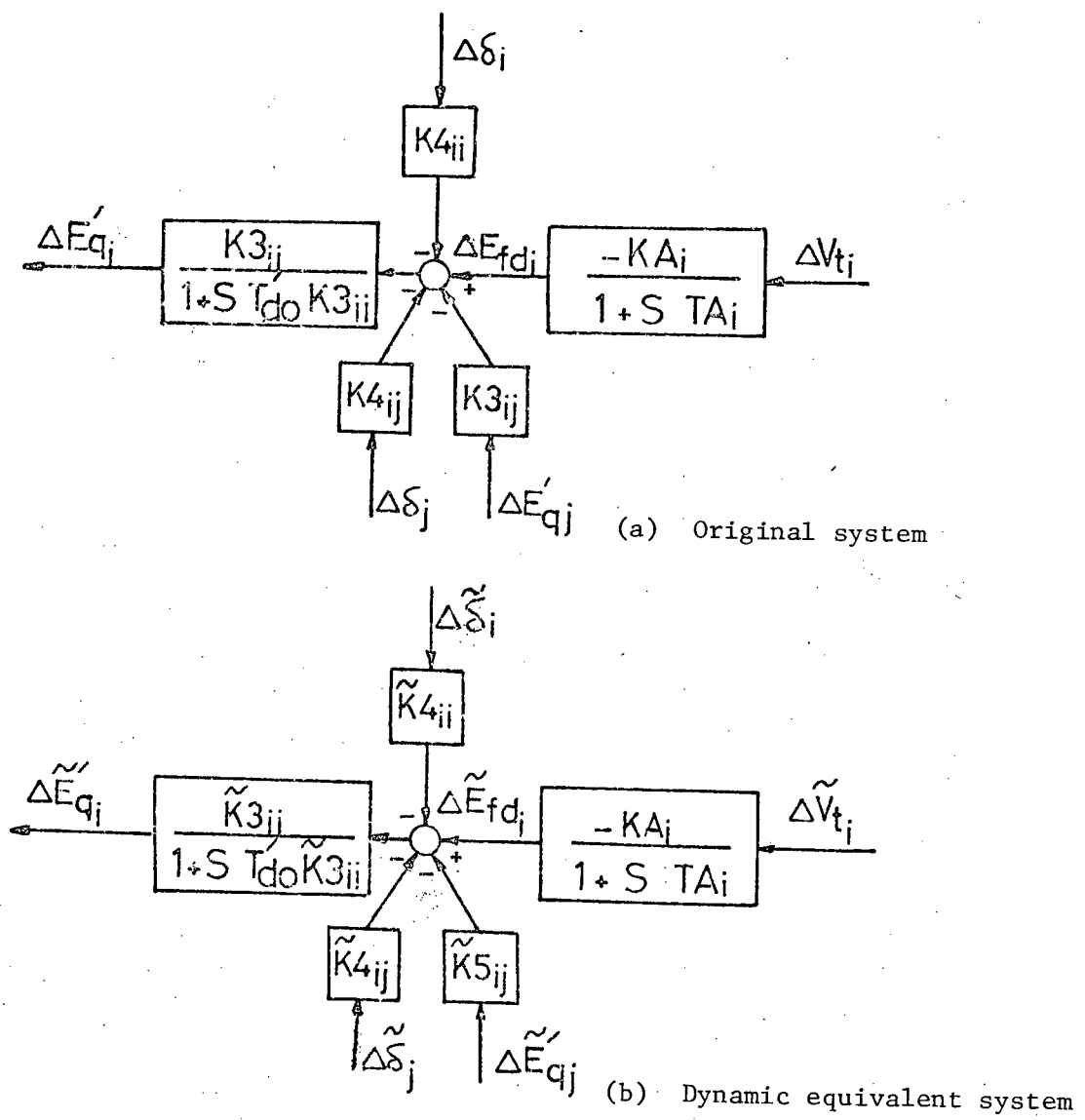

Fig. 5.2 Internal voltage representation

effect through $K3_{ij}$ and $K4_{ij}$, the internal voltage equations of the two systems can be approximated by

$$\Delta E'_{qi} \simeq K3_{ii} (\Delta E_{fdi} - K4_{ii} \Delta\delta_i)/(1+S\ T'_{doi}\ K3_{ii}) \qquad (5.9)$$

$$\Delta \tilde{E}_{qi} \simeq \tilde{K}3_{ii} (\Delta \tilde{E}_{fdi} - \tilde{K}4_{ii} \tilde{\Delta}\delta_i)/(1+S\ T'_{doi}\ \tilde{K}3_{ii}) \qquad (5.10)$$

Since $\tilde{K}3_{ii}$ approximately equals $K3_{ii}$ according to equations (5.3c) and (5.5), $\tilde{K}4_{ii}$ approximately equals $K4_{ii}$ according to equations (5.9) and (5.10), hence $\tilde{Y}_{ii}\ \tilde{C}_{ii}$ approximately equals $Y_{ii}\ C_{ii}$ according to equation (5.3d).

Since the relation given by (5.5) and (5.6) are proven to be true, all the model constants $K1_{ii}$, ---, $K6_{ii}$ (5.3) of the original and dynamic equivalent systems must be in good agreement. Tables 5.1, 5.2 and 5.3 show the calculated results of the study system constants, of the original system and the dynamic equivalent system, for test systems 1, 2 and 3, respectively.

Table 5.1 Constants of test system 1

	Machine #1		Machine #2	
	Original System	Dynamic Equivalent System	Original System	Dynamic Equivalent System
K1	0.0809	0.0810	0.1440	0.1470
K2	0.1201	0.1210	0.1302	0.1305
K3	0.2311	0.2313	0.4205	0.4200
K4	1.6013	1.6033	0.7100	0.7150
K5	0.0590	0.0580	-0.0045	-0.0051
K6	0.2111	0.1980	0.6419	0.6421

Table 5.2 Constants of test system 2

	Machine #1		Machine #2	
	Original System	Dynamic Equivalent System	Original System	Dynamic Equivalent System
K1	9.7551	9.9010	5.1271	5.1501
K2	11.0510	11.0071	2.6520	2.5613
K3	0.2682	0.2711	0.2431	0.2405
K4	1.4721	1.5051	0.5101	0.5031
K5	0.1165	0.1201	0.0069	0.0091
K6	0.5711	0.5645	0.3112	0.2945

Table 5.3 Constants of test system 3

	Machine #1		Machine #2		Machine #3	
	Original System	Dynamic Equivalent System	Original System	Dynamic Equivalent System	Original System	Dynamic Equivalent System
K1	9.7551	9.6212	5.1271	5.1351	6.931	6.2212
K2	11.0510	11.0023	2.6520	2.5612	8.5310	8.1121
K3	0.2682	0.2711	0.2431	0.2461	0.4205	0.4611
K4	1.4721	1.4451	0.5101	0.4962	0.8121	0.7953
K5	0.1165	0.1185	0.0069	0.0089	-0.018	-0.028
K6	0.5711	0.5645	0.3112	0.3182	0.4781	0.5421

The K_{ii} constants of the study system machines of the original system are in good agreement with those of the dynamic equivalent systems.

5-2 The Electric Torques

The electric torque of the i-th machine in a multi-machine power system consists of two parts, electric torque generated by the machine itself, and dynamic interacting torque due to other machines in the system. Each torque has two components, the synchronizing component in phase with the

torque angle, and damping component in phase with the speed. The performance and stability of the i-th machine depend very much upon these torque components; the electric torques of the study system machines of the original and dynamic equivalent systems must be in good agreement; i.e. the external equivalent system has the same dynamic interacting effect on the study system as the original external system.

The equations for the electric torque components are included in the Appendix. Computer simulated results of the study system electric torque components of the original and dynamic equivalent systems are given in Tables 5.4, 5.5 and 5.6 for test systems 1, 2 and 3, respectively. The values are simulated for the systems oscillation frequency of about 1.0 Hz.

5-3 Three-Phase Fault Test

Although the dynamic equivalent system proves valid for the intentional disturbance used for identification, it is necessary to be given a more severe test. The contingency chosen for the test is a three-phase short circuit for six cycles in the study system at a different location each time. The dynamic responses of the equivalent system from computer simulation are compared with those of the original system. Also included for comparison are the responses with the external system approximated by infinite buses. When the fault is assumed at specific machine bus in the study system, not only the responses of this machine are observed but also the responses of all other machines in the study system. The tests are identified in Table 5.7.

The test results are shown in Figs. 5.3 to 5.19; the original system response is the solid line, the dynamic equivalent response is the dotted line and the infinite bus equivalent response is the dashed line.

Table 5.4 Electric torques of test system 1

	Machine #1		Machine #2	
	Original System	Dynamic Equivalent System	Original System	Dynamic Equivalent System
Self-damping torque	0.02795 $\Delta\delta_1$	0.02774 $\Delta\delta_1$	0.02774 $\Delta\delta_2$	0.02699 $\Delta\delta_2$
Interacting damping torque	0.00359 $\Delta\delta_1$	0.00313 $\Delta\delta_1$	0.00824 $\Delta\delta_2$	0.00783 $\Delta\delta_2$
Total damping torque	0.03154 $\Delta\delta_1$	0.03087 $\Delta\delta_1$	0.03598 $\Delta\delta_2$	0.03482 $\Delta\delta_2$
Self-synchronizing torque	0.07097 $\Delta\delta_1$	0.07233 $\Delta\delta_1$	0.1414 $\Delta\delta_2$	0.1456 $\Delta\delta_2$
Interacting synchronizing torque	0.00319 $\Delta\delta_1$	0.00332 $\Delta\delta_1$	0.01797 $\Delta\delta_2$	0.01810 $\Delta\delta_2$
Total synchronizing torque	0.07416 $\Delta\delta_1$	0.07565 $\Delta\delta_1$	0.15937 $\Delta\delta_2$	0.1637 $\Delta\delta_2$

Table 5.5 Electric torque of test system 2

	Machine #1		Machine #2	
	Original System	Dynamic Equivalent System	Original System	Dynamic Equivalent System
Self-damping torque	4.3740 $\Delta\delta_1$	4.4443 $\Delta\delta_1$	2.1934 $\Delta\delta_2$	2.2514 $\Delta\delta_2$
Interacting damping torque	1.2034 $\Delta\delta_1$	1.1659 $\Delta\delta_1$	0.9203 $\Delta\delta_2$	0.8977 $\Delta\delta_2$
Total damping torque	5.5774 $\Delta\delta_1$	5.6102 $\Delta\delta_1$	3.1137 $\Delta\delta_2$	3.1491 $\Delta\delta_2$
Self-synchronizing torque	8.027 $\Delta\delta_1$	8.081 $\Delta\delta_1$	5.0079 $\Delta\delta_2$	5.1192 $\Delta\delta_2$
Interacting synchronizing torque	-0.4997 $\Delta\delta_1$	-0.5112 $\Delta\delta_1$	-0.5593 $\Delta\delta_2$	-0.5813 $\Delta\delta_2$
Total synchronizing torque	7.5273 $\Delta\delta_1$	7.5698 $\Delta\delta_1$	4.4486 $\Delta\delta_2$	4.5379 $\Delta\delta_2$

Table 5.6 Electric torque of test system 3

	Machine #1		Machine #2		Machine #3	
	Original System	Dynamic Equivalent System	Original System	Dynamic Equivalent System	Original System	Dynamic Equivalent System
Self-damping torque	4.3740 $\Delta\delta_1$	4.3722 $\Delta\delta_1$	2.1934 $\Delta\delta_2$	2.2005 $\Delta\delta_2$	2.5643 $\Delta\delta_3$	2.2345 $\Delta\delta_3$
Interacting damping torque	1.2034 $\Delta\delta_1$	1.1343 $\Delta\delta_1$	0.9203 $\Delta\delta_2$	0.9120 $\Delta\delta_2$	1.37309 $\Delta\delta_3$	1.3652 $\Delta\delta_3$
Total damping torque	5.5774 $\Delta\delta_1$	5.5065 $\Delta\delta_1$	3.1137 $\Delta\delta_2$	3.1125 $\Delta\delta_2$	3.9374 $\Delta\delta_3$	3.5997 $\Delta\delta_3$
Self synchronizing torque	8.027 $\Delta\delta_1$	8.030 $\Delta\delta_1$	5.0079 $\Delta\delta_2$	5.011 $\Delta\delta_2$	7.060 $\Delta\delta_3$	6.6586 $\Delta\delta_3$
Interacting synchronizing torque	-0.4997 $\Delta\delta_1$	-0.4547 $\Delta\delta_1$	-0.5593 $\Delta\delta_2$	-0.5237 $\Delta\delta_2$	-0.8374 $\Delta\delta_3$	-0.6152 $\Delta\delta_3$
Total synchronizing torque	7.5273 $\Delta\delta_1$	7.5753 $\Delta\delta_1$	4.4486 $\Delta\delta_2$	4.4873 $\Delta\delta_2$	6.2226 $\Delta\delta_3$	6.0434 $\Delta\delta_3$

Table 5.7 Three-phase fault tests

Test System	Fault Location	Machine Responses
1	Machine bus #1	Machine #1 (Case A) Machine #2 (Case B)
	Machine bus #2	Machine #1 (Case C) Machine #2 (Case D)
2	Machine bus #1	Machine #1 (Case E) Machine #2 (Case F)
	Machine bus #2	Machine #1 (Case G) Machine #2 (Case H)
3	Machine bus #1	Machine #1 (Case I) Machine #2 (Case J) Machine #3 (Case K)
	Machine bus #2	Machine #1 (Case L) Machine #2 (Case M) Machine #3 (Case N)
	Machine bus #3	Machine #1 (Case O) Machine #2 (Case P) Machine #3 (Case Q)

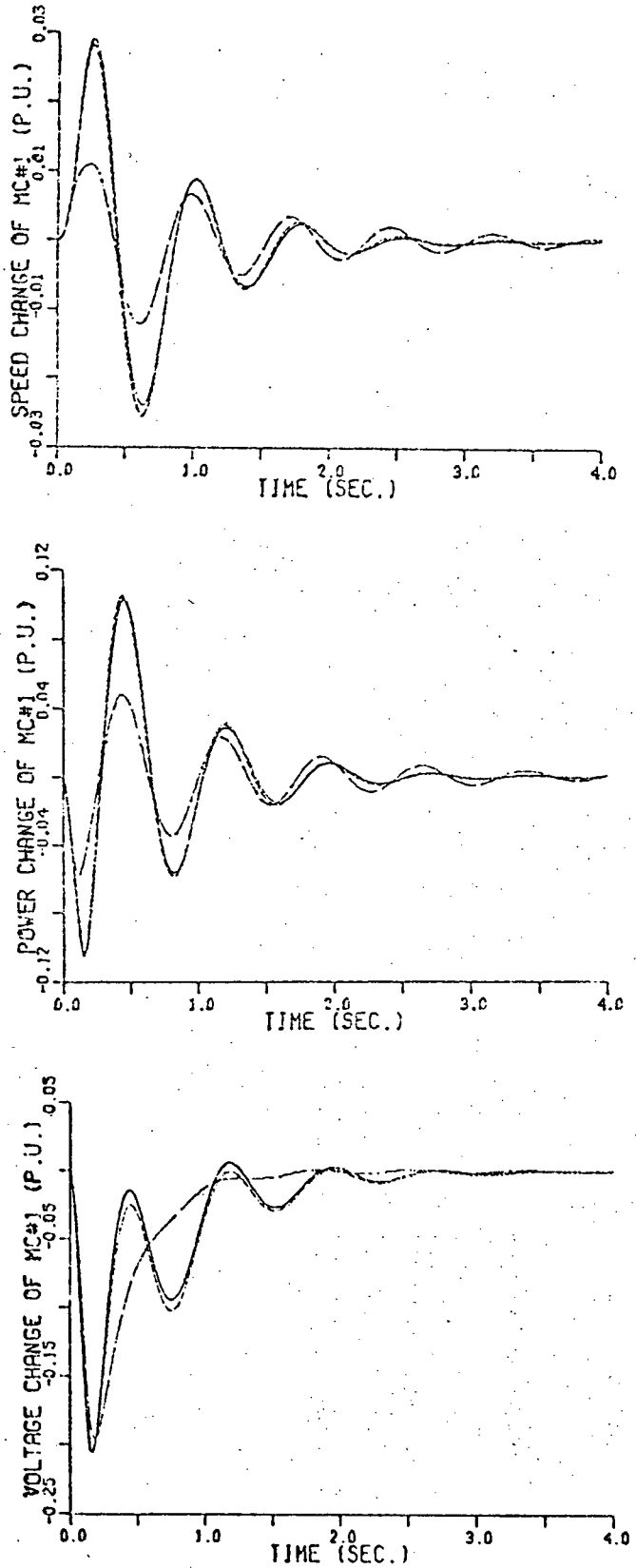

Fig. 5.3 Responses of Case A

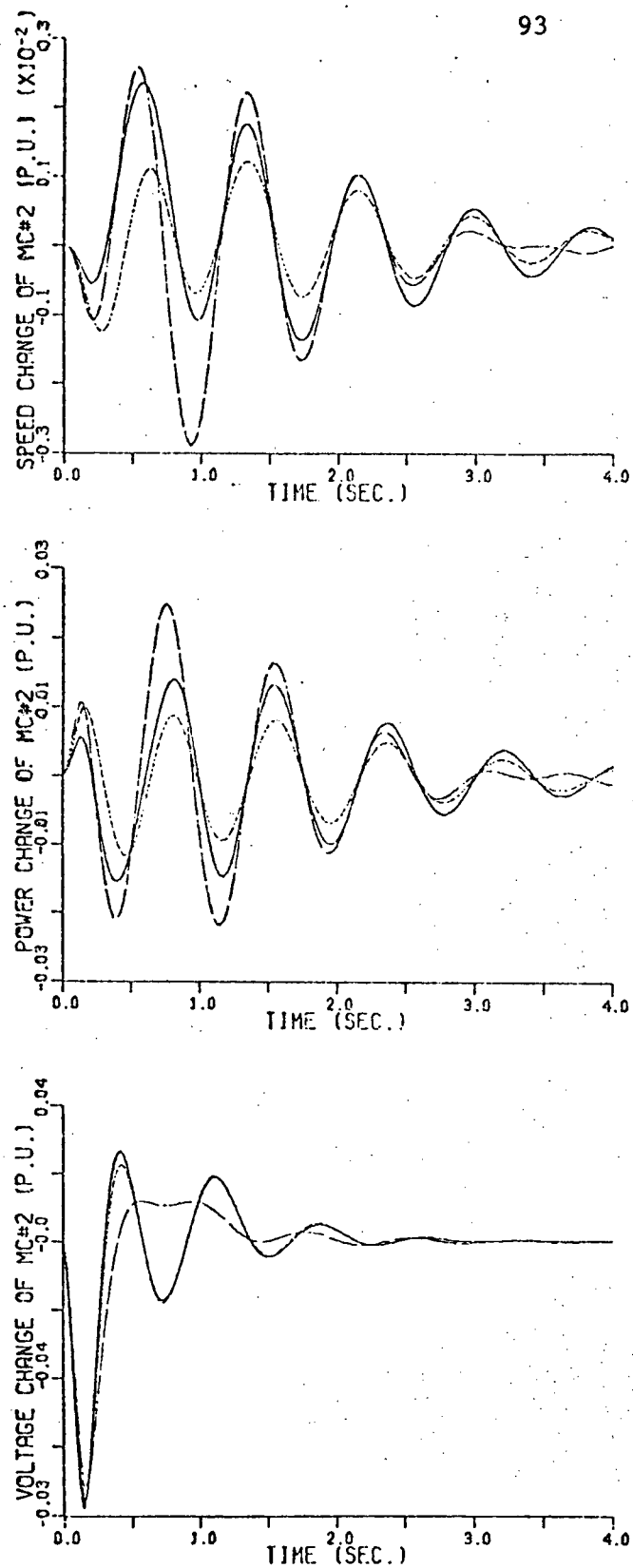

Fig. 5.4 Responses of Case B

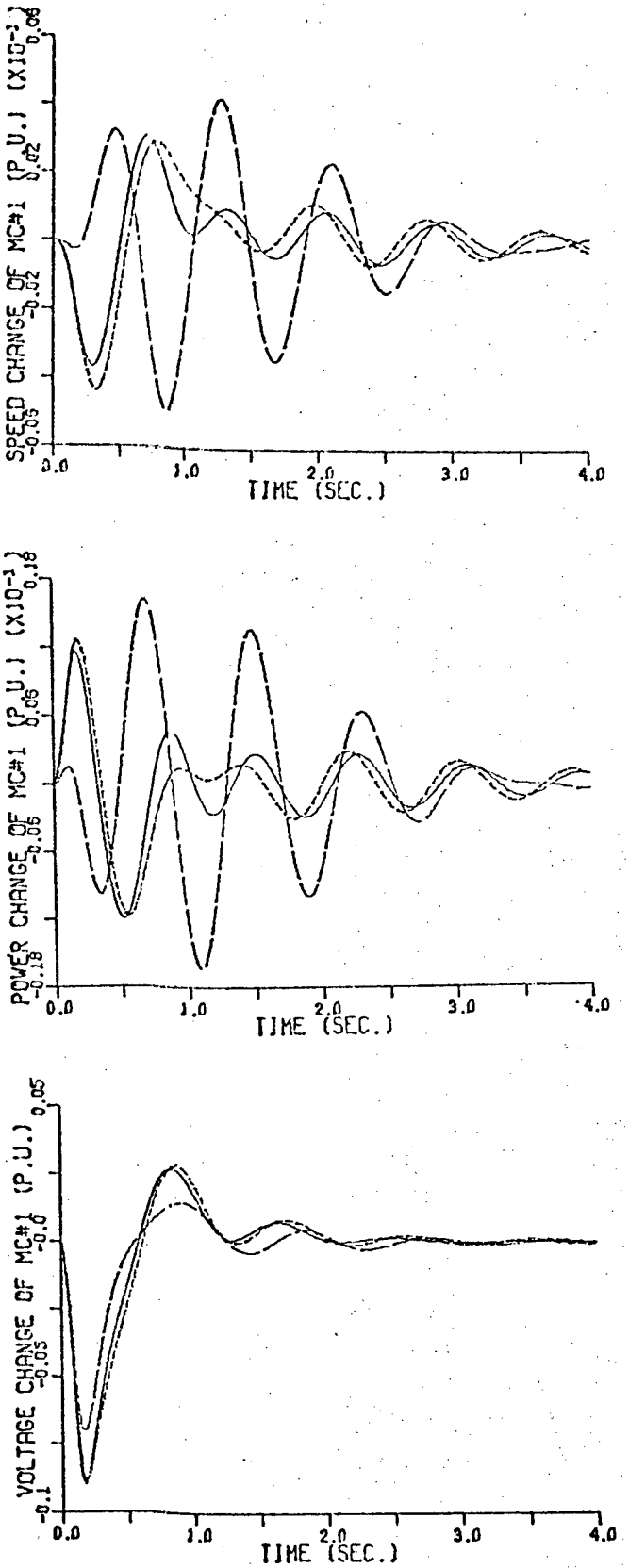

Fig. 5.5 Responses of Case C

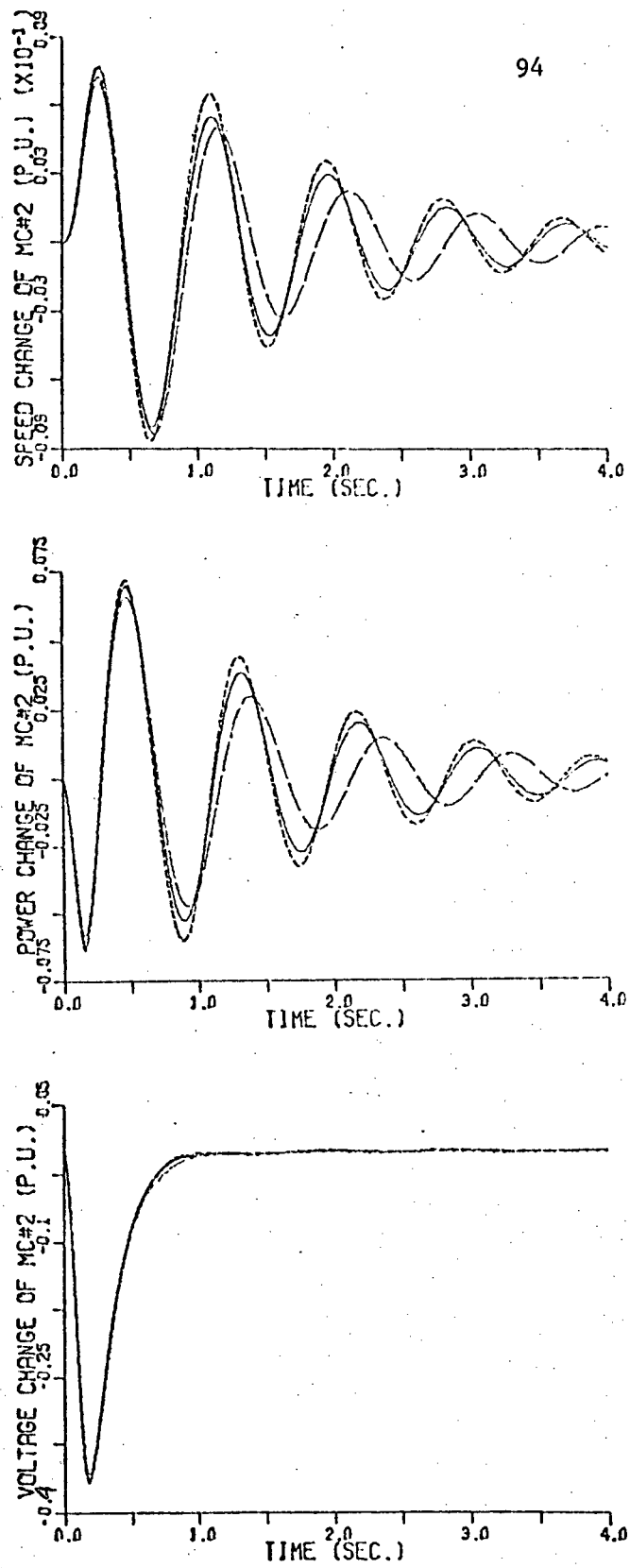

Fig. 5.6 Responses of Case D

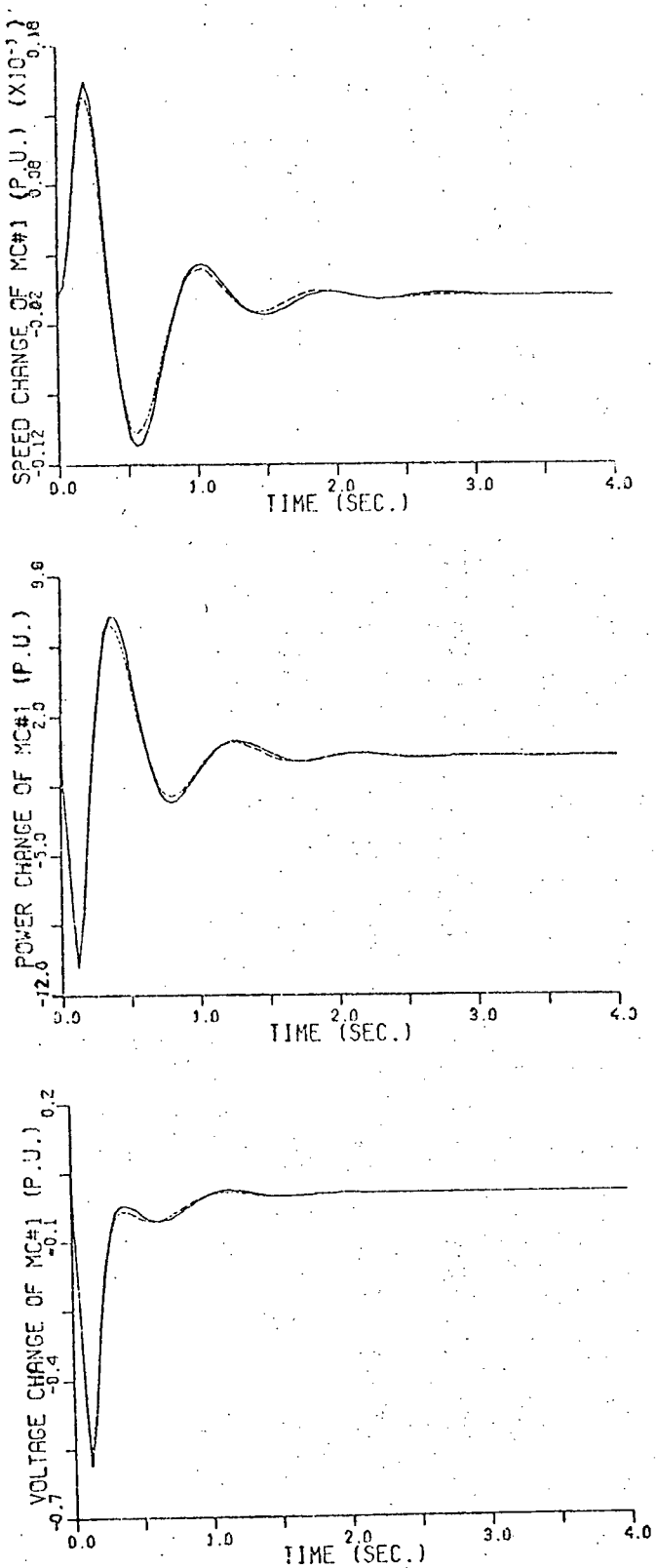

Fig. 5.7 Responses of Case E

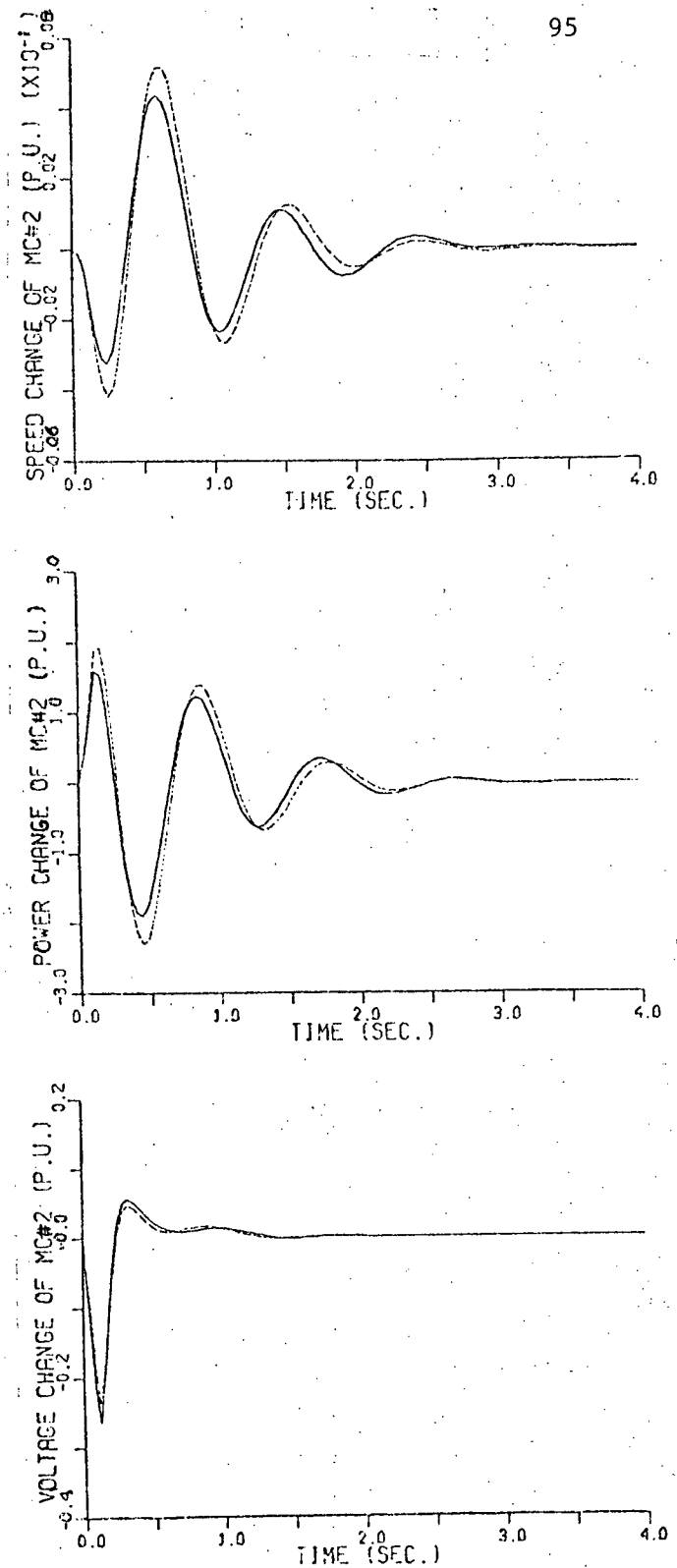

Fig. 5.8 Responses of Case F

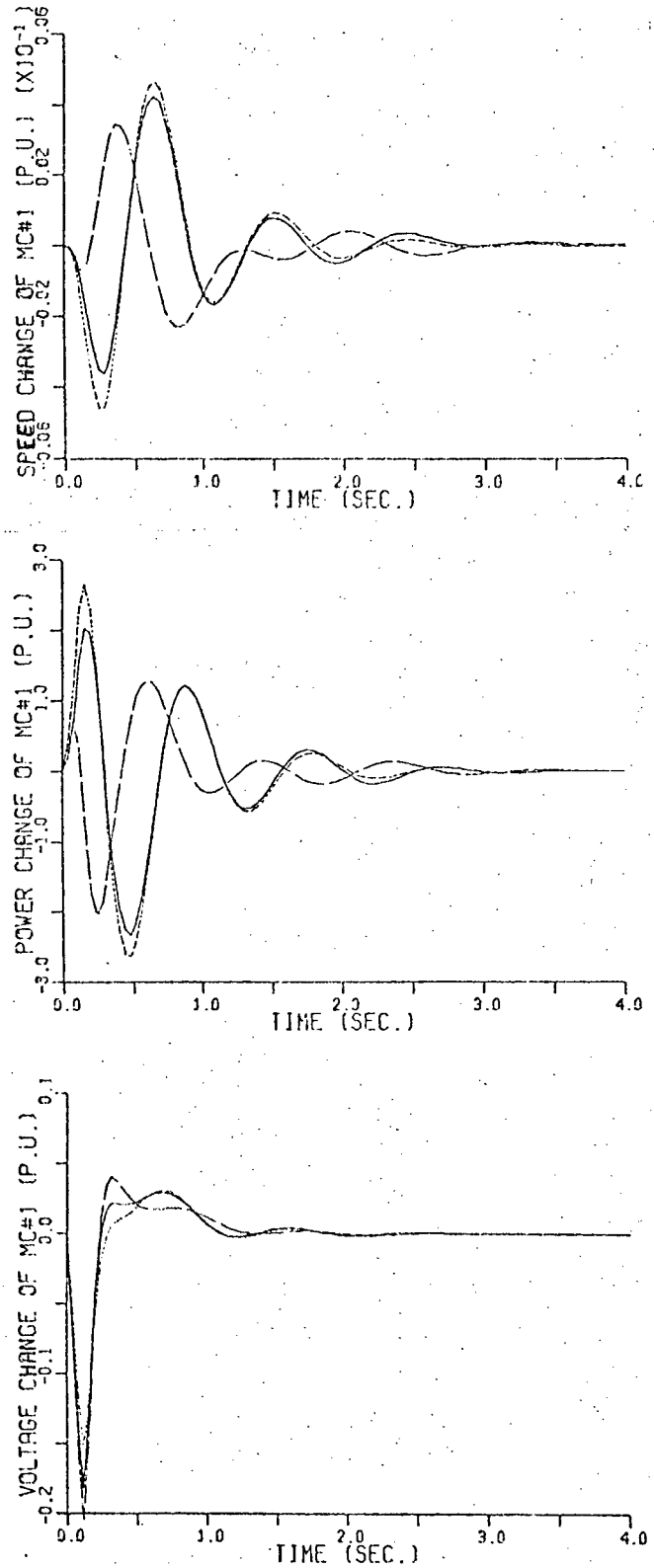

Fig. 5.9 Responses of Case G

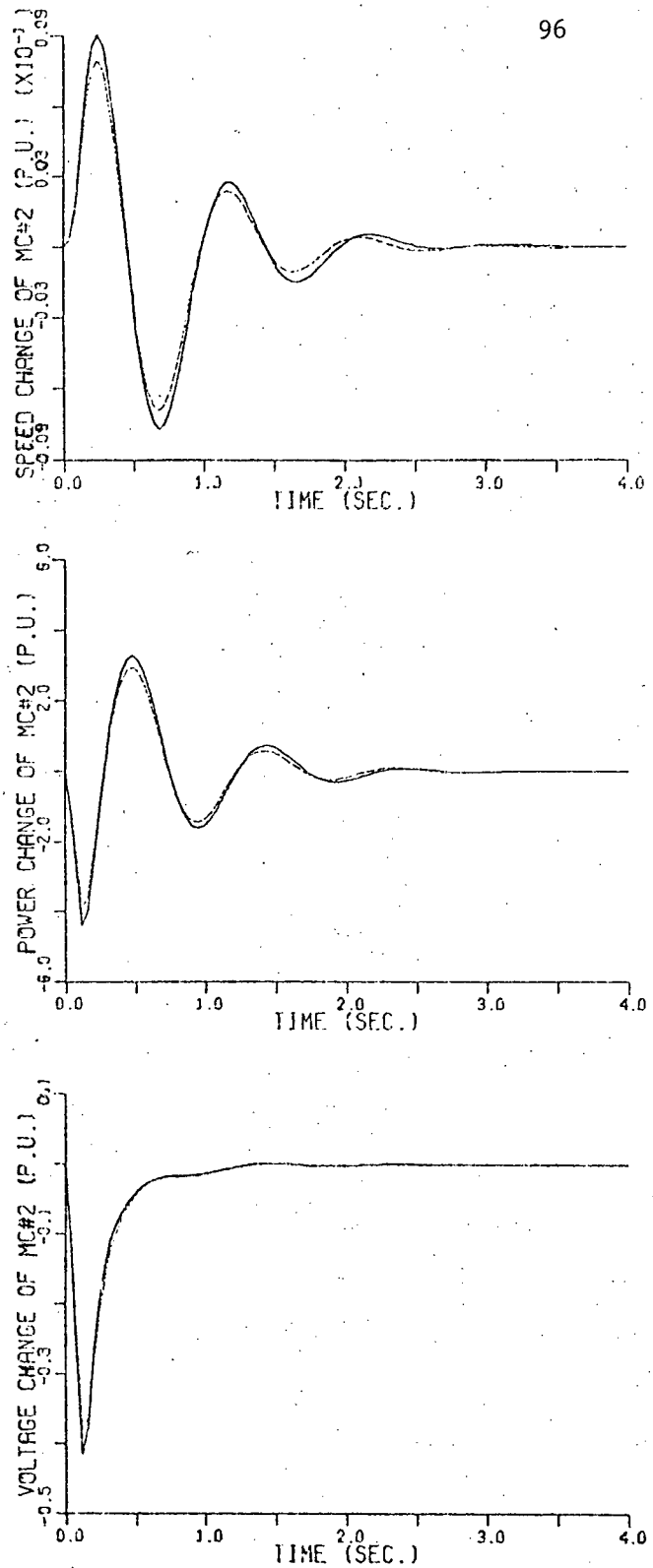

Fig. 5.10 Responses of Case H

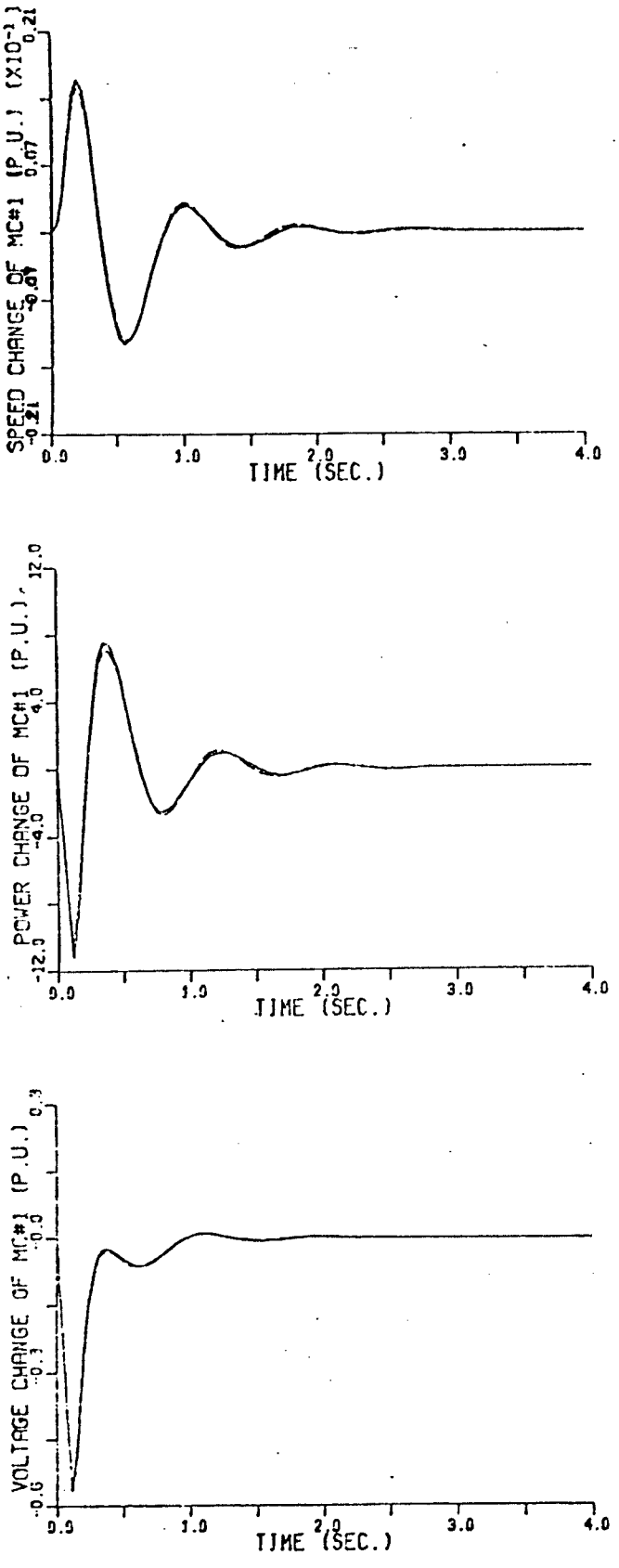

Fig. 5.11 Responses of Case I

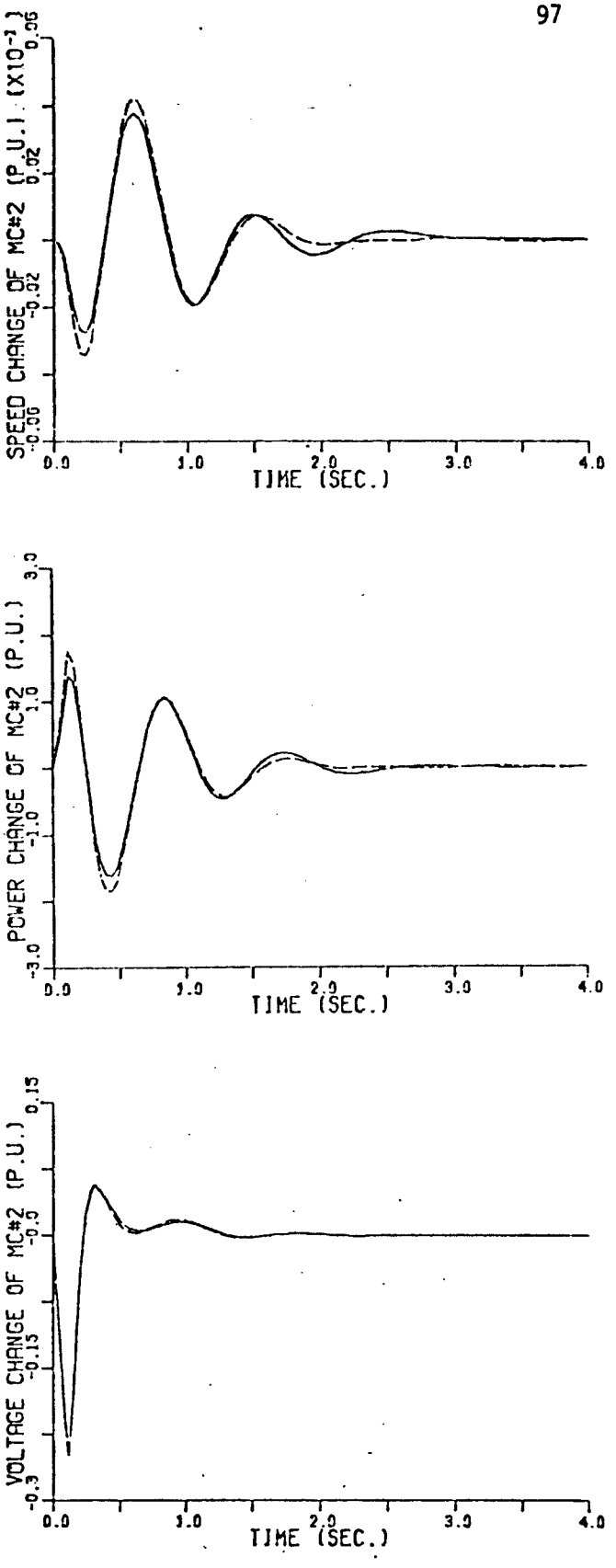

Fig. 5.12 Responses of Case J

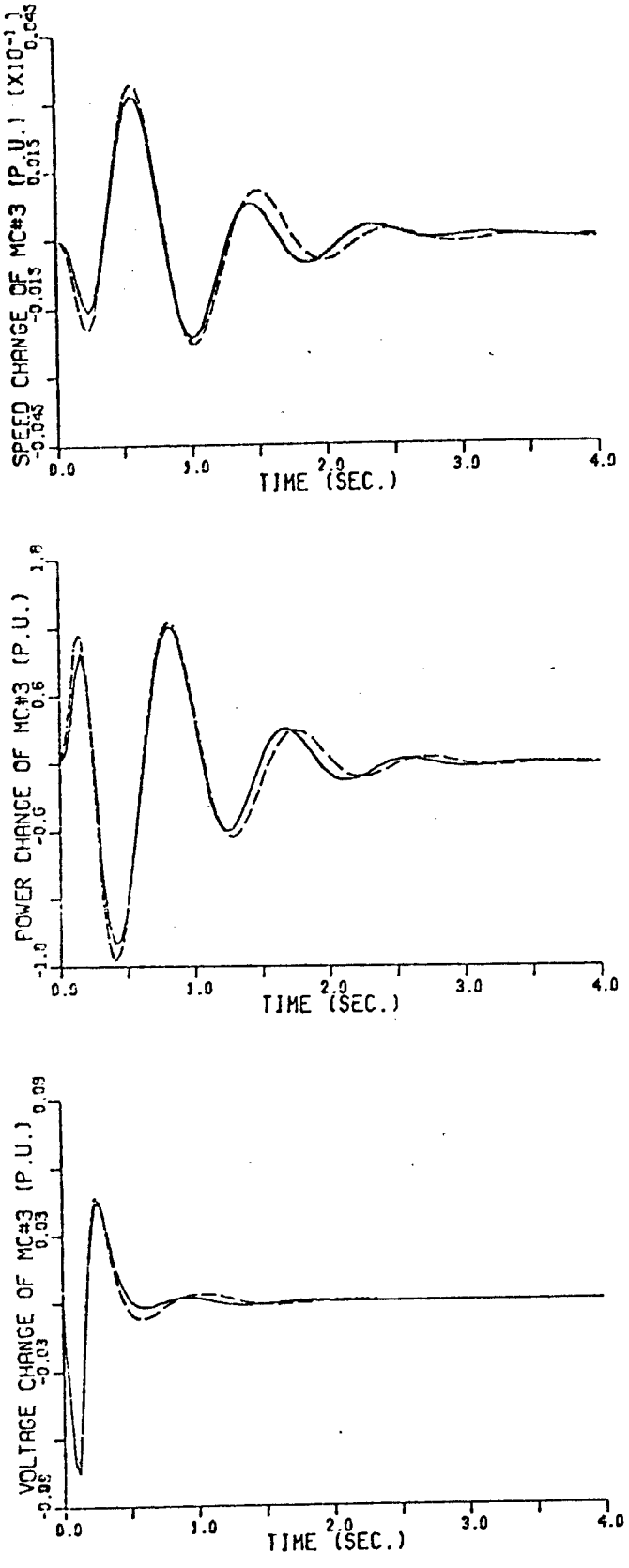

Fig. 5.13 Responses of Case K

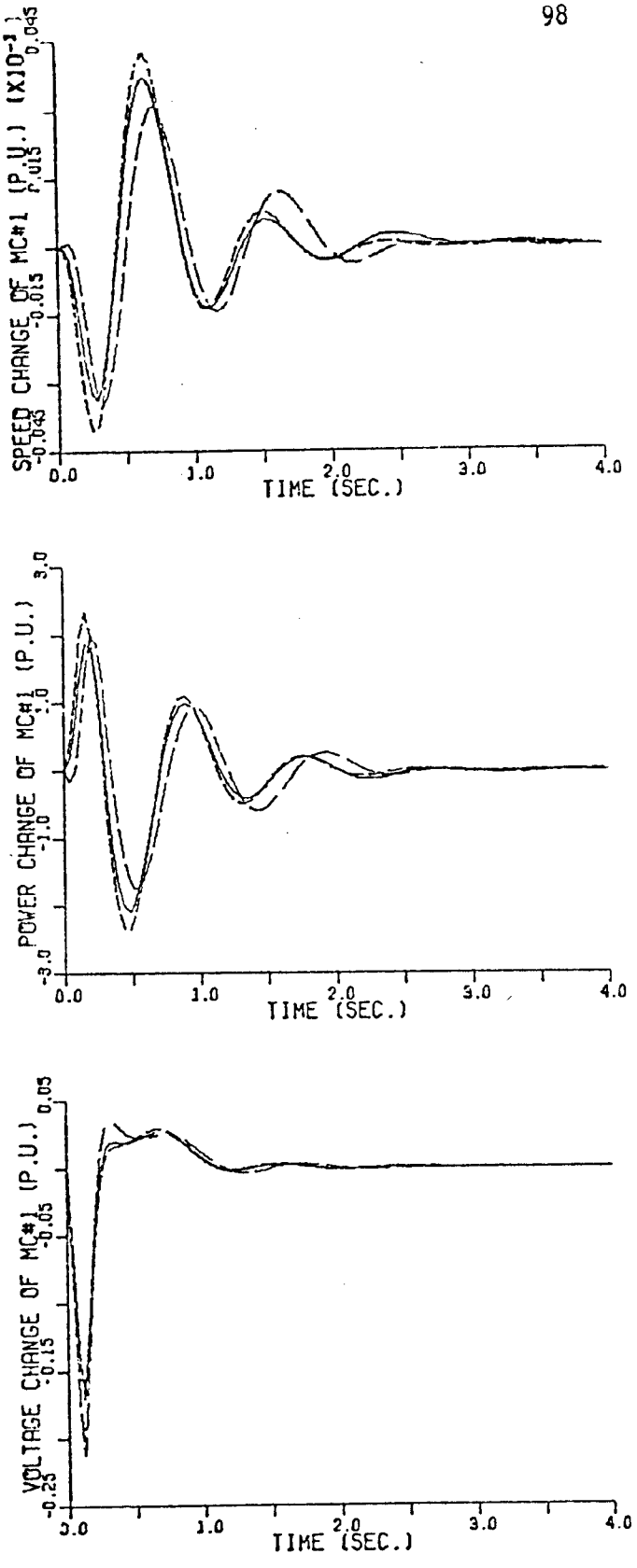

Fig. 5.14 Responses of Case L

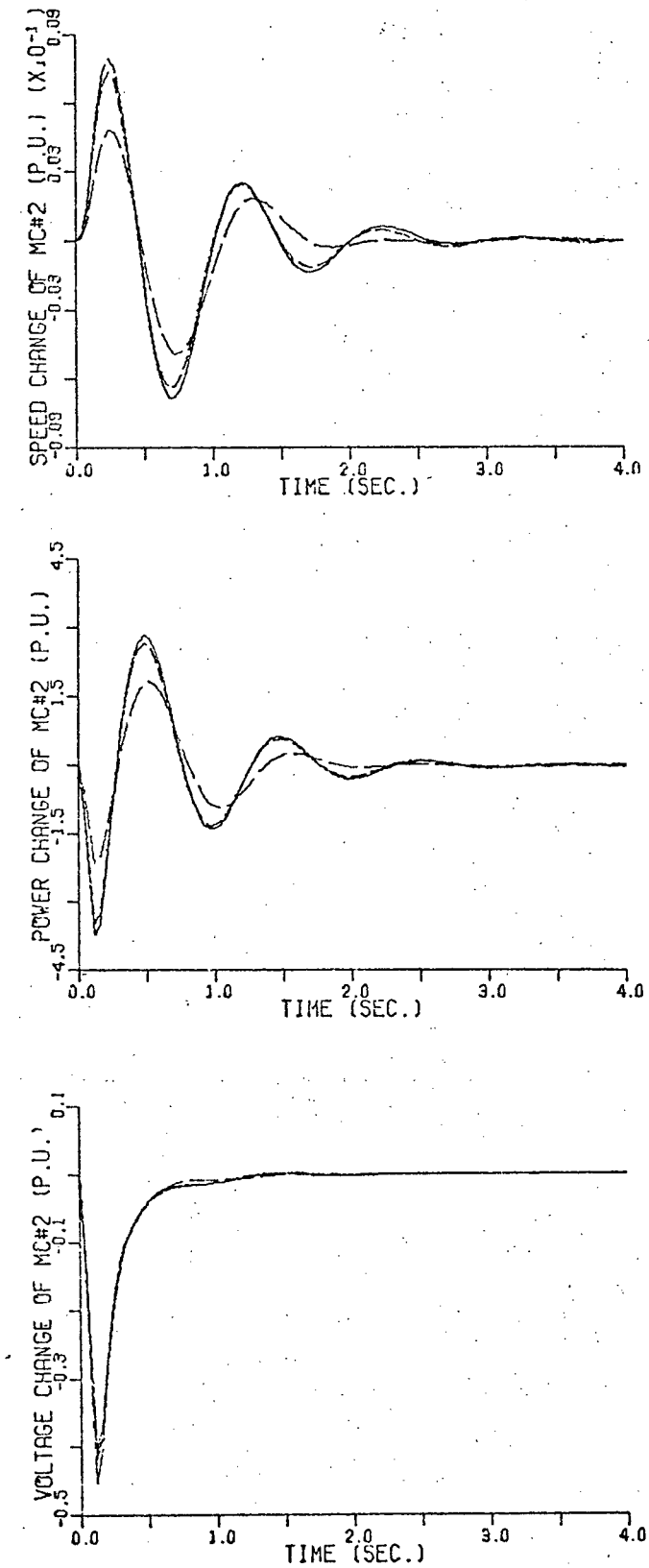

Fig. 5.15 Responses of Case M

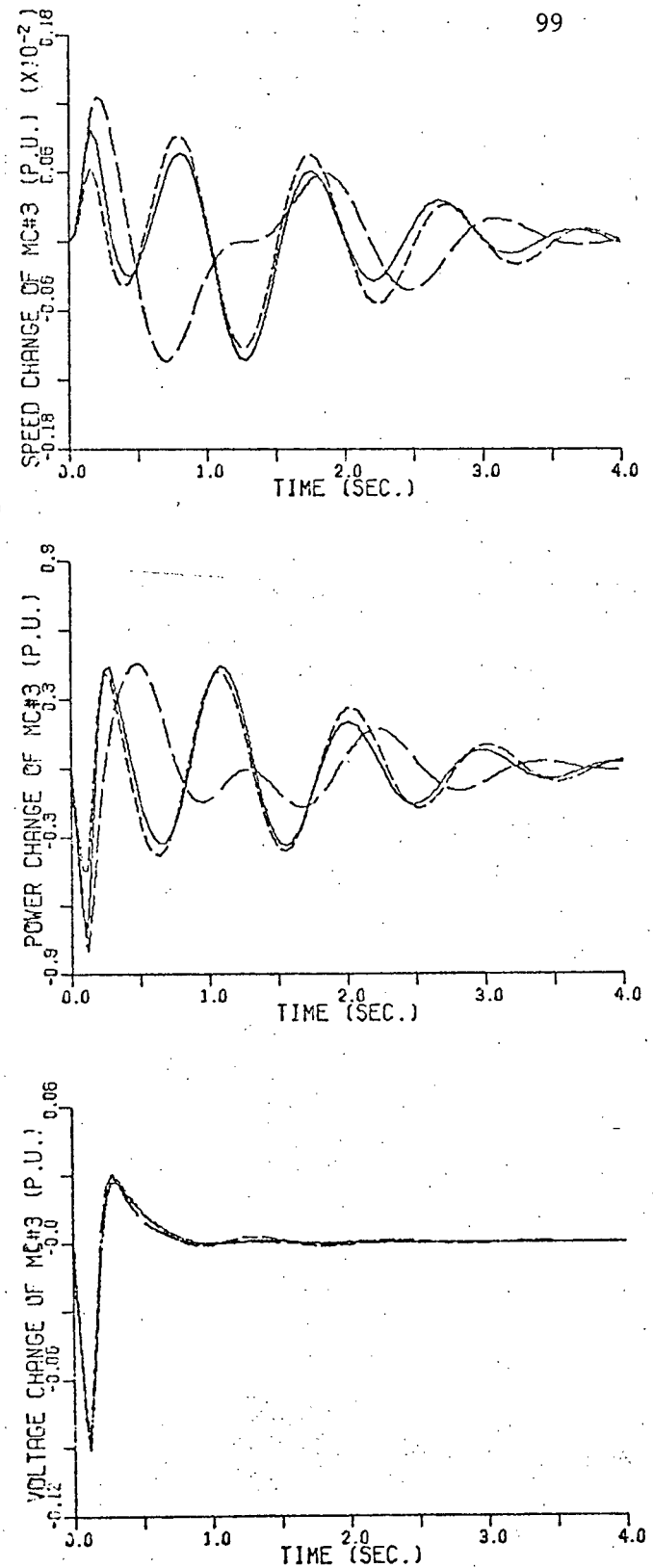

Fig. 5.16 Responses of Case N

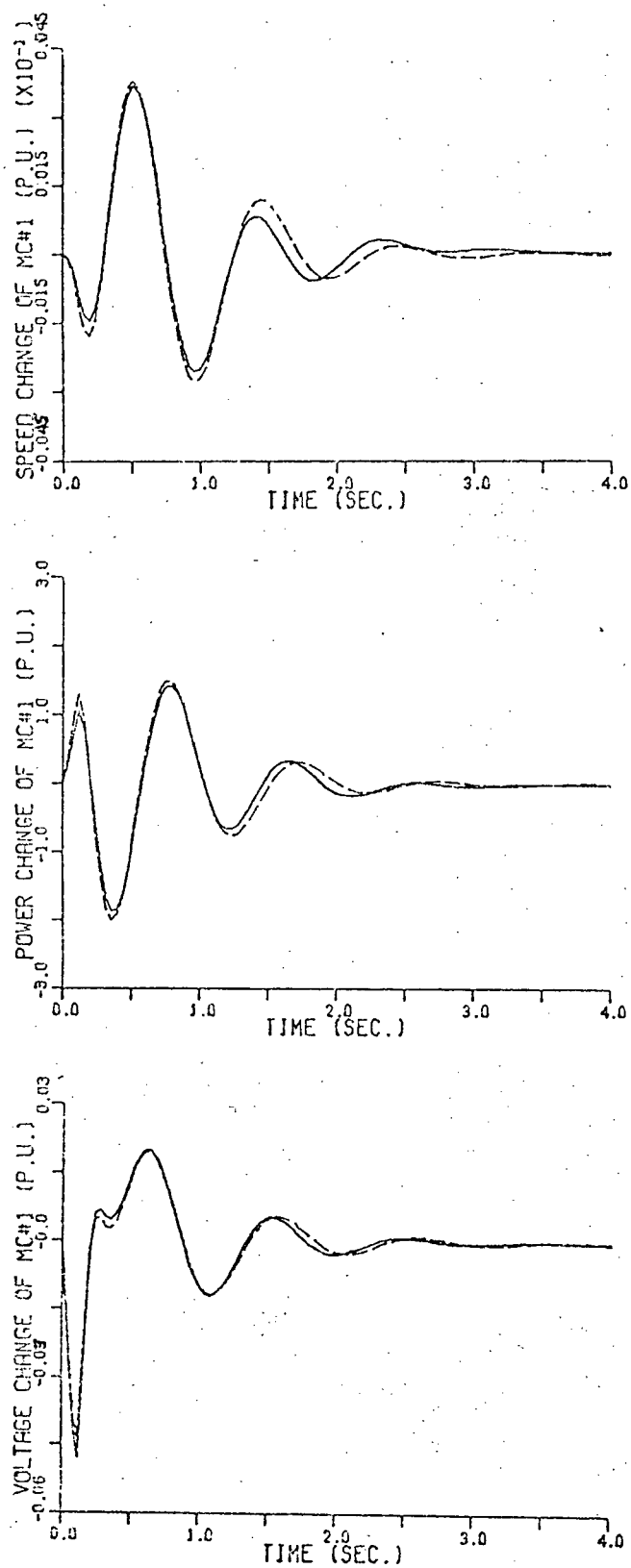

Fig. 5.17 Responses of Case O

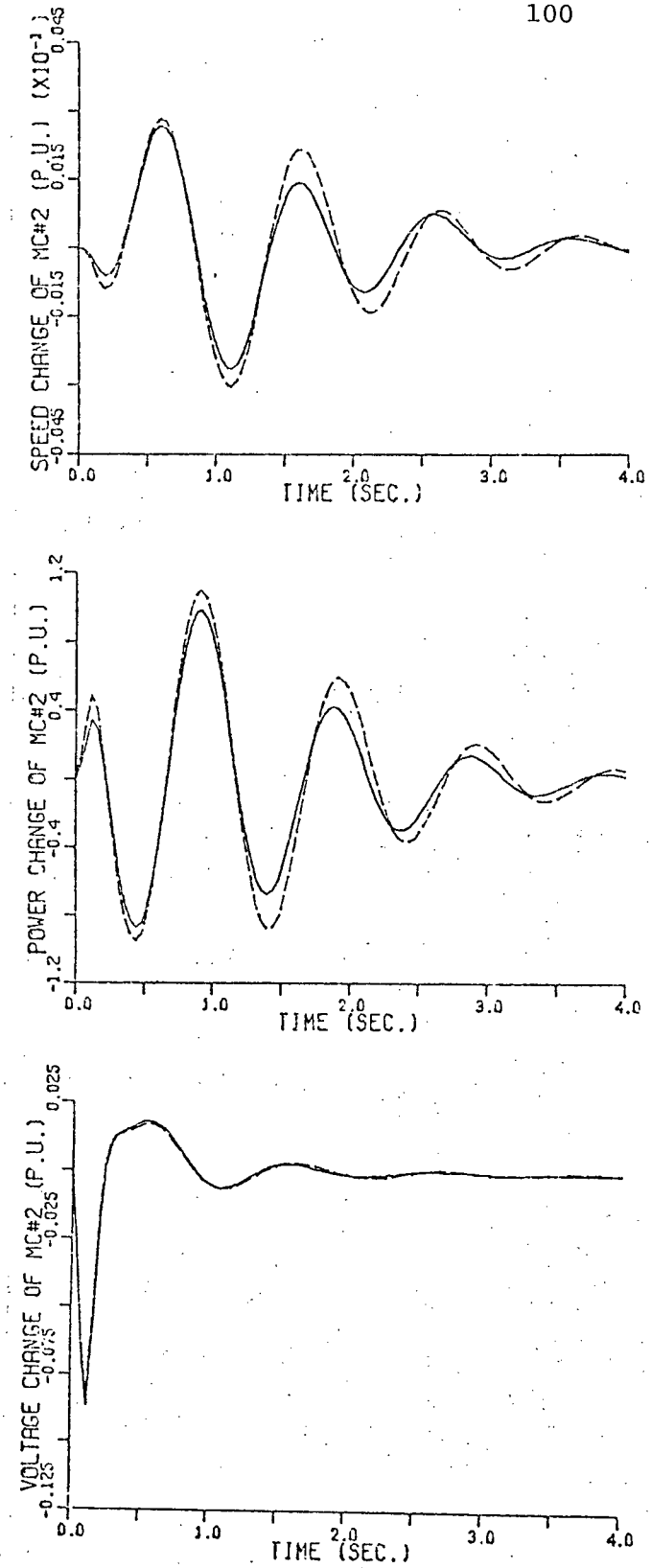

Fig. 5.18 Responses of Case P

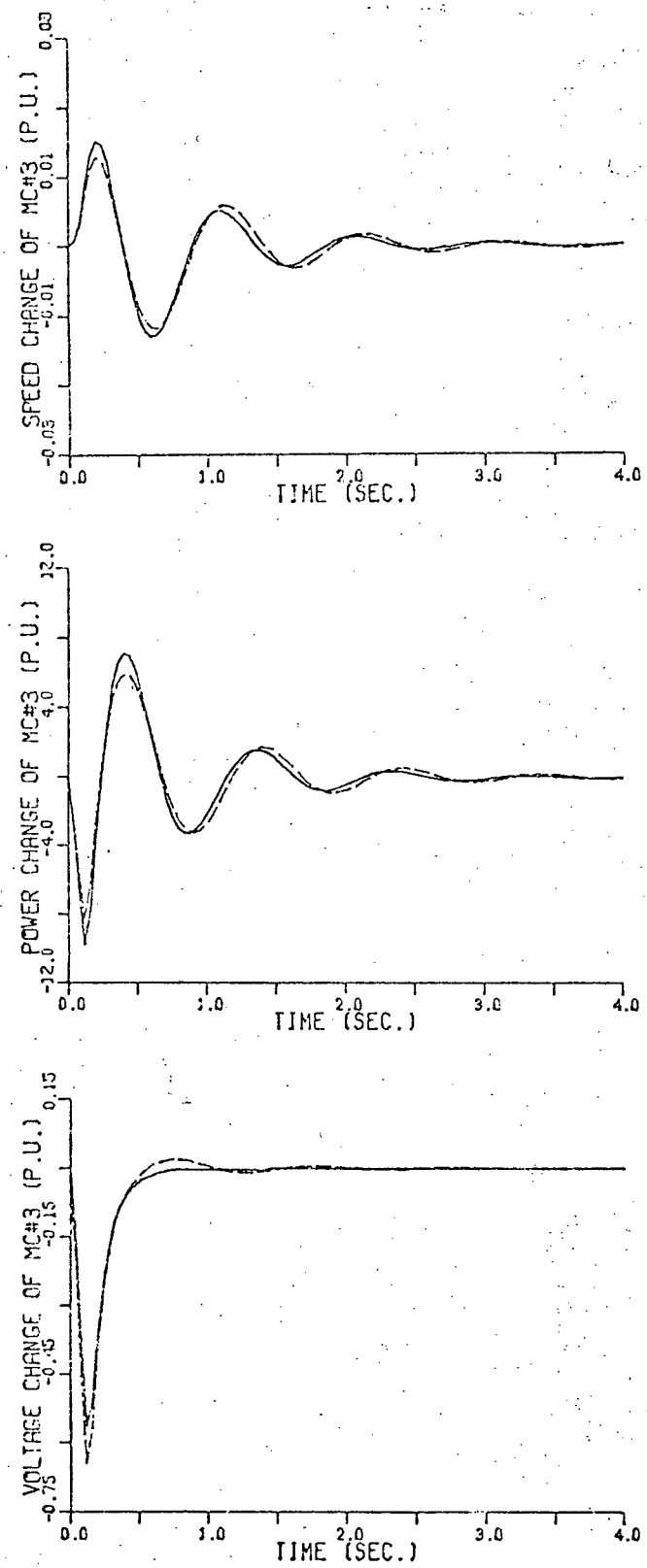

Fig. 5.19 Responses of Case Q

All test results show that the responses of the dynamic equivalent system to three-phase faults within the study system are in good agreement with those of the original system, and those of the infinite bus system are not.

5-4 Conclusions of Chapter 5

The dynamic equivalents estimated by the technique developed in this thesis proves to be valid

1) that each of the $K1_{ii}$, ---, $K6_{ii}$ constants of the study system models has the same value, whether calculated from the original system parameters or the equivalent system parameters,
2) that the self and interacting electric torques, their synchronizing and damping components, and the total are closely equal, whether calculated from the original system or the equivalent system, and
3) that the dynamic responses to a three-phase fault, in each case of many case, are in very good agreement for the original system and the dynamic equivalent system.

6. CONCLUSIONS

The thesis confirms the feasibility of identifying dynamic equivalents of external systems of large electric power systems from measurements obtained within the study system. From the results of this study, the following are concluded:

1) The method can be implemented without the need of data gathering or data transfer from the external system.
2) By choosing an intentional disturbance with its effect much larger than that due to normal load fluctuations, yet within the safe voltage regulation limit of the power system, relatively simple estimation technique can be applied to the dynamic equivalent estimation.
3) The study and equivalent systems are modelled as a power system with the same parametric structure, consequently, a multi-machine model has been developed for the dynamic range.
4) An algorithm is developed to choose the most suitable model for the external equivalent system based on the cost function sensitivity and the uniqueness of the equivalent parameters.
5) For the cases studied, the dynamic equivalents are unique regardless of the nature and location of the disturbance.
6) The validity of the equivalent systems are verified by the agreement in the values of the $K1_{ii}$, ---, $K6_{ii}$ constants, and the self and interacting electric torques and their synchronizing and damping components of the study system machines, whether computed from the original system parameters or from the equivalent system parameters.
7) The validity is further verified from the results of three-phase short circuit tests, the dynamic responses of the original system are in

good agreement with those of the equivalent system, but not with the infinite bus representation.

8) The technique presented in this thesis could be developed for on-line equivalencing by frequently updating the dynamic equivalents whenever needed.

9) The dynamic equivalents developed in this thesis are for the dynamic stability studies; the linearized model has been used. For transient stability studies, however, more work must be done, which shall be continued in the future.

For future work, the following topics are suggested:

1) Improving the accuracy by using a nonlinear model for the study system.

2) Design controllers for the stabilization of the entire system including the dynamic equivalents.

APPENDIX

A1 Self Electric Torque Equations

The electric torque of a machine generated by the machine itself is resultant of the mechanical loop electric torque and electrical loop electric torque. Fig. A.1 shows the mechanical loop of the i-th machine without the interaction effect of the other machines in the system. The self-synchronizing torque ΔTS_{Mii} and the self-damping torque ΔTD_{Mii} are

$$\Delta TS_{Mii} = K1_{ii}\ \Delta\delta_i$$

$$\Delta TD_{Mii} = D_i\ \Delta\omega_i = D_i\ S\ \Delta\delta_i/\omega_o$$

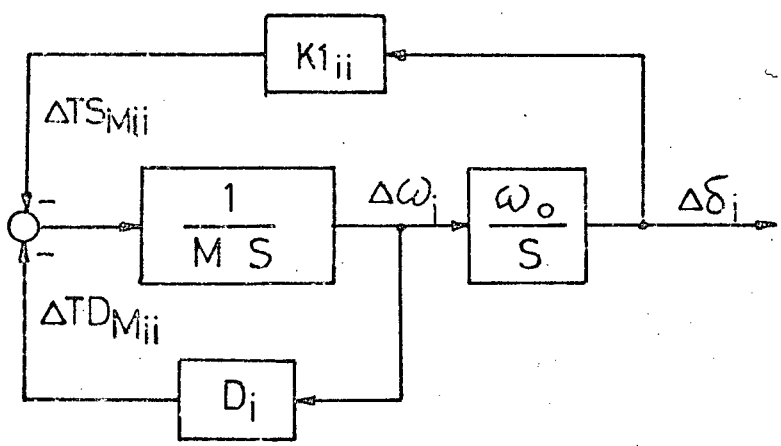

A.1 The mechanical loop of the i-th machine.

The electric loop of machine i is shown in Fig. A.2. It includes the voltage regulator effect. The self electric torque of the electric loop ΔTE_{ii} is

$$\Delta TE_{ii} = -\frac{KA_i\ K2_{ii}\ K3_{ii}\ (K5_{ii} + K4_{ii}\ (1+S\ TA_i)/KA_i)}{(1+S\ T'_{doi}\ K3_{ii})(1+S\ TA_i) + KA_i\ K3_{ii}\ K6_{ii}}\ \Delta\delta_i \tag{A.1}$$

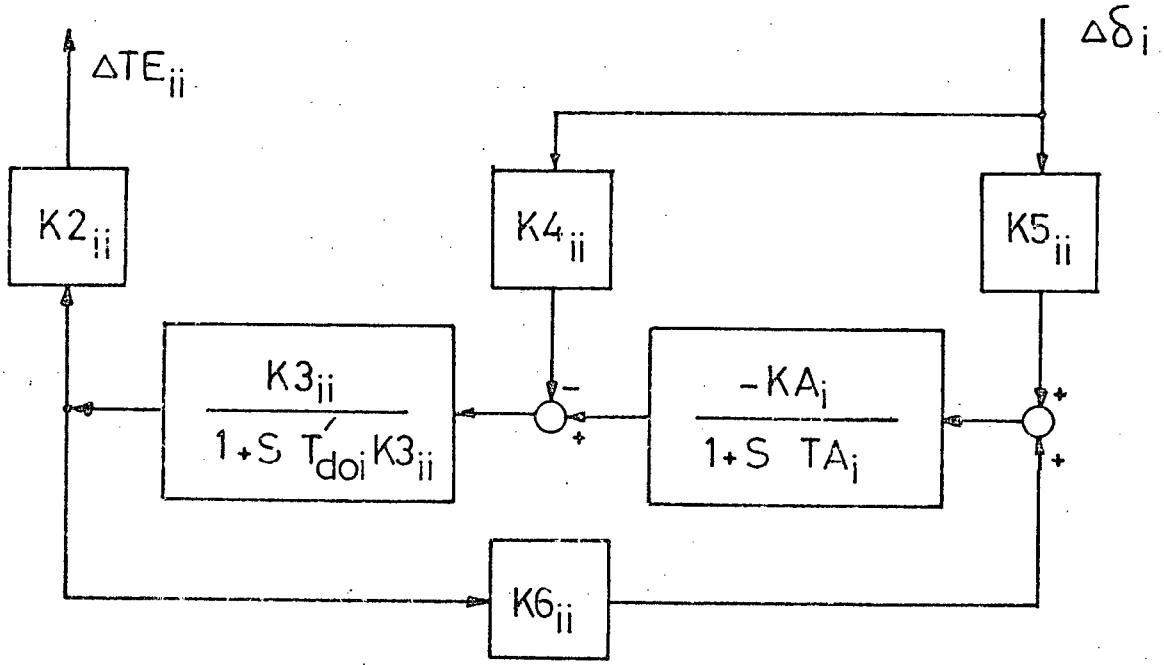

Fig. A.2 The electrical loop of the i-th machine.

The voltage regulator time constant TA_i is usually much smaller than the field open circuit time constant T'_{do}, thus

$$\Delta TE_{ii} = - \frac{KA_i\ K2_{ii}\ K3_{ii}\ (K5_{ii} + K4_{ii}/KA_i)}{(1+S\ T'_{doi}\ K3_{ii}) + KA_i\ K3_{ii}\ K6_{ii}}\ \Delta\delta_i \qquad (A.2)$$

Substituting S of equation (A.2) by $j\omega_i$ (the oscillation frequency) and separating the real and imaginary components, the synchronizing torque component ΔTS_{Eii} and the damping torque component ΔTD_{Eii} are

$$\Delta TS_{Eii} = - \frac{KA_i\ K2_{ii}\ K3_{ii}\ (K5_{ii} + K4_{ii}/KA_i)(1 + KA_i\ K3_{ii}\ K6_{ii})}{(1 + KA_i\ K3_{ii}\ K6_{ii})^2 + (\omega_i\ T'_{doi}\ K3_{ii})^2}\ \Delta\delta_i$$

$$\Delta TD_{Eii} = \frac{KA_i\ K2_{ii}\ (K3_{ii})^2\ (K5_{ii} + K4_{ii}/KA_i)\ \omega_i\ T'_{doi}}{(1 + KA_i\ K3_{ii}\ K6_{ii})^2 + (\omega_i\ T'_{doi}\ K3_{ii})^2}\ \Delta\delta_i$$

The synchronizing torque of the electrical loop is usually negative, while the damping torque is positive. However, the effect is reversed if $K5_{ii}$ is negative and $(K5_{ii} + K4_{ii}/KA_i)$ is less than zero, which may hap-

pen to systems with high impedances and heavy loadings.

The total self synchronizing and damping torques of i-th machine, respectively, are

$$\Delta TS_{ii} = \Delta TS_{Mii} + \Delta TS_{Eii} \tag{A.3}$$

$$\Delta TD_{ii} = \Delta TD_{Mii} + \Delta TD_{Eii} \tag{A.4}$$

A2 Dynamic Interacting Electric Torque Equations

Fig. A.3 shows the loop of torque contribution to machine i by other machines through their mechanical loops.

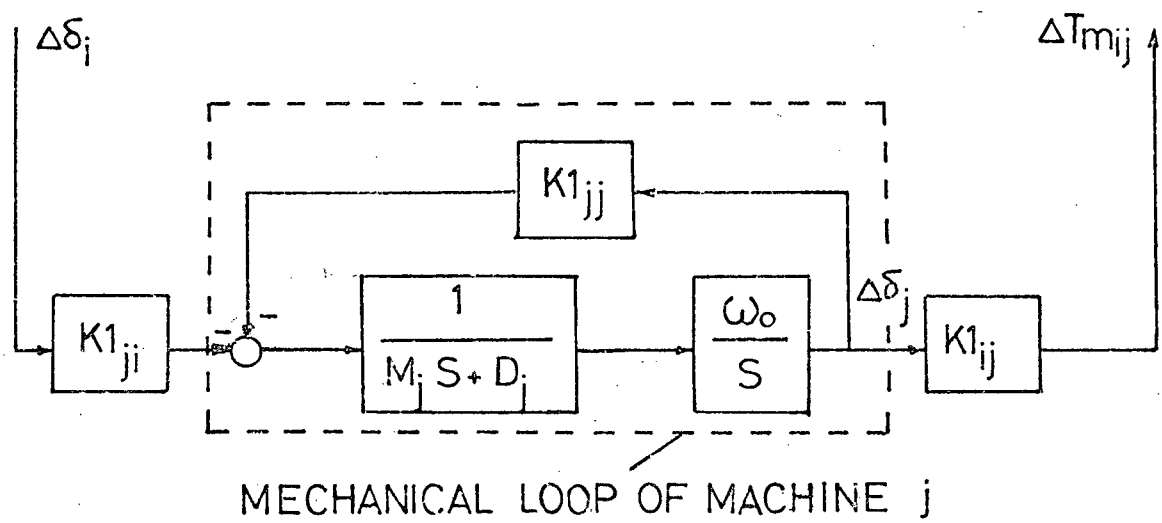

Fig. A.3 Interaction of the mechanical loop of machine j on machine i.

Since the i-th machine is disturbed, the dynamic interaction between any other two machines is small and can be ignored. The electric torque contribution to machine i by machine j through its mechanical loop is given by

$$\Delta T_{mij} \underset{j\neq i}{=} - \frac{K1_{ij}\ K1_{ji}}{K1_{jj}} \frac{\omega_{nj}^2}{S^2 + 2\zeta_j\ \omega_{nj}\ S + \omega_{nj}^2} \Delta\delta_i$$

where

$$\omega_{nj}^2 \triangleq \frac{\omega_o\ K1_{jj}}{M_j}\ , \text{ and } \zeta_j = \frac{D_j}{2M_j\ \omega_{nj}}$$

Substituting S by $j\omega_i$ and separating the synchronizing and damping torque components gives

$$\Delta TS_{mij} \underset{j\neq i}{=} \frac{K1_{ij}\ K1_{ji}}{K1_{jj}} \frac{(\omega_{nj}^2 - \omega_i^2)}{[(\omega_{nj}^2 - \omega_i^2)^2 + (2\zeta_j\ \omega_{nj})^2]} \Delta\delta_i$$

$$\Delta TD_{mij} \underset{j\neq i}{=} \frac{K1_{ij}\ K1_{ji}}{K1_{jj}} \frac{2\zeta_j\ \omega_{nj}}{[(\omega_{nj}^2 - \omega_i^2)^2 + (2\zeta_j\ \omega_{nj})^2]} \Delta\delta_i$$

The synchronizing torque contribution ΔTS_{mij} is usually negative, while the damping torque contribution ΔTD_{mij} is positive. However, if machine j has high inertia that $\omega_{nj} < \omega_i$, the effect is reversed.

The dynamic interacting torque contribution to machine i by all other machines through their mechanical loops are

$$\Delta TS_{Mij} = \sum_{j\neq i} \Delta TS_{mij}$$

$$\Delta TD_{Mij} = \sum_{j\neq i} \Delta TD_{mij}$$

There is also torque contribution to the i-th machine by other machines through their electrical loops; Fig. A.4.

$$T_{eij} \underset{j\neq i}{=} - \frac{KA_j\ K2_{ij}\ K3_{jj}\ [K5_{ji} + K4_{ji}\ (1+S\ TA_j)/KA_j]}{(1+S\ T'_{doj}\ K3_{jj})(1+S\ TA_j) + KA_j\ K3_{jj}\ K6_{jj}} \Delta\delta_i$$

Assuming that $T'_{doj} >> TA_j$, and replacing S by $j\omega_i$, the two torque components are

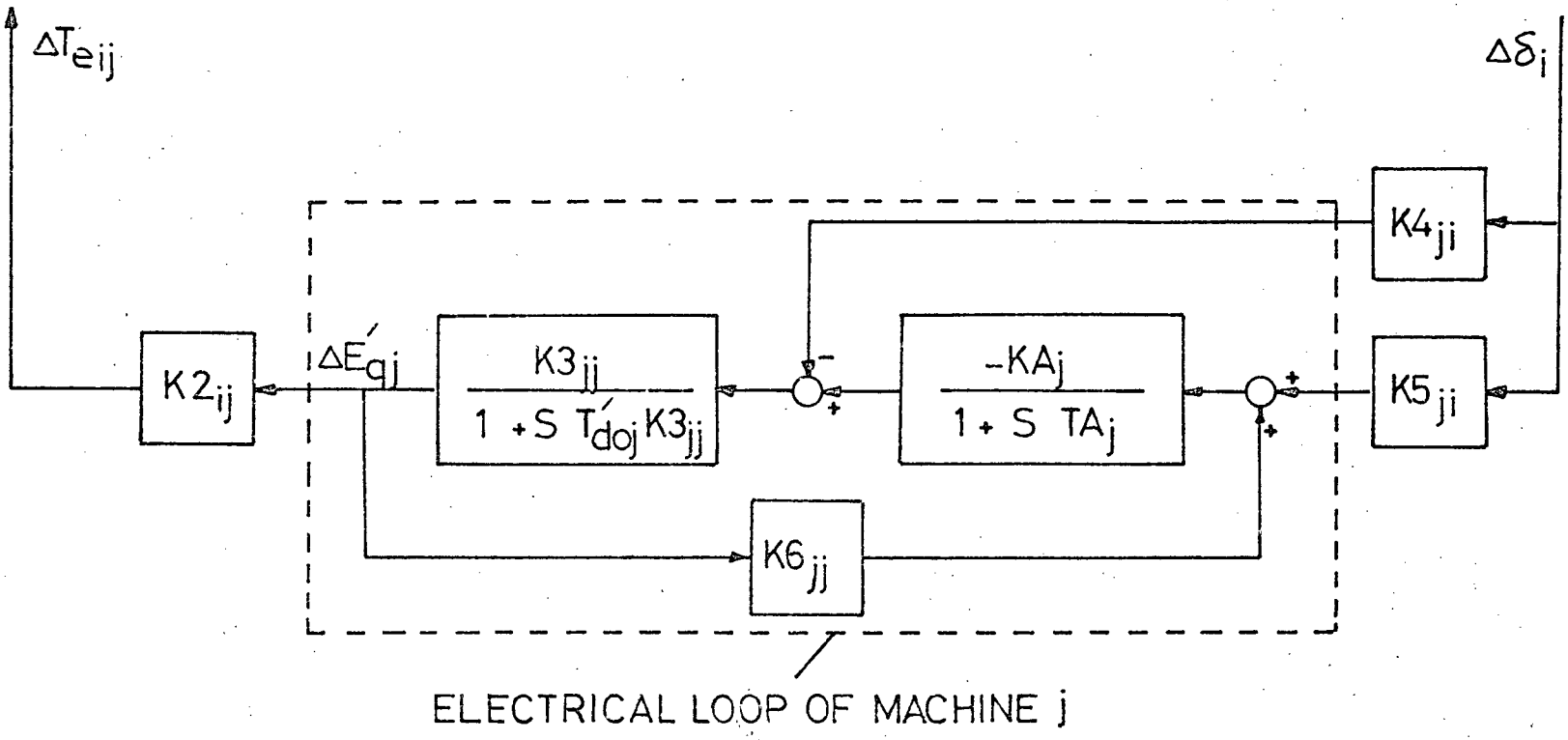

Fig. A.4 Interaction of the electrical loop of machine j on machine i.

$$\Delta TS_{eij} = -\frac{KA_j\ K2_{ij}\ K3_{jj}\ (K5_{ji} + K4_{ji}/KA_j)(1 + KA_j\ K3_{jj}\ K6_{jj})}{(1 + KA_j\ K3_{jj}\ K6_{jj})^2 + (\omega_i\ T'_{doj}\ K3_{jj})^2}\ \Delta\delta_i$$

$$\Delta TD_{eij} = \frac{KA_j\ K2_{ij}\ K3^2_{jj}\ (K5_{ji} + K4_{ji}/KA_j)\ \omega_i\ T'_{doj}}{(1 + KA_j\ K3_{jj}\ K6_{jj})^2 + (\omega_i\ T'_{doj}\ K3_{jj})^2}\ \Delta\delta_i$$

For $(K5_{ji} + K4_{ji}/KA_j) > 0$, the synchronizing torque ΔTS_{eij} has negative effect and the damping torque TD_{eij} has positive effect, and vice versa for $(K5_{ji} + K4_{ji}/KA_j) < 0$.

The dynamic interacting component torque contributions to the i-th machine by all other machines through their electrical loops are

$$\Delta TS_{Eij} = \sum_{j \neq i} \Delta TS_{eij}$$

$$\Delta TD_{Eij} = \sum_{j \neq i} \Delta TD_{eij}$$

The total interacting synchronizing and damping torque contributions to the i-th machine by all other machines through their mechanical and electrical loops are

$$\Delta TS_{ij} = \Delta TS_{Mij} + \Delta TS_{Eij} \tag{A.5}$$

$$\Delta TD_{ij} = \Delta TD_{Mij} + \Delta TD_{Eij} \tag{A.6}$$

Finally, the total electric torque components are

$$\Delta TS_{ti} = \Delta TS_{ii} + \Delta TS_{ij}$$

$$\Delta TD_{ti} = \Delta TD_{ii} + \Delta TD_{ij}$$

REFERENCES

[1] EPRI, "Development of Dynamic Equivalents for Transient Stability Studies", prepared by Systems Control, Inc., EPRI EL-456, (Research Project 763).

[2] J.W. Ward, "Equivalent Circuits for Power Flow Studies", AIEE Trans., Vol. 68, 1949, pp. 373-383.

[3] G. Contaxis and A.S. Debs, "Identification of External System Equivalents for Steady-State Security Assessment", IEEE Trans. on Power Apparatus and Systems, March/April 1978, pp. 409-414.

[4] H. Duran and N. Arvanitidis, "Simplification for Area Security Analysis: A New Look at Equivalence", IEEE Trans. on PAS, March/April 1972, pp. 670-679.

[5] T.G. DeVille and F.C. Schweppe, "On Line Identification of Interconnected Network Equivalents from Operating Data", IEEE Sumnar Power Meeting, 1972, no. C72-464-6.

[6] J.M. Undrill and A.E. Turner, "Construction of Power System Electromechanical Equivalents by Modal Analysis", IEEE Trans. on PAS, Sept./Oct. 1971, pp. 2049-2059.

[7] J.M. Undrill, J.A. Casazza, E.M. Gulachenski and L.K. Kirchmayer, "Electromechanical Equivalents for Use in Power System Stability Studies", IEEE Trans. on PAS, Sept./Oct. 1971, pp. 2060-2071.

[8] W.W. Price, E.M. Gulachenski, P. Kundur, F.L. Lange, G.C. Loehr, B.A. Roth and R.F. Silva, "Testing the Modal Dynamic Equivalents Technique", IEEE Trans. on PAS, July/Aug. 1978, pp. 1366-1372.

[9] G.E. Grund, "Power System Modal Identification from Large Scale Simulation Using Model Adaptive Reference Control", IEEE Trans. on PAS, May/June 1978, pp. 780-788.

[10] A. Chang and M.M. Adibi, "Power System Dynamic Equivalents", IEEE Trans. on PAS, Nov./Dec. 1970, pp. 1737-1744.

[11] R.W. deMello, R. Podmore and K.N. Stanton, "Coherency-Based Dynamic Equivalents: Applications in Transient Stability Studies", PICA Conference Proceedings, 1975.

[12] A.J. Germond and R. Podmore, "Dynamic Aggregation of Generating Unit Models", IEEE Trans. on PAS, July/Aug. 1978, pp. 1060-1069.

[13] R. Podmore, "Identification of Coherent Generators for Dynamic Equivalents", IEEE Trans. on PAS, July/Aug. 1978, pp. 1344-1354.

[14] EPRI, "Coherency Based Dynamic Equivalents for Transient Stability Studies", EPRI Report, Project RP 90-4, Jan. 1975.

[15] R.D. Masiello and F.C. Schweppe, "Multi-Machine Excitation Stabilization Via System Identification", IEEE Trans. on PAS, March/April 1975, pp. 444-454.

[16] W.W. Price, F.C. Schweppe, E.M. Gulachenski and R.F. Silva, "Maximum Likelihood Identification of Power System Dynamic Equivalents", Proc. IEEE Conference on Decision and Control, 1974.

[17] W.W. Price, D.N. Ewart, E.D. Gulachenski and R.F. Silva, "Dynamic Equivalents from On-Line Measurements", IEEE Trans. on PAS, July/Aug. 1975, pp. 1349-1357.

[18] M.A.H. Ibrahim, O.M. Mostafa and A.H. El-Abiad, "Dynamic Equivalents Using Operating Data and Stochastic Modelling", IEEE Trans. on PAS, Sept./Oct. 1976, pp. 1713-1722.

[19] J. Giri and A. Bose, "Identification of Dynamic Equivalents for On-Line Transient Security Assessment", IEEE PES Summer Meeting, 1977, no. A77-514-3.

[20] Yao-nan Yu, M.A. El-Sharkawi and M.D. Wvong, "Estimation of Unknown Large Power System Dynamics", IEEE Trans. on PAS, Jan./Feb. 1979, pp. 279-289.

[21] F.C. Schweppe and J. Wildes, "Power System Static-State Estimation, Part I and II", IEEE Trans. on PAS, Jan. 1970, pp. 120-135.

[22] C.C. Lee and O.T. Tan, "A Weighted-Least-Square Parameter Estimator for Synchronous Machines", IEEE Trans. on PAS, Jan./Feb. 1977, pp. 97-101.

[23] J.N. Prewett, E.D. Farmer, W.D. Laing and P. Jervis, "Studies of a State Estimation Procedure for a Power System and its On-Line Performance", IEE Conference on On-Line Operation and Optimization of Transmission and Distribution Systems, June 1976.

[24] K.N. Stanton, "Estimation of Turboalternator Transfer Function Using Normal Operating Data", IEE Proc., Sept. 1965, pp. 1713-1720.

[25] C.J. Herget and C.U. Park, "Parameter Identification and Verification of Low Order Boiler Models", IEEE Trans. on PAS, July/Aug. 1976, pp. 1153-1158.

[26] R.H. Park, "Two-Reaction Theory of Synchronous Machines; Generalized Method of Analysis-PartI", AIEE Trans. on PAS, July 1929, pp. 716-730.

[27] W.G. Heffron and R.A. Phillips, "Effect of a Modern Amplidyne Voltage Regulator on Underexcited Operation of Large Turbine Generators", AIEE Trans. on PAS, August 1952, pp. 692-697.

[28] F.P. deMello and C. Concordia, "Concept of Synchronous Machine Stability as Affected by Excitation Control", IEEE Trans. on PAS, April 1969, pp. 316-328.

[29] M.K. El-Sherbiny and D.M. Mehta, "Dynamic System Stability, Part I", IEEE Trans. on PAS, Sept./Oct. 1973, pp. 212-220.

[30] H.A. Moussa and Yao-nan Yu, "Dynamic Interaction of Multi-Machine Power System and Excitation Control", IEEE Trans. on PAS, July/Aug. 1974, pp. 1150-1158.

[31] Yao-nan Yu, "Power System Dynamics", Lecture Notes at UBC, 1976.

[32] V. Subbarao, R.E. Burridge and R.D. Findlay, "Mathematical Models of Synchronous Machines for Dynamic Studies", IEEE PES Winter Meeting, 1979.

[33] P.C. Krause, F. Nozari, T.L. Skvarenina and D.W. Olive, "The Theory of Neglecting Stator Transients", IEEE Trans. on PAS, Jan./Feb. 1979, pp. 141-148.

[34] E.W. Kimbark, "Power System Stability: Synchronous Machines", Dover Publications, New York, 1968.

[35] A.E. Fitzgerald and Charles Kingsley, Jr., "Electric Machinery", McGraw-Hill Book Company, 1961.

[36] Yao-nan Yu, "Control Strategies for Stabilizing North America Power Systems - Current Practice and Development", Automatic Control Theory and Applications, Sept. 1974, pp. 50-55.

[37] J.M. Mendel, "Discrete Techniques of Parameter Estimation", Marcel Dekker, Inc., New York, 1973.

[38] P. Eykhoff, "System Identification-Parameter and State Estimation", John Wiley & Sons, 1977.

[39] K.J. Astrom and P. Eykhoff, "System Identification - A Survey", Automatica, Vol. 7, pp. 123-162.

[40] A. Gelb, editor, "Applied Optimal Estimation", MIT Press, 1974.

[41] A.P. Sage and J.L. Melsa, "Estimation Theory with Applications to Communications and Control", McGraw-Hill, 1971.

[42] Glenn W. Stagg and Ahmed H. El-Abiad, "Computer Methods in Power System Analysis", McGraw-Hill, 1968.