CHILDREN'S BELIEFS ABOUT FORCES IN EQUILIBRIUM

by

JOSE M. AGUIRRE
Teacher of Physics, University of Chile, 1968

A THESIS SUBMITTED IN PARTIAL FULFILLMENT OF
THE REQUIREMENTS FOR THE DEGREE OF
MASTER OF ARTS

in

THE FACULTY OF GRADUATE STUDIES
Department of Science Education

We accept this thesis as conforming
to the required standard

THE UNIVERSITY OF BRITISH COLUMBIA
June, 1978

In presenting this thesis in partial fulfilment of the requirements for an advanced degree at the University of British Columbia, I agree that the Library shall make it freely available for reference and study. I further agree that permission for extensive copying of this thesis for scholarly purposes may be granted by the Head of my Department or by his representatives. It is understood that copying or publication of this thesis for financial gain shall not be allowed without my written permission.

Jose M. Aguirre

Department of Science Education

The University of British Columbia
2075 Wesbrook Place
Vancouver, Canada
V6T 1W5

Date June 27, 1978.

ABSTRACT

Clinical interviews to explore children's beliefs about the concept of force were carried out with 32 children (18 boys, 14 girls), whose ages ranged from 6 to 14 years. Three tasks were used to investigate their beliefs about the action of a force, action and reaction, equilibrium of forces, and composition of forces. A conceptual profile was constructed on the aspects of force covered in the tasks. This conceptual profile was then used to categorize the children's beliefs which were uncovered in the interviews. It was found that the interview methodology was a feasible approach for an exploratory and descriptive study of students' beliefs about a particular concept and that the children in the sample had a set of typical a priori beliefs about force which they used to account for the different experimental situations. This set of beliefs was subsequently categorized in three levels of abstraction to bring to light the possible patterns of these beliefs. The children's ideas found in the study and the categorization of these into levels of abstraction could be useful for the curriculum developer and particularly for the teacher in planning teaching strategies.

TABLE OF CONTENTS

LIST OF TABLES

LIST OF FIGURES

ACKNOWLEDGMENT

I wish to express my deep appreciation to Professors G. Erickson, T. Hobbs, G.H. Cannon, and P. Mathews for agreeing to act as members of the thesis committee.

To Professor G. Erickson, my thesis adviser, I owe a special debt of gratitude for his advice and guidance. His readiness to discuss any small detail of my work whenever I needed was encouraging. I am also pleased to acknowledge the helpful and necessary discussions with Professors G.H. Cannon and T. Hobbs, which helped to clarify some of the important problems encountered during my study.

I must also mention here the important cooperation of the children interviewed and their teachers, especially Mr. N. Negrin, physics teacher at Gladstone Secondary School.

The patience of my daughters Carmen and Alejandra, and my compañera Betty was also important to my work since during this study I couldn't dedicate enough time to them.

Finally, I wish to thank Mrs. Carmen de Silva who has displayed great patience in typing this thesis.

CHAPTER ONE

1.00 INTRODUCTION

Theory has long been recognized as a guide to addressing problems of educational practice. Broudy (1965) has attempted to clarify the relationship between theory and practice in a professional field such as education. He outlines four problem areas which he claims to be unique to education. One of these areas is the development and justification of strategies of teaching and learning. Briefly stated, Broudy claims that theoretical knowledge can be used, in several different ways, to address problems of practice. One way is to try and apply the theory directly (e.g. deducing hypotheses from the theory, to try and solve the problem). But, Broudy points out that knowledge can also be used in an interpretative manner. In this way knowledge provides us with broad conceptual maps that permit us to better understand the phenomena. It has been in this latter sense that theoretical knowledge has had the most impact on educational problems.

One area of knowledge that has been discussed extensively for its potential use in education is that of cognitive theory. In particular, the theoretical perspectives of Ausubel, Bruner and Piaget have been used to justify particular teaching strategies or even

programs. The theoretical perspective of interest in this study is Piaget's theory of intellectual development.

Some educators have derived prescriptions from this theory which suggest that curriculum content ought to be coordinated with the stage of intellectual development of the learner. Those researchers using this approach tend to place most of the emphasis upon defining those developmental stages in terms of operational structures (e.g. see Lawson and Renner (1975), Lawson and Wollman (1976). However, the present study subscribes to the view that learner knowledge of content, the children's knowledge that they bring to the learning situation, is also an important component in developing any set of instructional procedures.

In this study, the broad concepts examined will be those of force and the composition of forces. There are several reasons for selecting these concepts: (a) they are prominent topics in secondary school curricula, (b) children encounter situations involving forces throughout their childhood years, (c) they present an opportunity to investigate how children understand a vectorial quantity.

Knowledge of children's ideas about scientific concepts is as important to curriculum makers as it is to science teachers. To the curriculum developer for example, it could help to develop instructional materials

that are suitable to a broad spectrum of students; to decide at what particular grade or age levels certain concepts might be presented; to assist students with certain types of misconceptions by developing a range of instructional materials and activities. For the science teacher, this type of knowledge could help by enabling them to better understand typical difficulties experienced by students and so alter their teaching strategies in an effort to resolve these difficulties.

While a wide variety of approaches have been used to study the pattern of beliefs held by a child about a concept (e.g. see Preece (1976), Shavelson (1974), Driver (1973), Albert (1974) and Pines (1977)), the author has decided to use an adaptation of Piaget's (1969) clinical method. It was felt that this technique would generate the type of rich data source required for categorizing and organizing children's beliefs into a coherent pattern. Furthermore, this data would also be useful for interpreting the results from any pencil and paper questionnaire that might be constructed to follow up on the present study.

Since there are no well defined hypotheses to test, this study must be considered as descriptive and exploratory in nature. Instead, it will attempt to generate hypotheses for further research in a more controlled situation.

1.10 THE GENERAL PROBLEM

This study has two main objectives. The first one is to find out what ideas children have about the concept

of force; that is, how they resolve concrete problem situations involving judgments and explanations about this vectorial quantity. The second is to look for trends or patterns in the development of the concept of force in children from the ages of six to fourteen.

The author is making an assumption that there exists identifiable patterns of ideas common to a number of children. One of the major issues in the study then is how to identify these patterns and interpret them so that they might have some application to classroom instructional practices.

Since the study is descriptive and exploratory in nature, it is not possible to express the problem statement in the form of a specific hypothesis. It is difficult and not really useful to try to predict in advance what kind of beliefs children have about the concept of force. However, the broad problem area can be broken down into more specific aspects in the next section.

1.11 Specific Problems

The children's beliefs about the following specific aspects of the concept of force were investigated. These aspects are expressed in form of a list of research questions.

The specific research questions focus on children's beliefs about:

a) the action of forces as illustrated by the tasks in the study,

b) the action and reaction principle,

c) the idea of equilibrium in a system involving two or more forces,

d) the effect of changing the configuration of weights and the resultant force they exert,

e) the composition of forces.

These research questions are further divided into more specific questions (interview questions in the tasks). These specific questions are fully presented in chapter three. The interview questions cover the specific areas of the concept of force which were probed in the interviews to obtain data on children's beliefs related to the research questions.

1.20 METHODS OF STUDY

1.21 Data Collection

The method chosen to collect the data for this study can be described as a modified clinical method. The clinical method, which requires personal contact with each subject, was thought to be most suitable because it produces a rich supply of information about children's conceptions of physical phenomena. The modification of the method, as described by Piaget (1969), comes from the use of a standardized protocol. Standardized questions (asking the same questions and in the same order to all subjects) are used in this study for two reasons. Firstly, since the search is for children's beliefs of specific aspects of force, it is important that every child in the study have a similar experimental setting including the common tasks and questions. Secondly, it was felt that

a more standardized protocol could be more readily modified for use with a group of students. (For example, a class of students).

Even though, a more standardized protocol was used, the strengths of the clinical interview were maintained where possible by using some open-ended probing questions and adjusting some of the questions to take into account previous responses made by the subject. The interviews were video-taped so that accurate transcripts could be prepared to assist in the analysis of the data.

1.22 Tasks of the Study

The experiments or tasks used in this study were developed and implemented by Piaget *et al* (1973). Three of the nine tasks that they used were included in this study, with some small modifications. These tasks will be described in full in chapter three.

1.23 The Subjects

The primary focus of the study was not to determine the precise age a child is capable of grasping a concept but to determine what typical beliefs are expressed by children when they attempt to predict and explain situations or experiments dealing with the concept of force. Since it is an exploratory study, the representativeness and the size of the group of subjects is not crucial to the results. It is important, however, to work with normal children, from a wide variety of backgrounds. The sample consisted of 32 children (18 boys and 14 girls),

ranging from 6 to 14 years of age. Efforts were made to determine some background information about the child (parent occupation, economic status, etc.) so as to try and avoid the introduction of any systematic biases, such as using subjects who were all in the same socio-economic group.

1.30 EDUCATIONAL SIGNIFICANCE OF THE STUDY

The notion of force along with the notion of movement are some of the first physical experiences that children encounter in their first years of life. They begin pulling and pushing objects from a very early age and through the years gradually construct their own hypotheses about pulling, pushing, exerting pressure, or lifting objects. That is, those ideas are formed in the absence of any formal instruction by the school system. Children formulate their beliefs by acting upon objects and occasionally trying to express their ideas to other children or adults. Since, these beliefs are often very different from those taught formally in the science curriculum, it would be useful for educators to be aware of these primitive beliefs held by children.

The results of the study about the children's beliefs can be applied to problems of educational practice by creating instructional strategies based on knowledge obtained from the study or by providing the science teacher with the ideas that children used to try and account for situations involving forces. If teachers are aware of

children's beliefs, they can respond to given situations in such a way to maintain the basic integrity of the child's ideas. However, they may try to introduce their students to situations or experiments which may illustrate certain anomalies or phenomena they have not considered before. The purpose of such teaching strategies would be to encourage the students to modify or change (perhaps gradually) their existing beliefs in favour of a more encompassing viewpoint.

1.40 LIMITATIONS OF THE STUDY

Since, this is a descriptive study, there is no specific hypothesis being tested; rather, the knowledge claim that is being made centers around: (a) the use of the clinical interview as a valid technique for gathering data about children's beliefs and (b) the analysis of the interview data. With respect to the first issue, the author realizes the limitations of using a rather small number of subjects. It is not possible to generalize to the whole population of school children from the results of this study; however, it provides a starting point for further, more systematic investigations in this area.

The second issue, that of reducing the interview data to a series of statements, in a conceptual profile, is basically a problem of making inferential claims to account for some observed behaviour. There are no external criteria to judge the accuracy or validity of this procedure other than submitting it to others to see if they

agree with the claims being made or encouraging other researchers to try and reproduce our results. One further validity check would be to design a paper and pencil questionnaire, based upon the interview data, to see if these statements make any sense to other students.

CHAPTER TWO

2.00 PSYCHOLOGICAL CONTEXT OF THE STUDY

2.01 Piaget's Theory of Development of Knowledge

To Piaget, the development of knowledge in an individual, is a spontaneous process which occurs as a result of continual encounters between the individual and their immediate environment. This development is something active and dynamic; it is a process that becomes more complex as one grows from childhood to adulthood. As soon as one starts modifying or transforming objects in the environment for our own purpose, and understanding the nature of these transformations, Piaget claims that this involves two types of knowledge -- operational knowledge and physical or experimental knowledge.

2.02 Operational Knowledge

The understanding of the transformations he refers to as operational knowledge. From Piaget's perspective knowledge of operations is very basic and fundamental to the process of individuals coming to know something about the world. Piaget defines operations as interiorised actions which modify the object under study; they are reversible[1] and are always related to other operations - that is, a part of a total operational structure. To Piaget, these

operational structures constitute the natural psychological reality, in terms of which the development of knowledge must be understood.

Piaget has ascribed the process of development of knowledge in an individual in general in terms of four contributing factors: maturation (in the sense of psychological growth), experience, social transmission, and equilibration. None of them, separately, is sufficient to explain the dynamic process of development of knowledge.

Referring to the factor of experience, Piaget defines two kinds of experience which are psychologically very different -- physical experience and the logical-mathematical experience. These types of experiences are responsible for generating the two kinds of knowledge referred to earlier. The logical-mathematical experience is related to the actions effected upon the objects; knowledge is not drawn from the objects but from the set of actions which modify the objects. These are the experiences that operations are made of and they are the beginning of logical deductions. The subsequent steps will consist of interiorizing these actions and then of combining with other actions to form operational structures.

But, these logical experiences must also be supported by concrete material. That is, the physical experiences.

2.03 Physical Knowledge:

Physical experience occurs when one act upon objects and draw some knowledge about the objects by abstractions from the objects. For example, to discover that one object is hotter than another, a child touches both and finds which one is hotter. This is the current use of the word experience, that is, as it is used by the empiricists.

The factor relevant to this study is that of physical experiences or physical knowledge. Children's beliefs about a specific concept have been formed by their experiences with concrete materials that they have encountered through their lives. It is from these sorts of experience that children have naturally developed their ideas about some specific scientific concepts. It is physical knowledge related to specific concepts that curriculum makers and teachers should consider when planning programs to teach these concepts.

No formal claim will be made in this study that the beliefs identified can be construed as proper cognitive structure, in the sense of Piaget's operational structures. This is a descriptive and exploratory study. The aim is in trying to describe the children's beliefs in terms of their physical knowledge; that is, how

children have been constructing their ideas based on the experiences that they have encountered. This study assumes that Piaget's constructionist perspective is helpful in providing a broad theoretical framework for interpreting the interview data. At the end, it is expected to obtain a set of patterns of children's beliefs which can be thought of as one type of representation of the physical knowledge developed by children through their encounters with their environment.

Bohm (1965) also takes a constructionist perspective when analyzing how scientists come to perceive the physical world. In an appendix to his book on The Special Theory of Relativity, entitled 'Physics and Perception', Bohm claims that our perception of the physical world is determined by "a construction of an inner show" (i.e., our mind) that is based upon constant abstraction from our experiences. These abstractions occur at different levels, according to Bohm, ranging from very primitive "immediate perceptions" to higher levels of abstraction which he claims to be the foundation of scientific knowledge. The progression through these levels of abstraction is illustrated by means of a historical example in the following quotation:

"Consider, for example the experience of looking out at the night sky. Ancient man abstracted from the stars the patterns of animals, men, and gods, and thereafter was unable to look at the sky without seeing such entities in it. Modern man knows that what is really behind this view is an immeasurable universe of stars, galaxies, galaxies of galaxies, etc., and that each person, having a particular place in this universe, obtains a certain perspective on it, which is what is seen in the night sky. Such a man does not see animals, gods, etc., in the sky, but he sees an immense universe there. But even the view of modern science is probably true only in a certain domain. So future man may form a very different notion of the invariant totality that is behind our view of the night sky, in which present notions will perhaps be seen as a simplification, approximation, and limiting case, but actually very far from being completely true. Can we not say then that at every stage man was extending his perception of the night sky, going from one level of abstraction to another, and in each stage thus being led to hypotheses on what is invariant, which are able to stand up better to further tests, probings, etc.? But if this is the case, then the most abstract and general scientific investigations are natural extensions of the very same process by which the young child learns to come into perceptual contact with his environment".

The first level of abstraction can be thought of as corresponding to perceptions based merely on sense

impressions or putting in words what is directly observed without adding any explanation nor acting with the purpose of making modifications upon the objects. Later, the subject perceives and embodies certain structural features based not only on abstractions from immediate sensations, but also on a series of abstractions over a more extended set of earlier perceptions. Because they now have a broader range of experience, which has been incorporated into the "inner show", it is possible for a higher level of abstraction to occur.

At each level of abstraction a person views the world through a certain structure of ideas, with which one reacts immediately to each new experience (assimilation and accommodation in Piaget's theory). Thus Bohm concludes: "In this way we come to believe that certain ways of conceiving and perceiving the world cannot be otherwise, although in fact they were discovered and built up by us when we were children, and have since then become habits that may well be appropriate only in certain domains of experience".

A given level of abstraction then summarizes the invariant features of a certain domain of experience which has become habitual or obvious. The children's beliefs obtained in this study might be thought of in terms of these domains of experience. The encountering

of new and various experiences is a continual process of "trial and error" in which what is shown to be false is continually being set aside, while new structures are continually being put forth for criticism.

An example would clarify the ideas presented so far. In a Piagetian experiment, the subjects are given a piece of modelling clay. The experimenter pushes with a metal rod fitted at its end with a disc, while the child does the same from his side. The question is: Will one of us drive his rod in farther that the other, and, if so, which one? Children up to the age of 11 or 12 naturally answer that the adult is stronger and will drive his rod in farther (low level of abstraction). But children 12 years of age and older give more complex explanations such as: "when you push strongly, I resist strongly, and when I push gently you resist gently, so we get compensation" (higher level of abstraction). Both children's answers contain the reflections and perceptions of past experiences and illustrate how knowledge develops.

The underlying assumptions of the present study are based upon a type of constructionist viewpoint which holds knowledge to be a dynamic and active process. The ideas spelled out in this process of development of knowledge, explained by Piaget and Bohm, can be used to assist in the interpretation of the beliefs expressed by the subjects interviewed.

2.10 EDUCATIONAL CONTEXT OF THE STUDY

2.11 Introduction

The process of science curriculum development, particularly the physics school curriculum, could be divided in two main periods in North-America. The precise division line is not clear but it can be said that the rediscovery of Piaget, at the beginning of the 60's, was one of the starting points for the transition. What is the main difference between these two periods? The first one can be called the subject matter centered or simply the subject centered curriculum period, and the second one the child centered curriculum period. Until the new interest in Piaget the disciplinary experts and scholars made many of the curriculum decisions by considering only the nature of the subject area they were teaching. Very little attention was given to the child's psychological development and the ideas they brought to the learning situation. After realizing the significance of Piaget's findings some curriculum makers and teachers considered the child as a more prominent part of the curricular process and this was the start for the child-centered curriculum era.

2.12 The Subject Centered Approach

During the first period (subject-centered or non-child-centered) two kinds of approaches were used to decide about curriculum content. They were the historical or chronological approach and the logical (logical from the perspective of the discipline) approach.

When using the historical approach, the curriculum makers would suggest that the curriculum content should be based on the chronological order in which the concepts were developed. It was assumed that students could best learn these concepts following the same historical order without any further pedagogical analysis. For example, in physics, the classical or traditional order of content is: measurement (time, distance, mass), mechanics, heat, light, sound, electricity, magnetism, structure of matter and structure of the atom. Some curriculum makers and teachers thought that this was the "natural and logical" order for teaching them at school. From here, it is clear that there was no consideration of the child. The function of the child was to learn what it was supposed to learn, usually by memory, since the child's psychological development was not considered at all[2].

The logical approaches differed from the historical in that other aspects were considered in respect to content and its order. One logical approach was to put the emphasis on the scientific method. This method, the same as was used by scientists, was imposed at school. It was assumed that if students had the choice to "use" it, they would understand what science was about and they had a "tool" to understand the physical world. This assumption could be correct but the implementation of it was incomplete due to the following reasons:

little direction was given, students' ideas were not considered, teachers were ill-prepared to teach science, laboratory space was insufficient, and equipment was scarce and sophisticated (only teachers were allowed to use it); thus, little of value was achieved.

In 1930 the National Society for the study of Education Yearbook, entitled "A Program for Teaching Science", had a profound effect upon the field of science education. This program was thought to influence the direction of science education and research for two decades. The Program Committee took the stand that objectives and curriculum content should be formulated in terms of major ideas, concepts and principles that control the understanding of scientific facts and their application in the world. In developing new courses of physics it was suggested that a few large concepts be used as organizing themes, then, different logical approaches could be developed following these themes. Examples of large concepts were: "the indestructibility of matter and energy", and "all physical phenomena are based upon energy transformations". The object of using these themes was to avoid the traditional compartmentalization of physics (historical approach) into short, separate, unrelated topics. Unfortunately the Second World War stopped the implementation of this program.

The main shift sought with the new program was to change the rationale of science teaching, moving from a philosophical or theoretical approach, lacking student involvement in experimentation, to a more laboratory-oriented approach illustrating Newtonian physics.

While there was the desire to consider the child in the development of the curriculum there was not sufficient knowledge of how to do it. Dewey stated that we must teach to the "whole child" and that individual differences should be considered in the teaching process. This desire to improve the teaching of science was continued during the 50's with the so-called curriculum revolution.

One of the purposes of the curriculum revolution was to bring education into the 20th century by considering the latest advances in the fields of knowledge that affect the process of education. Particularly most recent advances in natural sciences[3] were considered when planning the new school curricula. Even considering these important changes, the child was still not at the centre of the teaching-learning process. Curriculum makers, educators, and scientists were thinking only in terms of the last advances in their respective fields and new ways how to present them to the children. But neither the child's psychological development nor their ideas about scientific

concepts were being seriously considered yet. It is true that the Discovery Methodology was highly recommended, where children had the opportunity to show their interests and abilities but there was no interest to find out the alternative ideas that children have in some content areas. It was a sort of "directed discovery", that is, children should discover what the teacher leads (sometime indirectly) them to discover.

Another logical approach to develop a new curriculum was often based upon an analysis of the structure of the discipline (Bruner, 1960). One particular logic was to try and establish a hierarchical order of concepts, going from the simplest concept to the most complex ones. Again, the disciplinary experts decided about this hierarchical order. There are many current school physics textbooks written using this approach. To mention only some of them: Barton and Raymer(1966), Krauskopf and Beiser (The Physical World, 1960), MacLachlan, McNeill and Bell (Matter and Energy, 1963), Bawden and Fredericks (1966).

Unfortunately some science teachers took the textbooks as the only guide and followed the book page by page. In these cases, the textbook, which usually represents one or two persons' point of view, was the whole curriculum. Another example but developing another logical order of content was the PSSC Physics Course[4].

The staff developing this course defined four large concepts: The Universe, the wave nature of matter, the particulate nature of matter, and the electromagnetic nature of matter. Using these themes they structured the PSSC course. The evaluations made on this course have demonstrated that it can be considered a well-designed course for students who are very interested in the field of physics but not for the majority of high school students. After realizing some of the defects of the PSSC course some scientists and teachers met at Harvard University to discuss the creation of a completely new type of physics course. This new course, called The Project Physics Course[5], would take a more humanitarian point of view. The content of the course was also structured around large concepts. But even when it was planned in such a way that children could advance at their own pace, the psychological development of students was not considered. The Project Physics Course is considered by some to be the best effort to improve the physics teaching, and it has been subject to a number of evaluation studies. (Welch and Walberg 1968; Welch, Walberg and Watson, 1971; Welch, 1968; Walberg, 1967, Welch and Rathman, 1968; Welch, 1967).

2.13 The Child-Centered Approach

The child-centered curriculum might be characterized by the importance placed upon the psychological and mental development of children as basic inputs

when planning the school curriculum. Then, this period is characterized for using a psychological approach. This does not mean that everywhere this approach was being used, but at least, there were national efforts to consider it seriously and some science curriculum supported by National Foundations were created.

Some elementary science programs have attempted to incorporate some of the Piaget's conceptions in their programs, (for example, Science Curriculum Improvement Study (SCIS), the Nuffield Primary Science, 5/13). This child-centered period is still in its infancy. The investigation of ideas that children hold about scientific concepts is still going on[6].

The child-centered approach has been following two different directions in the last years. One suggests that curriculum content ought to be matched to the stage of development of the learner (Piaget's stages of development). To illustrate, Renner and Lawson (1975) have proposed as a necessary condition for selection of curriculum content at the secondary or post secondary levels that the content be "useful for helping students" in using formal reasoning abilities. There are two problems associated with this type of application of Piaget's theory to curriculum problems. The first is related to the low level of correlation

commonly found among Piagetian tasks which are supposed to depend on the same structures (the decalage problem or regression to a lower stage of development). The second problem is related to the difficulty of classifying given subjects according to developmental stage (the criterion problem) (Hobbs (1977), Chiappetta (1975), Howe (1974)).

The second direction or approach is based on developmental studies of particular concepts or content. One of the concerns here is to identify consistent patterns of development (children's beliefs) of the particular concepts in question. What are the children's key ideas in the process of attainment of the concepts? If this information is obtained then what are the appropriate strategies to teach the concepts? What sequences are appropriate? In this kind of research, stages of development with typical age ranges could be determined but this is not essential. However, the use of Piaget's more general theory of intellectual development might help in interpreting some of the children's beliefs, since, it is a very powerful tool for analysis of interview data (clinical method).

The present study is of the latter type since the major interest is in trying to identify consistent patterns of student beliefs about the concept of force. These patterns should contain information of how children

perceive some aspects of the concept of force at different ages. Through the years, the children would be expected to develop a more complete understanding of the concept, and their explanations and predictions should reflect this change.

This period of child-centered curricula has just started with the consideration of the psychological development of the child in the planning of new school curricula. If the ideas that children have about physical concepts are included in the school curriculum then children can be thought of as genuine participants in the teaching-learning process[7]. To reach this stage, it is necessary to do much research in the direction of exploring children's beliefs on concepts included in the school curriculum. The present study is focusing upon that particular problem.

NOTES

1. Reversible action: action that can take place in both directions. For example: adding or substracting, joining or separating.

2. The teaching of physics as a secondary school subject was given greater status when, in 1872, Harvard University made physics an acceptable subject for entrance requirement. The general agreement then was to teach the concepts in a historical order of development. Physics by 1900 was taught as a means of disciplining the mind with more and more emphasis being place upon mathematical and quantitative treatment of the expense of informational and experimental treatment. Millikan thought that the sole purpose of high school physics should be to interest and train the pupil in observation of a great number of physical phenomena. The Report of the Commission on the Reorganization of Science in Secondary Schools published in 1920 shifted the emphasis in physics teaching away from subject matter as such towards the social utility concept. One of the reasons for the shift was that content had too largely been handed down by tradition through textbooks. It had been largely based on logical organization, neglecting interests of pupils and laws of learning. As knowledge in physics grew, teachers thought it necessary to include more and more material in the physics courses.

3. Philosophy, political and economical sciences, sociology, psychology were also considered.

4. An excerpt from the Appendix 3, PSSC book, 1960: "During the fall of 1956 and the winter of 1957, under the leadership of the PSSC Steering Committee, research physicists and physics teachers (author's remarks: "experts in the field") - often they are the same people - outlined drafted, and discussed many of the ideas that now appear in this book". After reading the whole appendix, there is no mention of considering knowledge that children bring to the learning situation.

cont'd.....

NOTES - continued...

5. The Project Physics Course is based on the ideas and research of a national curriculum development project that worked in three phases. First, the authors - a high school physics teacher, a university physicist, and a professor of science education - collaborated to lay out the main goals and topics of a new introductory physics course. They worked from 1962 to 1964, and the first version of the text was tried out in two schools with encouraging results. In the second phase, a large number of collaborators (high school physics teachers, astronomers, chemists, historians, philosophers of science, science educators psychologists, evaluation specialists, engineers, film makers, artists and graphic designers) were brought together from all parts of the nations, and the group worked together for over four years under the title Harvard Project Physics. In the last phase, the three original collaborators set out to develop the version suitable for large scale publication by taking into account the evaluation results from the tryout carried out from 1964 to 1968.

6. A study conducted by Raven (1967) about the concept of momentum showed that children between 5 and 8 years old go through the following concept sequence: momentum, conservation of matter, proportional use of mass and speed with momentum held constant, and speed. Whereas one logical - hierarchical sequence for teaching the concept of momentum might be: conservation of matter, speed, proportional use of mass and speed with momentum held constant and finally momentum. Piaget, after many experiments with children, has found that the sequence of some physical and mathematical ideas developed by children does not correspond to the chronological or historical order (from the Greeks to the present) but, conforms to an order that links the more fundamental ideas to the derived ones.

7. There has been very little research to look for these strategies to produce a desired shift when a child has "misconceptions".

CHAPTER THREE

3.00 INTRODUCTION

This chapter deals with the method of collecting the data. Since a modified Piagetian clinical technique was used, some background about this method is presented. The selection of the subjects is explained, and the tasks and their respective protocols are developed in full.

3.10 THE CLINICAL METHOD

In the last decades, there have been two schools of thought of how one should proceed with the study of cognitive behaviour : one based on a multivariate model, in which the most "relevant" variables are considered and others are controlled. The 'relevant behaviours' are often studied in contrived experimental situations, or a set of a priori categories are used to classify behaviour occurring in a natural setting. Once, this measurement procedure has occurred, the resulting numbers are manipulated according to some statistical model[1].

A second approach can be characterized as being more exploratory or descriptive in nature. The focus of this approach is to identify relevant variables and potential hypotheses for subsequent studies. One useful technique which is increasing in popularity, is the clinical interview method. This technique requires the interviewer to actively explore the thoughts and beliefs expressed by the subject about the

topic of interest (Piaget, 1969).

In a classical Piagetian clinical interview, the interviewer and subject engage in conversation about what the interviewer thinks is relevant to his investigation. In the present study, the interviewer has a fixed set of questions (standardized protocol), and so might be considered a modified clinical method. However, the strengths of the clinical interview were maintained by asking probing questions in an attempt to insure the reliability and validity of the students' responses. This non-standardized probing also served to uncover deeper insights which often are not apparent from the literal interpretation of the dialogue. In using this method, the interviewer attempts to form judgments, or hypotheses in his own mind about the interviewee's thinking and then systematically sets out to check them out. Consequently, the interview generates much more data than an experimental study, however, the analysis of these data is often difficult and time consuming.

The most serious objections to the clinical method are that it is unstructured, subjective, and prone to experimental bias. However, if the protocol for the interview is planned in advance and similar lead questions are given to all the subjects, then, some degree of control is obtained.

Less subjective, insightful, and interpretive judgments about children's responses are obtained

if (1) experienced interviewers proceed with the interview, and (2) videotape is used, to replay and check all behaviour occurring during the interview.

The present study relied upon the use of a videotape recorder to record the overt behaviour of the interviewer and the subject. This objective record allows others access to the raw data for the purpose of disputing or developing alternate claims to those made by the investigator to account for the observed behaviour.

In summary, all the data necessary for this study was obtained from the videotapes filmed during the interviews.

3.20 THE SAMPLE

Two important aspects were considered in selecting subjects for the sample:

1) the subjects were all healthy and well-adjusted children, and
2) they had not been taught formally the concept of force, including the subsidiary concepts such as: action and reaction, equilibrium, and composition of forces.

These criteria were checked by asking the teacher about the physical and emotional state of the child and whether they had studied forces that year. The child was also asked in the course of the interview if he had been asked "questions like this" at school.

As indicated in Chapter One, the objective of the study

is not to determine at what precise age a child grasps a particular concept, but to determine typical beliefs expressed by children when they attempt to predict and explain expected results of experiments dealing with the concept of force.

The sample was not randomly selected from a well defined population; therefore, "statistically speaking", the results obtained are valid only for the subjects included in the sample. It was decided to proceed in this way, since, this is an exploratory study. However, efforts were made to avoid any systematic bias by not selecting all subjects from the same school, or using schools located in one particular area of the city.

3.21 Characteristics of the Sample

The Ss for the sample were taken from the following areas in greater Vancouver: Port Coquitlam, Burnaby, East Vancouver and Point Grey (university district). The sample is shown in Table 3.1, including age and sex distributions.

To facilitate the presentation of ages, it was decided to consider the years completed only; for example, a subject 8 years and 11 months, was considered 8 years old. Due to this procedure the balance of boys to girls varies slightly from one age to the next. Since sex was not considered to be a major independent variable no deliberate attempt was made to match the groups. The major concern

TABLE 3.1

The Age, Grade, and Sex of Subjects

Age (years)	School grade	Sex boys	girls	Total
6	2	1	1	2
7	2	2	2	4
8	3	2	1	3
9	4&5	4	1	5
10		1	4	5
11	6	2	1	3
12	7	2	2	4
13	8	2	2	4
14	9	2		2
Total		18	14	Total: 32

was to try and establish a typical sample of subjects.

There was a considerable amount of diversity among the subjects with respect to the socio-economic background and levels of achievement in school. The socio-economic data was inferred from informal conversations with the children prior to and after the interviews, in particular focusing upon their parents' occupational status. The teachers were asked to select children from a wide range of intellectual ability. This was clearly demonstrated during the interviews, when some children attempted to provide a full, rich description of their ideas while others were concent to respond to many questions posed by the investigator with a simple response and made no attempt at an explanation for their prediction.

3.30 DESCRIPTION OF THE TASKS

The tasks that were used in this study were modifications of those described by J. Piaget *et al* (1973).

TASK ONE

Apparatus: A rectangular wooden board with a pulley at one end was used (see Figure 3.1). A blue plastic reference plate is attached at one end to an elastic band which is held by a thumb tack. The other end of the plate is attached to a string, which goes over the pulley and hangs down below the board. Three metal hooks spaced 10 cm apart are attached to the end of the string. Three or more washers (each weighing approximately 50 g) are used to hand upon the hooks.

This task was specifically chosen to explore the children's beliefs about the concept of the action of a force, the action and reaction principle, and conservation of weight.

B: board
P: plate
S: string
Pu: pulley
H: hooks

E: elastic band
T: thumb tack
W: washers (50 g)

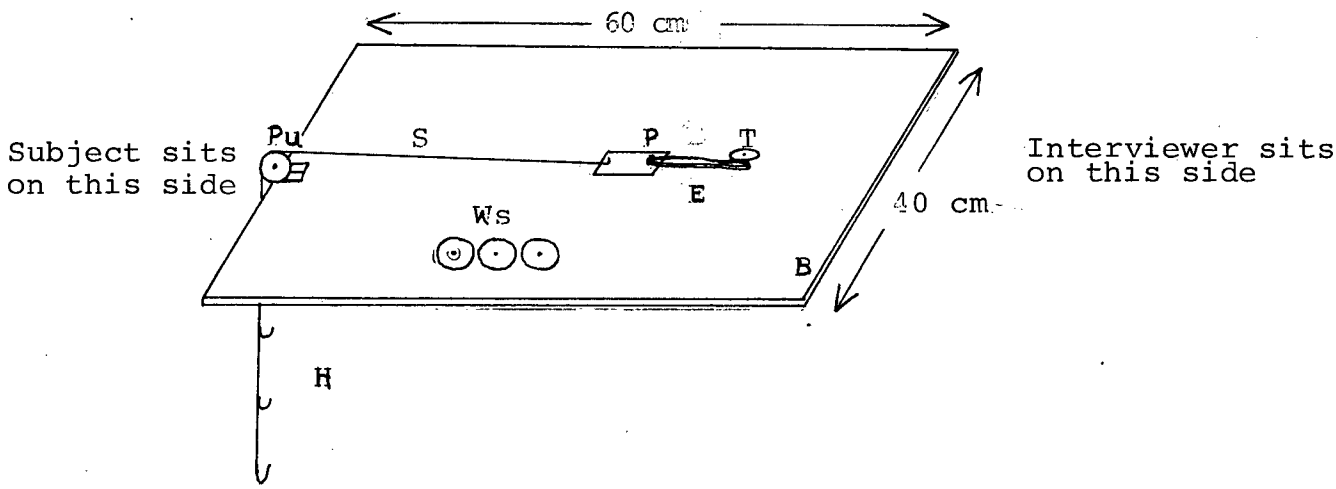

Figure 3.1

Materials for Task 1 and Interviewer's and Subject's Position

---

Interview Protocol for Task One

As an introduction to each of the tasks the interviewer familiarized the subject with the task materials.

Research Question: Concept of the Action of a Force

I: Interviewer, S: Subject

I_1: Could you describe to me what is going to happen if you put this washer in the upper hook?

I_2: Could you show me how the blue plate is going to move? How far?

I_3: (after S placed the washer) What is the washer doing at this moment? (The interviewer then probes further to establish as precisely as possible the nature of the child's beliefs, using the child's words when possible. The child's words are also used in subsequent discussions when it is considered appropriate to do so).

I_4: You told me that the plate moved a little bit, can you explain me why it did not continue moving? (Or why did the plate stop where it did?)

Alternative I : If S mentions that the washer and the elastic are pulling the plate in opposite direction.

$I_{5.0}$: What do you mean by that"?

(I can probe here : number of forces acting upon the plate, magnitude of forces, and direction of forces)

Then I ask question $I_{5.1}$

Alternative II: If S does not mention the action of the elastic band upon the plate.

$I_{5.1}$: The plate is stationary now. Is the washer still pulling?

I_6: If you put one more washer in the same hook, what do you think is going to happen? How far will the plate move this time? (I hold the plate while the S puts on the washer and then lets it go to permit the plate to move).

I_7: And if you put one more washer in the same hook? (I again hold the plate until prediction is made).

I_8: If you remove one washer, what will happen in this case?

Research Question: The Action and Reaction Principle.

I_9: You said before that the washers are pulling the plate, what else is pulling?
(or : Is anything else pulling?)

Alternative I: If S realizes that all objects in the task are pulling each other:

$I_{10.0}$: What objects are pulling the plate (the elastic band, the string)?

$I_{10.1}$: In what direction are they pulling?

$I_{10.2}$: You said that the string is pulling the plate and that the plate is pulling the string: Are they pulling it the same way or different?

Alternative II: If S does not realize that all objects are pulling each other, go to question I_{11}.

Probing Conservation of Weight:

I_{11}: What do you expect is going to happen to the plate if you put the same three washers in the lowest Hook? Why do you think so? (I hold the plate

while S moves the washers).

I_{12} : What do you expect is going to happen if you put one washer in each hook? (I hold the plate while the S attaches the washers). Why do you think so? Why are they going to pull the same (or more, or less)?

TASK TWO

Apparatus: A rectangular wooden board; 2 pulleys, one in each end; blue plate at the centre has a string attached to each end leading over the two pulleys; each string has 2 hooks about 10 cm spaced; six washers are needed (see Fig. 3.2).

This task was specifically chosen to explore the children's beliefs about the concept of equilibrium when forces in opposite direction are acting upon an object. Concept of action of forces and composition of forces are also probed with this task.

B : board Pu : pulley
P : blue plate H : hook
S : string W : washer

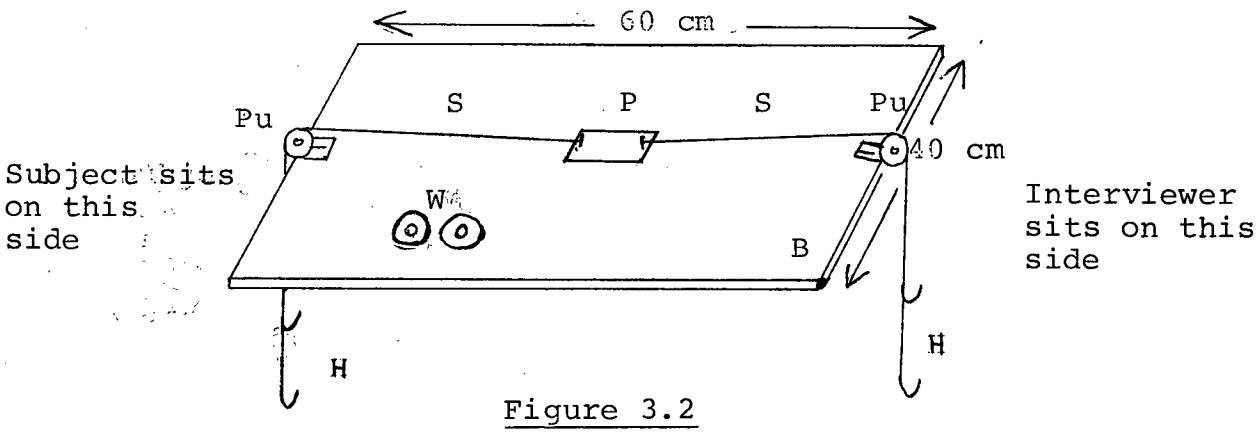

Figure 3.2

Materials for Task 2 and Interviewer's and Subject's Position

Interview Protocol for Task Two

Research Question: Concept of equilibrium

I_1: Could you describe to me what is going to happen if you put this washer in the upper hook on your side?

Alternative I: If S predicts that the blue plate will move all the way towards him or her:

$I_{2.0}$: Why? what could you do to keep the plate stationary about here (closer to the centre of the board)?

Alternative II: If S predicts that the blue plate will move towards him or her but not all the way;

$I_{2.1}$: Why is it going to stop there and not farther on?

Then go to question $I_{2.0}$

I_3 : (After S has placed one washer on each side). If you put one more washer in the upper hook in your side, what do you expect is going to happen?

Why?

I_4 : What could you do to keep the plate stationary here (closer to the centre)?

Why do you suggest that?

I_5 : You have 2 washers and 2 hooks in your side, the same in my side, what do you expect is going to happen if you put one washer in each hook? Why do you think so?

I_6 : (I move the plate about 5 cm along the string towards the subject and hold the plate at the new position):

What will happen if I let it go?

Why?

Alternative I: If S predicts that the plate will move in either direction or go back to the centre:

$I_{7.0}$: Why do you think so? Is anything else pulling the plate? How far is it going to move?

Alternative II: If S predicts that the plate will stay on the new position:

$I_{7.1}$: Could you tell me why it won't move?

I_8 : (I move the plate about 5 cm in a direction perpendicular to the strings and hold it there): What do you expect is going to happen if I let it go in this case? Why do you think so?

TASK THREE

Apparatus: A circular board (40 cm diameter) with a hole right at the centre, 3 pulleys, which can be placed at various positions around the board; a metal ring is attached to 3 strings and is held at the centre by a wooden peg; each of the strings go over the pulleys and have a hook at the end; fifteen washers are needed. (See Fig. 3.3).

This task was chosen specifically to explore the children's beliefs about the concept of composition of forces. Their concept of equilibrium can also be probed with this task.

Interview Protocol for Task Three

Note: S was told that no changes would be permitted on I's side of the board when trying to keep the ring at the centre without being held by the peg.

Alternative I: If S predicts that the plate will move in either direction or go back to the centre:

$I_{7.0}$: Why do you think so? Is anything else pulling the plate? How far is it going to move?

Alternative II: If S predicts that the plate will stay on the new position:

$I_{7.1}$: Could you tell me why it won't move?

I_8 : (I move the plate about 5 cm in a direction perpendicular to the strings and hold it there): What do you expect is going to happen if I let it go in this case? Why do you think so?

TASK THREE

Apparatus: A circular board (40 cm diameter) with a hole right at the centre, 3 pulleys, which can be placed at various positions around the board; a metal ring is attached to 3 strings and is held at the centre by a wooden peg; each of the strings go over the pulleys and have a hook at the end; fifteen washers are needed. (See Fig. 3.3).

This task was chosen specifically to explore the children's beliefs about the concept of composition of forces. Their concept of equilibrium can also be probed with this task.

Interview Protocol for Task Three

Note: S was told that no changes would be permitted on I's side of the board when trying to keep the ring at the centre without being held by the peg.

B : circular board
S : string
Pu: pulley
H : hook
r : ring
P : wooden peg
W : washers

R stands for the set of washers at S's side F_1 and F_2

F_1 and F_2: stands for the set of washers in each hook at I's side

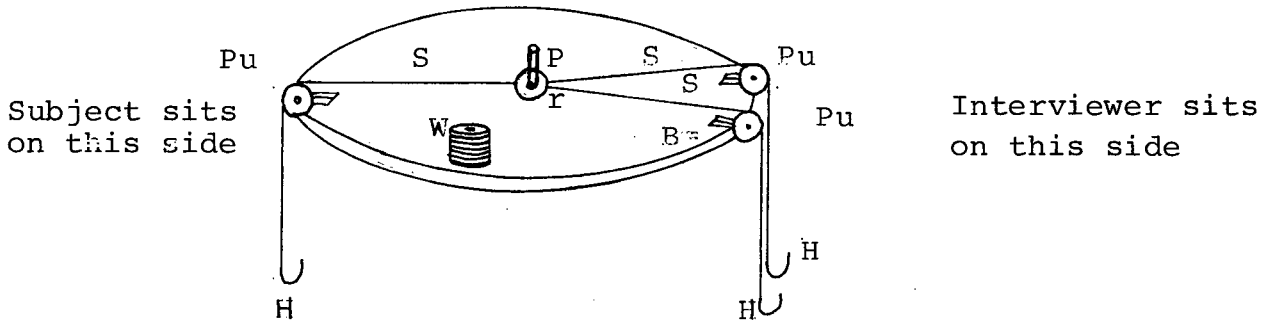

Figure 3.3
Materials for Task 3 and Interviewer's and Subject's Position

Research Question: The concept of equilibrium with 3 forces acting in opposite direction.

I_1 : (Initially the two pulleys at I's side are together side by side in such a way that the strings at I's side are parallel or forming an angle of 0°, the other pulley is just in the opposite side at S's side. The I puts 3 washers in one of the hooks in his side): Could you describe to me what is going to happen if I pull out this peg? Why?

(The peg must be always holding the ring in the middle. After each experimental situation, the peg must be put back to hold the ring in the centre).

I_2 : What could you do to keep the ring in the middle? Why do you think so?

I_3 : (If S has succeeded: R = 3 Ws, F_1 = 3 Ws. Then, I put 3 washers in the other hook in his side): What will happen in this case if I pull out the peg?

I_4 : What could you do to keep the ring in the middle?

<u>Research Question</u> : The concept of composition of forces.

I_5 : (If S has succeeded : R = 6 Ws, F_1 = 3 Ws, and F_2 = 3 Ws. Then the I moves the pulleys on his side until each string forms an angle of 45° with the initial position, the angle formed by the two strings is 90°): If I pull out the peg, what do you expect is going to happen? What could you do to keep the ring in the middle without being held by the peg?[2]

I_6 : (If S has succeeded: R = 4 Ws, F_1 = 3 Ws, and F_2 = 3 Ws. Then, I moves the pulley on his side until the angle formed by the strings is 120°): If I pull out the peg, what do you expect is going to happen? Why?

I_7 : (If S has succeeded: R = 3 Ws, F_1 = 3 Ws, and F_2 = 3 Ws. Then, the I moves the pulleys on his side until the angle formed by the strings is 180°). If I pull out the peg, what do you expect is going to happen? Why? What could you do to keep the ring in the middle? Why do you suggest that?

I_8 : (If S has succeeded: R has no washer, F_1 = 3 Ws, and F_2 = 3 Ws. Then, the I moves the pulleys on his side

until the angle formed by the strings is 240°. It is a similar situation to question I_8 in Task Two): If I pull out the peg, what do you expect is going to happen? Why? How far will the ring move? Why?

I_9: (The I moves back the pulleys to his side, leaving the strings on his side forming an angle of 90°, and putting 3 Ws. in F_1 and F_2, and 4 Ws. in R. He reminds S that in this position, before the ring would stay in the middle. Then, the I moves the pulleys on his side until the strings form an angle of 75°): If I pull out the peg, what do you expect is going to happen? Why? What could you do to keep the ring in the middle? Why do you suggest that?

I_{10}: (If S has succeeded: R = 5 Ws, F_1 = 3 Ws. and F_2 = 3 Ws. Then, the I puts one more washer in F_1): If I pull out the peg, what is going to happen? Why? What could you do to keep the ring in the middle? Why do you suggest that? (In this case, S must add one washer on his side (R = 6 Ws) and moves the pulley on his side about 3 cm. to bring the ring to the middle position.

3.40: <u>THE FORMAT OF THE INTERVIEW</u>

Most of the interviews were carried out on U.B.C. Campus (Faculty of Education). Only six of the interviews were made in a High School, located in East Vancouver.

The experimenter and the subject were the only ones present during the interview and the subject agreed to allow the interview to be recorded by videotape. The

average interview required approximately 30 minutes to complete. In each interview the investigator talked informally with the child for ten or more minutes before formally initiating the interview. In this informal talk it was explained to the child that the interview was not a test; that he or she must feel free to answer the questions; and that their responses would not be marked in any way. Some simple biographical data was also collected in this informal chat. The child was told by the investigator that he was interested in his or her ideas about the results of some "games or experiments that we would be doing". They were also told that the purpose of the interview was to create new ideas and methods for teaching science.

NOTES

1. Power (1976) in an article contrasting different paradigms in educational research characterizes the agricultural-scientific model (multivariate model) in following quotation: "The idea that one can utilize the powerful intellectual and statistical tools of sciences in studying educational as well as natural phenomena is a logical outcome of the success story of science ..... The fact that we possess powerful statistical tools which permit us to introduce many variables in complicated designs does not mean that we should add new variables without careful thought".

2. In this case, if S feels lost and the task seems difficult for him or her, the interview must be concluded. When I takes this decision, he must be smooth and polite with S, in such a way that S does not feel that he or she failed. But before taking the decision to end the interview, I must give enough time to S, since, it is securely the first time that these Ss encounter this kind of experiment. It is adivisable that Ss have the chance of trying 2 or 3 times to bring the ring to the middle before ending the interview.

CHAPTER FOUR

4.00 ANALYSIS OF DATA

4.10 Summarizing Interview Data

To analyze the interview data, an attempt was made to identify common or typical responses to the interview questions to see if groups of children seem to hold a similar view of force.

To do this, it was necessary to consider the several different aspects of the concept of force which were covered by the three tasks in this study. That is, the broad concept of force has a structure, which contains other major concepts. For instance, action and reaction, equilibrium, can be thought of as major concepts. Each major concept contains other subsidiary concepts (variables relevant to the major concepts). It is clear that the three tasks used in this study did not begin to cover all the aspects of the concept of force.

The aspects of the concept of force covered by the 3 tasks were organized in a structure which was called a Conceptual Profile of the concept of force, which is a categorization of all the children's beliefs according to content-oriented categories.

A Conceptual Profile, then, is one way of representing the pattern of beliefs of a group of children with respect to selected aspects of the concept of force.

4.20 Format of the Conceptual Profile

A conceptual profile was created by starting out with the major concepts of concern. These major concepts were then broken down into concepts which are subsidiary or sub-topics related to the major concepts and were described in terms of the tasks performed by the subjects..

4.30 A Conceptual Profile for the Concept of Force

1.0. CONCEPT OF THE ACTION OF A FORCE

- 1.1 The effect of hanging one washer upon the system in task one.
- 1.2 Relationship between the forces exerted and the number of washers added in task 1.
- 1.3 The effect of hanging one washer on subject's side in task 2.

2.0. CONCEPT OF ACTION AND REACTION

- 2.1 Reciprocity of forces by pairs of objects.

3.0. CONCEPT OF EQUILIBRIUM

- 3.1 The effect of the weight of the washer once the plate has stopped moving in task 1.
- 3.2 Identification of all forces acting upon the plate in an equilibrium position in task 1.
- 3.3 The effect of forces with equal magnitude acting in opposite directions in task 2 and task 3.
- 3.4 What forces are acting in an equilibrium situation in task 2.

4.0. CONCEPT OF THE EFFECT OF CHANGING THE CONFIGURATION OF WEIGHTS.

- 4.1 The effect of moving the set of 3 washers (Ws) from the upper hook to the lowest one in task 1.
- 4.2 The effect of putting one washer in each of the hooks in task 1 and task 2.

5.0 CONCEPT OF COMPOSITION OF TWO FORCES.

5.1 The effect of displacing the plate in a perpendicular direction respect to the original line of forces in task 2.

5.2 The composition of two forces with equal magnitude (the resultant force will be balanced by a third force) and forming the following angles: 90°, 120°, 180°, 240°, and 75° in task 3.

5.3 The composition of two forces with different magnitude (the resultant force will be balanced by a third force) and forming an angle of 75° in task 3

Actually, all the major concepts could be covered by each of the three tasks, but each task was prepared especially to try some specific aspects of the concept of force. However, when it corresponds, a child's belief shown in one of the tasks could be proven in the other tasks. This is recommendable, particularly, when the experimenter has some doubts about the strength of the child's belief.

4.40 Results Following the Conceptual Profile

The results are presented as responses to questions about the major concepts and the subsidiary concepts of the conceptual profile.

4.41 Format of the Results

1. Major concept
2. Subsidiary concepts
3. Interview questions related to the specific subsidiary concepts
4. Total number of subjects (abbreviated as T) answering the interview question.

5. Typical children's beliefs* (children had different beliefs about one specific subsidiary concept. Here, these different beliefs are presented as belief A, belief B, etc).

6. Number of subjects subscribing each particular belief.

   Abbreviated as Ss.

7. Excerpts from the interviews. Passages from two or three interviews belonging to subjects in Ss were chosen

8. Comments about the subsidiary concepts and the major concept.

4.42 Results of Interview Data

1.0 CONCEPT OF THE ACTION OF A FORCE.

1.1 The effect of hanging one washer upon the system in task 1.

Interview question: Could you describe to me what is going to happen if you put this washer in the upper hook?

T = 31

---

* The children's beliefs were mainly obtained from the predictions, that is, their first reactions to the questions; the interviewer asked sometimes other questions to challenge the subject's beliefs to see how strong they were. Sometimes, the subject changed his or her idea due to the "other questions". Where it was possible, an attempt was made to look for the same ideas in other situations. Caution was exercised in phrasing the proving questions to avoid giving "clues" to Ss.

Typical Children's Beliefs*

1.1.A. "The washer will go down, the plate is going to move a little and the elastic band will stretch"

Ss = 31, (2-6y; 4-7y; 4-8y; 5-9y; 4-10y; 3-11y; 4-2y; 3-13y; 2-14y)

Note: - (2-6y) means 2 subjects 6 years old, and so on.

- About the ages: Completed years were only considered. A subject was not considered a year older until his or her birthday; example: a subject 10 years and 11 months old was considered 10 years old.

Excerpts:

Doug (8,0): "The washer will go down and will take the blue plate and dragging alone and the elastic is going to stretch".

Comments:

All subjects predicted what it actually happened, the difference among them was the prediction of the plate's displacement. Some of them foretold 10 cm., others 0.5 cm., and the others in between.

For all subjects it was clear that a force applied upon the system would cause movement.

---

* The typical children's beliefs were phrased by the experimenter, who tried to include in one statement similar beliefs of a group of children holding that idea and to use children's words where possible.

1.2 Relationship between the forces exerted and the number of washers added in task 1.

Interview Question:

Could you describe to me what is going to happen if you put one more washer in the same hook?..... and if you put one more washer?

T = 31

Typical Children's Beliefs

1.2.A. "The plate will move that distance because for each washer we put before it moved that distance (the same distance)"

Ss = 29 (2-6y; 3-7y; 4-8y; 5-9y; 2-10y; 4-11y; 4-12y; 3-13y; 2-14y).

Excerpts:

Chantalle (6,6): "... with one W the plate moved to here (about 2 cm) with 2 Ws., it moved to her (2 cm), then, with one more, it has to move the same distance...."

Chris (8,4): "... plate moves always the same distance with each W added..."

1.2.B. "Plate will move more by adding more washers but not the same distance".

Ss = 2, (1-7y; 1-10y)

Excerpts:

Frank (10.4): ".... only that much (plate's displacement about 2 cm) because this washer is not too heavy... (he agreed that all Ws. were equal but he chose all the plate's displacements totally different).

Comments:

- In 1.2. A, the plate's displacements are proportional to the number of Ws. added, then, the forces exerted are proportional to the amount of Ws. added.

- In 1.2.B, the plate's displacements chosen by the two Ss. showed that they don't see the proportionality between the two variables

- 29 our of 31 Ss. saw the proportionality between the forces and the numbers of washers.

1.3. - The effects of hanging one washer on S's side in task 2.

Interview Question:

What do you expect is going to happen if you put one W on the upper hook in your side?

T = 31

Typical Children's Belief:

1.3.A. "The plate will move this way (toward the S) about that much (Children's predictions varied between 1 cm to 10 cm.) because this W is not heavy enough".

Ss:18, (1-6y; 3-7y; 1.8y; 5-9y; 4-10y; 1-11y; 1-12y; 2-13y).

Excerpts:

Natalie (7,10): "the plate will move that much (2 cm.) because there it moved before with one washer (she was referring to task 1)"

Doug (8,0): "Plate will go to here (1 cm) because this washer is heavier than those 2 hooks (at E's side)".

Betty (12,11): "Plate will move toward me that far (half-way) because there is no weight in your side".

1.3.B. "The plate will stay there because there is only one W".

Ss = 3, (2-6y; 1-7y).

Excerpts:

Heather (7,0): "Plate won't move because there is only one W".

1.3. C. "Plate will move toward me all the way because now there is weight only on my side".

Ss. = 9, (1-8y; 1-10y; 1-11y; 3-12y; 1-13y; 2-14y).

Excerpts:

Jenny (8,7): "Plate will move all the way because now there is the other string, before it was the elastic".

Vicky (10,4): "Plate will fly toward me because there is weight only in my side".

Rick (12,10): "Plate will move all the way because one W weighs more than those hooks".

Comments:

- Some subjects answered as if the elastic band were still on, referring to task 1, even when, the I reminded them about the change, some of them still kept their answers.

- Subjects answering 1.3.A and 1.3.B do not have yet the concept of net force, which produces the net movement.

- Perhaps, for the 18 Ss. answering that the plate would move not all the way, the presence of the string and the hooks on the opposite side was a distractor. They thought these (string & hooks) were pulling, not much like the washer, but enough to stop the plate moving all the way. A suggested change here, for further research, might be: present a similar situation to them but without the string and hooks at I's side, and later, add the strings with the hooks and ask the same question.

- 9 out of 31 Ss. said" "there is weight acting only in my side, then, the plate would toward me all the way". These Ss. saw the action of one force only acting upon the object.

Overall Comments for the Major Concept Action of a Force

- There is the possibility that the setting of Task 1 which included the thumb tack and the elastic band produced a "fixed" idea about the action of forces existing at I's side in some subjects. This was shown in the answers given to question 1.3 in task 2. Even when some Ss. were reminded about the differences between the two tasks, some Ss. still kept their ideas.
- The results obtained about the 3 subsidiary concepts can be summarized now: When applying 2 forces in opposite directions upon an object, the plate will move in the direction of the greater magnitude, the net force acts only until certain point and then, it stops acting; (it is not clear as to reasons why); the weight of a set of similar objects is proportional to the number of objects.
- Children do not talk about direction of movement, instead they say: way of movement, for example: "the plate is going to move that way".

2.0 CONCEPT OF ACTION AND REACTION

2.1 Reciprocity of forces by pairs of objects.

This subsidiary concept has two interview questions.

a) Interview Questions: You told me that the washer was pulling (see comments) the plate, what else is pulling at this moment?

T = 28.

Typical Children's Belief:

2.1.A. "The string is pulling the plate, the plate is not pulling the string".

Ss. = 19, (1-6y; 3-7y; 3-8y; 5-9y; 4-10y;2-11y)

Excerpts:

Chris (8,4): "... the Ws. are pulling the string, the string is pulling the plate, the plate is not pulling the string, it is just staying there, the elastic is not pulling the plate...."

Greg (9,4): ".... The string pulls the plate, the plate pulls the string only if we take off the washers, the plate is not pulling the string right now..."

Jenny (8,5): "The plate is not pulling the washers because it is not heavy enough as those washers..."

Kevin (11,6):".... the plate is sort of pulling the string, but not, the elastic is pulling the plate, so the string is getting pulled but it is not getting pulled as much as the washers pull the string..."

2.1.B. "The plate is trying to pull back but it doesn't have enough strength".

Ss. = 9, (4-12y; 3-13y; 2-14y)

Excerpts:

Rick (12,10): "....Both sides (the washers and the elastic) are pulling but the washers are a little bit stronger than the elastic...."

Stanley (14,7): ".... There are two things pulling the plate, the weight of the washers and the elastic, the plate is not really pulling the string, but the plate is pulling the elastic..."

Comments:

- If S did not understand the question, S was reminded about saying the washer was pulling, and was asked if anything else was pulling.

- Most of Ss. answered: the Ws. are pulling the string, the string is pulling the plate, the plate is stretching the elastic, the thumb tack is holding everything. They were asked directly: Is the plate pulling the string or the washers?, they said: "no".

- The Ss. who subscribe to 2.1.A range from 6 to 11 years of age, and the ones who subscribe to 2.1.B. range from 12 to 14, with respect to this aspect of the task (action and reaction); the Ss. are clearly divided in two groups. One group, in which children see the forces acting only in one direction, unidirectional approach, or they don't see the reciprocity of forces; and the other group, in which children see the forces acting in both directions but not with the same magnitude.

- Most of the Ss. understand that a force is transmitted from one object to another if they are joined by a string or something else, for example: The weight of the washers pulls the plate by means of the string.

b) Interview Question: What is the thumb tack doing?

T: 30

Typical Children's Belief:

2.1.C. "The thumb tack is holding the elastic band, it is not pulling".

Ss. 25, (2-6y; 4-7y; 3-8y; 4-9y; 4-10y; 3-11y; 2-12y; 1-13y; 2-14y)

Excerpts:

Ryan (7,6): "The tack is holding the elastic from moving, otherwise the plate and the string would fall".

Jenny (98, 7): "The thumb tack is not pulling the elastic, the Ws. are pulling the elastic"

Lauch (11,3): "The thumb tack is preventing the elastic to spring back, if it weren't there, everything would be on the ground.

2.1.D. "The thumb tack is probably pulling the elastic".

Ss. : 4, (2-12y; 2-13y)

Excerpts:

Rick (12,10): ".... the tack is holding the elastic..... it is also pulling. The tack is stronger than the elastic because it is driven into the wood".

Teresa (13,10): "the tack is probably pulling the elastic".

Comments:

- After analyzing the children's ideas for this aspect of the task, it seems to the experimenter that children think that objects have a sort of "capacity" for exerting forces. Then, in a pair of objects interacting with each other, the one with greater "capacity" for exerting forces pulls more. For example, the thumb tack, due to the fact that it is driven into the wood, is exerting a greater force upon the elastic than the elastic upon the tack.

- Language problem: what is the difference between holding and pulling? A problem for further research.

- Subjects, after saying the tack is holding the elastic, were asked directly: Is the tack pulling the elastic? Most of the Ss. said: "No".

- Two objects can pull one another only if both objects can move. If one of the objects cannot move, that is, it is fixed, it can only hold the other but cannot pull it.

Overall Comments About the Major Concept: Action and Reaction

- After analyzing the answers for questions (a) and (b), it is clear that nobody in this sample has grasped the action and reaction principle yet. The Ss. having the belief 2.1.A. are far from understanding it, since they still have the unidirectional approach of forces.

The Ss. having the belief 2.1.B. are closer to the principle, but they have an incomplete understanding when they say:
"the plate is trying to pull back but it doesn't have enough strength", for this they could mean: the plate can't pull the washers because it can't lift it. In any case, their beliefs were not emphatic in assuring the action of the plate upon the washers as it was when they said the washers are pulli-g the plate.

- More evidence for the conclusion presented above is shown when analyzing the answer for question (b), in which 24 out of 30 Ss. assured that the thumb tack was only "holding" the elastic band, it was not "pulling". On the other hand, most of these Ss. said that the elastic band was "pulling" the thumb tack.

3.0 CONCEPT OF EQUILIBRIUM

3.1 The effect of the weight of the washer once the plate has stopped moving in task 1. There are two interview questions respect to this aspect of the task:

a) Interview Question: What is the washer doing in this moment?

T = 31

Typical Children's Beliefs:

3.1.A "The weight of the washer pulls the string, which is pulling (or putting

pressure, or weighing down) the plate".

Ss.: 31, (2-6y; 4-7y; 3-8y; 5-9y; 4-10y 3-11y; 4-12y; 3-13y; 2-14y)

Excerpts:

Rashida (6,7): "... the washer is heavy and it is pulling the string down and stretching the elastic and the plate can move..."

Chris (8,4): /"the washer is putting pressure and this string gets tight, the washer made the plate move.."

Lauch (11,9): "the washer is weighing down this (the string)....it is making the elastic longer and.....moved down the plate".

Comments:

- Language problem: for children, words as pulling putting pressure, pressing down, weighing down, could mean the same thing. It is an interesting problem for further research

- This question is asked immediately after plate stopped moving (see protocol of Task 1), then, for all the Ss. was still obvious that the washer was pulling.

b) Interview Questions: Is the washer still pulling?

T: 26

Typical Children's beliefs:

3.1.A "The washer is not pulling (putting pressure, etc.) because the plate is not moving, the washer is holding the plate".

Ss.: 10, (3-7y; 2-9y; 2-11y; 2-12y; 1-13y)

Excerpts:

Ryan (7,6): "...the washer is not pulling because it only pulls when it moves down, after the plate stopped balancing, it is not pulling, the washer only pulls when we put it on...."

Dianne (8,11): "... washer pulled only when I just put it there, now it is already on there, it is just staying and not pulling...."

Joseph (12,8): "....the washer is tugging the string, it is not pulling"

3.1.C. "The washer is pulling right now and the plate is not moving".

Ss.: 16, (3-8y; 3-9yy; 3-10y; 1-11y; 2-12y; 2-13y; 2-14y).

Excerpts:

Tobby (9,3): ".... the washer is still putting pressure because the washer is still on...."

Jeremy (9,8): "....the washer is pulling, the plate doesn't move because it is all what the elastic can stretch...."

Comments:

- This is a challenging question to find out what is the difference between pulling and holding for the children.

- 10. Ss. answered that washer was pulling (putting pressure, pressing down, etc.) in question (a), changed their minds when they were asked directly about in question (b). It is clear that for these subjects, pulling implies movement. Let's see one case: Ryan (7,6) in question (a) answered: "the washer is pulling the string, the plate and the elastic....": and the answer for question (b) was: ".... the washer is not pulling because it only pulls when it moved down...."

- 16 Ss. out of 26 agreed that the washer was pulling when the plate was stationary.

- There is not a clear division to group the Ss. in stages with respect to this aspect of the task.

3.2. Identification of all forces acting upon the plate in equilibrium situation in Task 1.

Interview Question: Why did the plate stop where it did?
Note: This aspect of the task was not asked to all the subjects for not having a long interview with all the children.

T: 13

Typical Children's Beliefs:

3.2.A. "The plate stopped there because the washer is not heavy enough, another washer is necessary to move farther. (There was no mention of the action of the elastic band upon the plate)".

Ss. 6, (1-6y; 1-8y; 1-9y; 1-10y; 1-11y; 1-14y).

Excerpts:

Jenny (8,5): "The plate stopped there because this washer is not heavy enough.."

Heather (11,7): ".....because the washer doesn't have enough weight to make move farther..."

3.2.B. "The plate stopped there because the elastic band is pulling back" (2 Ss. said: the elastic is holding back the plate).

Ss. 6, (1-8y; 2-11y; 2-12y; 1-13y)

Excerpts:

Dough (8,0): "The plate stopped there because the washer is not heavy enough and also because the elastic band, when you put pressure here (on the hook), the elastic band stretches, if you put more pressure the plate can go farther".

Lauch (11,10): "....because the elastic band is stretching and preventing the plate to move farther, the washer stretches the elastic...."

Rick (12,10): ".... the plate is going to move that way (in the direction of the action of the weight) until certain point and the elastic is going to stop it".

3.2.C. "I don't know why the plate stopped moving..."
Ss. 1, (1-13y)

Comments:

- After analyzing this aspect of the task, it was realized that the concept of amount of forces acting upon the plate is an important one, since, half of the interviewees saw only the action of the washer. This aspect should have been investigated in all subjects.

- 7 out of 13 Ss. saw only the action of the weight of the washers upon the plate, they didn't mention at all the action of the elastic band upon the plate. In other parts of the task, some of the Ss. said the plate was pulling the elastic band, but here, it is clear that the elastic band was not pulling the plate. It was not clear how they thought that the plate was in equilibrium without the action of another equal force.

- 6 out of 13 Ss. affirmed that the plate stopped where it was, because the elastic band was pulling back, it was clear from their answers that both the elastic band and the washer were pulling with the same force.

- These beliefs can't be assigned to definite span of ages or stages.

3.3. The effect of forces with equal magnitude acting in opposite direction.

There are 3 interview questions respect to this subsidiary concept.

a) Interview Question: (Having already put 1 W at S's side in task 2): What could you do to keep the plate still right there (in the middle of the board)?

T : 31

Typical Children's Beliefs:

3.3.A. "Remove the washer in my side (I: We should keep it)....tape the plate.... I don't know how..."

Ss. 3, (2-7y; 1-10y)

Excerpts:

Jenny (10.4): "To keep the plate in the middle, you can tape or hold the string with your hand (I suggested to use washers).... put 1 W in your side".

3.3.B. "Put one washer in your side, then, we have one weight in each side".

Ss. 28, (2-6y; 2-7y; 3-8y; 5-9y; 4-10y; 3-11y; 4-12y 3-13y; 2-14y)

Excerpts:

Chantalle (6,6): "Put one washer there (I's side) because I have one here."

Corey (7,10): "Put one washer in your side... they are balancing across this (along the string)".

Dianne (8,11): "Keep it balanced, put another washer in your side".

Comments

- For 28 out of 31 Ss. it was clear that the plate would be stationary in the middle of the board if the same amount of washers were put in both sides. This shows that most of the Ss. have the concept of equilibrium in the case when forces in opposite direction can be applied and the object upon which the forces are being applied stays in the middle of the board. This belief was found in children ranging from 6 to 14 years of age.

b) Interview Question:

(Having already put 2 Ws. at S's side and 1 W. at I's side): What could you do to keep the plate still in the middle?

The 31 Ss. answered: "Put one more washer in your side".

Comments:

The 31 Ss. affirmed the necessity of having equal amount of washers on each side to keep the plate stationary in the middle of the board. Three Ss. who couldn't solve the task in the previous situation learned from the previous experimental result their answers.

c) Interview Question:

(3 forces acting upon the system, 2 of them acting in the same direction and opposite to the third one in task 3. Having already put 3 washers in each hook: 3 in each of the hooks, the two pulleys are touching each other and in opposite position to the third one, at I's side and 3 in the hook at S's side):
What is it going to happen if I pull out the peg?

What could you do to keep the ring still at the centre?

T: 31

Typical Children's Beliefs:

3.3.D. - "To keep the ring at the centre I have to put 3 more washers in my side, so I have 6 washers in each side".

Ss.: 25, (3-7y; 2-8y; 4-9y; 5-10y; 2-11y; 4-12y; 3-13y; 2-14y)

Excerpts:

Natalie (97,10): "To keep the ring in the middle, I put 3 more Ws. in my side".

Tobby (9,3) : "I can put 3 more Ws, in my hook, then, you have 6 altogether and I have 3 here".

3.3.E. - "the ring is going to stay at the centre because there are 3 washers in each hook".

Ss.: 3, (1-8y; 1-9y ; 1-11y)

Excerpts

Dough (8,0): "The plate won't move at all because we have the same amount of weight in each hook".

Heather (11,4): "To keep the ring in the middle, put 3 Ws. in your hooks, and I put 3 more washers in my hook, now, it's going to stay because there are the same number of washers in each hook.

3.3.F. - "I don't know how, maybe by putting 3 washers on the ring".

Ss: 3, (2-6y; 1-7y).

Excerpts:

Rashida (6,7): "To keep the ring in the middle, keep only one washer in each hook because it will be lighter, if it is heavier it will move".

Chantalle (6,6): "Put 3 more washers on the top of the ring or upon the string if you want to keep the ring in the middle".

Comments

- This could be considered as a cross-check question of Question 3.3.A. in task 2.

- This aspect of the task reinforces even more the idea that the object (ring) has to be in the centre to be in equilibrium. Other planned questions would be necessary to ask to find out if the Ss. who answered correctly, have the idea that the ring is only in equilibrium when it is at the centre.

- 25 out of 31 Ss. affirmed that the ring would stay at the centre if the same amount of washers were put in both sides, 3 and 3 at I's side, and 6 at S's side.

- When a force is divided in 2 components, both acting in the same direction, most of the Ss. were able to see that the resultant was simply the arithmetical addition of both, as a condition to keep the ring stationary at the centre.

3.4. - What forces are acting in on equilibrium situation in task 2.

There are two interview questions in this subsidiary concept.

a) Interview Question:

(Having already put 2 washers in each side in task 2): What are these washers doing in this moment?

T: 20

Typical Children's Beliefs

3.4.A. - "The washers are holding the plate in the middle" (I asked: What do you mean by that. Ss answered: Well, the washers keep the plate from going down".

Ss: 8, (1-7y: 2-8y: 1-9y; 3-10y; 1-11y).

Excerpts:

Lauch (11,10): "The washers keep the plate from going down".

Greg (9,8): "These washers (at S's side) are holding the plate, and these washers (at I's side) are holding the plate even, that is, the same".

3.4.B. - "Each pair of wahsers is pulling in opposite way (direction)".

Ss. 20, (1-6Y; 2-7y; 1-8y; 3-9y; 2-10y 2-11y; 4-12y; 3-13y; 2-14y).

Excerpts:

Natalie (7,10): "These washers (S's side) are pulling this way (towards the S) and these washers (I's side) are pulling that way (towards the I), they are pulling together (simultaneously), then, the plate stays".

Rick (12,10): "Both (pair of washers) want to reach the ground, but because both have the same amount of weight, they are pulling the same, then, the plate stays there".

Joseph (12, 10): " They are both tugging, but when they are tugging, they hold the plate".

Comments:

- 20 out of 28 Ss. affirmed that each pair of washers in each side were pulling the plate in opposite way (direction). This shows clearly that the Ss. saw two equal forces acting upon the plate in opposite direction, the effect of this was that the plate was stationary in the middle of the board.

- The other 8 Ss., which said that the washers were holding the plate in the middle, might also be included in the first category, but they were not so specific in their answers as the first group. The key word for this group remains in what they mean by holding.

b) Interview Question:

(I displaced the plate towards the S in about 6 cms. and hold it there): What will happen if I remove my finger from the plate?

T: 30

Typical Children's Beliefs:

3.4.C. - "Plate will stay still where it is now because there are still 2 washers in each side".

Ss: 14, (2-7y; 1-6y; 1-8y; 1-9y; 2-10y; 3-11y; 2-12y; 2-14y).

Excerpts:

Corey (7,10): "Plate will stay where it is because both sides balance, both sides have the same weight".

Vicky (10,4): "Plate will stay there because it is still the same weight in both sides".

3.4.D. - "Plate will go back to the middle because only over there, it is in equilibrium".

Ss: 12, (1-16y; 1-7y; 1-8y; 3-9y; 2-10y; 2-12y; 2-13y)

Excerpts:

Doug (8,0): "Plate will go back because you are pulling the plate and there is the same weight in both sides, the plate has to be right at the centre".

Tobby (9,3): "The plate is going to go back to where it was before because the washers have to be at the same level (same height): Now, there is more pressure in your side (washers are higher at I's side)".

Frank (10,4): "Plate is going to go back to the middle because the washers have to be even (same height?), your side will move down until both have the same height".

3.4.E. - "The plate will move towards me (towards the S.) because these Washers are closer to the ground".

Ss: 3, (1-8y; 1-9y; 1-13y).

Excerpts:

Dianne (8,11): "The plate will move towards me all the way because these washers (at S's side) are lower than your washers, my washers pull more because they are lower".

Betty (12,11): "The plate is going to move all the way because these washers (at S's side) are more down and they pull more".

Comments:

- 12 Ss. out of a total of 30 have the belief that the system is in equilibrium only when the plate is in the middle. Some of them in this group claimed that the washers in both sides have to be at the same level or height as condition of equilibrium.

- 14 out of 30 Ss. said that the plate will stay where it was held because there were still the same amount of washers in each side. For these Ss., the only condition to have the plate in equilibrium is to have the same amount of washers in each side no matter if the plate is in the middle or somewhere in between the two pulleys.

- 3 out of 30 Ss. insisted in that the plate would move towards them because the washers in their side were closer to the ground, then they were pulling more.

- These beliefs can't be assigned to a definite span of ages.

Overall Comments About the Major Concept of Equilibrium

- For these Ss., pulling and holding meant different things. It is important to mention here that in Task 1, one end of the plate was attached to a fixed object (the tack), while the other end was attached to the washers which were free to move. For some Ss. the free end could "pull", whereas the fixed end could "hold". But in Task 2, both ends are free and the plate can be "pulled" from both sides.
- The interview questions related to the concept of equilibrium in this task were clearly answered. For almost all the Ss. there was a clear necessity to have the same forces acting in opposite direction to have the plate in equilibrium, however, some Ss. saw as another condition of equilibrium that the plate be at the centre of the board or the washers be at the same height on each side.

4.0. CONCEPT OF THE EFFECT OF CHANGING THE CONFIGURATION OF WEIGHTS.

4.1. The effect of moving the set of 3 washers from the upper hook to the lowest hook in task 1.

Interview Question:

(The 3 Ws. were placed on the upper hook, there are 3 hooks tied to the string): What do you think is going to happen with the plate if you move all the washers from the upper hook to the lowest hook?

T: 30

Typical Children's Beliefs:

4.1.A. "The plate will move more because the washers are farther down or washers pull more when they are closer to the ground".

Ss: 15, (1-6y; 3-7y; 1-8y; 2-9y; 2-10y; 2-11y; 1-12y; 1-13y; 2-14y)

Excerpts:

Heather (7,0): "..... the plate will move more toward me because these washers are heavier when they are at the bottom...."

Lorelie (10,6): ".... plate will move more toward me because these washers are heavier down there...."

Stanley (14,7):".... plate will move farther because the washers are closer to the ground, then, they have more weight...."

4.1.B. "Plate will move backward because the washers are down more and there is not much weight pulling (washers closer to the ground weigh less)".

Ss: 5, (1-6y; 1-7y; 1-9y; 1-10y; 1-11y;

Excerpts:

Chantalle (6,7) ".... the plate is going to go backward because the washers used to be up on the top, they were higher; now, they are down there, then, it will move backward...."

Sandra (10,0): ".... the plate will move less because when washers are down there, they pull less..."

4.1.C. - "Plate will stay there because there are still the same amount of washers or weight".

Ss: 8, (1-8y; 1-9y; 1-10y; 1-11y; 2-12y; 2-13y)

Excerpts:

Chris (8,4): "the plate will move the same, the washers are going to be down there, but they have the same pressure".

Jenny (10,4): ".... plate will stay there because there is still the same amount of weight pulling it".

Two Special Cases:

Jenny (8,0): "It is going to pull more because these hooks are a little heavy..... if you put all the washers on the lowest hook, those two hooks (the hooks upon the lowest one) are going to pull now; because before when they were underneath of the washers, they were not pulling".

Frank (10,0): "Probably, the plate will move back a little because those washers do not have enough room to fall down".

Comments

- 15 out of 30 Ss. affirmed that the plate would move farther because when washers were closer to the ground, they weigh more, therefore, they pull more. These Ss. had more information about gravity and maybe they have heard that gravity increases when one is closer to the ground. Then, they could be applying this law, but what they don't know yet is that this change of gravity is noticeable only for much greater changes of height.

- 5 Ss. affirmed that the plate would move backward because when washers were closer to the ground, they weigh less, therefore, they pull less.

- 8 Ss. affirmed that the plate would stay at the same place because there was the same weight acting. These Ss. didn't see any change in the force exerted when the washers were removed.

- These beliefs can't be assigned to a specific span of ages.

4.2. The effect of putting one washer in each hook in task 1.

Interview Question:

What do you think is going to happen with the plate if you put one washer in each hook? (there are 3 washers and 3 hooks).

T: 30

Typical Children's Beliefs:

4.2 .A. - "The plate will move more because the washers pull more when they are separated".

Ss: 6, (1-6y; 2-7y; 1-9y; 2-13y)

Excerpts

Rashida (6,7): "The plate will move a little bit more because each hook has a washer that makes it more heavier than when all the washers are in only one hook and also there is one more down".

Greg (9,8): "The plate will move a little more forward because there is a little more weight now, when they are separated, each one pulls a little more".

Betty (13,11): "The plate is going to move farther because there is one washer in each hook".

4.2.B. - "The plate will move less because the washers are spread out and they pull less (as a whole they pull less)".

Ss: 3, (2-7y; 1-9y)

Ryan (7,6): "The plate will move backwards because there is less weight now, because the washers are separated now, it makes them lighter".

Dianne (8,11). "The plate will move a little less because washers are not together now".

4.2.C. - "The plate will stay where it is because there is still the same weight".

Ss: 15, (1-6y; 3-8y; 1-9y; 3-10y; 2-11y; 1-13y; 2-14y).

Excerpts:

Doug (8,0): "The plate is going to stay there because it is still the same weight".

Vicky (10,4): "The plate will stay there because there is the same weight, you didn't add or take off any".

4.2.D. - "The plate will stay there because before it didn't move when washers were moved from the top to the bottom".

Ss: 6, (1-9y; 2-10y; 1-11y; 2-12y)

Excerpts:

Jeremy (9,4): "The plate is not going to move more because it didn't move when the washers were down there, I thought it'd be stronger, so it won't move more".

Sandra (10,0): "The plate will stay there because it stayed when washers were on the top and on the bottom".

Rick (12,10): "The plate is going to stay the same on the basis that when the washers were together it stayed the same, when I moved them from the top to bottom, it didn't move".

Comments:

- 21 out of 30 Ss. had the belief that the plate would stay if the Ws. were spread out, even when 6 of them claimed that it'd stay because when Ws. were moved before it stayed.

- There is a strong possibility that children learned the answer for question 4.2 from the experimental result of question 4.1. Then, their "primitive" answers could have been different if question 4.1 were eliminated.

4.3. Cross-check Question:

The effect of putting one washer in each of the two hooks at S's side when the system is in equilibrium in task 2.

Interview Question:

If you put one washer in each hook in you side, what do you think is going to happen with the whole thing?

T: 25.

Typical Children's Beliefs:

4.3.A. - "The plate will stay where it is because there are still 2 washers in each hook".

Ss: 22, (1-6y; 1-7y; 3-8y; 4-9y; 3-10y; 3-11y; 3-12y; 2-13y; 2-14y)

Excerpts:

Rashida (6,7): "The plate will stay because there are still two washers in each side".

Tobby (9,3): "The plate is going to stay because it is still the same weight".

4.3.B. - "The plate will move towards me (towards the S) almost all the way because one washer is closer to the ground".

Ss: 3, (1-6y; 1-9y; 1-10y).

Excerpts:

Jeremy (9,4): "The plate will move towards me a bit because this washer is closer to the ground".

Comments:

- Since, this question is a cross-check question, if the answers for question 4.2 are recalled, where only 15 Ss. said that the plate would stay if the configuration were changed, now, in this question, 22 Ss. answered reaffirming that the plate would stay if the configuration were changed. Clearly, some Ss. have learned from task 1, the correct answers.

Overall Comments about the Major Concept: The Effect of Changing the Configuration of Weights:

- This aspect of the task, particularly 4.2 and 4.3, would have been more relevant to check the conservation of weight. Since, beside the force applied by the elastic band in task 1, all other forces in the 3 tasks were the weight of the washers. The effect of the change of the washers (weights) configuration upon the displacement of the plate was looked for. But these

displacements were the objective measurement of the force exerted, then, the change of configuration affects only the force exerted, which was the weight of the Ws.

- According to the above statement, 22 out of 26 Ss. are conservers of weight.

5.0. CONCEPT OF COMPOSITION OF TWO FORCES:

5.1 The effect of displacing the plate in a perpendicular direction to the original line of forces in task 2.

Interview Question:

(I displaces the plate in a perpendicular direction in about 8 cm. and holds it there): What will happen if the plate is released?

T: 30

Typical Children's Beliefs:

5.1.A. "The plate will go back to the middle (with no clear explanation) because it has to be there (Aristotelian idea)".

Ss: 27, (2-6y; 3-7y; 2-8y; 5-9y; 4-10y; 2-11y; 4-12y 3-13y; 2-14y)

Excerpts:

Ryan (7,6) "The plate will move to the middle because these strings are pulling on the way down to the middle, it is like a sling-shot".

Jenny (8,7): "The plate is going to move back because the strings have to be straight here in the middle".

Jenny (10,4): "The plate is going to go back because the strings are naturaly straight in the middle, you are forcing the plate to be there".

5.1.B - "The plate will stay up there".

Ss: 3, (1-8y; 1-10y; 1-11y).

Excerpts:

Heather (7,0): "The plate is going to stay up there because it stayed when you put it there (when it was displaced towards the S, see 3.4.B).

Comments:

- It was clear for 27 out of 30 Ss. that the system would return to the equilibrium position, to the middle of the board, if it were released. The prediction was that the object would move in the direction of the resultant force, which means that they were able to compose two forces.
  Some of them made an analogy with the sling-shot.

- The explanations for composing the two forces were a kind of Aristotelian explanations, such as the strings have to be straight in the middle, that is their natural position. No intents to include the components in their explanations was seen.

5.2. The composition of two forces (the resultant force will be balanced by a third force) with equal magnitude and forming the following angles: 90°, 120°, 180°, 240°, and 75°.

a) (Initially the angle between F_1 and F_2 is 90°, F_1 and F_2 have 3 washers, and R has 6 washers(Ws). The ring is held at the centre by the peg in this and in the following situations):

If I pull out the peg, what do you think is going to happen with the ring?

What could you do to keep the ring still at the centre (without moving the pulleys)?

T: 29. (Note: T, the total number of Ss. answering the respective question, is going to vary in task 3, several Ss. couldn't continue the task, it being difficult for them).

Typical Children's Beliefs:

(Note: All the children's beliefs with respect to all the questions in 5.2 and 5.3 are divided in three parts: (1) answer to the question: what happen with the ring(r) if the peg is removed, (2) how to keep the ring(r) at the centre, and (3) second intent to keep the r at the centre, if it's the case).

5.2.A. - "The ring will stay at the centre because there is the same weight in both sides...(ring moved).... I don't know how to keep the ring at the centre...."

Ss: 1, (1-6y).

Excerpts:

Chantalle (6,6): "If you want the ring at the centre, I have to remove all the washers in my side...."

5.2.B. - "The ring will stay at the centre because there is the same weight in both sides..... (r moved)..... I don't know what else to do...."

Ss: 4, (2-7y; 1-8y; 1-13y).

Excerpts:

Natalie (7,10): ".... to keep the ring at the centre I have to take 3 Ws. off from my side, then, we have the same amount in each hook...."

Tommy (13,14): "..... to keep the r at the centre I take off 3 Ws. from here, that way, we have 3 Ws. in each side (hook)....."

5.2.C. - "The ring will stay at the centre because there is the same weight on both sides....(r moved)..... to keep the ring, put the same amount of washers in each hook...(r moved)..... I put 4 Ws. in my side.. (r stayed)".

Ss: 8, (1-6y; 1-8y; 2-9y; 3-12y; 1-14y)

Excerpts:

Chris (8,4): ".....by putting 3 Ws. in each hook, ring moved toward you, then. I put 5 or 4 in my side....."

Sue (12,7): "..... I put one more W in my side because with 3 here it moved toward you...."

5.2.D. - "Ring will move toward me because those 6 (3 and 3 at I's side) are apart, they pull less when they are apart (r moved)..... to keep the ring at the centre, I have to put the same amount of washers in each hook..... (r moved)..... I don't know what else to do..."

Ss: 3, (2-9y; 1-10y)

Excerpts:

Frank (10,4): "..... To keep ring at the centre, leave 3 in those hooks (F_1 and F_2) and 5 Ws. here.... (r moved)..... I don't know what else to do ...."

5.2.E. - "Ring will move toward me because those 6 Ws. (3 and 3 at I's side) are far apart, they pull less now... (r moved).... to keep the ring at the centre, I have to put the same amount of Ws. in each hook ..... (r moved)..... because the ring moved towards you and I will put one more W in here (R = 4, r stayed)....."

Ss: 13, (1-8y; 1-9y; 4-10y; 3-11y; 1-12y; 2-13y; 1-14y)

Excerpts:

Lorelie (10,7): ".....with 3 Ws. in here, the ring moved toward you, if I put 5 or 4 here, it could stay...."

Lauch (11,10): "..... if I put 4 Ws. in here (R:4), the ring will stay, because before with 3, it moved toward you..."

Comments:

- Finally, 21 Ss. out of 29 were able to compose correctly the two forces when forming an angle of 90°.

- 13 Ss. predicted that the ring would stay providing that there was the same weight in both sides.

- 16 Ss. gave as explanation for the ring moving toward them because when F_1 and F_2 are apart they pull less. The first strategy of these Ss. to bring the system in equilibrium with the ring at the centre was the necessity of having the same number of washers in each hook. Even when these Ss. predicted the ring moving toward them, that is, they knew that R (6 Ws.) was pulling more than F_1 and F_2 (3 Ws. each), regardless of the angle formed by F_1 and F_2, they looked for the easiest answer, which was having same amount of Ws. in each hook, to bring the ring to the centre.

Comments:

- Only 13 Ss. from the 16 mentioned above (11 ranging from 10 to 14 years of age) were able to suggest a second strategy to bring the ring to the centre, by noticing that with R=6, the ring moved to the S, and by increasing F_1 and F_2 the ring moved toward the I, then, the alternative way could be by decreasing the number of washers in R (with R : 4 Ws. ring stayed at the centre).

- Nobody used as first strategy the decrease of number of washers in R. This means that all the Ss. learned the correct answer from the task. It also means that none of the Ss. had, as primitive idea, the notion of composition of forces.

b) (Initially, angle $(F_1, F_2) = 120^o$, $F_1 = F_2 = 3$ Ws., R = 4 Ws.):

If I pull out the peg, what do you think is going to happen with the ring?
What could you do to keep the ring still at the centre?

T: 21

Typical Children's Beliefs:

5.2.b.A. - "The ring will stay at the centre because there is no change in the amount of washers..... (r moved).... To keep the ring at the centre I take off 1 W in my side, then, there are 3 Ws. in each hook (no mention of the equal separation among the strings)".

Ss: 2, (1-8y; 1-11y)

Excerpts:

Chris (8,4): "..... if I take one washer off from my side the ring is going to stay because there is the same amount of Ws. in each end...."

5.2.b.B. - "The ring will move toward me because there is more weight in my side (r moved)..... To keep the ring at the centre, I take off one W from my side, so there are 3 Ws. in each hook (no mention of equal separation among the washers)".

Ss: 8, (2-9y; 2-10y; 1-11y; 2-12y; 1-14y).

Excerpts:

Greg (9,8): "..... every time you separate more then (F_1 and F_2), it seems there is less weight in your side.... if I take 1 W off from here, the ring is going to stay....."

Rick (12,10): "..... There are 4 Ws. here and 3 and 3 over there, then, the ring will move toward me..... if I take off 1 W from here, the ring will stay...."

5.2.b.C. - "The ring will move toward me because F_1 and F_2 are farther apart and R has more weight (than F_1 and F_2 individually?) ..... to keep the ring at the centre, I take 1 W off from my side, then, there are 3 Ws. in each hook (no mention of equal separation among the washers)".

Ss: 5, (1-8y; 1-9y; 1-10y; 1-11y; 1-13y).

Excerpts:

Doug (8,0): "..... Ring will move toward me because there are 4 Ws. here and those strings are apart.... to keep the ring at the centre, I take off 1 W from here because we need the same weight in each hook....."

Sandra (10,0): "The ring will move toward me because those washers (F_1 and F_2) are more separated now and my side has more things (washers); if those washers were in the middle, they would pull more but they are separated, then, I have to take 1 W off from my side to keep the ring at the centre".

5.2.b.D. - "Ring will move toward me because those (F_1 and F_2) are farther apart and this (R) has more weight than each one of those..... to keep the ring at the centre I have to take 1 W off from my side, we need the same number of Ws. in each hook because those (the strings) are the same distance apart".

Ss. 6, (1-9y; 2-12y; 2-13y; 1-14y)

Excerpts:

Jeremy (9,4): "This (R) has more weight than those (F_1 and F_2), when those are apart, they can't join their weight easily.....to keep the ring at the middle I remove 1 W from my hook, because all the strings are almost the same length apart".

Excerpts:

Sue (12,7): "It's going to pull this way (toward the S) because now, all sides are equal and my side has more weight.....to keep the ring at the centre, I take 1 W off".

Comments:

- 19 Ss. predicted the ring moving toward the S's side, offering as proof that F_1 and F_2 were farther apart and that R had more weight than F_1 and F_2 individually. These Ss. have learned from the previous experimental result that when F_1 and F_2 are apart they pull less.

- 15 Ss., as first strategy to keep the ring at the centre, suggested having the same amount of Ws. in each hook but without saying anything with respect to the equality of separation between the strings. Since, for this aspect of the task, the circular board is divided in 3 equal parts, this fact is not difficult to visualize.

- only 6 Ss. suggested having same amount of washers in each hook because the strings were same distance apart.

c) Interview Question:

(Initially, angle (F_1 and F_2) = 180°, $F1 = F_2$ R = 3 Ws.).

If I pull out the peg, what do you think is going to happen with the ring?
What could you do to keep the ring at the centre?

T: 21

Typical Children's Beliefs:

5.2.c.A. - "The ring will stay where it is because all hooks have the same weight (no mention of the angles), (r moved)..... to keep the ring at the centre, I take off 1 W here (r moved)..... I don't know what else to do...."

Ss: 1, (1,6)

5.2.c.B. - "The ring will stay because there is the same weight in each hook (no mention of the angles), (r moved).... to keep ring at the centre (first strategy): I add washers in those (In F_1 and F_2), (r moved).... (second strategy) it has to be equal weight in each hook...."

Ss: 2,(1-9y; 1-11y)

Excerpts:

David (9,8): "The ring is going to stay (r moved).... to keep it at the centre, add 1 W in each of those (in F_1 and F_2)...(r moved)....take 1 W off from here (r moved)....oh, leave 2 Ws. in each hook, then all are at the same level..."

5.2.c.C. - "The ring will stay because the same weight in each hook and same distance between F_1 and R, and F_2 and R (r moved).... to keep the ring at the centre, I take 1 W off from here (r moved).....take one more off..... take all Ws. off (R:0)...(r stayed)".

Ss: 8,(1-9y; 4-10y; 2-11y; 1-13y)

Excerpts:

Lorelie (10,7): "The ring will stay because there is the same weight in each side (each hook), (r moved).... take 1 W off from here .... take one more .... take the last one..."

Kevin (11, 7): " The plate is going to stay because all the washers are pulling in different angles and all are pulling with the same weight (r moved)... to keep the ring at the centre, I can take 1 W off from here (r moved)..... Oh, ... I can take all Ws. off from here...."

5.2.c.D. - "The ring will move toward me because there is more weight in my side and those (F_1 and F_2) are farther apart..... to keep the ring at the centre, I take 1 W off from here ..... I take 1 more off..... Take all Ws off...."

Ss: 6, (1-8y; 2-9y; 3-12y)

Excerpts:

Greg (9,8): "The ring will move down here because this (R) has more weight than each one of those and you moved them apart more, then they don't have much weight.....to keep the ring at the centre, I take 1 W off from here.... I take one more.... I take the last one...."

Excerpts:

(12,10): "The ring will move to here because everything is on this side now....To keep the ring at the middle, I take 1 W off from here. .....Oh, I remove all the Ws. from here...."

5.2.c.E. - "The ring will move toward me because there is no weight pulling this (R).... to keep the ring at the centre, I have to take all the Ws. off from this (R)."

Ss: 3, (1-12y; 2-14y)

Excerpts:

Sue (12,7): " It's going to pull down this way because there is no weight pulling from over there (facing R), then, to keep the ring at the centre, I have to take all the washers off from here (R)".

Stanley (14,7): "It's going to pull this way because that string (the ones joining F_1 and F_2) is almost straight, then, this one (R) is pulling to here, the ring is being pulled by this side.... to keep the ring in the middle, I have to take all the Ws. off from here...."

5.2.c.F. - "Ring will move toward me..... to keep the ring at the centre I have to add more Ws. in those F_1 and F_2)".

Ss: 1, (1-13y).

Comments:

- This aspect of the task should have been familar for the Ss. due to the similarity with task 2.

- 10 Ss. predicted that the ring would stay at the centre. This is an amazing result after having found in the previous aspect that 19 Ss. from the same group of 21 indicated that when F_1 and F_2 are separated they pull less.

- 10 Ss. predicted that the ring would move toward the S because F_1 and F_2 were farther apart and there was more weight at S's side.

- Only 3 Ss. suggested to increase the number of Ws. in F_1 and F_2 to keep the ring at the centre as first strategy.

Comments:

- 14 Ss. suggested taking some washers from R to keep the ring at the centre. Most of them were able to keep the ring at the centre by removing the washers from R one by one.

- Only 3 Ss. suggested immediately the necessity of taking all the washers from R to keep the ring at the centre.

d) Interview Question:

(Initially: angle (F_1, F_2) = 240°, F_1 = F_2 = 3 Ws. R = 0): If I pull out the peg, what do you think is going to happen to the ring?

T: 20

Typical Children's Beliefs:

5.2.d.A. - "The ring will stay because there is the same amount of washers in each hook".

Ss: 4, (1-8y; 2-10y; 1-13y)

Excerpts:

Chris (8,4): "It is going to stay because there is the same amount of Ws. in each hook".

Jenny (10,4): "The ring will stay where it is because there is nothing here (R:0) and only these two (F_1 and F_2) are pulling and are equal".

5.2.d.B. - "The ring will move until the strings are straight or it is going to move half-way".

Ss: 11, (3-9y; 1-11y; 4-12y; 2-14y)

Excerpts:

Jeremy (9,4): "The ring will move toward me just to the middle".

Allison (12,2): "The ring will move toward me, about half way because the strings have to be straight in here (half-way position)".

5.2.d.C. - "The ring will move all the way because all the washers are in my side and they are pulling".

Ss. 2, (1-10y; 1-11y)

Excerpts:

Lauch (11,10): "It is going to pull all the way because all these things (washers) are in this side of the board (S's side) and they are pulling this way (toward the S)".

Comments:

- This aspect of task 3 is identical to one of the aspect in task 2, showed in 5.1., in that aspect 27 out of 30 Ss. predicted correctly.

- 11 out of 17 Ss. predicted the ring would move until strings were straight and 2 Ss. said that the ring would move until strings were straight and 2 Ss. said that the ring would move all the way.

- 4 Ss. predicted the ring would stay at the centre because there was the same number of washers in each hook without considering the relative position of the washers.

5.2.e. - Interview Question

(Initially: angle (F_1 and F_2) = 75°, F_1 = F_2 = 3 washers, R = 4 Ws. If I pull out the peg, what do you think is going to happen with the ring?

What could you do to keep the ring at the centre?

T = 8

Typical Children's Beliefs

5.2.e.A. - "The ring will move toward me because my side has more weight (R:4) than those (F_1 and F_2) ...(r moved toward I)..... to keep the ring at the centre, I add 1 W in R..(r stayed)"

Ss: 2, (1-10y; 1-11y)

Excerpts:

Kevin (11,7): "The ring will move toward me because this side is overpowered there are 4 Ws here and only 3 and 3 there (r moved toward I).... to keep the ring at the centre, I have to put 2 more Ws. here (R:6)..... (r moved toward S)....Oh, I need only 5 Ws. here (R:5)"

5.2.e.B. - "The ring will move toward you because those

(F_1 and F_2) are closer, they have more weight altogether now.... to keep the ring at the centre, I put 1 W. here (R:5)"

Ss: 6, (1-11y; 3-12y; 2-14y).

Excerpts:

Lauch (11,10): "It is going to move toward you now because you moved those (F_1 and F_2) closer, then, now they have more weight altogether..... I put one more W here to keep the ring at the centre".

Joseph (12,10): "It is going to move toward you because they (F_1 and F_2) are closer together and they are more as a team now, while more separated they are they work less as a tem. Work as a team, I mean, they combine their weight; they don't combine their weight when they are more separated".

Stanley (14,7): "It's going to pull that way (toward the I) because those pulleys are closer now, the washers work together now, they (F_1 and F_2) both pull together now because they are closer, before when they were more separated, they were not working together ..... to keep the ring at the centre, I put 1 W here (R:5)".

Comments:

- Only 8 Ss. from the initial sample of 31 remained for the last 2 aspects of task 3. It was the experimenter's decision to end the interview with all the other subjects in the previous part of interview, due to two main factors: Ss. were tired, which made them start guessing answers to please the experimenter, and Ss. were actually lost with the tasks and were giving answers not related with the experiments at all (romancing answers, Piaget).

- After increasing the angle from 0° to 240°, the angle is decreased again to 75°. Six of the 8 Ss. predicted that the ring would move toward the experimenter because F_1 and F_2 were closer what makes them pull more. These Ss. might have been using knowledge acquired during the interview.

- The ages of the 8 Ss. ranged from 10 to 14 years.

Overall Comments about the Concept of Composition of Two Forces with Equal Magnitude

- As it was said in the comments for 5.2.a., the beliefs that the children showed in the answer when the angle formed by F_1 and F_2 was changed for first time, were their primitive beliefs; since, after seeing the experimental result in 5.2.a., they have learned from the experiment and they are going to use this result in the following cases of varying more the angle. Even when, each S had the chance to use the experimental results when F_1 and F_2 formed an angle of 90° and to realize what happens when the variable angle was changed. The predictions for the other angles (120°, 180°, 240°, 75°) showed that most of Ss. did not make use of the first experimental result (90°) when trying to predict. This shows that some Ss. have not had yet the necessary experiences to consider the decisive factors when solving these kinds of problems.
- Some of the Ss. didn't have a common strategy to solve the different problems of the task, they were changing their ideas in each aspect. For most of them the variable angle was not important and they kept considering only the variable amount of washers, when trying to solve the problems.

5.3. The composition of two forces (the resultant will be balanced by a third force) with different magnitude and forming an angle of 75°.

Interview Question:

(Initially: angle (F_1 and F_2) = 75°, F_1 = 4 Ws., F_2 = 3 Ws. and R = 5 Ws): If I pull out the peg, what do you think is going to happen to the ring?

What could you do to keep the ring at the centre?

T: 8

Typical Children's Beliefs:

5.3.A. - "The ring will move toward you in that direction (along F_1 's string)...(r moved in between F_1's string and the central line drawn on the board)....to keep the ring at the centre, I add 1 W. here (R: 6)....(r moved closer to the centre).... I don't know what else to do...."

Ss: 1, (1-10y).

Excerpts:

Sandra (10,0): "The ring will move toward you (I ask: In what direction?).... along that string (F_1 string)....to keep the ring at the centre, I have to add 1 W here (R:6)....(r moved)....I don't know what else to do....."

5.3.B. - "Ring will move towards you (I: what direction?) .....in that direction (in between the F_1's string and the central line drawn on the board)....to keep the ring at the centre, I add 1 W. in here (R:6)..... (r stayed closer to the centre).

Ss:1,(1-12y)

Excerpts:

Sue (12,7): "The ring will move that way (towards the I), not along the F_1's string, more to the left (in between F_1's and the central line), not all the way, about that much (1/3 of total way)..... to keep the ring at the centre. I can't do anything, maybe, I can put 1 W in this side (R:6) .....(r stayed closer to the centre).....I don't know what else to do....."

5.3.C.: "The ring will move towards you in that direction (along F_1's string)....to keep the ring at the centre. I add 1 W in here (R:6).....(r moved closer to the centre).....I move this pulley to the right or to the left...(r was very close to the centre)"

Ss: 4, (2-11y; 1-12y; 1-14y)

Excerpts:

Lauch (11,10): "The ring will move towards you along the string about that far (1/3 of total way).... to keep it at the centre, I can put 1 W here (R:6)...(r stayed closer to the centre)..... you cut 1 W. in half.... Oh, I can move this pulley to here (to the right, r was farther from the centre now)..... or to here (to the left, r was closer to the centre)".

Willion (14,11): "The ring will move that way (towards the I) along that line (F_1's string)..... to keep it at the centre I can move this thing (the pulley) .....I can also increase the weight here (R:6)....(r stayed very close to the centre).

5.2.D. - "The ring will move toward you in that direction (in between F_1's string and the central line)..... to keep the ring at the centre I add 1 W. in here (R = 6)..... I move the pulley to the right or to the left...."

Ss: 2, (1-12y; 1-14y)

Excerpts:

Joseph (12,10): "The ring will move that way (towards the I, in between F_1 string and the central line)..... to keep the ring at the middle, I can add one more weight here (R=6).... I could add ½ weight more..... Oh, I can move this (pulley) to the left a bit..... (r stayed at the centre)".

Stanley (14,7): "It's going to pull towards the I), in that direction (in between the F_1 string and the central line)..... to keep the ring at the centre, I can put 1 W. here (R = 6, r stayed closer to the centre)..... I can change the angle, I can move the pulley towards there (to the S's left)....(r stayed at the centre)....."

Comments:

- 5 out of 8 Ss. predicted that the ring would move toward the I in the direction given by the string tied to F_1 (4 Ws.) since F_1 was greater than F_2.

Comments:

- The other 3 Ss. predicted that the ring would move towards the I in a direction in between the string attached to F_1 and the central line drawn on the board, which shows that these Ss. understand better the action of two forces working together. The other 5 Ss. mentioned above, considered only the effect of the greater force and they didn't consider at all the effect of F_2.

- The 8 Ss. suggested the addition of 1 W on R to keep the ring at the centre, showing clearly the they understand the concept of êquilibrium.

- 6 of the 8 Ss., besides the addition of 1 W. on R suggested the necessity of moving the pulley at S's side to bring the ring to the centre, after displacing this pulley a bit to the right and to the left, they had success in keeping the ring very close to the centre.

- Only these 6 Ss. out of 31 demonstrated an ability to work with two variables simultaneously (weight and angle), which would mean that they would be ready to be taught the composition of forces.

4.50 BROAD PATTERNS OF BELIEFS

There appears to be considerable consensus that children acquire many of their beliefs by means of a series of abstractions from experience with physical phenomena. (For example see the writings of Piaget, Bruner and Bohm). Given this perspective, one way of looking at different beliefs expressed by children in an interview setting is to examine them in terms of their degree of abstraction from the actual concrete situation. These abstractions occur at different levels, according to Bohm, ranging from very primitive "immediate perception" to higher levels of abstraction. Subjects operating at the lower level tend to explain a problem situation in terms of one or more isolated variables. These explanations are generally based upon direct sense impressions. In higher levels they account for the situation in terms of interacting variables due to abstractions formed from previous experiences.

The final stage of analysis then consists of categorizing the children's beliefs into three different levels of abstraction. The first level of abstraction contains those beliefs that are closest to a direct reporting of the child's observation. Beliefs that are immediate perceptions of the experimental situations. At this level the child simply describes the observed

result in their own words; there is no attempt to look for relationships among the variables in the situation.

The second level of abstraction contains more sophisticated beliefs. The child now begins to formulate some ideas about possible relationships to account for the observations made in the experimental setting. More factors involve in their explanations are now present but some important variables which are relevant for a complete comprehension of the situation are still left out.

The third level of abstraction contains those beliefs that account for the invariant features in the experiments. The individual brings to light the basic operations, movements and changes, within which certain characteristics have been found to be invariant, resulting in a "total picture" of the situation*. At this level, the subjects are able to account for the situation by considering the relationships among the variables.

---

* a clear example of invariant characteristic is that of Newtonian mechanics which consisted of the discovery of the invariance of certain relationships (Newton's law of motion), in wide variety of systems, movements, changes of frames of reference, etc.

While analyzing the children's beliefs and later when categorizing these beliefs in the level of abstraction, it was realized that it is not possible to match explicitly these beliefs or the levels with a given set of ages. That is, it is not possible to establish that the first level corresponds to a determined interval of ages; the same is true for the other two levels of abstraction. Subjects with different ages (from 6 to 14 years old) were found having beliefs in each of the three levels.

From the data collected, it might be said, but only in general terms, that the higher levels correspond to the older children in the sample but not to a specific range of ages.

4.60 THE THREE LEVELS OF ABSTRACTION OF CHILDREN'S BELIEFS ABOUT THE CONCEPT OF FORCE

The beliefs contained in each level of abstraction are ordered according to the order of the major concepts established in the conceptual profile (see page 46 of this Chapter 4).

4.61 First Level of Abstraction

A. Action of a Force:

A force is acting upon an object only if the object is moving, once the object stops moving, the force has ceased acting.

[See results of Conceptual Profile, part 3.1, question b (hereafter abbreviated as: C.P: 3.1;b). Belief held by subjects from 6 to 13 years (hereafter abbreviated as: Ss: (6-13)y].

B. A fixed body (a nail driven into the wood, a wall, a tree) cannot pull. It can only hold other objects.

(C.P. : 2.1;b, Ss: (6-14)y)

C. The action of a force implies pulling, therefore, motion. Holding does not imply the action of any force.

(C.P. : 2.1;b, Ss: (6-14)y)

Action and Reaction:

When two objects are interacting by means of a string, only one object is exerting a force on the other, without reciprocity of action.

(C.P. : 2.1;a. Ss: (6-11)y)

Concept of Equilibrium:

An object is in equilibrium if it is being pulled by another object and held by a third object.

(C.P. : 2.1;b C.P. : 3.1;b . Ss: (6-14)y)

Configuration of Weights (Conservation of Weight):

A. Objects closer to the ground pull less because they have less weight.

(C.P. : 4.1 . Ss: (6-11)y)

B. Weight of a set of objects pulls less or more when they are separated than when they are together.

(C.P. : 4.2 . Ss: (6-13)y)

Composition of Forces:

The resultant of two forces with equal magnitude and forming an angle different from zero degree is

obtained by adding their magnitudes arithmetically. The angle formed by the two components is not considered.

(C.P. : 5.2;a. Ss: (6-14)y)

4.62 Second level of Abstraction

Action of Forces:

When two forces are acting upon an object, it moves in the direction of the net force until the motion compensates for the net force, bringing the object to rest.

(C.P.: 1.3 . Ss: (6-13)y)

Action and Reaction:

When two objects are interacting by means of a string with the first object pulling a second object, this second object is trying to pull the first but it does not have enough strength -- bidirectional approach with forces acting reciprocally but with different magnitude.

(C.P. : 2.1; (2.1B) . Ss: (12-14)y)

Concept of Equilibrium:

Two equal forces keep an object in static equilibrium only if the object is just in the middle position in between the bodies which apply the forces.

(C.P.: 3.4;b . Ss: (6-13)y)

Configuration of Weights:

A. Objects closer to the ground can pull the same as objects in higher position because weight of an object is independent of its height.

(C.P.: 4.1 . Ss. (8-13)y).

B. A set of objects pulls the same when they are separated or together.

(C.P. : 4.2; (4.2c) . Ss: (6-14)y)

Composition of Forces:

The resultant of two forces with equal magnitude and forming angles greater than zero degree is obtained by considering magnitude and separation of the components. When the separation of the components is greater, the combination of them pull less and less.

(C.P. : 5.2; a,b,c. Ss: (8-14)y)

4.63 Third Level of Abstraction

Action of Forces:

When two forces are acting upon an object, it moves while there is a net force acting.

(C.P. : 1.3C) . Ss: (8-14)y)

Action and Reaction:

Whenever one body exercises a force upon a second body, the second body always exerts upon the first a force opposite in direction and equal in magnitude.

(Nobody in the sample held this concept. It can be claimed that this concept is not grasped naturally but it has to be taught).

Concept of Equilibrium:

Two equal forces keep an object in static equilibrium regardless of the position of the object

in between the bodies exerting the forces.

(C.P. : 3.4;b . Ss: (6-14)y)

Composition of Forces:

The resultant of two forces with different magnitude and forming an angle different from zero degrees is closer to the component with greater magnitude.

(C.P. : 5.3 Ss: (14)y).

CHAPTER FIVE

5.00 CONCLUSIONS, EDUCATIONAL IMPLICATIONS AND RECOMMENDATIONS

5.10 Summary of the Study

The two main objectives of this study were: (a) to explore what ideas or beliefs children have about the concept of force, and (b) to look for trends or patterns in the development of the concept of force in children ranging from 6 to 14 years of age. The procedures used to explore the children's beliefs consisted of individual interviews with 32 children.

The analysis of the interview data was done in two steps. First, a conceptual profile was constructed which contained several aspects of the concept of force as exemplified by the three interview tasks. The children's beliefs presented as answers to the questions asked during the interviews were keyed to the major subsidiary concepts in the conceptual profile. A second step consisted of examining the children's beliefs in terms of three levels of abstraction. It was suggested that these three levels might represent a set of broad developmental patterns in children's understanding of the concept of force.

5.20 Conclusions of the Study

Although the problems addressed in this study were not presented in form of hypotheses, tentative conclusions

can be offered about the methods used in the study and the ideas that children held about the particulate concepts of force presented in the interview setting.

First, the conclusions about the tasks, method of collecting data, and the method of analysis are presented.

1) The interview methodology (a modification of the Piagetian clinical interview) was a useful technique for collecting data about children's beliefs.

Through an interview approach a rich supply of children's beliefs was obtained. This same type of data was not possible to obtain from more standardized paper and pencil techniques.

2) The three tasks of the study can be considered valid for the purpose of collecting reliable data concerning children's ideas about force.

This conclusion seems justified since the children seemed to be genuinely involved with the problems arising from each of the tasks. The ideas presented by the children were reasonable and consistent throughout the three tasks. None of the children ever appeared to be bored or totally confused when proposing some idea or explanation to account for their observations.

3) A conceptual profile, which includes aspects of the concept of force illustrated by the three tasks, proved to be an acceptable method to analyze the interview data.

The categorization of children's ideas into a series of major and subsidiary concepts allowed the data to be analyzed in a very orderly way. It proved to be an efficient and fruitful method for converting the large amount of data into a form which has potential uses for teachers and curriculum developers.

A number of conclusions can also be reached regarding the substantive beliefs identified from the interview data.

4) All children in the sample, from 6 to 14 years of age, possessed some a priori ideas about the concept of force.

This assumption was made by the author before proceeding with the research. It appeared to be verified during the interviews since all subjects provided some ideas to account for their observations; although their ideas varied greatly from subject to subject.

5) From the data collected, it was concluded that certain ideas about force were found in children of all ages included in the study. A few other ideas seemed to be more age dependent.

It was found out that similar beliefs on the same major concepts were held by children ranging from 6 to 14 years of age. It was common to find the same belief

throughout the sample. For example, the belief that a force is acting upon an object only if the object is moving was held by subjects from 6 to 13 years of age. On the other hand, the concept of action and reaction seems to be age dependent (see task 1, question 9) since younger children (6 to 11 years of age) felt that only one object was pulling in their observations when two objects were interacting. And older children (12 to 14) affirmed that the two objects were pulling, even when one of the objects was pulling stronger than the other.

The following conclusion is related to objective (b) of the study.

6) Three different patterns of beliefs were hypothesized from the interview data. These patterns were interpreted in terms of different levels of abstraction.

This stage of analysis was done by taking the interview data as a whole and categorizing the parts of it (the set of beliefs), in such a way that each category contains similar kinds of explanations about the major concepts. Three categories or levels were defined for each major concept of the conceptual profile.

In examining the kinds of ideas in each of these levels it may be possible to obtain some insight into

the way children develop an understanding about the concept of force. However, it is not being claimed in the present study that all children follow the same order of development; this type of claim would require a much more careful and controlled study. These levels may indicate one possible mode of development.

Finally, the author considers it important to include in the conclusion section some of the more prominent ideas about the concept of force held by children throughout the sample.

7) Following are a series of substantive ideas expressed by the subjects about the concept of force.

- Subjects from 6 to 11 years of age held the belief that only one body exerts a force in a situation where there are two bodies interacting. Subjects from 12 to 14 years typically felt that when two bodies are interacting, one was exerting a force while the other was trying to exert a force but did not have enough strength.

- No subjects in the sample used the word force in describing any of the observations they made.

- All subjects were aware that the weight of the washers were responsible for exerting the pull in the three tasks.

- Most of the subjects felt that fixed bodies cannot exert a pull. They can only hold other bodies.

- All subjects in the study seemed to have an intuitive grasp of the concept of equilibrium in a situation where two equal forces were acting in opposite directions. Although, many subjects expressed the notion that an object is in equilibrium only when it is in the middle position between the bodies that exert the two opposite equal forces.

- Approximately half of the subjects were aware that two equal forces forming an angle greater than zero degrees do not add arithmetically. There was little indication that the subjects had any firm notion of the vectorial nature of force when attempting to account for the observed results.

5.30 Educational Implications

In the section on "The Educational Context of the Study" in Chapter Two, it was emphasized that children's ideas should be considered by those developing science curriculum and also by science teachers in their daily task of teaching science concepts to students.

This study has found that the understanding that children develop about the concept of force consists of a number of different ideas and explanations (some researchers have referred to them as misconceptions). The broad aim of most of the science curriculum projects developed in the last decades, seems to be directed toward helping the child to perceive natural phenomena in a more meaningful manner. However, results from this study might suggest that some of the concepts in the curriculum are not related to or built upon the abstractions that the child has made in their many informal encounters with natural phenomena. That is, present curricula are not built upon nor do they consider children's conceptions. Instead, the children are

expected to spend most of their time accommodating to the concepts[1] that have no meaning in terms of their experience. It may be unrealistic to expect that a child can grasp rather abstract scientific concepts after a brief exposure to them in one or two experiments, plus some explanation in a textbook.

The author feels that the first step to help the children to improve their understanding of certain science concepts is to explore how they think about situations involving those concepts. This study was focussed in that direction and the claim being made is that the children's conceptions of force revealed could be very useful to consider in the development of new curriculum material. For example, in task three F_1 and F_2 formed an angle of 90°, the conception of most children was that the ring would stay at the centre. This conception was based on the belief that the separation of F_1 and F_2 would not affect the previous situation of equilibrium when F_1 and F_2 were together. Curriculum developers and teachers must consider these "misconceptions" and use them to plan teaching strategies directed at a more comprehensive view of forces. If this is not done, there exists the risk that children will be always looking to the authority of the teacher to provide "correct" explanations even though they make a little intuitive sense to the student. They

will learn that scientific questions are to be answered only by the right answers that appear in the books, or advanced by the teacher and not by their own thinking. In short, they will be discouraged from attempting to think about problems on their own.

Based on the ideas developed above, the suggestion is that curricula should not be built exclusively upon preconceived objectives, which are based on traditional scientific paradigms. Rather, the curriculum should also include considerations of those ideas and ways of thinking which children develop as a result of considerable informal experience as they are growing up.

However, it should be mentioned that there are some practical problems that can arise with the implementation of this child-centered approach. In particular, the teacher becomes a very important factor to consider. Relevant questions are: How can the teacher be helped to become sensitive to the children's ideas and natural thought processes and thus respond to them in an appropriate manner? Do the teachers have to determine the children's beliefs for each class? Do the teachers have to create teaching strategies for each situation?

First of all, teachers would not have to be experts in exploring children's beliefs. They should, however, be aware that this knowledge exists and they must feel comfortable with using the information in

their classes. Rather, it is the curriculum developers who would consider children's beliefs when planning new curricula and they could provide examples of potential instructional sequences based upon this information.

Thus, by making the teachers sensitive to children's thought processes and by enabling them to recognize ideas which children hold which may be interfering with the formal lessons they are presenting, it is being claimed that the teaching and learning of some science concepts can be greatly improved.

5.40 Recommendations for Further Research

The overall implications of this study could be greatly enhanced by a number of follow-up studies.

These recommended studies are:

1) Expand the tasks used in the study to cover other aspects of the concept of force. Since the present study was limited to those aspects of the concept of force (action of a force, action and reaction, concept of equilibrium, configuration of weights, and composition of forces) depicted by the three tasks, it would be worthwhile to study other characteristics of forces, such as the directional aspect of a force, the concept of net force, and the force function applied by an elastic band.

2) Plan more controlled experimental investigations by taking as hypotheses some findings of the study. Other variables that could affect the development of concepts might be also included in these further investigations. Variables such as sex, socio-economic and cultural background of the subjects, which have been reported by other authors (Kamara, 1971) to influence the development of children's beliefs. These experimental studies would require that the size and characteristics of the sample must be carefully planned using precise statistical techniques.

3) Develop a method of analysis which would match individual subjects with particular levels of abstraction. Since, the levels of abstraction were categorized considering the composite beliefs expressed by all subjects it would be worthwhile to see if it is possible to categorize individuals according to a particular level. If this were possible then special teaching strategies could be prepared for individuals at a given level.

4) Study the language used by the subjects when explaining their beliefs about the concept of force. It would be interesting and useful to find out what they actually meant by pulling, holding, putting pressure, and other terms. Furthermore it may help to understand better how these beliefs have developed from their previous experiences.

5) Develop group instruments (for example, paper and pencil questionnaire) based on the beliefs obtained in this study to investigate the prevalence of these beliefs in a class setting.

6) Develop a series of teaching strategies based on the results of this study. These strategies could be cross-referenced to the paper and pencil instrument suggested in recommendation (5).

7) Carry out research studies to explore children's beliefs about other scientific concepts, such as momentum and energy. These studies could follow the same methodology used in this study.

NOTES

1. Concepts that summarize the result of many and many experiments performed by scientists, and that accounts for the invariant features of all these experiments.

BIBLIOGRAPHY

Albert, E. The Development of the Concept of Heat in Children. Unpublished Ph.D. dissertation, University of Illinois, 1974.

Ausubel, D.P., and Robinson, F.G. School Learning: An Introduction to Educational Psychology. New York: Holt, Rinehart and Winston Inc., 1969.

Bohm, D. The Special Theory of Relativity. Appendix: Physics and Perception. New York: W.A. Benjamin, 1965.

Broudy, H. "Can Research Provide a Rationale for the Study of Science?" Journal of Research in Science Teaching, 1973, 10, 227-233.

Broudy, H. "Criteria for the Professional Preparation of Teachers". Journal of Research in Science Teaching. 1965, 16, 408-415.

Broudy, H., Smith, B., and Burnett, J. Democracy and Excellence in American Secondary Education. Chicago: Rand McNalley, 1964.

Bruner, J.S. "The Course of Cognitive Growth". American Psychologist, 1964, 19, 1-15.

Chiappetta, E.L. A perspective on Formal Thought Development. Paper presented at the Annual Meeting of the National Association for Research in Science Teaching, 48th, Los Angeles, California, March 1975.

Driver, R. The Representation of Causal Frameworks in Young Adolescent Science Students. Unpublished Ph.D. dissertation, University of Illinois, 1973.

Elkind, D. "Piaget and Science Education". Science and Children. Nov. 1972.

Ellis, S.D., "Enrollment Trends". Physics Today. March 1967.

Erickson, G. An Analysis of Children's Ideas of Heat Phenomena. Unpublished Ed. D. thesis, The University of British Columbia, Vancouver, British Columbia, 1975.

Golshan, M.A. Detailed Analysis of a Child's Conception of Physical Phenomena. Unpublished Ph.D. dissertation, University of Illinois, 1972.

Hobbs, E.D. Patterns of Student's Beliefs -- Implications for Science Teaching". Paper presented at the Annual Meeting of the C.S.S.E. Fredericton, New Brunswick, June 1977.

Howe, A. "Formal Operational Thought and the High School Science Curriculum . Paper presented at the Annual Meeting of the National Association for Research in Science Teaching", 47th, Chicago, Illinois, April 1974.

Kamara, A.I. Cognitive Development among School Age Theme of Sierra Leone. Unpublished Ph.D. thesis, University of Illinois, 1971.

Karplus, E.F., and Karplus, R. "Intellectual Development Beyond Elementary School I: Deductive Logic". School Science and Mathematics. 1970, 70, 398-406.

Knifong, J. The Representation of Cognitive Structures of Four and a Half Year Old Children. Unpublished Ph.D. dissertation, University of Illinois, 1971.

Kohlberg, L., and Mayer, R., "Development as the Aim of Education". Harvard Education Review. 1972, 42, 449-496.

Lawson, A.E., and Renner, J.W. "Relationship of Science Subject Matter and Developmental Levels of Learners". Journal of Research in Science Teaching. 1975, 12 347-358.

Lawson, A.E., and Renner, J.W. "Relationship of science Subject Matter and Developmental Levels of Learning". Journal of Research in Science Teaching. 1975, 12, 347-358.

Lawson, A.E., and Wollman, W.T. "Encouraging the Transition from Concrete to Formal Cognitive Functioning -- An Experiment". Journal of Research in Science Teaching. 1976, 13, 413-430.

McClelland, J.A.G. "An Approach to the Development and Assessment of Instruction in Science at Second Grade Level: The Concept of Energy". Unpublished Ph.D. thesis, Cornell University, Ithaca, N.Y.

Millikan, R.A., "Present Tendencies in the Teaching of Elementary Physics". School Science and Math. 1908, 8, 347-359.

Novak, J.D. "An Alternative to Piagetian Psychology for Science and Mathematics Education". Science Education. 1977, 61, 453-477.

Piaget, J. The Child's Conception of Physical Causality. Totowa, N.J.: Littlefield, Adams and Co., 1960.

Piaget, J. Learning and Development. In V. Rockcastle and R. Ripple (Eds.), Piaget Rediscovered. A report of a Conference on Cognitive Studies and Curriculum Development, Cornell University, March, 1964.

Piaget, J. The Child's Conception of the World. Totowa, N.J.: Littlefield, Adams and Co., 1969.

Piaget, J. Piaget's Theory. In P. Mussen (Ed.). Carmichael's Manual of Child Development. New York: John Wiley and Sons, 1970.

Piaget, J., "Physical World of the Child". Physics Today: June 1972.

Piaget, J. La Composition Des Forces et le problem des vecteurs. Etudes d' épistémologie génétique. (Vol.XXX) Paris: Presses Universitaires de France, 1973.

Piaget, J. La formation de la notion de force. Etudes d' épistemologie génétique. (Vol.XXX) Paris: Presses Universitaires de France, 1973.

Pines, A.L. Scientific Concept Learning in Children: The Effect of Prior Knowledge on Resulting Cognitive Structure Subsequent to A-T Instruction. Unpublished Ph.D. thesis, Cornell University, N.Y.

Power, C.N., "Competing Paradigms in Science Education Research". Journal of Research in Science Teaching. 1976, 13, 579-587.

Preece, P.F.W. "Mapping cognitive structure: a comparison of methods". Journal of Educational Psychology, 1976, 68 (1), 1-8.

PSSC Physics Course. Toronto: The Copp Clark Publishing Co. Ltd., 1960.

Raven, Ronald. "The Development of the Concept of Momentum in Primary School Children". Journal of Research in Science Teaching. 1967, 5, 216-223.

"Report of the Commission on the Reorganization of Science in Secondary Schools". V.S. Bureau of Education Bulletins. 1920, 26, 16.

Sayre, S., and Ball, D.W. "Piagetian Cognitive Development and Achievement in Sciences". Journal of Research in Science Teaching, 1975, 12, 165-174.

"Science", The Encyclopedia of Educational Research, 1960, p. 1217.

Shavelson, R.J. "Methods for examining representations of a subject matter structure in a student's memory". Journal of Research in Science Teaching, 1974, 11 (3), 231-249.

The Project Physics Course - Handbook, New York: Holt, Rinehart, and Winston, Inc., 1970.

Welch, W.W. "High School Physics Enrollments", Physics Today. 1967, 20, 9-13.

Welch, W.W. "Some Characteristics of High School Physics Students: Circa 1968". Journal of Research in Science Teaching. 1969, 6, 242-247.

Welch, W.W., and Rothman, A.I. "The Success of Recruited Students in a New Physics Course". Science Education. 1968, 52, 270-273.

Welch, W.W., Walberg, H.J., and Watson, F.G. "A Case Study in Curriculum Evaluation: Harvard Project Physics". Unpublished mimeograph, University of Minnesota, Minneapolis, 1971.

APPENDIX

TRANSCRIPT OF AN INTERVIEW

Kevin's Interview (11, 7)

(The first few minutes were spent making him comfortable, chatting about his science class and parents, answering questions about the videotape camera, and setting the materials for task one).

I: Interviewer, S: Subject, W: Washer(s)

I: This is a kind of game or experiment if you want. We have a string with 3 hooks, a pulley, a plastic plate, an elastic band and the thumb tack. Could you describe to me what is going to happen if you put one washer(W) here in this hook (the top hook).

S: *It (the washer) is going to pull the plate in about 3 cm., just only because there is only one weight.*

I: You are talking about weight. What is the difference between a weight and a washer?

S: *Well, the washer is a sort of weight because it has weight. If you put a weight on the string it pulls the string and if you put a washer it still pulls the string..*

I: O.K. What else is going to happen? I mean with the string, the elastic band.

S: *Well, the string is coming here, the plate is going to come here and the elastic is going to stretch.*

I: O.K. Do it, please.
(The Interviewer held the plate while the Subject put on the washer, and then he released it).
It moved, not too much but it moved. I am going to make a mark where the plate is now. Kevin, could you tell me what is this washer doing here at this moment?

S: *Well, you told me putting it on -*

I: Yes, but what is it doing now with the whole thing?

S: *It's holding the elastic from pulling the plate back .... It's holding the plate back from pulling the elastic.... from making the elastic come back again.*

I: Yeh.....It's holding the plate here and what is the elastic band doing?

S: *It's trying to pull back -*

I: Why did not the plate move farther? Why did it move only to here? (I showed the mark).

S: *Because the weight pulls the string down or the washer pulls the string down and here there is the pulley which goes around .....*

I: The question is why the plate didn't move farther.

S: *Oh, it didn't move forward more because the elastic is holding it.*

I: Is the washer pulling right now?

S: *Yeh, it's pulling -*

I: What do you think is going to happen if you put one more washer there (on the same hook)?

S: *I think it's going farther -*

I: How far do you think is it going to go?
Could you make a mark here (on the board)?
(The S made a mark, about 2 cm., the I held the plate while the S put the W).
It moved a little more. Now, what will happen if you put one more? Make a mark, please.
(S made a mark, about 2 cm., I held the plate while S put the W).
It moved a little more again ..... You were telling me before that these washers are pulling the plate, what else is it pulling?.....
there are different things here, what else is pulling?

S: *The string.....*

I: What is pulling the string?

S: *The washers.....*

I: And what else is pulling?

S: *The gravity.*

I: What do you mean by gravity?

S: *The gravity is pulling the washers down -*

I: Now, what about these things (elastic, plate)?

S: *This (the plate) is trying to pull back, but these (the washers) have got more strength than the elastic, so the plate moves forward and it doesn't go back.*

I: Why do you say that the washers have more strength?

S: *The elastic is stretched and it is trying to come back, and this (the washers) are really coming down ..... really hard..... and this (the elastic) is not pulling as hard.*

I: You say that the string is pulling the plate, is the plate pulling the string?

S: *Yes, sure it is, but not ..... like ..... the elastic is pulling the plate so the string is getting pulled but it is not getting as pulled as much as the weight or washers.*

I: Yeh, you say that the plate is pulling the elastic. Is the elastic pulling the plate?

S: *Yeh, the elastic is pulling the plate.... the string is pulling the plate so the plate is pulling two sides.... the string and the elastic.*

I: Now, what is the thumb tack doing here?

S: *It's holding the elastic from going forward -*

I: Is the thumb tack pulling?

S: *Not -*

I: Ah, it's not pulling, it's holding -

S: *Yeh, it's just staying there and it's holding the elastic -*

I: Now, Kevin, what do you think is going to happen if you put the three washers down there (on the lowest hook)?

S: *I think that the plate is going to come farther even more -*

I: Why do you think so?

S: *Well ..... because ..... ah .... .. it is near the ground..... and it's getting forced down more.*

I: What happens when those washers are nearer to the ground?

S: *The gravity is pulling them more and more.*

I: O.K. Do it please -

(I held the plate while the S moved the 3 Ws to the lowest hook).

S: *OH -*

I: It didn't move, how could you explain it?

S: *Maybe the elastic is pulling too hard now.*

I: What do you mean by too hard?

S: *I guess ... maybe ..... the little washers have the same weight.....and it didn't really matter how the gravity was pulling.*

I: Another change you would like to do is..... could you put please one washer in each hook..... What do you think is going to happen in this case?

S: *I think that it (the plate) is going to stay -*

I: Why do you think so?

S: *Because it is the same weight .... all the washers have the same weight as when they were in one hook at the first one and we put it on the bottom one ..... it didn't move because they had the same weight .... and now.... I think .....it won't move because it is still the same weight -*

I: O.K. (I released the plate).... that is true .....

O.K. Kevin, now we will move to the game number two (The S and the I prepared the setting of Task 2).

TASK TWO

I: If you put one W in that hook (top hook at subject's side). What is going to happen?

S: *This (the plate) is going to come forward (toward the S) -*

I: How far?

S: *Until that first hook (at I's side) reaches the pulley -*

I: Why?

S: *Because this weight is going to pull it (the plate) all the way -*

(S put the W, the plate moved all the way).

I: That is true.... if you want to keep the plate in the middle what could you do?

S: *You can put another one on that side (I's side) -*

(I put one W on his side)

I: That is true. O.K. If you put one more W in your side in the same hook, what do you think is going to happen?

S: *The plate is going to come until the weight hits the ground.*

I: O.K..... if you want to keep the plate in the middle what could you do?

S: *Put a second washer on the first hook (at I's side)*

I: O.K. ..... now, could you tell me what are these washers doing here?..... What are these Ws (at I's side) and those washers (at S's side) doing?

S: *Well, these washers or their weight is pulling down and those washers they are pulling down and so the plate stays in the middle.*

I: Now, what will happen if you put one washer in each hook in your side?

S: *I think it's going to stay the same..... because when we did the experiment with the elastic it didn't matter.... the ..... I think it's going to be the same and it won't matter now*
(S put one W in each hook) -

I: That is true.... one other thing I would like to do is the following: I am going to move this plate towards you .... to here (about 5 cms) and hold it with my fingers..... What will happen if I let it go?

S: *Because these two washers have to pull those two washers but they weigh the same so these washers are not able to pull those up because they weight the same as these two -*

(I released the plate).

I: That is true.... Now, I am going to move the plate in this direction.
(I displaced the plate in a perpendicular direction in respect to the direction of the strings and held it there).

What is going to happen in this case?

S: *It's going to go back to the middle -*

I: Why?

S: *These washers are pulling straight down .... and because they are pulling straight down this (the plate) has to go to the middle -*

I: But there is no string here (pulling towards the middle)

S: *Yeh, but these are pulling hard here and those are pulling hard.... there, it has to go to the middle -*

I: O.K. .... now, we can move to the experiment number three.

(S and I prepared the setting for Task Three).

TASK THREE

I: Well Kevin, I am going to start putting 3 Ws in one of these hooks (left hook at I's side). What is going to happen if I pull out the peg?

S: *This (hook at S's side) is going to move up and this string will move forward (towards the I) -*

I: O.K., if you want to keep the ring in the middle, what could you do?

S: *I have to put 3Ws here -*

I: Now, I will put 3 more Ws in the other hook (at I's side). What is going to happen in this case if I pull out the peg?

S: *Those two hooks will go down and this one will go up until it hits the pulley.*

I: And the ring?

S: *It will go towards you as far as this hook goes -*

(I pulled out the peg)

I: That is true.... then, what could you do if you want to keep the ring in the middle?

S: *I have to complete six Ws here -*

I: But these washers on my side are separated, there are three in each hook?

S: *That doesn't matter because they are all joined to the same....*

I: Now Kevin, I am going to move these pulleys..... this one here and the other one here (pulleys at I's side formed an angle of 90°).

I: What is going to happen if I pull out the stick in this case? -

S: *This one (hook at S's side) will go down.*

I: What happens when they are separated?

S: *They don't equal the same weight as they were when they were together .... then the ring is going to come this way (towards the S) -*

I: How far?

S: *Until the ring comes to the pulley.*

I: That's true even when the ring didn't move all the way..... ... If you want to keep the ring in the middle, what could you do?

S: *I can take 3 off from here or you can put 3 more Ws. in your hooks -*

I: O.K. What is going to happen if you take 3 off?

S: *The ring will stay in the middle -*

I: I don't see very clear why?

S: *Because each hook has 3 Ws, and the three weigh the same*

I: O.K.

(S removed 3 Ws from his side) -
Oh, it moved towards here (toward the I).
What could you do in this case if you want to keep the ring in the middle?

S: *I should put some more Ws in here..... I don't know how many -*

I: Why do you need to put more Ws there?

S: *Because I need more weight to make this (hook at S's side) come down.*

I: O.K. Try it -
(S put one)

Oh, now, it stays. Now, I want to move these pulleys a little more, this one here and the other one here

(strings at I's side formed an angle of 120°).

And in this case what is going to happen if I pull out the stick?

S: *It's going to come towards here (towards the S)*

I: Why do you think so?

S: *This string (at S's side) seems to be far away from those two.*

I: Maybe if you stand up you can see better.

S: *Maybe not..... but it will come closer to here (towards the S)*

I: Why?

S: *Because there are 4 Ws here and only 3 Ws on those -*

I: Yeh. O.K., we can try (I pulled out the peg). That's true. Well, what could you do to keep the ring in the middle?

S: *Take one off from here (at S's side) or else put one W in each of those -*

I: Do it please .... that's true. Why does it stay now?

S: *Yeh, because they are in different angles..... they are pulling in different angles.... now those are farther apart and they are not pulling as much as when they were together.*

I: Now Kevin, I'll move these pulleys a little more (180°). What will happen now?

S: *I think it's going to stay in the middle because all of them are pulling in different angles and they are pulling with the same weight... and they will drop with the same speed... so each one is going to pull towards each other..... they are all pulling the same so it's going to stay in the middle.*

I: Oh, it moved towards you..... Why did it move towards you?

S: *I don't know -*

I: Well, what could you do to keep the ring in the middle?

S: *Take away one W from here -*

(S took one W)

I: Oh, it still moves. What else could you do?

S: *Take all the Ws off.*

I: Why?

S: *Because those two are pulling the same way - and there is nothing pulling that way (from the opposite of S's side) -*

I: I see, O.K. Do it please ..... That's true. O.K. Kevin.... now I am going to move these pulleys a little more (240°), what will happen now if I pull out the peg?

S: *It's going to come towards here (towards the S).*

I: O.K. that's true. Now, we are going to come back to the beginning. Remember, we had 3 in each of these hooks (forming an angle of 90°) and 4 Ws in that hook - But now, I'll move these pulleys a little closer (75°), What will happen if I pull out the stick?

S: *It's going to come this way (towards the S) -*

I: Why?

S: *Because this one has 4 Ws and those only 3 Ws, this one overpowered those -*

(I removed the peg)

I: Oh, it moved towards me, how could you explain it?

S: *I guess because there were 6 Ws there and only 4 Ws here, the six overpowered the four.*

I: Why?

S: *Yeh, because 6 Ws weigh more than 4 Ws so they pull towards that way -*

I: O.K. what could you do to keep the ring in the middle?

S: *I have to put 6 Ws here -*

(S put 2 Ws)

I: Oh not, it moved towards you now. What else could you do?

S: *Take one off from here -*

I: O.K. Kevin, I am going to put one more W in this hook (left hook at I's side). What is going to happen in this case?

S: *It's going to stay in the middle -*

I: Why do you think so?
You have 3, 4, and 5 Ws now?

S: .... *Oh not .... it's going to pull towards that way (towards the hook with 4 Ws).*

I: Why?

S: *Because before with 3 and 3 in those hooks, it moved through the middle but now with that extra one it will move towards there.*
(S showed with his finger the direction along the string with 4 Ws).

I: How far is it going to move?

S: *About half way -*

(I removed the peg).

I: Do you think it moved along the string?

S: *Not.*

I: Then, what could you do to keep the ring in the middle?

S: *Take one off here and put one W in the other hook -*

I: I don't want to make changes in my side, you can make changes in your side.

S: *I'll put one W here -*

I: Do it please
(The ring stayed clse to the middle)
What else could you do?

S: *Maybe I can move this pulley a bit.*

I: O.K., do it please, in what direction?

S: *That way (toward the right side of S)*

(The ring and everything dropped to ground).

I: What else could you do?

S: *Maybe move it to the otherside.*

I: O.K., try it please
(S moved it to his left a bit. The ring stayed very close to the centre this time).
Now, It is almost in the middle.

S: *Yeh, it's not easy.*

I: Well Kevin, we can finish the experiments here. Thank you very much. I hope you enjoyed doing these experiments.
