NON-LINEAR ANALYSIS FOR TRANSVERSELY POST- TENSIONED TIMBER BRIDGE

By

Cai, Shen

B.Eng. & M.Eng. Beijing Institute of Civil Engineering and Architecture

A THESIS SUBMITTED IN PARTIAL FULFILLMENT OF

THE REQUIREMENTS FOR THE DEGREE OF

MASTER OF APPLIED SCIENCE

in

THE FACULTY OF GRADUATE STUDIES

CIVIL ENGINEERING

We accept this thesis as conforming

to the required standard

.....

.....

.....

.....

.....

.....

.....

.....

.....

THE UNIVERSITY OF BRITISH COLUMBIA

December 1991

© Cai, Shen, 1992

In presenting this thesis in partial fulfilment of the requirements for an advanced degree at the University of British Columbia, I agree that the Library shall make it freely available for reference and study. I further agree that permission for extensive copying of this thesis for scholarly purposes may be granted by the head of my department or by his or her representatives. It is understood that copying or publication of this thesis for financial gain shall not be allowed without my written permission.

(Signature)

Department of CIVIL ENGINEERING

The University of British Columbia
Vancouver, Canada

Date April 12, 1992

DE-6 (2/88)

ABSTRACT

Timber bridges have been very important in North America due to an abundant resource of the material and the relatively unsophisticated requirement for equipment and skilled labour. The transversely post-tensioned laminating method can improve the loading distribution capacity of the timber bridge structure and elongate the bridge service life. To develop a method for its analysis it is necessary to consider the non-linear behaviour of between-beams friction in the bridge structure.

A method and corresponding computer program (PTB) has been developed for the non-linear analysis for the transversely post-tensioned timber bridge. The finite strip element method is used in the analysis. Wheel loadings are idealized as patches with static uniformly distributed loadings. The beam to beam friction parameters were obtained from tests. The relative movements between beams, in three-directions, stresses and deformations of the structure are obtained by the PTB program. As an application, a bridge with post-tensioned T-beams made of Parallam is considered.

Table of Contents

List of Tables

List of Figures

Acknowledgement

The author takes this opportunity to gratefully acknowledge the guidance of his advisor Dr. Ricardo O. Foschi throughout this research and thesis preparation. His suggestions and advice during our discussions proved invaluable. The author also expresses his sincere gratitude to Dr. D.L. Anderson and Dr. H.G.L. Prion for reading this thesis and suggesting improvements.

The financial support in the form of a Research Assistantship from the National Engineering Research Council of Canada is gratefully acknowledged. Also acknowledged are contributions by MacMillan Bloedel Research Limited Centre such as the use of their laboratories in the friction testing of Parallam, and for providing other data on this composite product.

Chapter 1

INTRODUCTION

1.1 Background

Timber has been very important in North American bridge construction due to its abundance and the relatively unsophisticated requirements for equipment and skilled labour in comparison to steel and concrete bridges. More than a thousand timber bridges with short and medium spans have been built across Canada. Two kinds of bridges, using either nailed-laminated or glue-laminated construction have been most commonly designed.

In the first half of this century, with the high quality and high strength of steel and reinforced concrete materials being used more and more, timber as a material for bridge construction was progressively ignored. Structural engineers were reluctant to use timber in bridges, since the frequent failure of such bridges in the past convinced engineers that these structures could not be expected to last more than 40 years [1], leading to expensive replacements.

In 1973, the Ontario Ministry of Transportation and Communications began a laminated timber bridge testing program to evaluate the load carrying capacity of this kind of bridges. The results pointed out that the load carrying capacity and service life were a direct function of the 'tightness' of the structural system. 'Tightness' was defined as the ability of the structure to prevent relative movement between components and prevent the entry of harmful agents between adjoining interfaces [2]. The tightness also reflects

the loading distribution ability of the structure. In turn, this ability is an indication of the bridge load carrying capacity.

The bridge is a structure subjected to vehicle wheel loading, which is relatively concentrated. Slips between components of the deck (cover) would occur and form gaps. Water and incompressible materials (such as stones) would enter these gaps. The incompressible materials would force the gaps to remain open and make the deterioration of the structure worse, resulting in local deck failures after only a relative short service life.

Increasing the tightness of the bridge means increasing its load distribution capacity of the bridge and, consequently, increasing its loading carrying capacity. The transversely post-tensioned laminating process, developed for this purpose, was first used in Ontario, in 1976, for the rehabilitation of a nailed-laminated bridge cover. Comparison of the load test results obtained before and after the transverse post-tensioning indicated the effectiveness of the procedure in improving the load distribution and decreasing the deflection in the bridge [2]. Since then, the transverse post-tensioning method has been accepted in new bridge design and construction.

Timber bridges can be constructed in the four seasons of the year. This is especially important in Canada because of its winter weather. Their economic advantage has also been proven by cost statistics for short span bridges [3].

A method is needed to analyze the transversely post-tensioned timber bridge structure and obtain the relative interface movement under load. Such analysis could be used for the study of the reliability of the bridge for different performance criteria. The development of such an analysis is the main purpose of this research.

1.2 Literature Review

Previous research has developed different models for the two or three-dimensional analysis of stiffened plates.

Cheung [4] developed the finite strip approach to analyze thin rectangular plates with two opposite edges simply supported . A trigonometric series function was used in the approximation of the deflection of the plate between the two simply supported edges, while a finite element representation was used in the cross-direction. For this case, the finite strip element method required less computer memory and increases the computational efficiency when compared to standard finite elements techniques.

Foschi [5] used a combination of Fourier series and finite elements to analyze a type of timber floor system. This consists of a cover (deck) and the beams. The cover is fastened (nailed) to the timber beams to form a composite T-beam finite strip. The width of the T-beam flange is equal to the spacing between the beams. The flange (cover) is considered as an orthotropic thin plate in the analysis. FAP (Floor Analysis Program) was developed based on this model. The program can be used to consider gaps in the cover perpendicular to the span. However, the consideration of gaps caused coupling between the different Fourier terms in the global equations, requiring more computer memory and longer solution times.

Thompson, Goodman and Vanderbilt developed the computer program FEAFLO [6],[7], to analyze the same wood floor system, taking account of the composite behaviour between cover and beams. The method considered the floor as a system of crossing T- and rectangular beams, including the effects of slip between layers owing to fastener deformation.

Taylor [8] used the computer program ORTHOP to analyze the transversely post-tensioned Hebert Creek timber bridge, which assumed no transverse flexural stiffness in

the structural system while the transverse load transfer was due to vertical shear only. The friction coefficient between the timber interior surfaces was assumed to be about 0.5.

Onate and Suarez [9] used Mindlin's plate theory to establish an analytical model taking into account the effect of transverse shear deformation. In their model, the transverse section was discretized by one dimensional finite elements and the longitudinal behaviour of the structure was defined by Fourier series. The element was called the simple two noded strip element with one single integrating point.

Harik and Salamoun [10] also adopted the strip element to analyze the stiffened orthotropic rectangular plates. They idealized the stiffened plate as a system of plated strips and beam segments rigidly connected to each other.

All these analyses only performed a linear elastic study of the structural system. Actually, the system response is nonlinear and the non-linearities due to friction between components must be considered in a more general analysis.

1.3 Objectives of the Thesis

In order to obtain a general theoretical analysis, the non-linear properties for the transversely post-tensioned timber bridge must be considered. On the basis of the program FAP by Foschi [5], a non- linear, transversely post-tensioned timber bridge analysis computer program, PTB(Post-tensioned Timber Bridge), has been developed. The structure is shown in Figure 1.1.

Nonlinear springs, representing the nonlinear frictional behaviour between T-beams, are inserted between the T-beam elements. The analysis is limited to static loading. The thesis objective is the development of a method for the calculation of the relative displacement between two adjacent T-beams, under the vehicle wheel loading. The method and the PTB program can be used to obtain the relationship between maximum relative

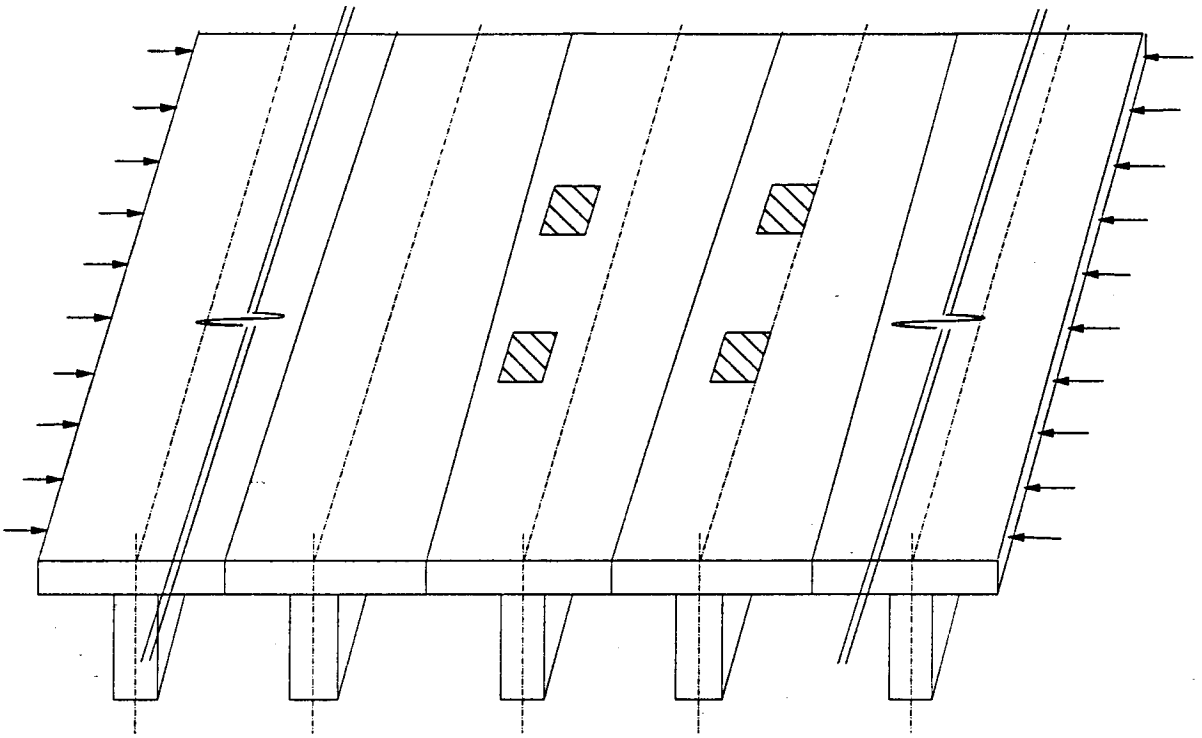

Figure 1.1: Analytical Structural Model

displacement and post-tensioning force, permitting the calculation of the force required to achieve a target maximum relative displacement.

The Newton-Raphson method [14] and the incremental loading method [15] are used to solve the non-linear problem. Since the non-linear behaviour of the friction springs produces coupling between the Fourier terms, the Jacobi iteration method [5] has been used to solve the coupled global equations. As an example, this Thesis considers a post-tensioned bridge with T-beams made with Parallam, a composite wood product manufactured by MacMillan Bloedel Ltd. of Vancouver, B.C..

Chapter 2

NON-LINEAR FINITE ELEMENT ANALYSIS

2.1 Structural Model

The bridge structural model consists of two types of structural elements, ie. the T-beam and the joint between beams shown in Figure 2.1. The joint element, as mentioned in Chapter 1, is assumed to represent the non-linear friction behaviour between the interfaces of the adjacent beams.

It is assumed that all the T-beam elements remain linearly elastic, with small deformations. The joint elements have non-elastic material properties. For the T-beam element, its flange can be assumed fastened to the web to produce an assembly capable of composite action, behaving as a stiffened plate under loading [5]. The flange may also be assumed to be rigidly connected to the web. Orthotropic thin plate theory [11] has been used in the analysis, to consider the different elastic properties of the flange in the directions perpendicular and parallel to the beams.

A semianalytical procedure [12] has been used here, assuming in the x-direction a Fourier series for the displacement function, and a finite element approximation along the y-direction. The T-beam and the joint elements are illustrated in Figure 2.2 . The displacements of the T-beam and the joint element are matched at their common nodes.

2.1.1 Middle surface displacement functions for the flange of the T-beam

These displacements are represented as follows:

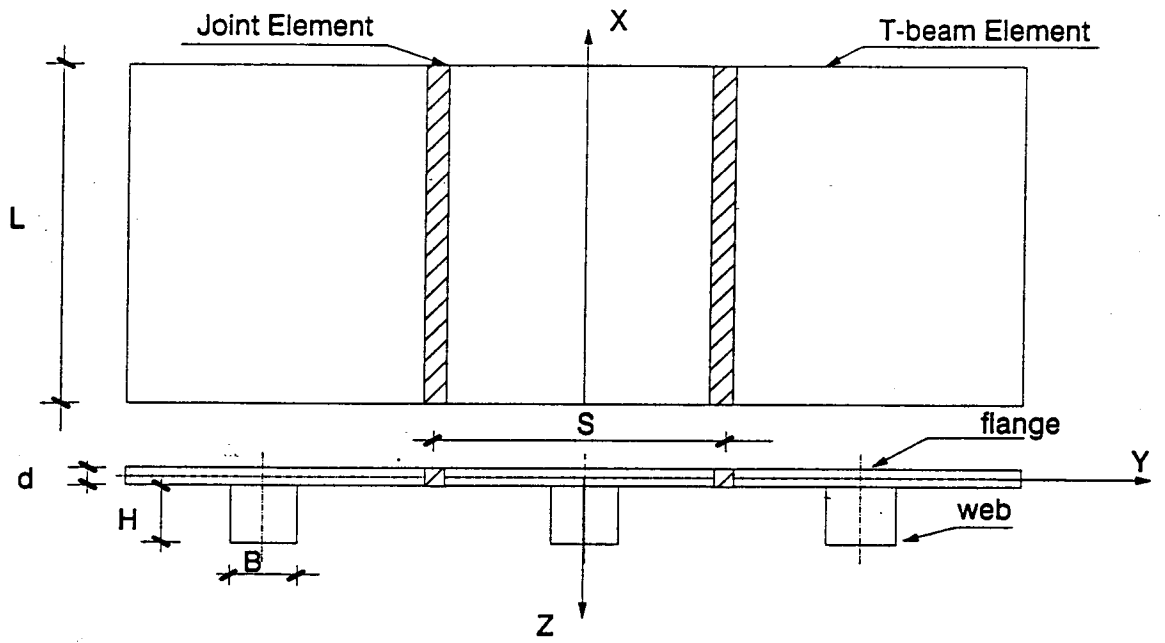

Figure 2.1: The Structural Model

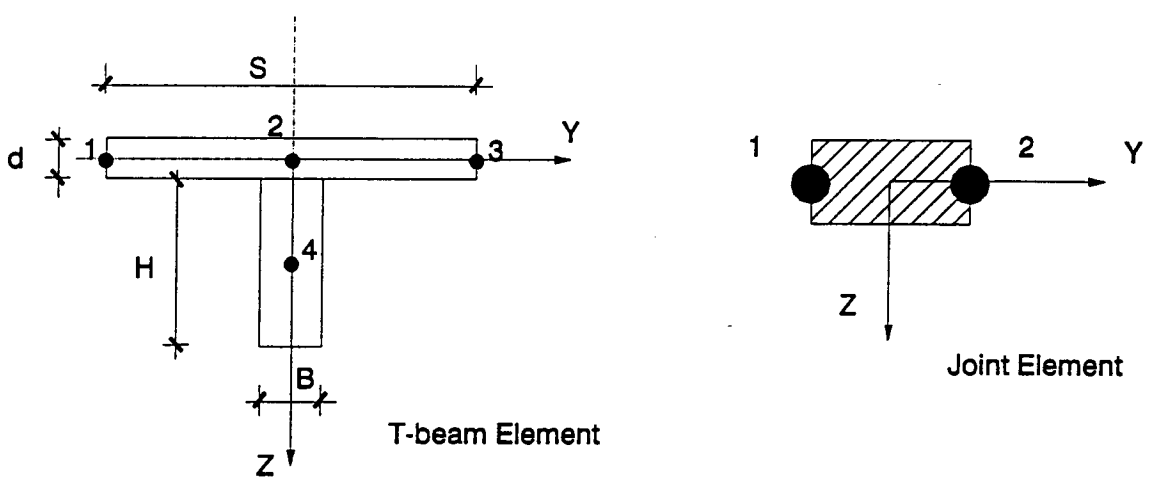

Figure 2.2: The T-beam Model and The Joint Model

1) in the z-direction

$$w(x,y) = \sum_{n=1}^{N} F_{1n}(y) sin(\frac{n\pi x}{L}) \tag{2.1}$$

2) in the x-direction

$$u(x,y) = \sum_{n=1}^{N} F_{2n}(y) cos(\frac{n\pi x}{L}) \tag{2.2}$$

3) in the y-direction

$$v(x,y) = \sum_{n=1}^{N} F_{3n}(y) sin(\frac{n\pi x}{L}) \tag{2.3}$$

where:

N = the number of terms used in the Fourier series

L = the span of the bridge

These displacements satisfy simply supported conditions at $x = 0$ and $x = L$. The functions $F_{1n}(y)$, $F_{2n}(y)$ and $F_{3n}(y)$ can be expressed in terms of polynomials in the non-dimensional variable $\xi = 2y/s$, where: s = the spacing of the T-beams. A 5th order polynomial is used for $F_{1n}(y)$, and 4th order polynomials for $F_{2n}(y)$ and $F_{3n}(y)$, with degrees of freedom associated with nodes 1, 2 and 3 in Figure 2.2. Thus, if $\{\delta_n\}$ is the vector of nodal displacements, $F_{1n}(\xi)$, $F_{2n}(\xi)$ and $F_{3n}(\xi)$ and their corresponding derivatives can be written as:

$$F_{1n}(\xi) = \{M_0(\xi)\}^T\{\delta_n\} \tag{2.4}$$

$$F_{2n}(\xi) = \{M_3(\xi)\}^T\{\delta_n\} \tag{2.5}$$

$$F_{3n}(\xi) = \{M_5(\xi)\}^T\{\delta_n\} \tag{2.6}$$

with corresponding derivatives:

$$\frac{dF_{1n}(\xi)}{d\xi} = \{M_1(\xi)\}^T\{\delta_n\} \tag{2.7}$$

$$\frac{d^2F_{1n}(\xi)}{d\xi^2} = \{M_2(\xi)\}^T\{\delta_n\} \tag{2.8}$$

$$\frac{dF_{2n}(\xi)}{d\xi} = \{M_4(\xi)\}^T\{\delta_n\} \tag{2.9}$$

$$\frac{dF_{3n}(\xi)}{d\xi} = \{M_6(\xi)\}^T\{\delta_n\} \tag{2.10}$$

The vectors $\{M_1(\xi)\}$ to $\{M_6(\xi)\}$ are given in Appendix A.

2.1.2 Displacement functions for the centroid of the T-beam web

These are expressed as follows:

1) in the z-direction

$$W(x) = \sum_{n=1}^{N} W_{4n} sin(\frac{n\pi x}{L}) \tag{2.11}$$

2) in the x-direction

$$U(x) = \sum_{n=1}^{N} U_{4n} cos(\frac{n\pi x}{L}) \tag{2.12}$$

3) in the y-direction

$$V(x) = \sum_{n=1}^{N} V_{4n} sin(\frac{n\pi x}{L}) \tag{2.13}$$

4) rotation about x-axis

$$\theta(x) = \sum_{n=1}^{N} \theta_{4n} sin(\frac{n\pi x}{L}) \tag{2.14}$$

The vector $\{\delta_n\}$, associated with the nth term of the Fourier series, is shown in Equation 2.15. Each T-beam element has 19 degrees of freedom.

$$\{\delta_n\} = \begin{Bmatrix} w_{1n} \\ w'_{1n} \cdot s \\ u_{1n} \\ u'_{1n} \cdot s \\ v_{1n} \\ v'_{1n} \cdot s \\ u_{2n} \\ v_{2n} \\ w'_{2n} \cdot s \\ W_{4n} \\ U_{4n} \\ V_{4n} \\ \theta_{4n} \cdot s \\ w_{3n} \\ w'_{3n} \cdot s \\ u_{3n} \\ u'_{3n} \cdot s \\ v_{3n} \\ v'_{3n} \cdot s \end{Bmatrix} \tag{2.15}$$

The prime (') denotes the derivative with respect to y. For example, $w'_{1n} \cdot s$ is the derivative of $w(x, y)$with respect to y at node 1 associated with the nth item of Fourier series. The rotation degree of freedom is multiplied by the beam spacing s to make all components in $\{\delta_n\}$ dimensionally consistent.

2.1.3 Degrees of freedom for the joint element

Similar to the T-beam element, the degrees of freedom for the joint element are associated with the each term of the Fourier series.

$$\{\delta_n^J\} = \begin{Bmatrix} w_{1n} \\ w'_{1n} \cdot s \\ u_{1n} \\ v_{1n} \\ w_{2n} \\ w'_{2n} \cdot s \\ u_{2n} \\ v_{2n} \end{Bmatrix} \tag{2.16}$$

The joint element consists of discrete three-dimensional springs at both the top and the bottom of the flanges along the bridge span shown in Figure 2.3. The dots show the positions of the three-dimensional springs which connect the flanges of two adjacent T-beam elements. The three-dimensional spring can act in the x-, the y- and the z-direction.

The constitutive relationships for the x-, y- and z-direction springs are illustrated in Figure 2.4, where:

μ_x = the friction coefficient of the T-beam flange in the x-direction;

μ_z =the friction coefficient of the T-beam flange in the z-direction;

σ_y = the normal stress in the T-beam flange caused by post-tensioning force;

e = the spring separation along the x-direction;

t = the width of spring's effective area;

Δx = the elongation of the spring in the x-direction;

Δy = the elongation of the spring in the y-direction;

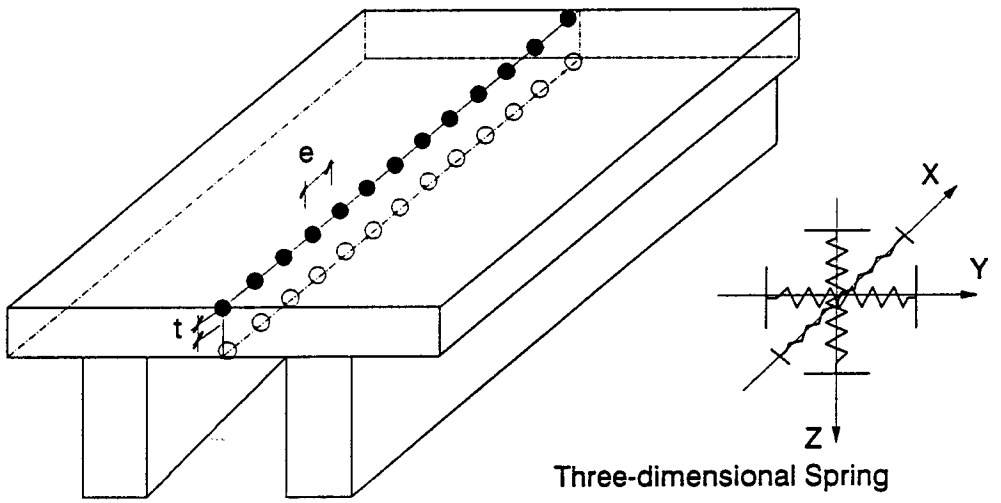

Figure 2.3: The Distribution of the Discrete Springs

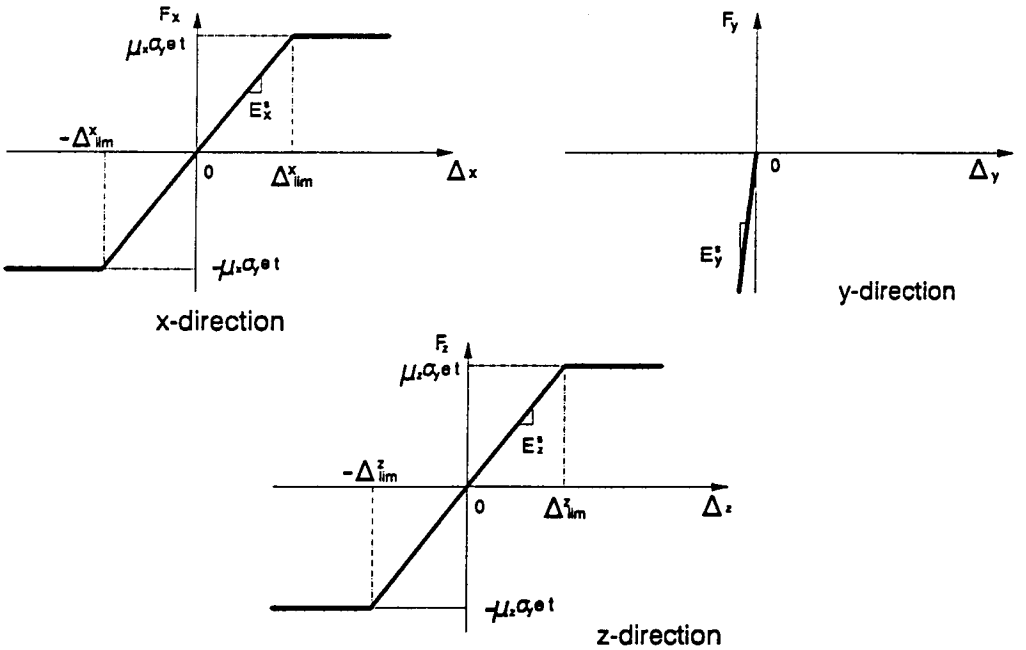

Figure 2.4: The Constitutive Relationship of the Springs

Δz = the elongation of the spring in the z-direction

The elongation of the spring is represented by the relative displacement between the two adjacent T-beam flanges at the corresponding location of each spring.

When the relative displacement of the spring in the x-direction or in the z-direction (see Equation 2.54 and Equation 2.56) exceeds the corresponding friction limit, the spring loses its stiffness in the corresponding direction, but maintains a constant force equal to the friction force.

The spring in the y-direction is used as a contact spring, to permit flange separation but not overlapping. When the relative displacement is negative or zero, ie. the two flanges tend to overlap each other, the stiffness of the y-direction spring is set very high, to enforce no overlapping between them. Thus, when the relative displacement is positive, which means that there is a separation between two adjacent T-beam flanges at the spring position, the spring is inactive or has no stiffness and no force in it. When the spring in y-direction loses its stiffness, this spring will not make contribution to the stiffness matrix. The effects of the springs in the x- and the z-direction depend on the 'contact condition', ie, if there is a separation, the springs in the x- and in the z-direction are not active.

2.2 Strain Energy of the Structural System and Virtual Work

The energy variational approach and the principle of virtual work are to establish the global equations for the structure. In this section, the strain energy of each component and the virtual work done by the conservative and the non-conservative forces are presented in terms of nodal displacement degree of freedom.

2.2.1 Strain energy in the flange of the T-beam element

The strain energy per unit area of flange can be obtained by applying small deflection orthotropic plate theory.

$$\begin{aligned} U_{fu} &= \frac{K_x}{2}(\frac{\partial^2 w}{\partial x^2})^2 + \frac{K_y}{2}(\frac{\partial^2 w}{\partial y^2})^2 + K_v(\frac{\partial^2 w}{\partial x^2})(\frac{\partial^2 w}{\partial y^2}) \\ &+2K_G(\frac{\partial^2 w}{\partial x \partial y})^2 + \frac{D_x}{2}(\frac{\partial u}{\partial x})^2 + \frac{D_y}{2}(\frac{\partial v}{\partial y})^2 \\ &+D_v(\frac{\partial u}{\partial x}\frac{\partial v}{\partial y}) + \frac{D_G}{2}(\frac{\partial u}{\partial y} + \frac{\partial v}{\partial x})^2 \end{aligned} \tag{2.17}$$

For the plate with the thickness d, the stiffnesses K_x,K_y,K_v,K_G, D_x,D_y,D_v and D_G are given as follows:

1) the flexural stiffness in the x-direction

$$K_x = \frac{E_x d^3}{12(1 - \nu_{xy}\nu_{yx})}$$

2) the flexural stiffness in the y-direction

$$K_y = \frac{E_y d^3}{12(1 - \nu_{xy}\nu_{yx})}$$

and

$$K_v = \nu_{xy} K_x$$

3) the torsional stiffness

$$K_G = \frac{Gd^3}{12}$$

4) the axial stiffness in the x-direction

$$D_x = \frac{E_x d}{(1 - \nu_{xy}\nu_{yx})}$$

5) the axial stiffness in the y-direction

$$D_y = \frac{E_y d}{(1 - \nu_{xy}\nu_{yx})}$$

and

$$D_v = \nu_{xy} D_x$$

6) the shear stiffness in plane

$$D_G = G \cdot d$$

in which,

d =the thickness of the flange;

E_x = the elastic modulus of the flange material in the x-direction;

E_y = the elastic modulus of the flange material in the y-direction;

ν_{xy} = the Poisson's ratio, strain in the x-direction when stress is applied in y-direction;

ν_{yx} = the Poisson's ratio, strain in the y-direction when stress is applied in the x-direction;

G = the shear modulus in the x-y plane.

The total strain energy U_f in the element flange can be obtained by integrating U_{fu} over the whole area of the flange.

$$U_f = \int_{\frac{-s}{2}}^{\frac{s}{2}} \int_0^L U_{fu} dx dy \tag{2.18}$$

Substituting Equation 2.17 and derivatives of the $w(x,y), u(x,y)$ and $v(x,y)$ (shown in Appendix A) into Equation 2.18, the total strain energy in the flange of one T-beam element is obtained in terms of the vectors $\{\delta_n\}$. The integration makes use of the orthogonality of the trigonometric functions in the interval (0,L):

$$\int_0^L cos(\frac{n\pi x}{L})cos(\frac{m\pi x}{L}) = \{ \begin{array}{ll} \frac{L}{2} & m = n \\ 0 & m \neq n \end{array}$$

$$\int_0^L sin(\frac{n\pi x}{L})sin(\frac{m\pi x}{L}) = \{ \begin{array}{ll} \frac{L}{2} & m = n \\ 0 & m \neq n \end{array}$$

$$\xi = \frac{2y}{s}, \quad d\xi = \frac{2}{s}dy, \quad dy = \frac{s}{2}d\xi$$

Thus,

$$U_f = \sum_{i=1}^{8} U_{fi} \tag{2.19}$$

where the U_{fi} components are given as follows:

$$\begin{aligned} U_{f1} &= \int_{\frac{-s}{2}}^{\frac{s}{2}} \{\int_0^L U_{fu1} dx\} dy \\ &= \sum_{n=1}^{N} \frac{K_x n^4 \pi^4 s}{8L^3} \int_{-1}^{1} \{\delta_n\}^T \{M_0(\xi)\}\{M_0(\xi)\}^T \{\delta_n\} d\xi \end{aligned} \tag{2.20}$$

$$\begin{aligned} U_{f2} &= \int_{\frac{-s}{2}}^{\frac{s}{2}} \{\int_0^L U_{fu2} dx\} dy \\ &= \sum_{n=1}^{N} \frac{K_y}{2} (\frac{2}{S})^3 \frac{L}{2} \int_{-1}^{1} \{\delta_n\}^T \{M_2(\xi)\}\{M_2(\xi)\}^T \{\delta_n\} d\xi \end{aligned} \tag{2.21}$$

$$\begin{aligned} U_{f3} &= \int_{\frac{-s}{2}}^{\frac{s}{2}} \{\int_0^L U_{fu3} dx\} dy \\ &= \sum_{n=1}^{N} -K_v (\frac{n\pi}{L})^2 (\frac{2}{s}) \frac{L}{2} \int_{-1}^{1} \{\delta_n\}^T \{M_0(\xi)\}\{M_2(\xi)\}^T \{\delta_n\} d\xi \end{aligned} \tag{2.22}$$

$$\begin{aligned} U_{f4} &= \int_{\frac{-s}{2}}^{\frac{s}{2}} \{ \int_0^L U_{fu4} dx \} dy \\ &= \sum_{n=1}^{N} 2K_G (\frac{n\pi}{L})^2 (\frac{s}{2}) \frac{L}{2} \int_{-1}^{1} \{\delta_n\}^T \{M_1(\xi)\} \{M_1(\xi)\}^T \{\delta_n\} d\xi \end{aligned} \tag{2.23}$$

$$\begin{aligned} U_{f5} &= \int_{\frac{-s}{2}}^{\frac{s}{2}} \{ \int_0^L U_{fu5} dx \} dy \\ &= \sum_{n=1}^{N} \frac{D_x}{2} (\frac{n\pi}{L})^2 (\frac{s}{2}) \frac{L}{2} \int_{-1}^{1} \{\delta_n\}^T \{M_3(\xi)\} \{M_3(\xi)\}^T \{\delta_n\} d\xi \end{aligned} \tag{2.24}$$

$$\begin{aligned} U_{f6} &= \int_{\frac{-s}{2}}^{\frac{s}{2}} \{ \int_0^L U_{fu6} dx \} dy \\ &= \sum_{n=1}^{N} \frac{D_y}{2} (\frac{2}{s}) \frac{L}{2} \int_{-1}^{1} \{\delta_n\}^T \{M_6(\xi)\} \{M_6(\xi)\}^T \{\delta_n\} d\xi \end{aligned} \tag{2.25}$$

$$\begin{aligned} U_{f7} &= \int_{\frac{-s}{2}}^{\frac{s}{2}} \{ \int_0^L U_{fu7} dx \} dy \\ &= \sum_{n=1}^{N} D_v (\frac{n\pi}{L}) \frac{L}{2} \int_{-1}^{1} \{\delta_n\}^T \{M_3(\xi)\} \{M_6(\xi)\}^T \{\delta_n\} d\xi \end{aligned} \tag{2.26}$$

$$\begin{aligned} U_{f8} &= \int_{\frac{-s}{2}}^{\frac{s}{2}} \{ \int_0^L U_{fu8} dx \} dy \\ &= \sum_{n=1}^{N} \frac{D_G}{2} \frac{sL}{4} \int_{-1}^{1} \{\delta_n\}^T [XX] \{\delta_n\} d\xi \end{aligned} \tag{2.27}$$

Where:

$$\begin{aligned}[XX] &= (\frac{2}{s})^2\{M_4(\xi)\}\{M_4(\xi)\}^T + (\frac{n\pi}{L})^2\{M_5(\xi)\}\{M_5(\xi)\}^T \\ &+(\frac{n\pi}{L})(\frac{2}{s})\{\{M_5(\xi)\}\{M_4(\xi)\}^T + \{M_4(\xi)\}\{M_5(\xi)\}^T\} \end{aligned} \quad (2.28)$$

2.2.2 Strain energy in the web

This is given in terms of the displacements U, V and W and the rotation θ. Thus,

$$U_j = \frac{EI_y}{2}\int_0^L(\frac{d^2W}{dx^2})^2dx + \frac{EI_z}{2}\int_0^L(\frac{d^2V}{dx^2})^2dx + \frac{EA}{2}\int_0^L(\frac{dU}{dx})^2dx + \frac{GI_t}{2}\int_0^L(\frac{d\theta}{dx})^2dx \quad (2.29)$$

Where:

$I_y = (BH^3/12)$ the moment of inertia about the y-axis;

$I_z = (HB^3/12)$ the moment of inertia about the z-axis;

$I_t = \beta HB^3$ the torsional moment of inertia;

$A = BH$, the T-beam web cross sectional area;

E = the elastic modulus of the web;

G = the shear modulus of the web.

β = the torsional coefficient dependent on the ratio (H/B) [13].

It can be assumed that the ratio E/G is fixed. For most wood products, this is a large number, eg. $E/G = 17.0$.

Substituting the derivatives of the W(x), U(x) V(x) and $\theta(x)$ (see Appendix A) into Equation 2.29 the strain energy of the web can be written as:

$$U_j = \sum_{i=1}^{4} U_{ji} \tag{2.30}$$

in which

$$\begin{aligned} U_{j1} &= \frac{EI_y}{2}\int_0^L (\frac{d^2W}{dx^2})^2 dx \\ &= \frac{EI_y}{2}\sum_{n=1}^{N}\sum_{m=1}^{N}\int_0^L W_{4n}W_{4m}(\frac{n\pi}{L})^2(\frac{m\pi}{L})^2 sin(\frac{n\pi x}{L})sin(\frac{m\pi x}{L})dx \\ &= \frac{EI_y}{2}\sum_{n=1}^{N}(W_{4n})^2(\frac{n\pi}{L})^4(\frac{L}{2}) \end{aligned} \tag{2.31}$$

$$\begin{aligned} U_{j2} &= \frac{EI_z}{2}\int_0^L (\frac{d^2V}{dx^2})^2 dx \\ &= \frac{EI_y}{2}\sum_{n=1}^{N}\sum_{m=1}^{N}\int_0^L V_{4n}V_{4m}(\frac{n\pi}{L})^2(\frac{m\pi}{L})^2 sin(\frac{n\pi x}{L})sin(\frac{m\pi x}{L})dx \\ &= \frac{EI_z}{2}\sum_{n=1}^{N}(V_{4n})^2(\frac{n\pi}{L})^4(\frac{L}{2}) \end{aligned} \tag{2.32}$$

$$\begin{aligned} U_{j3} &= \frac{EA}{2}\int_0^L (\frac{dU}{dx})^2 dx \\ &= \frac{EA}{2}\sum_{n=1}^{N}\sum_{m=1}^{N}\int_0^L U_{4n}U_{4m}(\frac{n\pi}{L})(\frac{m\pi}{L}) sin(\frac{n\pi x}{L})sin(\frac{m\pi x}{L})dx \\ &= \frac{EA}{2}\sum_{n=1}^{N}(U_{4n})^2(\frac{n\pi}{L})^2(\frac{L}{2}) \end{aligned} \tag{2.33}$$

$$\begin{aligned} U_{j4} &= \frac{GI_t}{2}\int_0^L (\frac{d\theta}{dx})^2 dx \\ &= \frac{GI_t}{2}\sum_{n=1}^{N}\sum_{m=1}^{N}\int_0^L \theta_{4n}\theta_{4m}(\frac{n\pi}{L})(\frac{m\pi}{L}) cos(\frac{n\pi x}{L})cos(\frac{m\pi x}{L})dx \\ &= \frac{GI_t}{2}\sum_{n=1}^{N}(\theta_{4n})^2(\frac{n\pi}{L})^2(\frac{L}{2}) \end{aligned} \tag{2.34}$$

2.2.3 Strain energy in the web-flange connector

Three kinds of deformations have been considered in the connectors between the flange and the beam.

1) The deformation of the connector parallel to the beam:

$$\Delta u = \left[u_2 - \frac{d}{2}(\frac{\partial w_2}{\partial x})\right] - \left[U + \frac{H}{2}\frac{dW}{dx}\right] \tag{2.35}$$

2) The deformation of the connector perpendicular to the beam:

$$\Delta v = \left[v_2 - \frac{d}{2}(\frac{\partial w_2}{\partial y})\right] - \left[V + \frac{H}{2}\theta\right] \tag{2.36}$$

3) The rotation deformation of the connector about the x-axis

$$\Delta \phi = (\frac{\partial w_2}{\partial y}) - \theta \tag{2.37}$$

Where:

d = the thickness of the flange

H = the height of the web

u_2 = the displacement in the flange at point 2 in the x-direction

v_2 = the displacement in the flange at point 2 in the y-direction

w_2 = the displacement in the flange at point 2 in the z-direction

The flange is assumed connected by uniformly spaced discrete connectors along the longitudinal centerline of the beam. Thus, the total strain energy in the connectors in each T-beam is:

$$U_N = \sum_{i=1}^{NA}[\frac{k_x}{2}(\Delta u)_i^2 + \frac{k_y}{2}(\Delta v)_i^2 + \frac{k_\theta}{2}(\Delta \phi)_i^2] \tag{2.38}$$

Where:

NA = the number of the total connectors in one T-beam;

$(\Delta u)_i$ = the deformation in the x-direction for the ith connectors;

$(\Delta v)_i$ = the deformation in the y-direction for the i^{th}connectors;

$(\Delta \phi)_i$ = the rotation deformation for the ith connector about the x-axis;

k_x = the stiffness of a single connector corresponding to the x-direction;

k_y = the stiffness of a single connector corresponding to the y-direction;

k_θ = the rotation stiffness of a single connector.

Alternatively, an equivalent continuous connector model can be used to calculate the strain energy of the connectors per T-beam.

$$U_N = \int_0^L [\frac{k_x}{2e}(\Delta u)^2 + \frac{k_y}{2e}(\Delta v)^2 + \frac{k_\theta}{2e}(\Delta \phi)^2]dx \tag{2.39}$$

where e = the connector spacing along the beam.

Substituting Equation 2.1 - Equation 2.3 , Equation 2.11 - Equation 2.14 and the corresponding derivatives into Equation 2.35 - Equation 2.37,

$$\begin{aligned}
\Delta u &= \sum_{n=1}^{N}[F_{2n}(y=0)cos(\frac{n\pi x}{L}) - \frac{d}{2}F_{1n}(y=0)\frac{n\pi}{L}cos(\frac{n\pi x}{L}) \\
&\quad -U_{4n}cos(\frac{n\pi x}{L}) - \frac{H}{2}W_{4n}\frac{n\pi}{L}cos(\frac{n\pi x}{L})] \\
&= \sum_{n=1}^{N}[u_{2n} - \frac{d}{2}W_{4n}\frac{n\pi}{L} - U_{4n} - W_{4n}\frac{n\pi}{L}\frac{H}{2}]cos(\frac{n\pi x}{L})
\end{aligned} \tag{2.40}$$

$$\begin{aligned}\Delta v &= \sum_{n=1}^{N}[F_{3n}(y=0) - \frac{d}{2}\frac{dF_{1n}(y=0)}{dy} - V_{4n} - \frac{H}{2}\theta_{4n}]sin(\frac{n\pi x}{L}) \\ &= \sum_{n=1}^{N}[v_{2n} - \frac{d}{2}w'_{2n} - V_{4n} - \frac{H}{2}\theta_{4n}]sin(\frac{n\pi x}{L}) \end{aligned} \tag{2.41}$$

$$\Delta\phi = \sum_{n=1}^{N}[w'_{2n} - \theta_{4n}]sin(\frac{n\pi x}{L}) \tag{2.42}$$

Finally, introducing these three Equations into Equation 2.39,

$$\begin{aligned}U_N = \sum_{n=1}^{N}\frac{L}{2}\frac{1}{2e}\{&k_x[u_{2n} - U_{4n} - W_{4n}(H+d)]^2 \\ &+k_y[v_{2n} - \frac{d}{2}w'_{2n} - V_{4n} - \frac{H}{2}\theta_{4n}]^2 \\ &+k_\theta[w'_{2n} - \theta_{4n}]^2\}\end{aligned} \tag{2.43}$$

In order to express the strain energy of the connector in terms of the nodal degrees of freedom, we introduce a set of $(19x1)$ vectors $\{e_i\}$ such that the i-th entry row is unit, but all other rows are zero. Substituting Equation 2.15 and $\{e_7\}^T$, $\{e_8\}^T \ldots \{e_{13}\}^T$ into the Equation 2.43, the strain energy of the connector can be written as follows:

$$U_N = \sum_{n=1}^{N}\frac{L}{2}\frac{1}{2e}\{k_x\{X\} + k_y\{Y\} + \frac{k_\theta}{S}\{\Theta\}\} \tag{2.44}$$

Where:

$$\begin{aligned}\{X\} &= \{\delta_n\}^T[\{e_7\} - \{e_{11}\} - \{e_{10}\}(H+d)]\cdot \\ &\quad [\{e_7\} - \{e_{11}\} - \{e_{10}\}(H+d)]^T\{\delta_n\}\end{aligned} \tag{2.45}$$

$$\begin{aligned}\{Y\} &= \{\delta_n\}^T \left[\{e_8\} - \{e_9\}\frac{d}{2S} - \{e_{12}\} - \{e_{13}\}\frac{H}{2S}\right] \cdot \\ &\quad \left[\{e_8\} - \{e_9\}\frac{d}{2S} - \{e_{12}\} - \{e_{13}\}\frac{H}{2S}\right]^T \{\delta_n\} \end{aligned} \tag{2.46}$$

$$\begin{aligned}\{\Theta\} &= \{\delta_n\}^T [\{e_9\} - \{e_{13}\}] \cdot \\ &\quad [\{e_9\} - \{e_{13}\}]\{\delta_n\} \end{aligned} \tag{2.47}$$

2.2.4 Virtual work done by non-conservative forces in the joint element

The joint element consists of $2N_s$ 'three dimensional' springs. The deformations of the ith 'three-dimensional spring' in the x-, the y- and the z-direction are expressed, respectively, as follows.

When a spring is at the top of the flange its z-coordinate is $-0.5d$, and its z-coordinate is $0.5d$ when it is at the bottom of the flange.

Along the x-direction,

$$u(x_i, z_i) = u(x_i) - z_i \left(\frac{\partial w}{\partial x}\right)_{xi} \tag{2.48}$$

with the spring elongation then being,

$$\begin{aligned}\Delta u(x_i, z_i) &= u_2(x_i, z_i) - u_1(x_i, z_i) \\ &= -u_1(x_i) + u_2(x_i) + z_i \left(\frac{\partial w_1}{\partial x}\right)_{x_i} - z_i \left(\frac{\partial w_2}{\partial x}\right)_{x_i} \end{aligned} \tag{2.49}$$

Similarly, along the y-direction,

$$v(x_i, z_i) = v(x_i) - z_i \left(\frac{\partial w}{\partial y}\right)_{xi} \tag{2.50}$$

with elongation

$$\begin{aligned}\Delta v(x_i, z_i) &= v_2(x_i, z_i) - v_1(x_i, z_i) \\ &= -v_1(x_i) + v_2(x_i) + z_i \left(\frac{\partial w_1}{\partial y}\right)_{x_i} - z_i \left(\frac{\partial w_2}{\partial y}\right)_{x_i}\end{aligned} \tag{2.51}$$

For the z-direction,

$$w(x_i, z_i) = w(x_i) \tag{2.52}$$

and the spring elongation is:

$$\begin{aligned}\Delta w(x_i, z_i) &= w_2(x_i, z_i) - w_1(x_i, z_i) \\ &= -w_1(x_i) + w_2(x_i)\end{aligned} \tag{2.53}$$

Substituting the displacement functions of the T-beam flange and the corresponding derivatives in $\Delta u(x_i, z_i)$, $\Delta v(x_i, z_i)$ and $\Delta w(x_i, z_i)$ above,

$$\Delta u(x_i, z_i) = \sum_{n=1}^{N} [-u_{1n} + u_{2n} + z_i \frac{n\pi}{L} w_{1n} - z_i \frac{n\pi}{L} w_{1n}] cos(\frac{n\pi x_i}{L}) \tag{2.54}$$

$$\Delta v(x_i, z_i) = \sum_{n=1}^{N} [-v_{1n} + v_{2n} + z_i w'_{1n} - z_i w'_{2n}] sin(\frac{n\pi x_i}{L}) \tag{2.55}$$

$$\Delta w(x_i, z_i) = \sum_{n=1}^{N} [-w_{1n} + w_{2n}] sin(\frac{n\pi x_i}{L}) \tag{2.56}$$

which can be written in terms of the nodal degree of freedom vector.

$$\{\Delta\} = \begin{Bmatrix} \Delta u \\ \Delta v \\ \Delta w \end{Bmatrix} \tag{2.57}$$

$$\{\Delta\} = \sum_{n=1}^{N}\{\Delta_n\} = \sum_{n=1}^{N}[B_n]\{\delta_n^J\} \tag{2.58}$$

Where:

$$\{\Delta_n\} = \begin{Bmatrix} \{\Delta u_n\} \\ \{\Delta v_n\} \\ \{\Delta w_n\} \end{Bmatrix} \tag{2.59}$$

$$[B_n]^T = \begin{bmatrix} z_i(\frac{n\pi}{L})cos(\frac{n\pi x_i}{L}) & 0 & -sin(\frac{n\pi x_i}{L}) \\ 0 & \frac{z_i}{S}sin(\frac{n\pi x_i}{L}) & 0 \\ -cos(\frac{n\pi x_i}{L}) & 0 & 0 \\ 0 & -sin(\frac{n\pi x_i}{L}) & 0 \\ -z_i(\frac{n\pi}{L})cos(\frac{n\pi x_i}{L}) & 0 & sin(\frac{n\pi x_i}{L}) \\ 0 & -\frac{z_i}{S}sin(\frac{n\pi x_i}{L}) & 0 \\ cos(\frac{n\pi x_i}{L}) & 0 & 0 \\ 0 & sin(\frac{n\pi x_i}{L}) & 0 \end{bmatrix} \tag{2.60}$$

The forces in one 'three-dimensional' spring will be:

$$\{F\} = [D]\{\Delta\} = [D]\sum_{n=1}^{N}[B_n]\{\delta_n^J\} \tag{2.61}$$

Where:

$$[D] = \begin{bmatrix} E_x^s & 0 & 0 \\ 0 & E_y^s & 0 \\ 0 & 0 & E_z^s \end{bmatrix} \tag{2.62}$$

E_x^s = the stiffness modulus of the spring in the x-direction

E_y^s = the stiffness modulus of the spring in the y-direction

E_z^s = the stiffness modulus of the spring in the z-direction

Assuming that the structural system is subjected to a virtual displacement, corresponding to a virtual change in the nodal displacement vector for the joint element $\{\delta^J\}^*$, and the arbitrary deformations of the spring can be obtained:

$$\{\Delta\}^* = \sum_{n=1}^{N} [B_n]\{\delta_n^J\}^* \tag{2.63}$$

The internal virtual work in one 'three-dimensional' spring is, therefore,

$$\begin{aligned} W_i^* &= [\{\Delta\}^*]^T\{F\} \\ &= \sum_{n=1}^{N} (\{\delta_n^J\}^*)^T [B_n]^T \{F\} \\ &= \sum_{n=1}^{N}\sum_{m=1}^{N} (\{\delta_n^J\}^*)^T [B_n]^T [D][B_m]\{\delta_m^J\} \end{aligned} \tag{2.64}$$

The internal virtual work in one joint element is then the sum

$$W^* = \sum_{i=1}^{2N_s} W_i^* \tag{2.65}$$

where $2N_s$ = the number of the total three dimensional spring in one joint element.

2.3 Global Equation

The global system of equations for the structural system is

$$[G]\{U\} = \{P\} \tag{2.66}$$

in which:

$[G]$ = the global stiffness matrix

$\{U\}$ = the global nodal displacement vector

$\{P\}$ = the global consistent load vector

The global stiffness matrix, the global nodal displacement vector and the global consistent load vector are assembled by the total contributions from each individual element using the conventional finite element method.

2.3.1 Stiffness contribution from one T-beam element

The stiffness contribution of one T-beam element can be derived by minimizing the total strain energy in the T-beam element. The total strain energy of the T-beam is the summation of the strain energy of the flange, the strain energy of the web and the strain energy of the connectors.

$$\begin{aligned} U &= U_f + U_j + U_N \\ &= \sum_{i=1}^{8} U_{fi} + \sum_{i=1}^{4} U_{ji} + \sum_{i=1}^{3} U_{Ni} \end{aligned} \tag{2.67}$$

Take the first variation of the strain energy of the flange with respect to the $\{\delta_n\}$, we get the stiffness contribution from the T-beam.

$$\begin{aligned} \delta(U_n) &= \delta(U_f)_n + \delta(U_j)_n + \delta(U_N)_n \\ &= \sum_{i=1}^{8}(\delta U_{fi})_n + \sum_{i=1}^{4}(\delta U_{ji})_n + \sum_{i=1}^{3}(\delta U_{Ni})_n \end{aligned} \tag{2.68}$$

$$\delta(U_{f1})_n = \frac{K_x n^4 \pi^4 s}{4L^3}[\int_{-1}^{1}\{M_0(\xi)\}\{M_0(\xi)\}^T d\xi]\{\delta_n\} \tag{2.69}$$

$$\delta(U_{f2})_n = \frac{K_y}{2}(\frac{2}{s})^3 L[\int_{-1}^{1}\{M_2(\xi)\}\{M_2(\xi)\}^T d\xi]\{\delta_n\}$$

(2.70)

$$\delta(U_{f3})_n = -K_v(\frac{n\pi}{L})^2(\frac{2}{s})L[\int_{-1}^{1}\{M_0(\xi)\}\{M_2(\xi)\}^T d\xi]\{\delta_n\} \tag{2.71}$$

$$\delta(U_{f4})_n = 2K_G(\frac{n\pi}{L})^2(\frac{s}{2}L)[\int_{-1}^{1}\{M_1(\xi)\}\{M_1(\xi)\}^T d\xi]\{\delta_n\} \tag{2.72}$$

$$\delta(U_{f5})_n = \frac{D_x}{2}(\frac{n\pi}{L})^2\frac{s}{2}L[\int_{-1}^{1}\{M_3(\xi)\}\{M_3(\xi)\}^T d\xi]\{\delta_n\} \tag{2.73}$$

$$\delta(U_{f6})_n = \frac{D_y}{2}\frac{2}{s}L[\int_{-1}^{1}\{M_6(\xi)\}\{M_6(\xi)\}^T d\xi]\{\delta_n\} \tag{2.74}$$

$$\delta(U_{f7})_n = D_v(\frac{n\pi}{L})L[\int_{-1}^{1}\{M_3(\xi)\}\{M_6(\xi)\}^T d\xi]\{\delta_n\} \tag{2.75}$$

$$\begin{aligned}\delta(U_{f8})_n = & \frac{D_G}{2}(\frac{s}{2})L[\int_{-1}^{1}(\frac{2}{s})^2\{M_4(\xi)\}\{M_4(\xi)\}^T d\xi + \int_{-1}^{1}(\frac{n\pi}{L})^2\{M_5(\xi)\}\{M_5(\xi)\}^T d\xi \\ & + \int_{-1}^{1}(\frac{n\pi}{L})\frac{2}{s}\{M_5(\xi)\}\{M_4(\xi)\}^T d\xi + \int_{-1}^{1}(\frac{n\pi}{L})\frac{2}{s}\{M_4(\xi)\}\{M_5(\xi)\}^T d\xi]\{\delta_n\}\end{aligned} \tag{2.76}$$

$$\sum_{1=1}^{4} \delta(U_{ji})_n = \frac{EI_y}{2} W_{4n} (\frac{n\pi}{L})^4 L + \frac{EI_z}{2} V_{4n} (\frac{n\pi}{L})^4 L + \frac{EA}{2} U_{4n} (\frac{n\pi}{L})^2 L + \frac{GI_t}{2} \theta_{4n} (\frac{n\pi}{L})^2 L \tag{2.77}$$

$$\sum_{1=1}^{3} \delta(U_{Ni})_n = \frac{L}{2e} \{k_x [X][X]^T + k_y [Y][Y]^T + \frac{k_\theta}{S} [\Theta][\Theta]^T\} \{\delta_n\} \tag{2.78}$$

$$[X] = [\{e_7\} - \{e_{11}\} - \{e_{10}\}(H + d)] \tag{2.79}$$

$$[Y] = [\{e_8\} - \{e_9\} \frac{d}{2S} - \{e_{12}\} - \{e_{13}\} \frac{H}{2S}] \tag{2.80}$$

$$[\Theta] = [\{e_9\} - \{e_{13}\}] \tag{2.81}$$

2.3.2 Stiffness contribution from one joint element

Because there are non-conservative forces in the joint element, the corresponding stiffness contribution is obtained by using the principle of virtual work.

As shown in the previous section, the internal virtual work done by the spring forces in the joint element is:

$$(W_i^*)^s = \sum_{i=1}^{2N_s} \sum_{n=1}^{N} \sum_{m=1}^{N} (\{\delta_n^J\}^*)^T [B_n]^T [D][B_m] \{\delta_m^J\} \tag{2.82}$$

Since $\{\delta_n^J\}^*$ is an arbitrary nodal displacement the stiffness contribution from the joint element corresponding to the nth and m^{th} terms in Fourier series is:

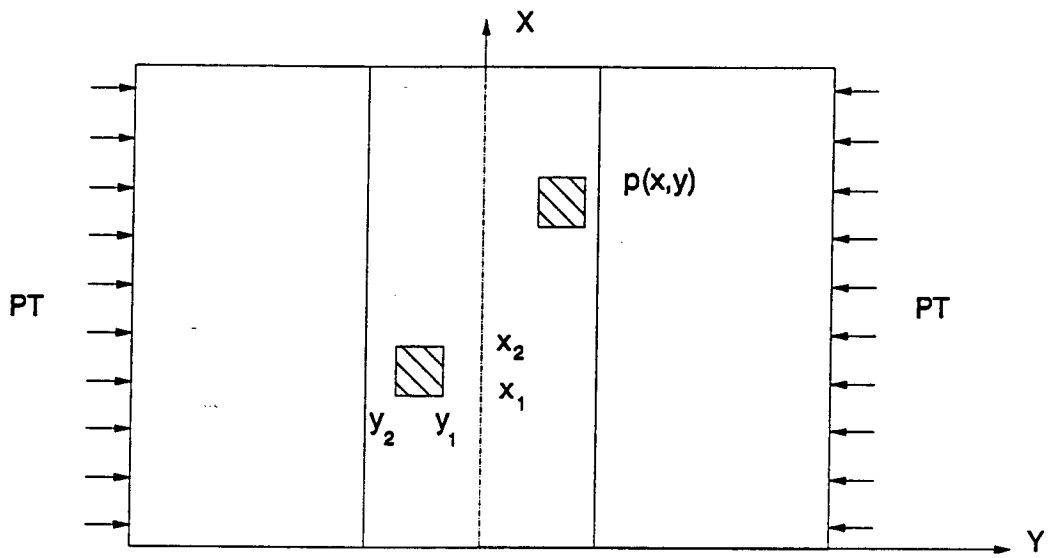

Figure 2.5: The Vechicle and Post-tensioning Load

$$BK[n,m] = \sum_{i=1}^{2N_s} [B_n]^T [D][B_m] \tag{2.83}$$

$BK[n,m]$ is a 8 x 8 symmetric matrix, producing coupling between the Fourier terms. This coupling is reduced (i.e. $BK[n,m]$ approaches [0] if $n \neq m$) when N_s is large and all springs are elastic, since such limit approaches the orthogonality situation among the trigonometric shape functions.

2.3.3 Consistent load vectors

Two kinds of loading are shown in Figure2.5.

Vehicle wheel load

Under a virtual displacement $w^*(x,y)$, the potential of the vehicle wheel load p(x,y) is

$$U_l = \int_{x_1}^{x_2} \int_{y_1}^{y_2} \{w^*(x,y)\}^T \{p(x,y)\} dxdy$$

$$= \int_{x_1}^{x_2}\int_{y_1}^{y_2}\{\sum_{n=1}^{N}\{M_0(\xi)\}^T\{\delta_n\}^*\}^T\{p(x,y)\}sin(\frac{n\pi x}{L})dxdy \tag{2.84}$$

From the definition of the consistent load we have

$$\begin{aligned}\sum_{n=1}^{N}\{\{\delta_n\}^*\}^T\{R_n\} &= \int_{x_1}^{x_2}\int_{y_1}^{y_2}\{w^*(x,y)\}^T\{p(x,y)\}dxdy \\ &= \int_{x_1}^{x_2}\int_{y_1}^{y_2}\{\sum_{n=1}^{N}\{\{\delta_n\}^*\}^T\{M_0(\xi)\}\{p(x,y)\}sin(\frac{n\pi x}{L})dxdy\end{aligned} \tag{2.85}$$

Then:

$$\{R_n\} = \int_{x_1}^{x_2}\int_{y_1}^{y_2}\{M_0(\xi)\}\{p(x,y)\}sin(\frac{n\pi x}{L})dxdy \tag{2.86}$$

where: $\{R_n\}$ = consistent load corresponding to the nth term in the Fourier series. If $p(x,y) = P$, a constant uniformly distributed load over the patch,

$$\begin{aligned}\{R_n\} &= \frac{P\cdot s}{2}\int_{x_1}^{x_2}\int_{\xi_1}^{\xi_2}\{M_0(\xi)\}sin(\frac{n\pi x}{L})dxd\xi \\ &= \frac{P\cdot s}{2}\frac{L}{n\pi}\{cos(\frac{n\pi x_1}{L}) - cos(\frac{n\pi x_2}{L})\}\int_{\xi_1}^{\xi_2}\{M_0(\xi)\}d\xi\end{aligned} \tag{2.87}$$

Where:

$$\xi_1 = \frac{2y_1}{s}; \quad \xi_2 = \frac{2y_2}{s}$$

Post-tensioning load

The individual concentrated post-tensioning load is assumed to be applied, respectively, at node 1 and node 3 of the first and last T-beams. Under an arbitrary displacement $v^*(x,y)$, the potential of the post-tensioning load $PT(x_i)$ is

$$U_{PT} = \sum_{i=1}^{NT}\{v^*(x,y)\}^T\{PT(x_i)\} \tag{2.88}$$

From the definition of the consistent load we have :

$$\sum_{n=1}^{N}\{\{\delta_n\}^*\}^T\{R_n\} = \sum_{n=1}^{N}\{\{\delta_n\}^*\}^T\{M_5(\xi)\}\sum_{i=1}^{NT}PT(x_i)sin(\frac{n\pi x_i}{L}) \tag{2.89}$$

$$\{R_n\}_5 = \sum_{i=1}^{NT} sin(\frac{n\pi x_i}{L})PT(x_i) \tag{2.90}$$

$$\{R_n\}_{18} = -\sum_{i=1}^{NT} sin(\frac{n\pi x_i}{L})PT(x_i) \tag{2.91}$$

where:

$PT(x_i)$ = the value of the ith pair of post - tensioning forces;

NT = the total number of the post-tensioning forces;

x_i = the location of the i-th post-tensioning force.

2.3.4 System of equations corresponding to one T-beam (Element Matrix)

The system of equations corresponding to one T-beam element has the following form:

$$[AK^e]\{\delta^e\} = \{R^e\} \tag{2.92}$$

where:

$$[AK^e] = \begin{bmatrix} [AK(1,1)] & [0] & \dots & [0] \\ [0] & [AK(2,2)] & \dots & [0] \\ \dots & \dots & \dots & \dots \\ [0] & [0] & \dots & [AK(N,N)] \end{bmatrix} \tag{2.93}$$

$$\{\delta^e\} = \begin{Bmatrix} \{\delta_1^e\} \\ \{\delta_2^e\} \\ \vdots \\ \{\delta_N^e\} \end{Bmatrix} \tag{2.94}$$

$$\{R^e\} = \begin{Bmatrix} \{R_1^e\} \\ \{R_2^e\} \\ \vdots \\ \{R_N^e\} \end{Bmatrix} \tag{2.95}$$

Each submatrix $AK[n,n]$ is a 19 x 19 symmetric square matrix. N is the number of items in the Fourier series. $\{\delta_n^e\}$ and $\{R_n^e\}$ ($n = 1, 2 \ldots N$) are the 19 x 1 vectors.

2.4 Global Equations and Solution Method

The characteristics of the global equations and the solution strategy will be discussed with an example, using only two terms in the Fourier series and three T-beams (NJT=3).

2.4.1 Characteristics of the global equation

The form of the global equations is shown in Figure 2.6 and Equation 2.96:

$$\begin{bmatrix} [GK(1,1)] & [GK(2,1)] \\ [GK(2,1)] & [GK(2,2)] \end{bmatrix} \begin{Bmatrix} \{U_1\} \\ \{U_2\} \end{Bmatrix} = \begin{Bmatrix} \{P_1\} \\ \{P_2\} \end{Bmatrix} \tag{2.96}$$

$AK^1(1,1)$ is the stiffness contribution from the T-beam element 1 associated with the first term of the Fourier series. As mentioned in the previous section, it is a 19 x 19 symmetric matrix, as are each of the other $AK^i(n,n)$ (n = 1, 2) matrices. $BK^i(n,m)$ is the stiffness contribution from the joint element i associated with the n-th and m-th terms in Fourier series. It is a 8 x 8 symmetric matrix.

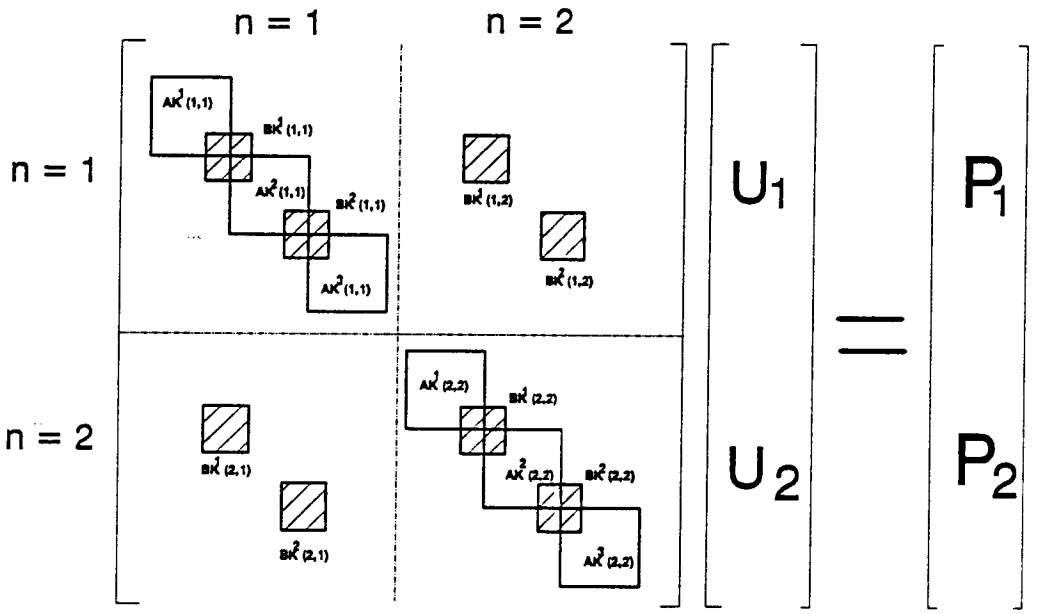

Figure 2.6: The Global Equation System

$GK(n,n)(n=1,2)$ is the $(NJT*19)^2$ symmetric banded matrix with a band width of 19 made up of contributions from the $AK(n,n)$ and $BK(n,n)$; $GK(1,2)$ and $GK(2,1)$ only have the contributions from the joint elements. $\{U_n\}$and $\{P_n\}$ are the (NJT * 19) x 1 displacement vector and consistent load vector associated with the nth term of the Fourier series

2.4.2 The incremental procedure

The incremental method [15] is used to solve the non-linear global equations. The initial values play a very important role in the non-linear analysis iteration method. The

incremental method solves the global equations by replacing the solution to

$[G(U)]\{U\} = \{P\}$

by successive solutions of

$[G(U)_i]\{\Delta U_i\} = \{\Delta P_i\}$

The final solution is

$\{U\} = \sum_{i=1}^{j}\{\Delta U_i\}$

Where:

$\{\Delta U_i\}$ = the incremental displacement of each step.

$\{\Delta P_i\}$ = the incremental load

The initial value used in order to get $\{U_j\}$ is the solution $\{U_{j-1}\}$ in the previous step. With in each step, the global stiffness matrix must be updated according to the current displacement. The final solution is the summation of all displacement increments. The process is illustrated in Figure 2.7.

2.4.3 Newton-Raphson method

From the Figure 2.7 we could note that the more the number of steps, the more accurate the solution is.

In order to decrease the error within each incremental load step, the Newton-Raphson method has been used in the PTB program. This method is illustrated in the Figure 2.8. The final solution in each incremental step $\{\Delta U_i\}$ is obtained when the Newton-Raphson method converges. Thus,

$$\{\Delta U_i\} = \sum_{k=1}^{l}\{\Delta u_k\}$$

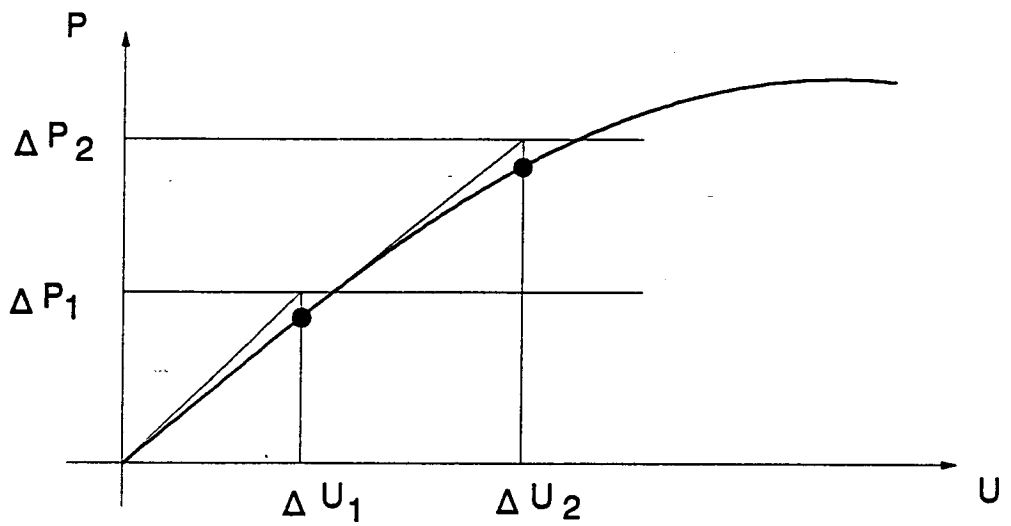

Figure 2.7: The Incremental Method

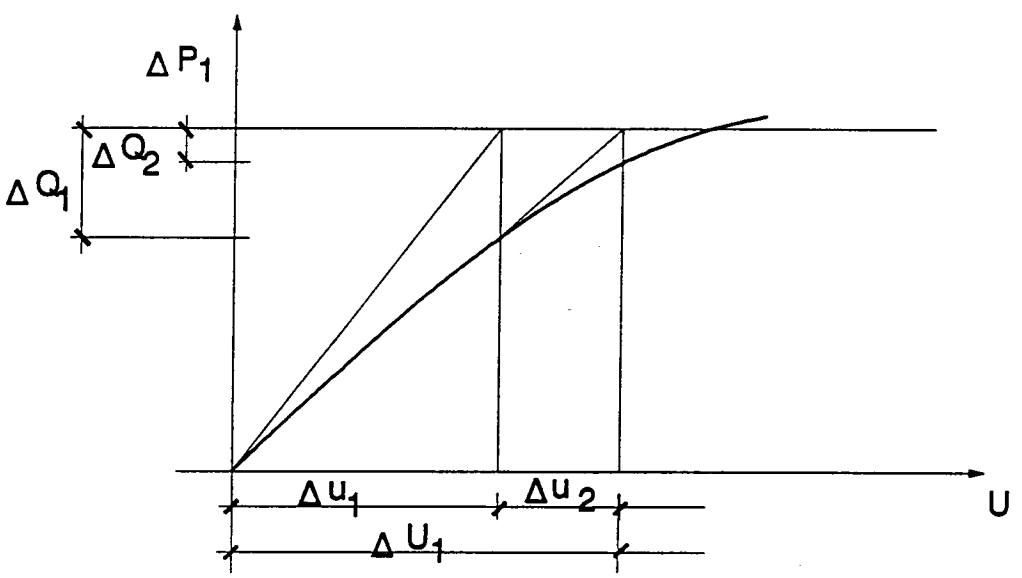

Figure 2.8: Newton-Raphson Method

$$[G(U)]_t\{\Delta u_k\} = \{\Delta Q_k\} \tag{2.97}$$

$$\|\{\Delta u_k\}\|_2 < \epsilon_{kl}\|\{u_{k-1}\}\|_2$$

where:

$[G(U)]_t$ = the global tangent stiffness matrix which must be updated to the current displacements;

$\{\Delta Q_k\}$ = imbalance load vector;

ϵ_{kl} = a tolerance;

$\{u_{k-1}\} = \sum_{i=1}^{k-1}\{\Delta u_i\}$;

$\|\{u_k\}\|_2 = \{\sum_{i=1} u_{ki}^2\}^{1/2}$ the Euclidean norm of the vector $\{u_k\}$.

The derivations of the tangent stiffness matrix $[G(U)]_t$ and imbalance load vector $\{\Delta Q_k\}$ are expressed below.

<u>At the element level</u>

$$[K(u)]\{u\} = \{p\} \tag{2.98}$$

then

$$\{R\} = \{p\} - [K(u)]\{u\} \tag{2.99}$$

To guess $\{u_{i-1}\}$, we get a residual force vector

$$\{R^{i-1}\} = \{p\} - [K(u_{i-1})]\{u_{i-1}\} \neq 0 \tag{2.100}$$

We look for $\{u_k\}$ and make $\{R_k\}$ equal zero

$$\{u_k\} = \{u_{k-1}\} + \{\Delta u_k\} \tag{2.101}$$

$$\begin{aligned}\{R_k\} &= \{R(u_{k-1} + \Delta u_k)\} \\ &= \{R(u_k)\} \cong 0 \end{aligned} \tag{2.102}$$

Expand $\{R_k\}$ in Taylor series in the neighbourhood of $\{u_k\}$ and only take the first two terms.

$$\{R(u_{k-1} + \Delta u_k)\} = \{R(u_{k-1})\} + \frac{\partial\{R\}}{\partial\{u\}}|_{\{u_{k-1}\}} \cdot \{\Delta u_k\} = \{0\} \tag{2.103}$$

$$\begin{aligned}-\frac{\partial\{R\}}{\partial\{u\}}|_{\{u_{k-1}\}} \cdot \{\Delta u_k\} &= \{R(u_{k-1})\} \\ &= \{p\} - [K(u_{k-1})]\{u_{k-1}\} \end{aligned} \tag{2.104}$$

where:

$$-\frac{\partial\{R\}}{\partial\{u\}}|_{\{u_{k-1}\}} = [g(u)]_t$$

$[g(u)]_t$ is the element tangent stiffness matrix corresponding to the $\{u_{k-1}\}$ and $\{u_{k-1}\}$ is the current displacement.

$$\{p\} - [K(u_{k-1})]\{u_{k-1}\} = \{q(u)\}$$

$\{q(u)\}$ is the imbalance load vector corresponding to displacement $\{u_{k-1}\}$ at the element level.

<u>At the global level</u>

Assemble all element tangent stiffness matrices $[g(u)]_t$ and imbalance load vectors $\{q(u)\}$by conventional finite element method, we get the global tangent stiffness matrix $[G(U)]_t$ and the global imbalance load vector $\{\Delta Q_k\}$.

2.4.4 Jacobi iteration method

Within each iteration of the Newton Raphson method, the Jacobi iteration method is used to solve the global system of Equation 2.97. This avoids storing the entire global matrix, requiring less computer memory . If the diagonal matrices are dominant, the rate of the convergence of this method is very high. The procedure can be written as follows:

$$\{\Delta u_k\}_m^i = [GK(m,m)]_t^{-1}\{\{\Delta Q_k\}_m - \sum_{n=1}^{N}[GK(m,n)_t\{\Delta u_k\}_n^{i-1}\} \qquad (n \neq m) \quad (2.105)$$

with starting vector

$$\{\Delta u_k\}_m^0 = [GK(m,m)]_t^{-1}\{\Delta Q_k\}_m \qquad (2.106)$$

The iterative procedure is stopped when the following convergence condition is satisfied:

$$\|\{\Delta u_k\}_m^i - \{\Delta u_k\}_m^{i-1}\|_2 < \epsilon\|\{\Delta u_k\}_m^{i-1}\|_2 \qquad (2.107)$$

$$m = 1, 2, \ldots, N$$

where: ϵ is the error tolerance (which could be .001 for example).

Theory presented in this Chapter has been incorporated into computer program PTB given in Appendix B.

Chapter 3

FRICTION PARAMETERS FOR THE SPRING MODEL

3.1 The Friction Test

In order to determine the friction characteristics of Parallam, an experiment was conducted at MacMillan Bloedel Limited Research Centre. Four kinds of surface textures were studied:

- wet and preservative treated,
- dry and preservative treated,
- wet and untreated,
- dry and untreated.

The test setup is shown in Figure 3.1.

The dimensions of the top specimen were 63.5mm x 63.5mm x 38mm and the size of the bottom specimen was 88.9mm x 88.9 x 38mm. Both were cut from rough-sawn planks. It should be pointed out that the surface of the preservative treated specimens was much rougher due to the chemical treatment process. The specimens classified as 'wet' were soaked in water for 24 hours before test. All test specimens were measured before being soaked in water and weighted just after being taken out of water, and wiped clean of surface water. For each kind of surface texture, both the friction coefficient for the sliding direction perpendicular and parallel to Parallam fibres were determined, as shown in Figure 3.2.

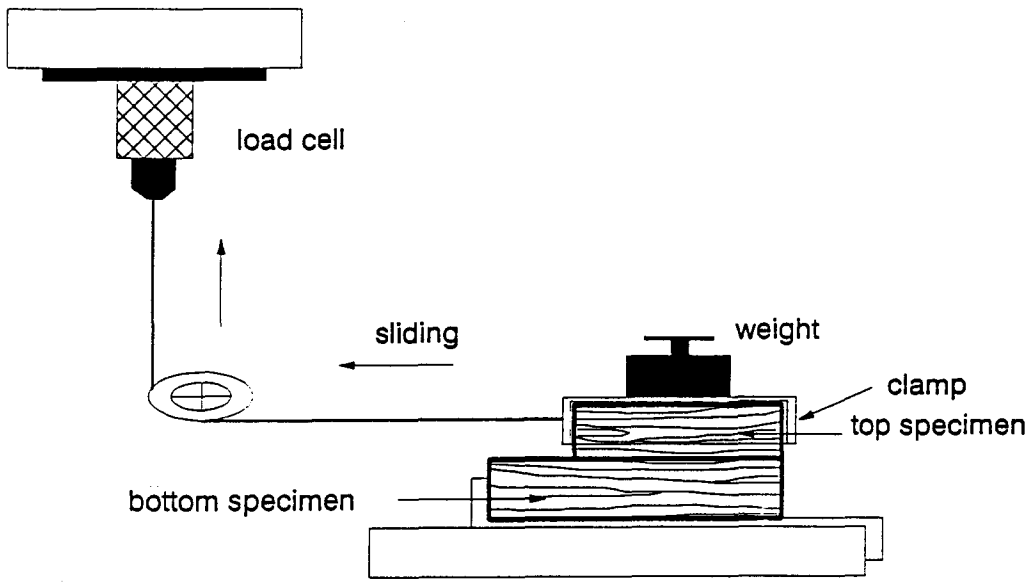

Figure 3.1: The Friction Test Setup

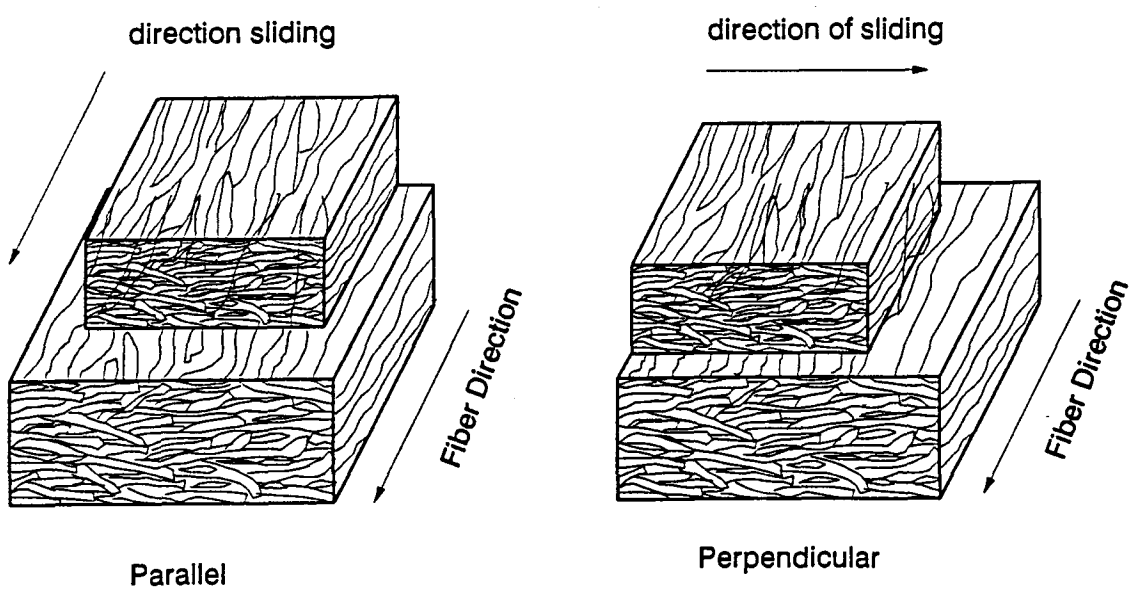

Figure 3.2: Two Kinds of Friction Test

Table 3.1: Data of Friction Test Samples

Specimen Type	Average Weight (gr)	Number of Specimens
Dry, Treated, Parallel	110.99	20
Dry, Treated, Perpendicular	111.16	19
Wet, Treated, Parallel	141.15	17
Wet, Treated, Perpendicular	140.08	14
Dry, Untreated, Parallel	92.36	15
Dry, Untreated, Perpendicular	92.75	12
Wet, Untreated, Parallel	135.18	19
Wet, Untreated, Perpendicular	137.47	12
Weight of the Clamp	109.91	
Applied Weight	5000.0	

Table 3.1 gives the data of the samples used in each type of tests.

In the perpendicular direction test, the sliding direction was perpendicular to the Parallam fibres. In the parallel direction test, the sliding direction was parallel to the fibres.

The force F_H required to produce sliding between the surfaces of the specimens was proportional to the force F_v applied normal to the plane of motion. The ratio is defined as the coefficient of friction.

$$\mu = \frac{F_H}{F_V} \tag{3.1}$$

In all tests, an Instron 4210 testing machine was used to provide a $0.4in/min.$ constant sliding velocity. The horizontal force F_H vs. sliding movement relationship through the test was monitored and recorded, and typical curves are shown in Figure 3.3 to 3.5. From these Figures, it can be seen that the curve of the horizontal force vs. the movement, after sliding, is not smooth, reflecting the stop-and-go induced by surface roughness. The results and statistical data are presented in Table 3.2.

Table 3.2: Statistical Results of the Friction Test

Classified Specimens	μ	σ of μ	C_v of μ	E (N/mm)	σ of E	C_v of E
Dry, Treated, Parallel	.655	.076	.115	16.902	2.895	0.171
Dry, Treated, Perpendicular	.831	.080	.096	17.378	1.922	.111
Wet, Treated, Parallel	.833	.038	.046	12.618	3.197	.254
Wet, Treated, Perpendicular	.878	.059	.068	12.353	3.863	.313
Dry, Untreated, Parallel	.373	.031	.083	11.183	1.751	.157
Dry, Untreated, Perpendicular	.419	.041	.098	10.891	1.992	.183
Wet, Untreated, Parallel	.804	.052	.065	14.900	2.523	.170
Wet, Untreated, Perpendicular	.811	.048	.059	12.339	1.943	.158

μ = friction coefficient (mean);

E = stiffness (initial slope of the F_H vs. displacement curve)(mean);

σ = standard deviation;

C_v = coefficient of variation.

3.2 Spring Model

As previously mentioned, a 'three-dimensional spring' model is assumed in the non-linear analysis and its constitutive relations are shown in Figure 2.4 of Chapter 2. The friction coefficients μ_x and μ_z are directly adopted from the friction testing. The stiffnesses E_x^s and E_z^s ,on the other hand, are derived from the friction testing results using the 'same slip' assumption.

We can idealize the friction test results in Figure 3.6.

In the spring model let the elastic displacement limits in the x and the z-direction be, respectively, Δ_{lim}^x and Δ_{lim}^z . Thus,

$$\Delta_{lim}^x = \frac{\mu_x \sigma_y et}{E_x^s} \tag{3.2}$$

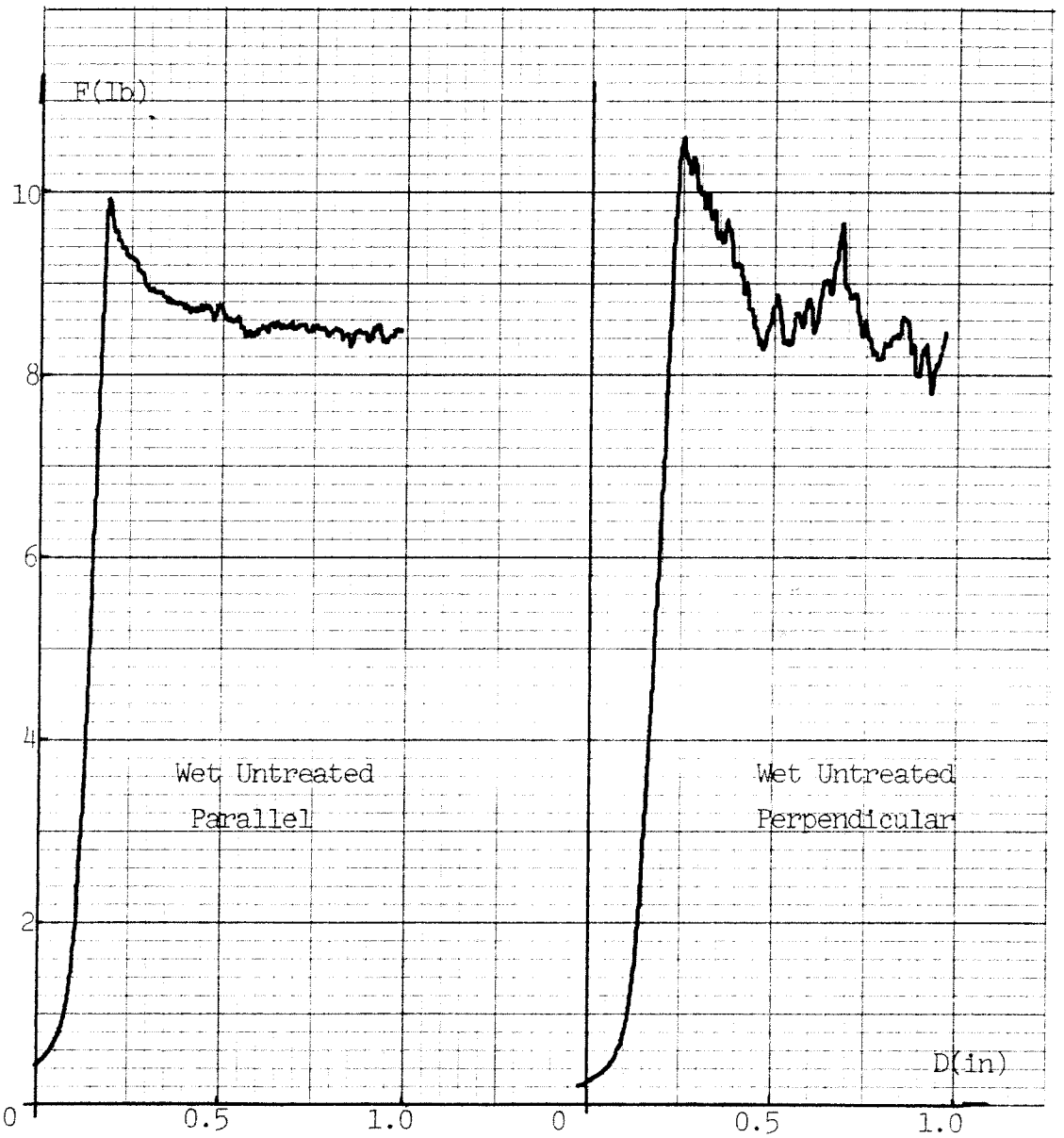

Figure 3.3: Friction Test Recording Curves(1)

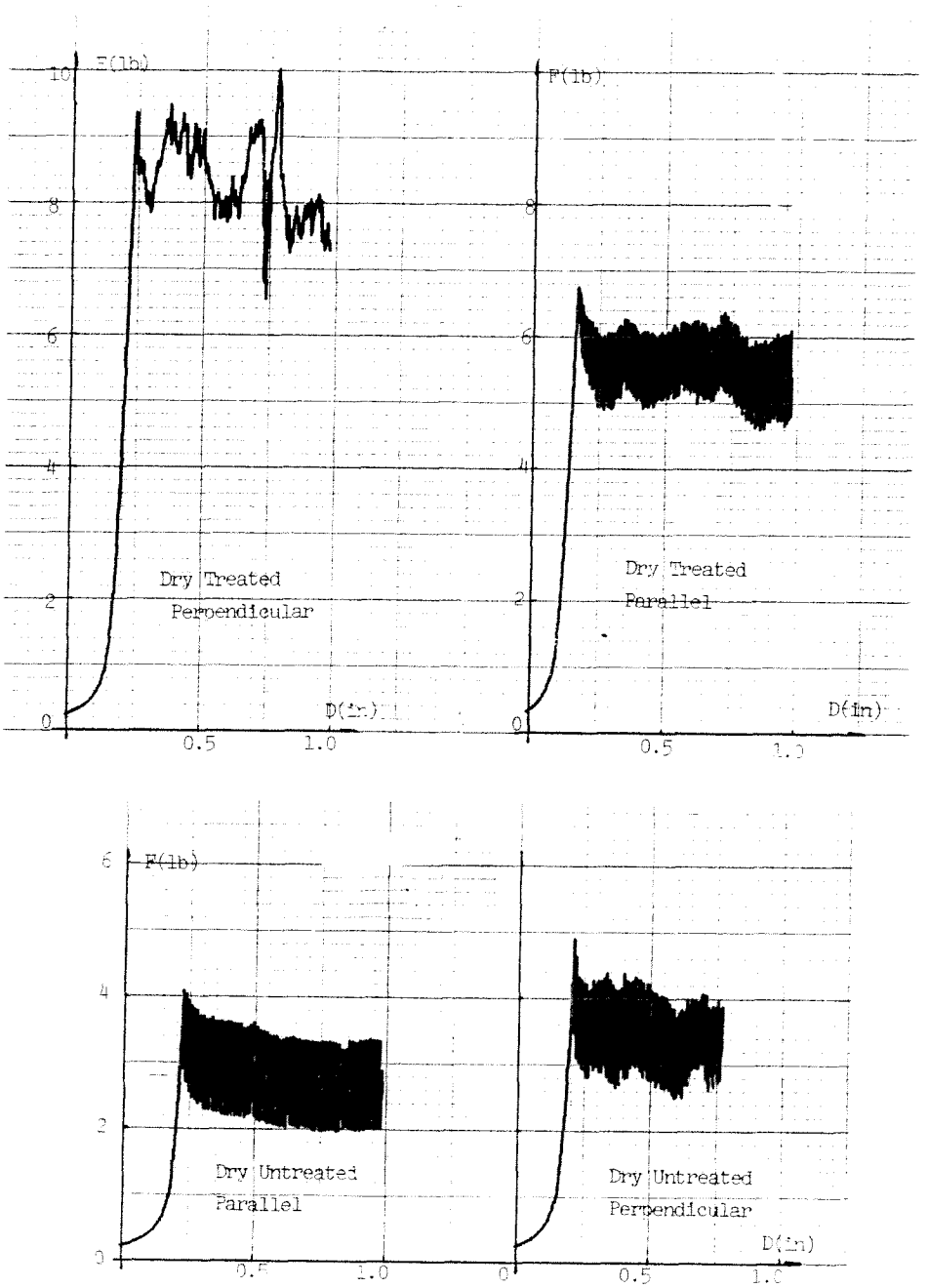

Figure 3.4: Friction Test Recording Curves(2)

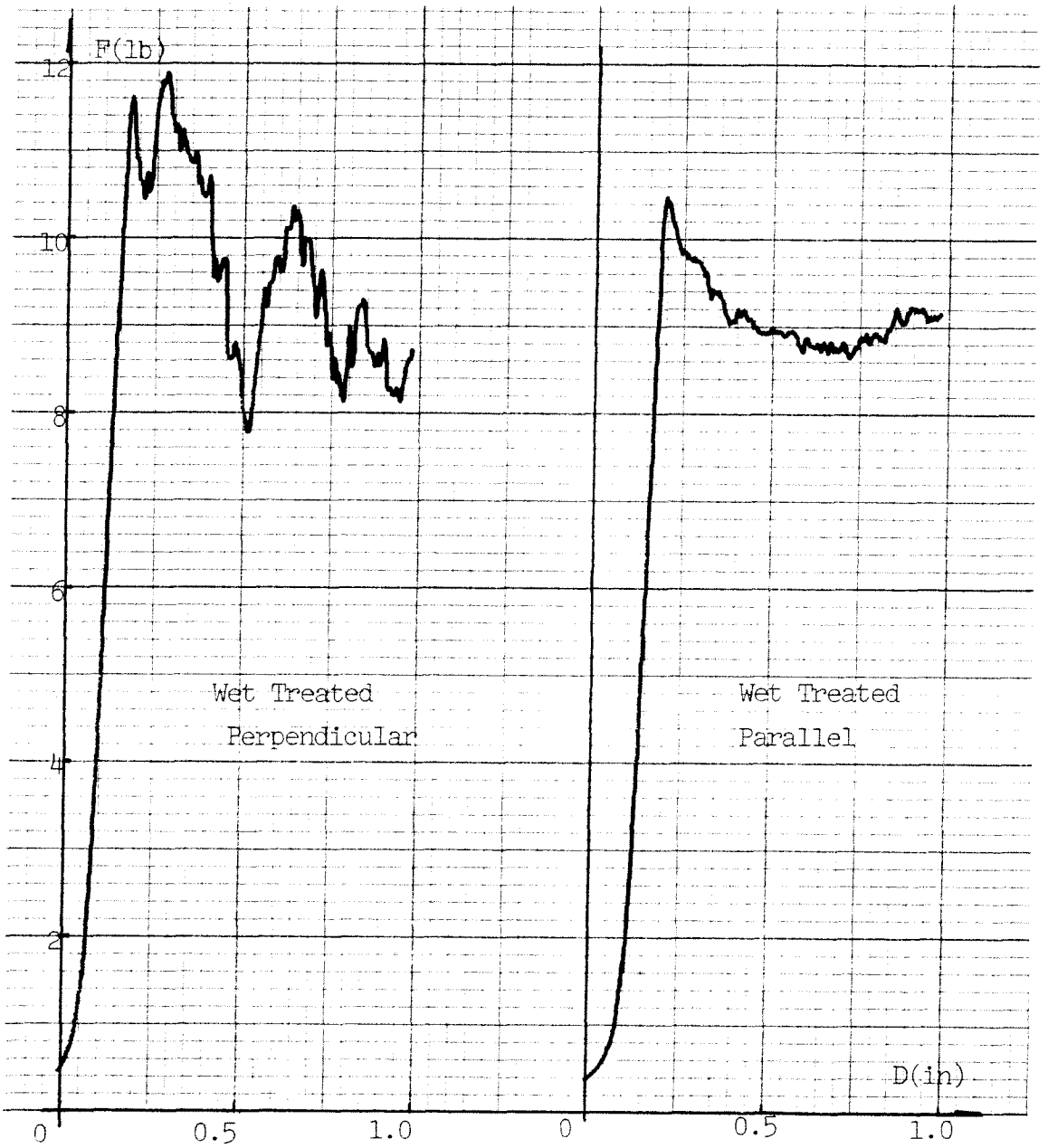

Figure 3.5: Friction Test Recording Curves(3)

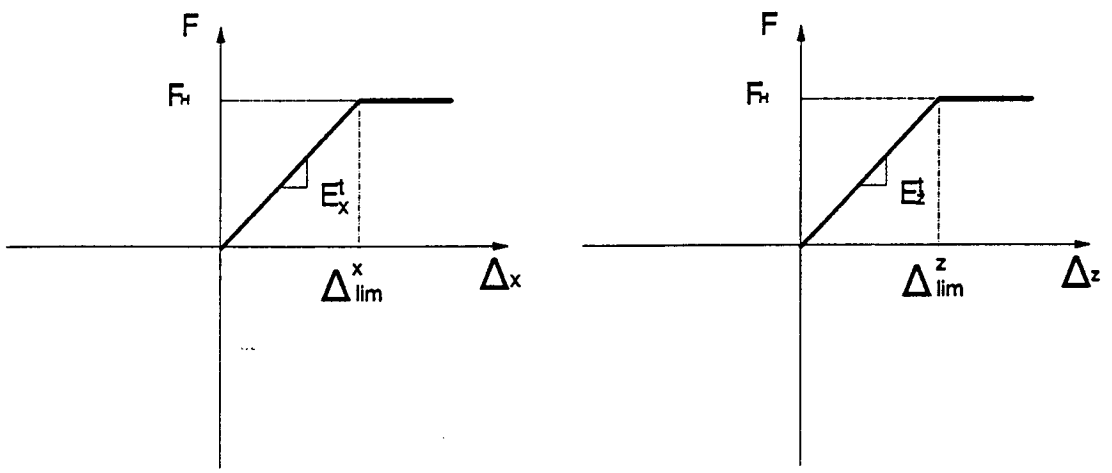

Figure 3.6: Idealized Friction Test Curves

$$\Delta^{z}_{lim} = \frac{\mu_z \sigma_y et}{E^{s}_{z}} \tag{3.3}$$

In the parallel direction of the friction test:

$$\Delta_{lx} = \frac{F_H}{E^{t}_{x}} \tag{3.4}$$

In the perpendicular direction of the friction test:

$$\Delta_{lz} = \frac{F_H}{E^{t}_{z}} \tag{3.5}$$

The 'same slip' assumption implies that

$$\Delta^{x}_{lim} = \Delta_{lx} \tag{3.6}$$

$$\Delta^{z}_{lim} = \Delta_{lz} \tag{3.7}$$

from which,

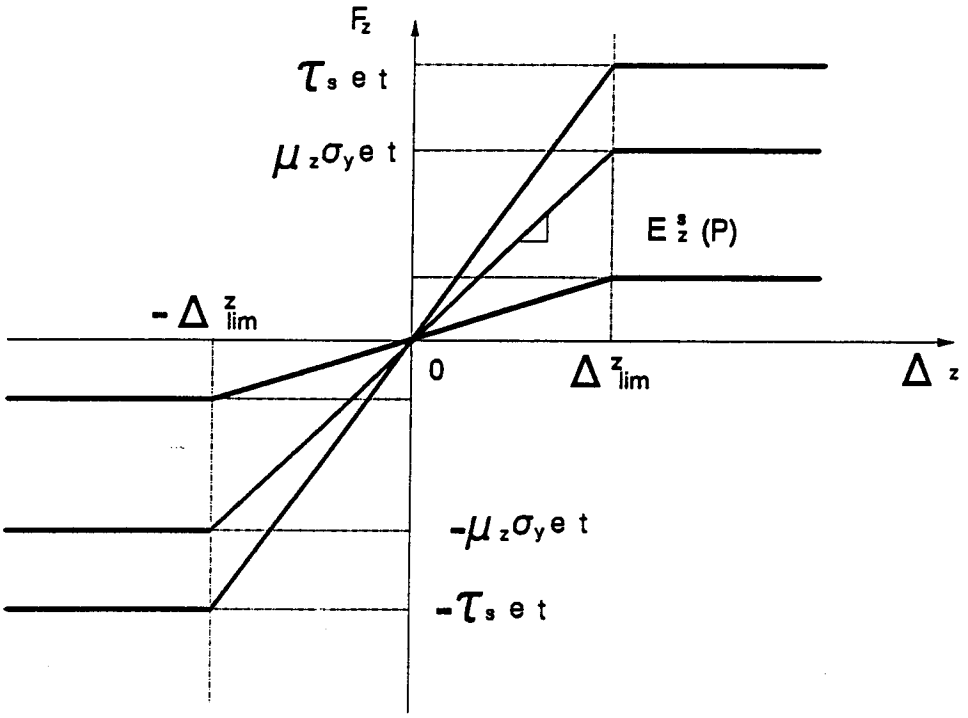

Figure 3.7: Same Slip Assumption

$$E_x^s = \frac{E_x^t \sigma_y et}{F_V} \tag{3.8}$$

$$E_z^s = \frac{E_z^t \sigma_y et}{F_V} \tag{3.9}$$

E_x^s and E_z^s are the stiffnesses used in the 'three dimensional' spring; E_x^t and E_z^t are the stiffnesses obtained from the friction test. The relations between the spring stiffness and the stress σ_y is clearly shown in Figure 3.7. We can note that E_x^s and E_z^s are proportional to the normal stress σ_y, however the maximum friction force in the spring cannot exceed the shear strength of the material $\tau_s et$, where τ_s is the shear strength of the flange and et is effective area of the spring.

Chapter 4

ANALYTICAL RESULTS

4.1 Beam Test

In order to test the spring model described in Chapter 2, a simple beam structural problem, shown in Figure 4.1, is now considered. The structure consists of two built-in beams connected by four springs. At the top, there are one y-direction and one z-direction spring. The other two are assumed in the y and z-directions at the bottom of the beams. The left beam is subjected to one vertical concentrated force at midspan. The properties and the dimensions of this structure are shown in the Table 4.1 The structure was analyzed by a specific program using the same spring model theory, which is used in the PTB program.

When $P \geq 0.0$, this axial load produces tension in both beams. The results given in the Figure 4.2 show the displacements of node 2 and 3 vs. the tensioning force P. The status of the four springs as a function of the post-tensioning force P is given in the Table 4.2

In Table 4.2, F means the force in the spring is beyond the friction limit; E means that the deformation of the spring is within the elastic range, less than the friction limit Δ_{lim}.

From Figure 4.2 and Table4.2, we can note that increasing the post-tensioning force P influenced the status of the springs, with an associated change in load distribution within the structure. Finally, when the P reached $100,000(N)$, the two y-direction springs were

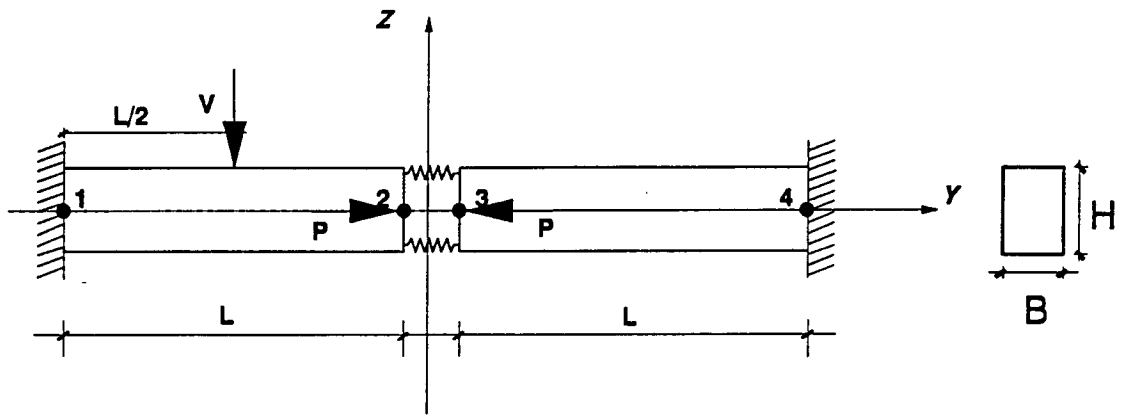

Figure 4.1: Two Cantilever Beam Structure

Table 4.1: Properties of the Cantilever Beam

BEAM	
width of the beam (B)	200 (mm)
depth of the beam (H)	400 (mm)
span of the beam (L)	4000 (mm)
elastic modulus of the beam (E_b)	14000 (MPa)
elastic modulus of the y-dir. spring (E_y)	1.0E10 (MPa)
elastic modulus of the z-dir. spring (E_z)	17.4 (MPa)
friction coefficient (μ_z)	.65
LOADING	
vertical concentrated loading (V)	-20,000 (N)

Table 4.2: Status of the Springs in the Cantilever Beams

STATUS OF THE SPRINGS				
Post Force (N)	y-dir. at top	z-dir. at top	y-dir. at bottom	z-dir. at bottom
0.0	contact	F	open	not active
10	contact	F	open	not active
100	contact	F	open	not active
1,000	contact	F	open	not active
10,000	contact	E	open	not active
100,000	contact	E	contact	E
1000,000	contact	E	contact	E

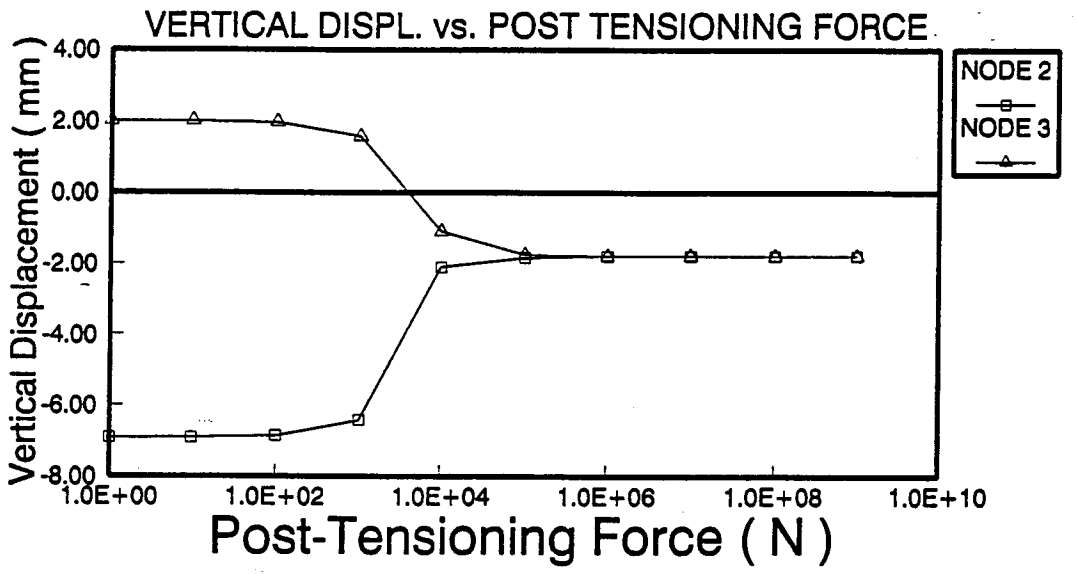

Figure 4.2: Cantilever Beam Structure Displacements

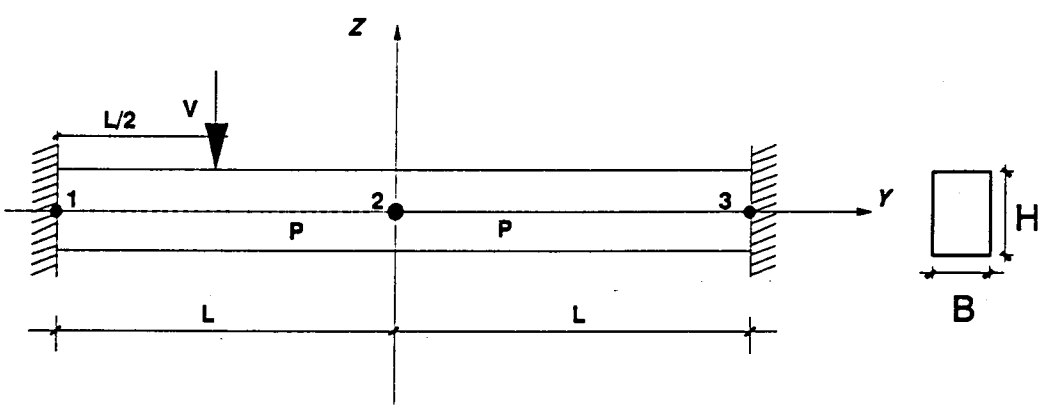

Figure 4.3: Built-in Solid Beams

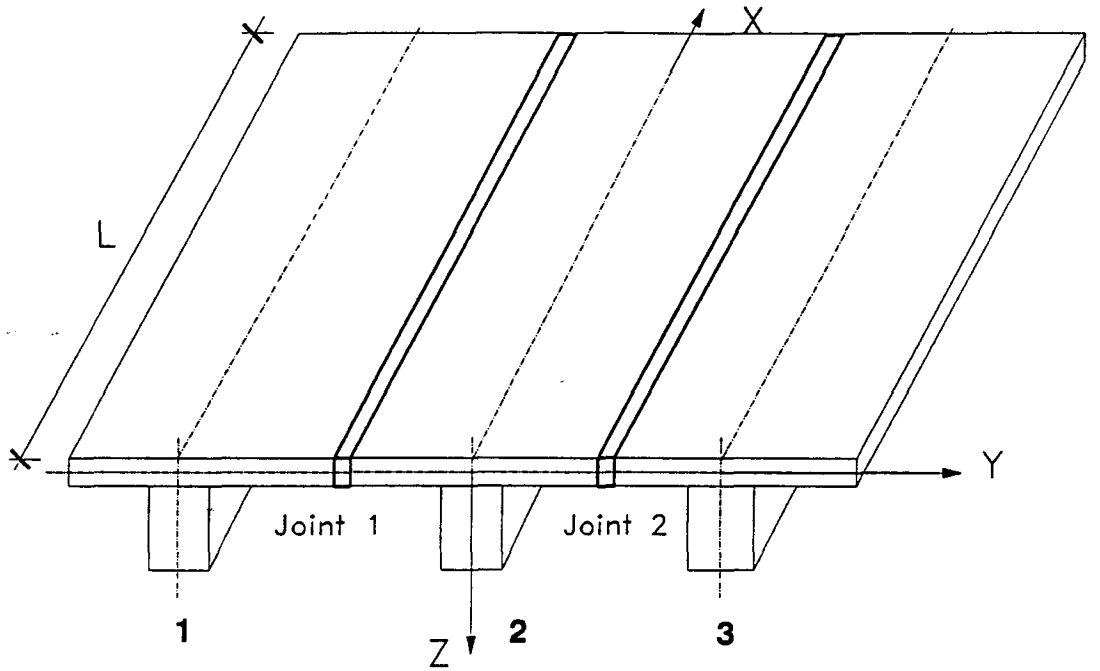

Figure 4.4: Three T-beam Structure

active (full contact between the beams) and the deformations of the two z-direction springs (in terms of relative displacement at the interface of the beams) were all within the elastic deformation limit. When the P reached $100,000(N)$ the displacement of node 2 was decreased by several times in comparison with that for $P = 0.0(N)$. The displacement of node 2 must then be nearly equal to the displacement of node 2 in Figure 4.3. The structure in Figure 4.3 is a solid beam and all its properties are the same as those for the case of Figure 4.2. This was independently verified with a structural analysis of the beam in Figure 4.3.

4.2 T-beam Analysis

The configuration and the other properties of the structure are presented in Figure 4.4 and Table 4.3. The bridge is assumed built with Parallam T-beam (dry, treated conditions).

Since a sine series in the x-direction is used to approximate the displacement w(x,y)

Table 4.3: Properties of T-beam Structure

Parameter	Notation	Value
T-beam span	L	12000 (mm)
T-beam spacing	s	1000 (mm)
web height	H	500 (mm)
web width	B	100 (mm)
the ratio of elastic modulus to shear modulus of the web	REG	17.0
flange height	d	100(mm)
friction coefficient in x-direction	μ_x	0.50
friction coefficient in z-direction	μ_z	0.65
three dim. spring number in one joint element	$2N_s$	42
spring elastic modulus in the x-direction	E_x^t	16.9 (N/mm)
spring elastic modulus in the y-direction	E_y	1.0E10 (N/mm)
spring elastic modulus in the z-direction	E_z^t	17.4 (N/mm)
web elastic modulus in the x-direction	E_{web}^x	14000.0 (MPa)
web elastic modulus in the y-direction	E_{web}^y	1400.0 (MPa)
flange elastic modulus	E_{flange}	14000.0 (MPa)
post-tensioning force spacing		1200 (mm)

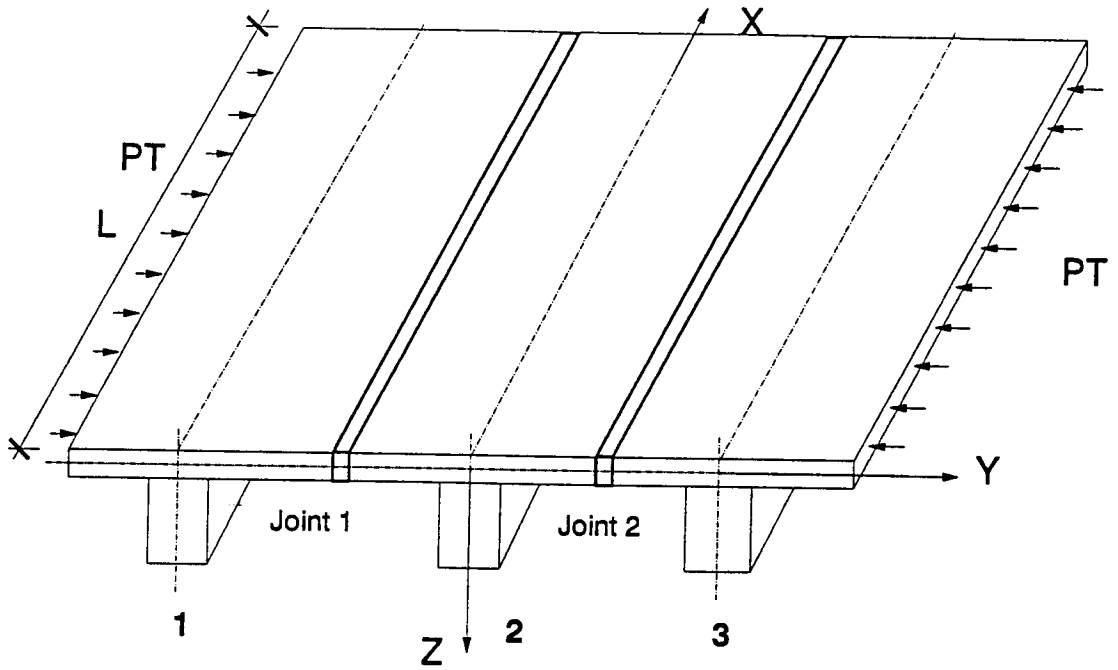

Figure 4.5: Three T-beam Structure with Post-Tensioning Force Only

(deflection) of the structure, simply supported boundary conditions are satisfied at x = 0 and x = L. Other edges are free. The analysis considered five loading cases and was done by running program PTB. Since all cases are symmetric about midspan in the x-direction, four Fourier terms with order 1,3,5 and 7 were chosen in the analysis. The objective was to study the effect of the post-tensioning force in the loading distribution within the structure. The program PTB can give either nonlinear or linear elastic results, the latter implying that all springs keep their initial stiffness throughout the loading. Studying the relative displacement in z-direction between the flanges of adjacent the T-beams constitutes the main objective of this analysis.

4.2.1 Analysis for post-tensioning force only

The structure and loading condition are shown Figure 4.5

Three T-beams were subjected to ten pairs of post-tensioning forces along the span.

Table 4.4: Analytical Results: Post-tensioning Force Only

PTB PROGRAM SAME SLIP (LINEAR)				
POST FORCE (N)	Maximum Displacement (T-beam 1)	Maximum BEND. STRESS (T-beam 1)	Maximum Displacement (T-beam 2)	Maximum BEND. STRESS (T-beam 2)
	(mm)	(MPa)	(mm)	(MPa)
1.00	-0.57952E-05	-0.14474E-05	-0.58064E-05	-0.11604E-05
10,000	-0.57726E-01	-0.14681E-01	-0.58461E-01	-0.11126E-01
PTB PROGRAM SAME SLIP (NON-LINEAR)				
POST FORCE (N)	Maximum Displacement (T-beam 1)	Maximum BEND. STRESS (T-beam 1)	Maximum Displacement (T-beam 2)	Maximum BEND. STRESS (T-beam 2)
	(mm)	(MPa)	(mm)	(MPa)
1.00	-0.57952E-05	-0.14474E-05	-0.58064E-05	-0.11604E-05
10,000	-0.57726E-01	-0.14681E-01	-0.58461E-01	-0.11126E-01

From Table 4.4, we can note that the results from the non-linear analysis and those from the linear analysis are identical. This means all springs were in the elastic range at the different levels of the post-tensioning forces.

Figure 4.6 gives the relative deformations of the joint element 1 in z-direction along the span of the T-beam. The negative deformation of the joint element indicates that the flange of T-beam 2 moved down less than the flange of T-beam 1 did.

4.2.2 Analysis for the one patch of vertical loading

The load case is shown in Figure 4.7. This is a symmetric problem. Along the 12m long span 10 pairs of post-tensioning force were acting. Each pair of the post-tensioning force was equal to PT. The structure carried one patch of vertical loading equal to 500 mm x 300 mm x 0.2 (N/mm^2) = 30,000 (N) at midspan of T-beam 2. For the symmetric

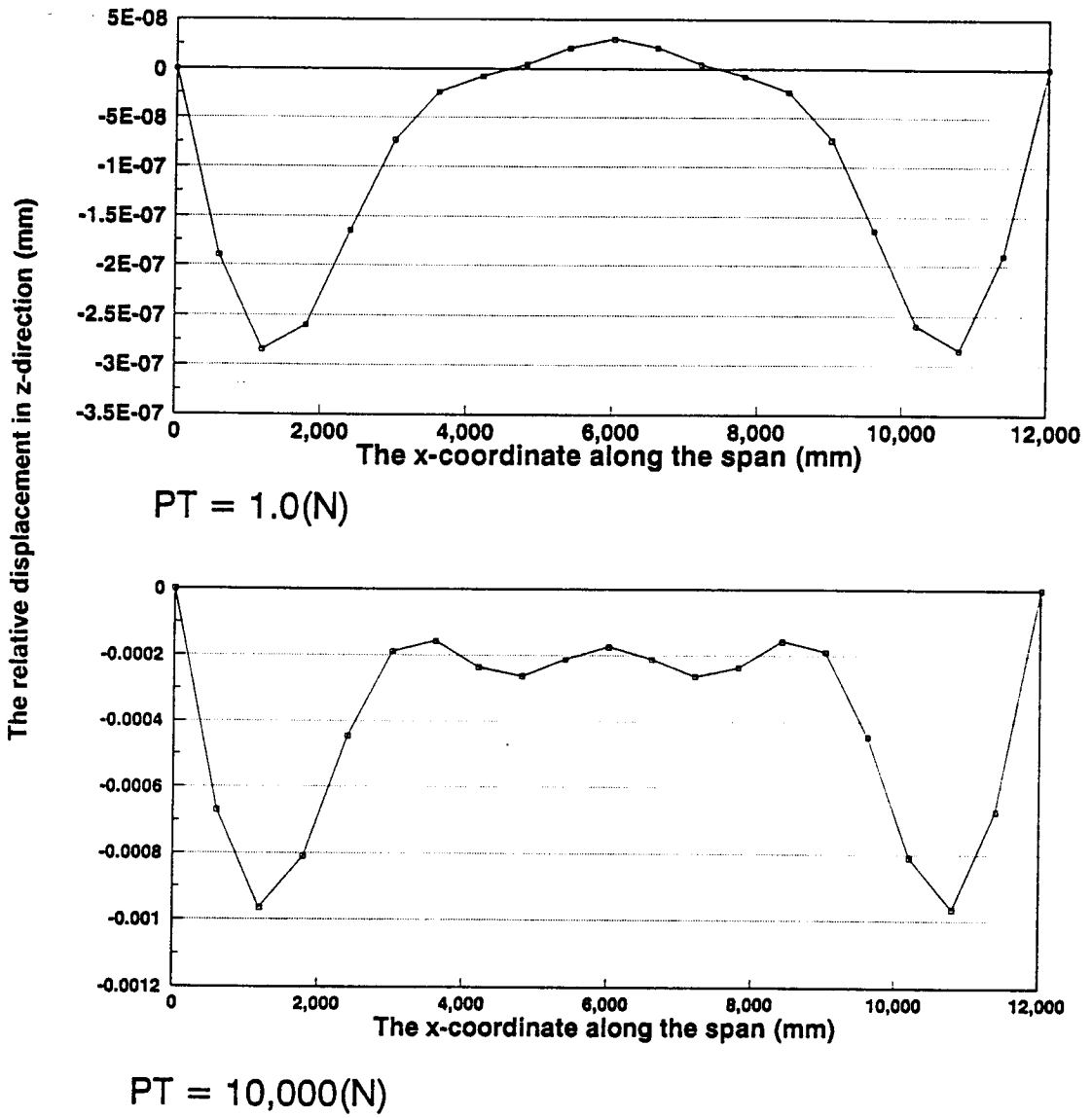

Figure 4.6: Displacements of T-beam Structure under Post-Tensioning Force Only

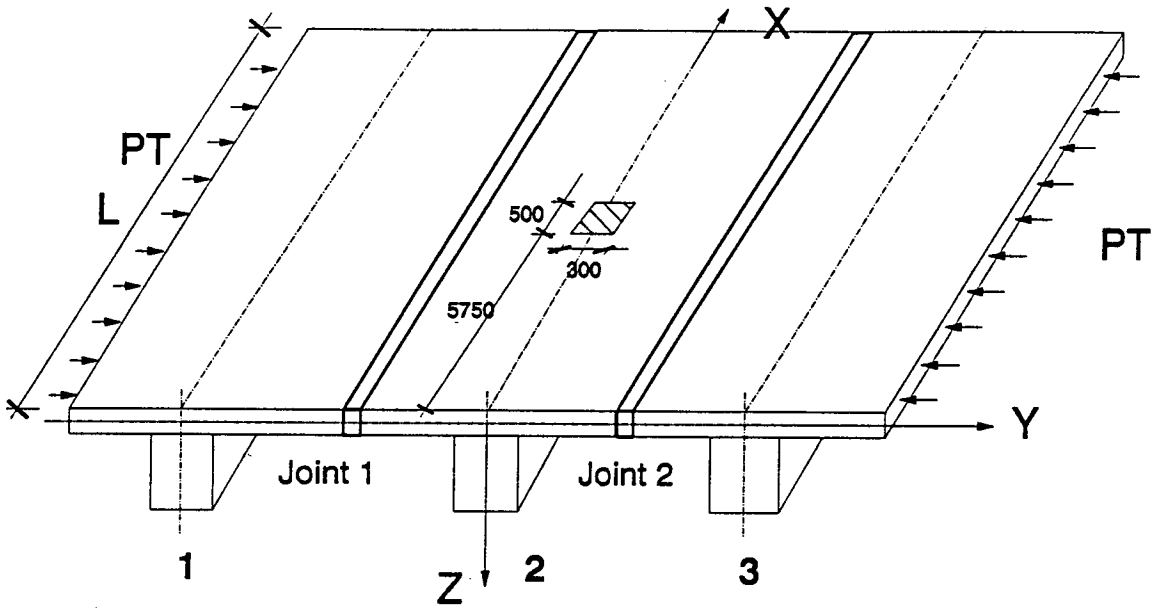

Figure 4.7: T-beam Structure One Patch Loading Case

problem , we only plot the stresses and the displacements of the T-beam 1 and T-beam 2. Figure 4.8 to Figure 4.10 show the effect of the post-tensioning force on, respectively, the maximum bending stresses in the webs and the maximum vertical displacements in beams.

When $PT = 0.0$, the total vertical loading is carried by beam 2 only. The maximum relative displacement between beam 1 and beam 2 (ie. the maximum deformation of the Joint element 1 in the z-direction) was more than 20mm. With the increase in the post-tensioning forces, the link between beam 1 and 2 became tighter and, consequently, the load sharing behaviour of the structure improved dramatically.

When PT approached 10,000 (N), the non-linear analysis results were identical to those from the linear elastic analysis. When PT reached 100,000 (N), the maximum relative displacement, in z-direction, between the flanges of beam 1 and beam 2, was negligible when compared to the 20mm for $PT = 0.0$.

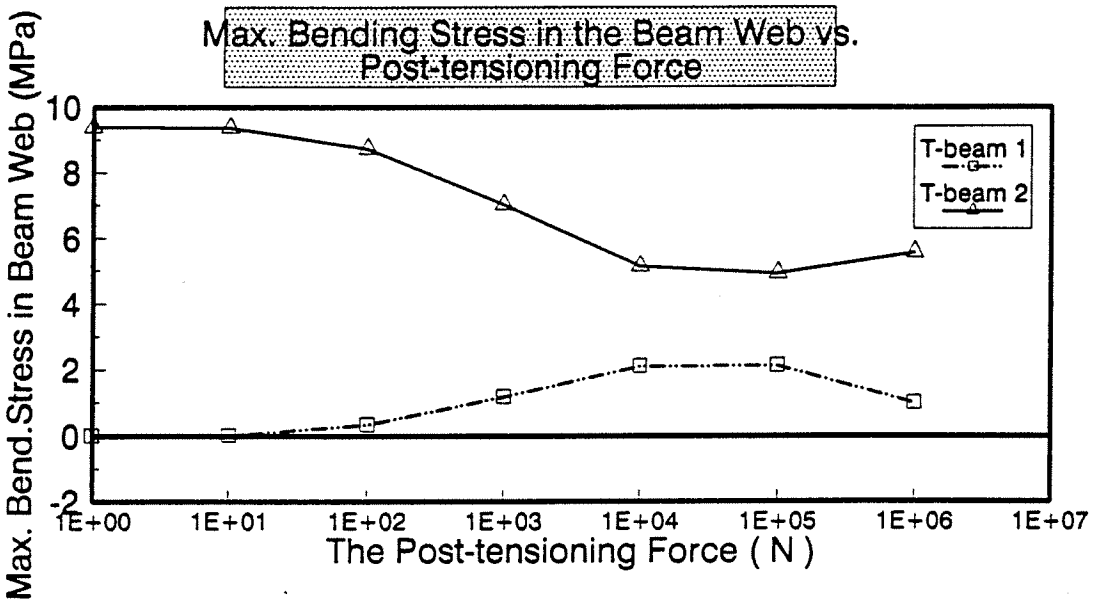

Figure 4.8: Bending Stress of T-beam Structure One Patch Loading Case

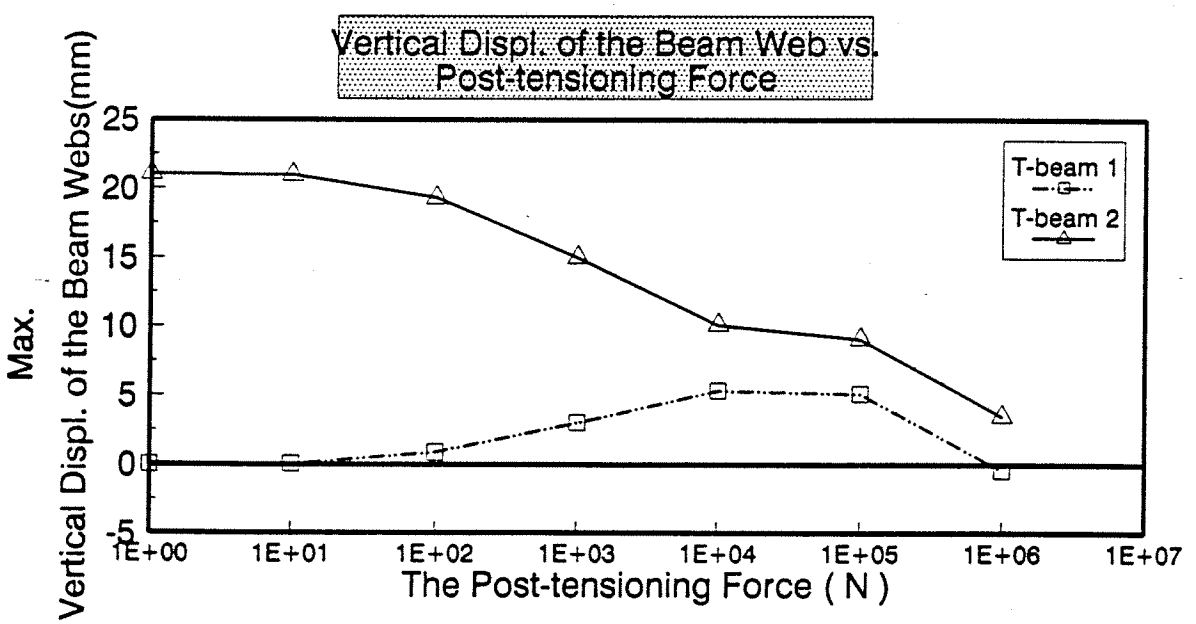

Figure 4.9: Displacements of T-beam Structure One Patch Loading Case

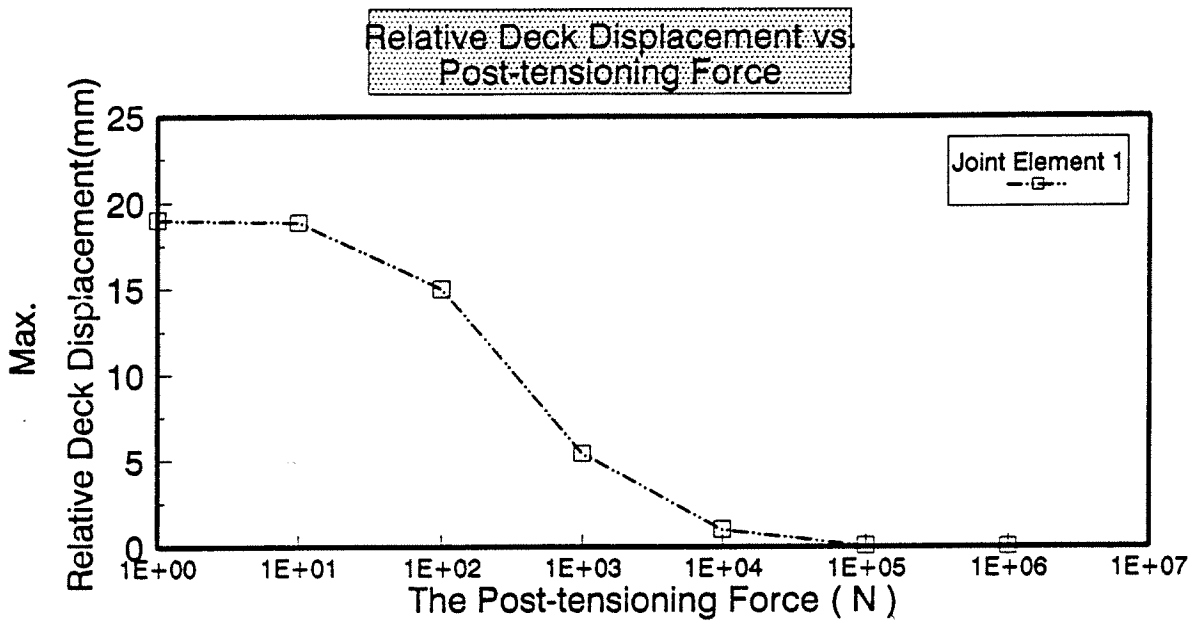

Figure 4.10: Relative Displ. of T-beam Structure One Patch Loading Case

In the example shown in Figure 4.9, upward (negative) deflections of the T-beams can be seen to be developing as the post-tensioning force becomes large. The reason for this behaviour is explained as follows: when the flange of the T-beam subjected to post-tensioning forces in the y-direction, the flange will expand in the x-direction due to Poisson's effect. Since the flange is connected to the T-beam web by the connectors with non-zero stiffnesses, shear forces develop to maintain compatibility. The direction of these forces as shown in Figure 4.11, is such that they cause an upward deflection which, shown in Figure 4.9, becomes more important for post-tensioning forces greater than $1E + 05N$.

Figure 4.12 is the maximum displacements of the T-beams caused only by one patch loading. Those displacements were measured from the upward deflection caused by post-tensioning forces. See Figure 4.11. It is very obvious that the post-tensionging force can improve the loading sharing capacity of the whole structure.

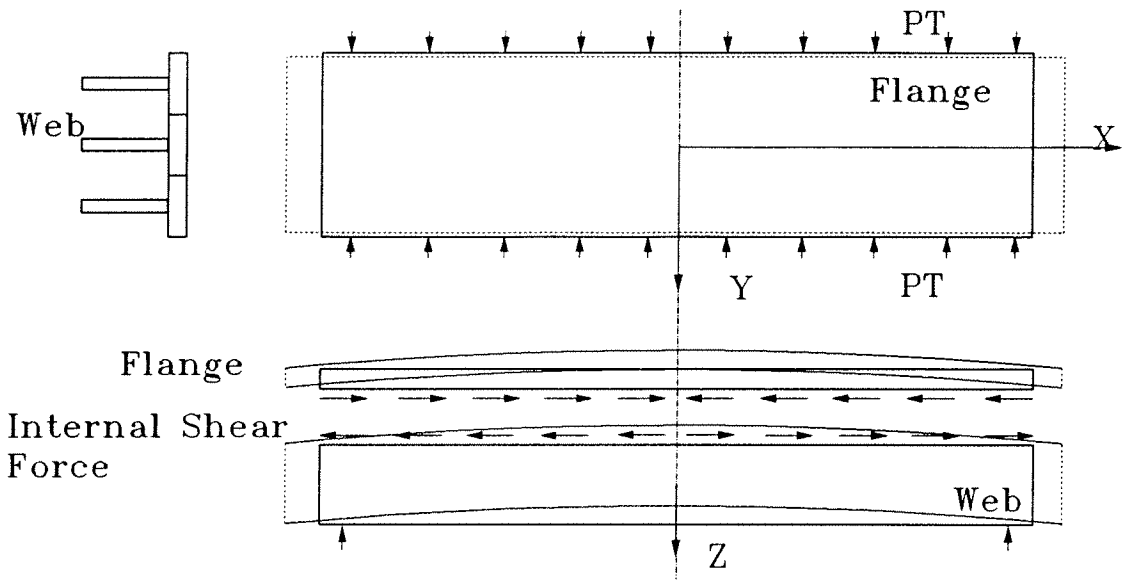

Figure 4.11: Upward Deflection of the T-beam

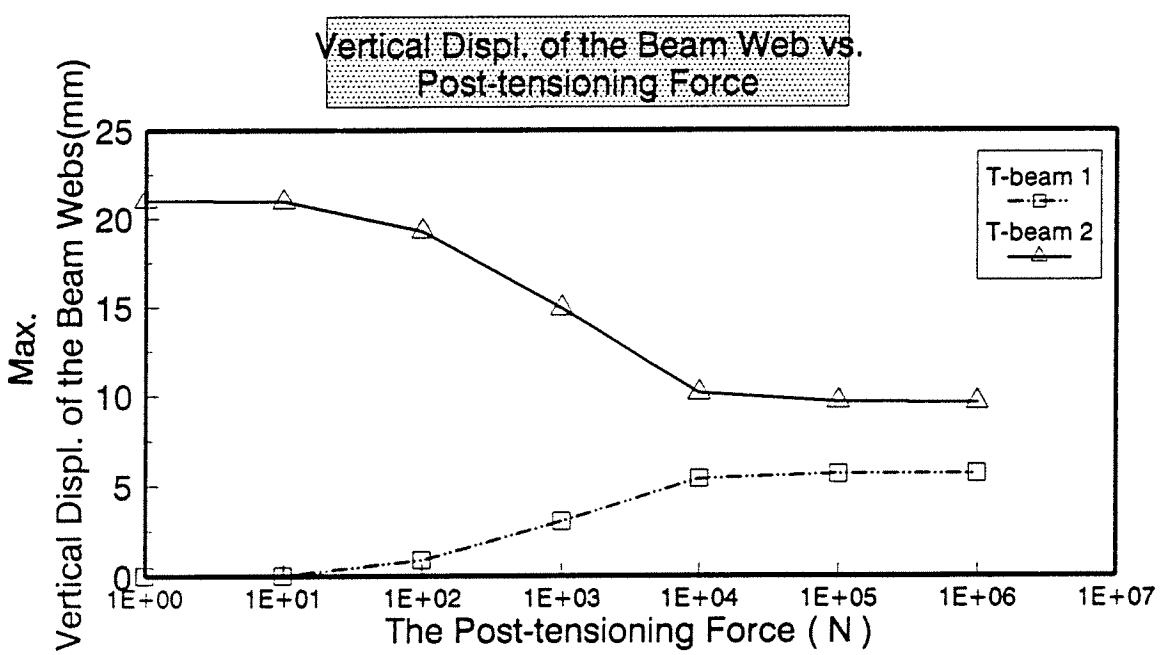

Figure 4.12: Displacements of T-beam under One Patch Loading

4.2.3 Wheel loading analysis

Four patches of vertical loading simulating a vehicle with four wheel were applied to the structure. According to the different locations of the four wheels we have three cases to study.

CASE 1

The wheel loadings (each patch carried 500 mm x 300 mm x 0.1 (N/mm^2) = 15,000(N)) were at the centre lines of the T-beam 1 and T-beam 2 respectively. The separation in x-direction between the two patches was 2000mm. The structure is shown in Figure 4.13.

PTB obtained the displacement and stress plots shown in Figure 4.14 to Figure 4.16. At the beginning (PT = 0.0), the maximum bending stress in beam 1 and beam 2 were the same. All beams acted almost independent of each other, with little load sharing. Beam 3 did not share the wheel loading applied to beam 1 and beam 2. When the post-tensioning forces were increased, the contribution from beam 3 to the sharing of loading increased, producing a corresponding difference between the maximum bending stresses of beam 1 and beam 2.

For the maximum relative displacement between the adjacent flanges of the T-beams, the effect of the post-tensioning force was very obvious. At the beginning, the maximum relative displacement between the beam 1 and beam 2 was very small due to their similar loading and boundary conditions. But the maximum absolute deformation of the joint 2 in z-direction was very large. After the post-tensioning force got to 100,000 (N), the value of the maximum deformation of the joint element 2 in z-direction was negligible in comparison with that obtained at the $PT = 0.0$ as shown in Figure 4.16.

Keeping the post-tensioning force at $PT = 100,000(N)$, the four patches of wheel loading were then moved from $x = 0.0$ to $x = 6000mm$. The Figure 4.17 and Figure 4.18

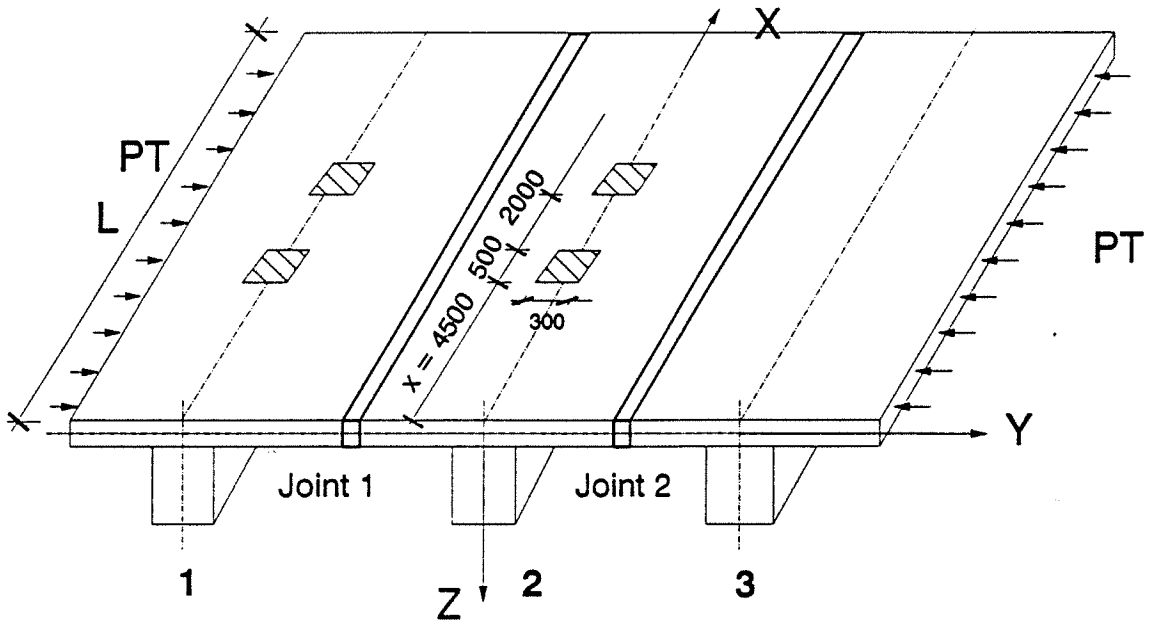

Figure 4.13: T-beam Structure CASE 1

give us the non-linear analytical results from PTB program. When the vehicle moved to midspan, the displacement and the bending stress of the T-beam achieved the peak values.

CASE 2

The four patches of vehicle loading were acting at the edges of T-beam 1 and T-beam 2 as shown Figure 4.19. The deformations in joint elements were correspondingly more than those in CASE 1 at same level of the post-tensioning force. But the trend of the post-tensioning force effect was the same. When PT approached 10,000 (N), the tightness of and load distribution in the structure was improved dramatically. The analytical results are shown from Figure 4.20 to Figure 4.22.

The initial stiffnesses E_x and E_z of the springs have an influence on the magnitude of the relative displacements. Figure 4.23 shows the effect on the maximum relative

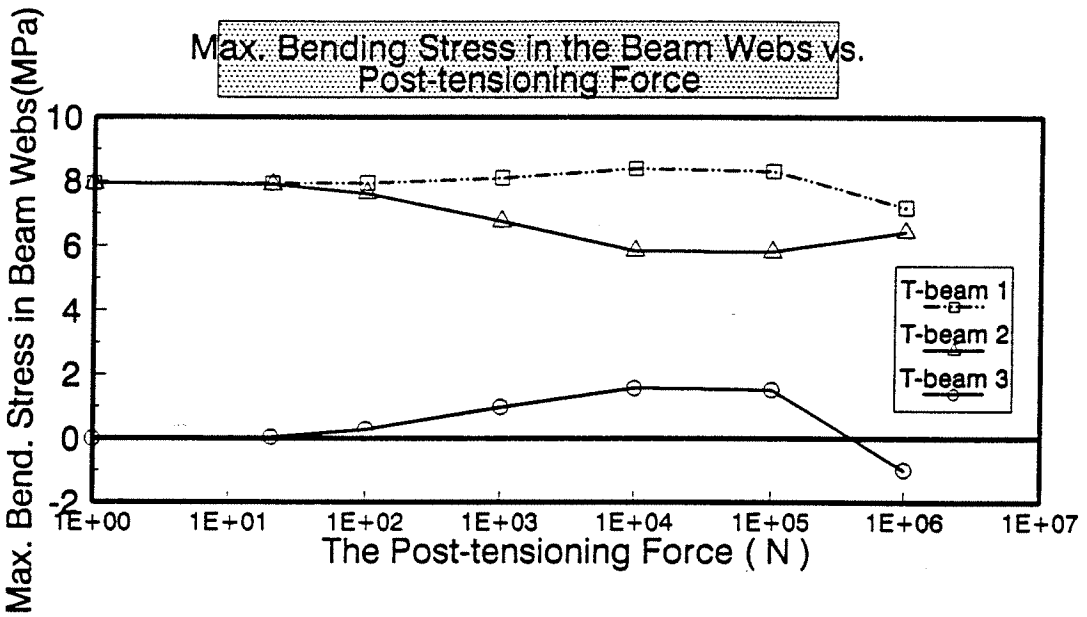

Figure 4.14: Bending Stress in T-beam Structure CASE 1

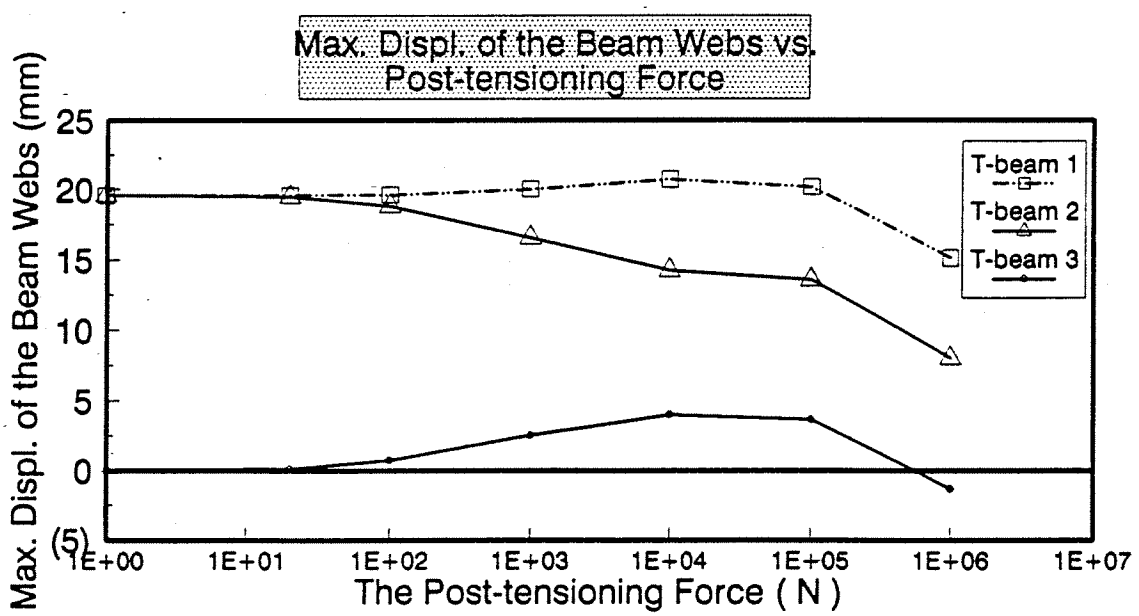

Figure 4.15: Displacements in T-beam Structure CASE 1

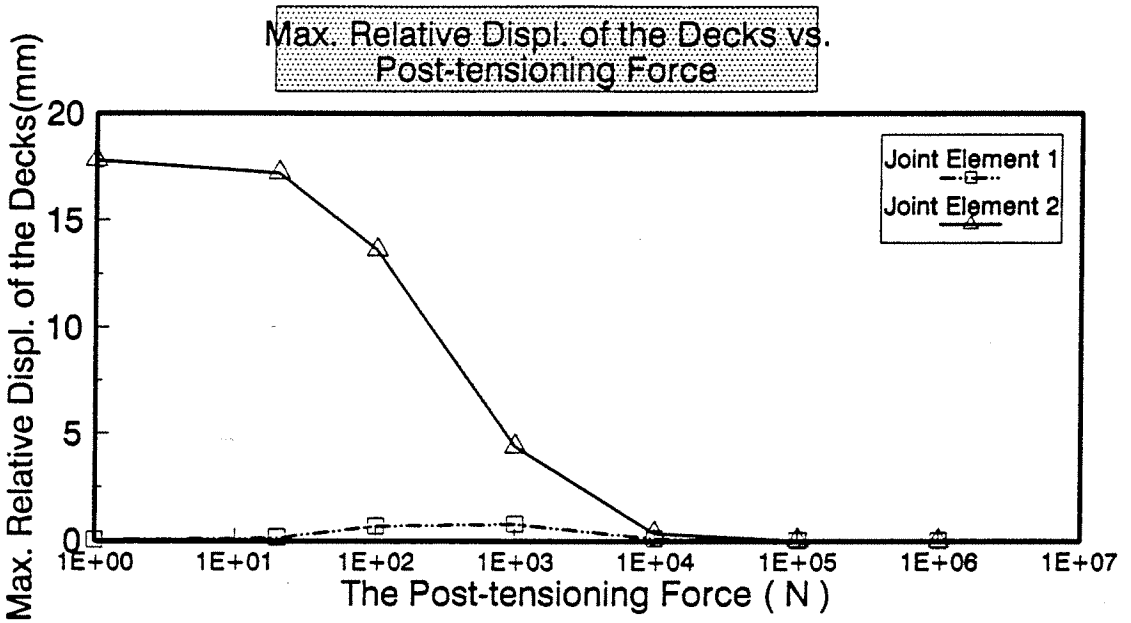

Figure 4.16: Relative Displacements in T-beam Structure CASE 1

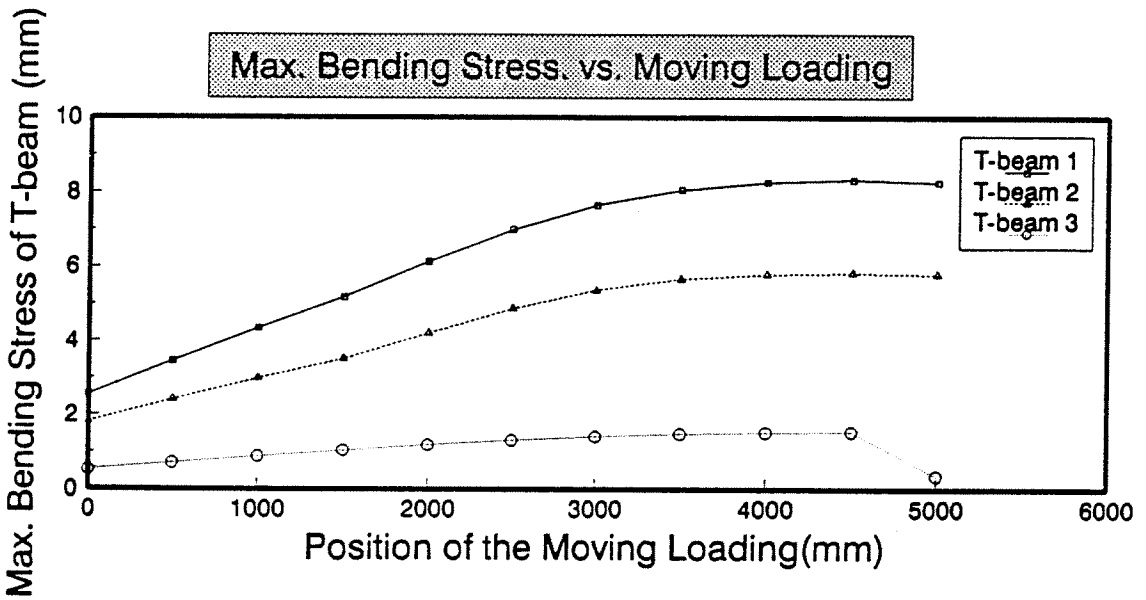

Figure 4.17: Bending Stress under Moving Loading

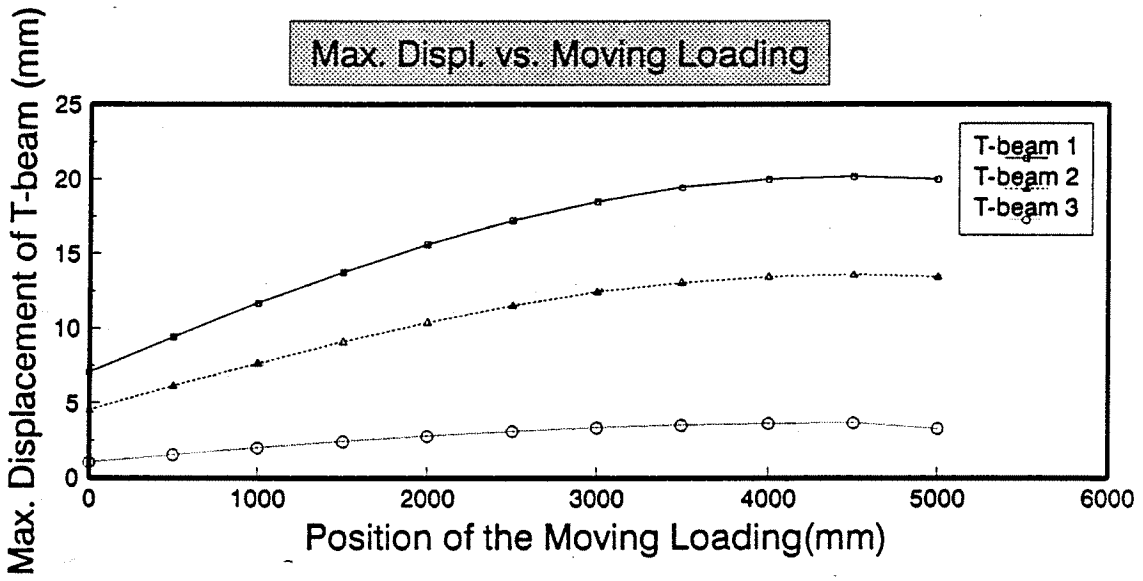

Figure 4.18: Displacements under Moving Loading

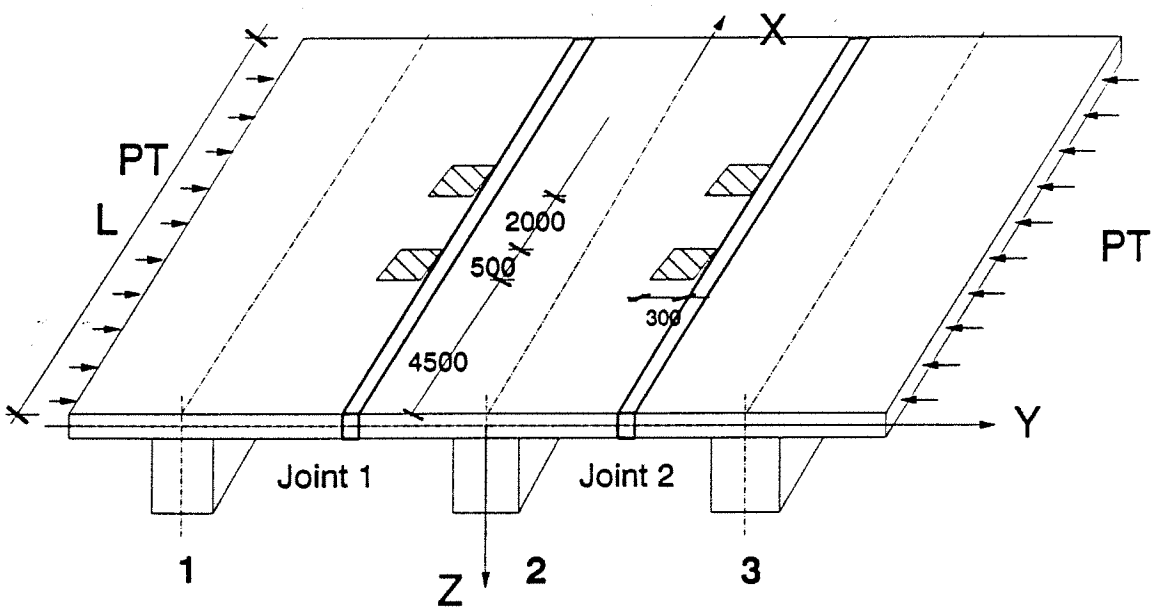

Figure 4.19: T-beam Structure CASE 2

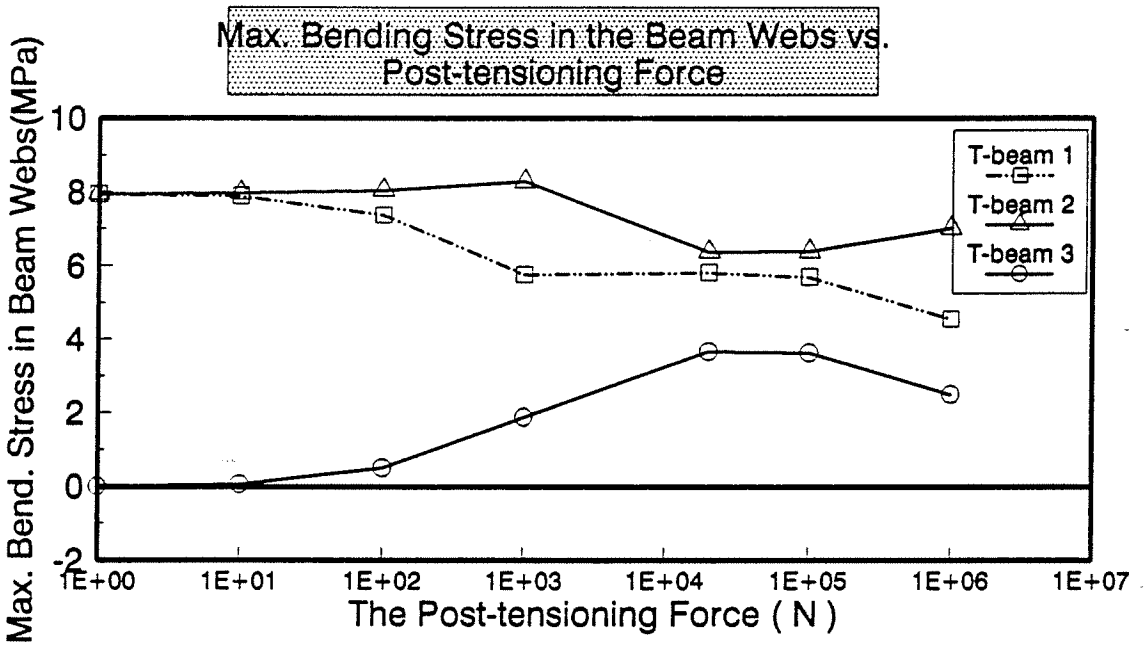

Figure 4.20: Bending Stress in T-beam Structure CASE 2

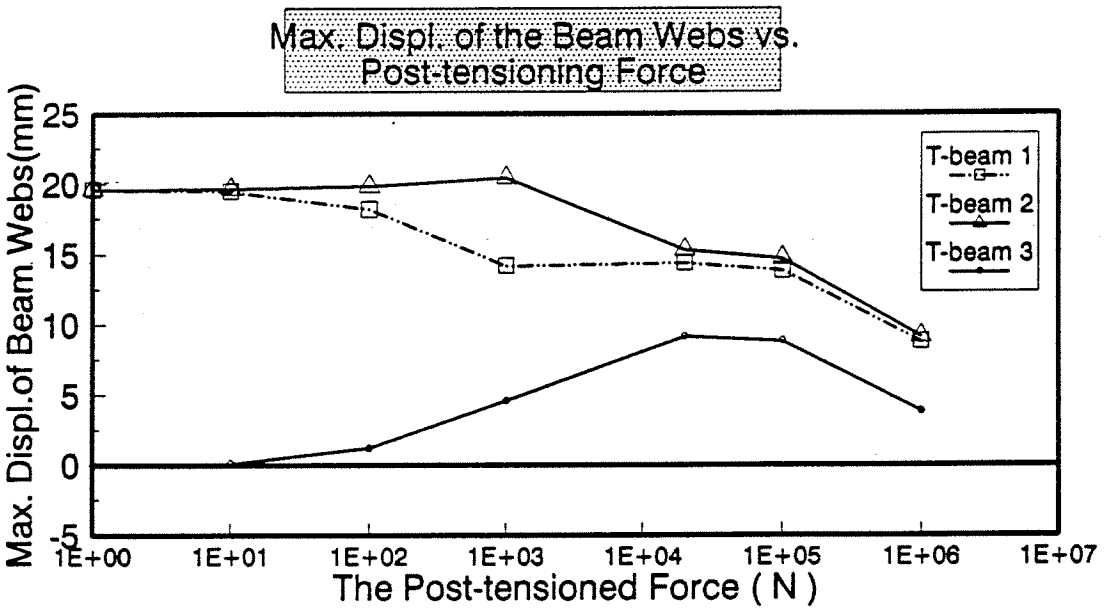

Figure 4.21: Displacements in T-beam Structure CASE 2

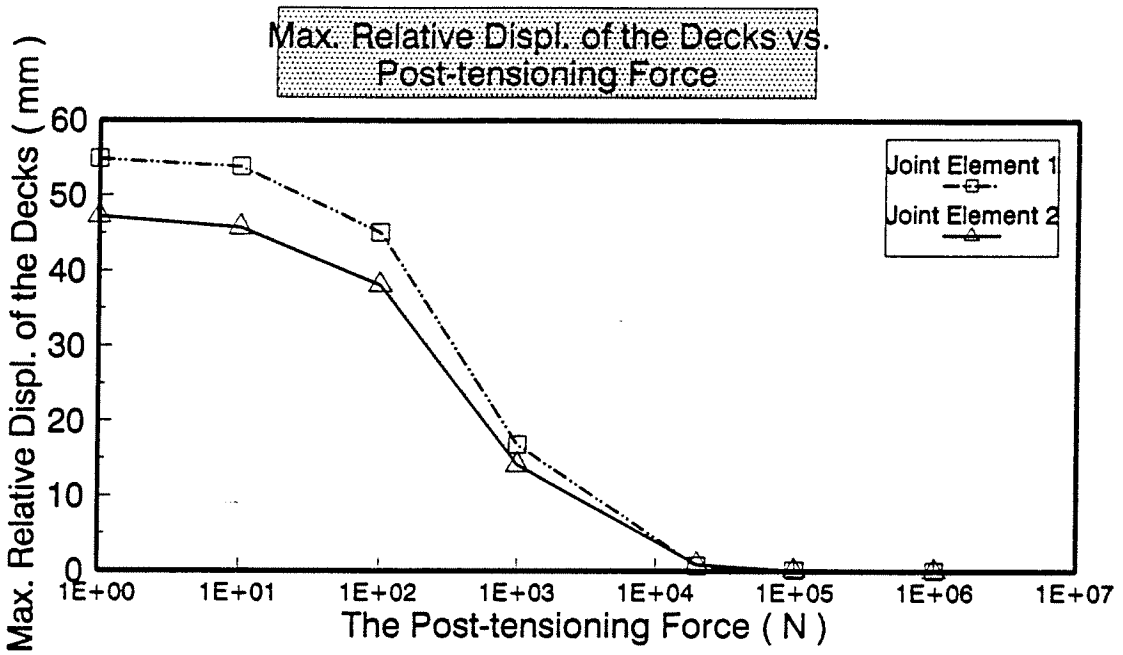

Figure 4.22: Relative Displacements in T-beam Structure CASE 2

vertical displacement if the horizontal spring stiffness E_x and the vertical spring stiffness E_z are changed from $E_x = 16.9N/mm$ and $E_z = 17.4N/mm$ to $E_x = 169N/mm$ and $E_z = 174N/mm$ respectively. It is seen that these parameters should be known with some accuracy if the maximum relative displacement is to be estimated at intermediate post-tensioning forces. However, the level of the post-tensioning force which makes the whole structure work as a unit is less affected by the uncertainty in E_x and E_z. Determination of E_x and E_z should include a larger experimental sample than used in this thesis.

CASE 3

In this case, the vehicle loadings were next the center lines of the T-beams as shown Figure 4.24. In addition to the maximum bending stress, maximum displacement in the beam webs and the maximum deformation of the joint elements in the z-direction shown respectively in Figure4.25 through Figure4.27, the program PTB was used to study the

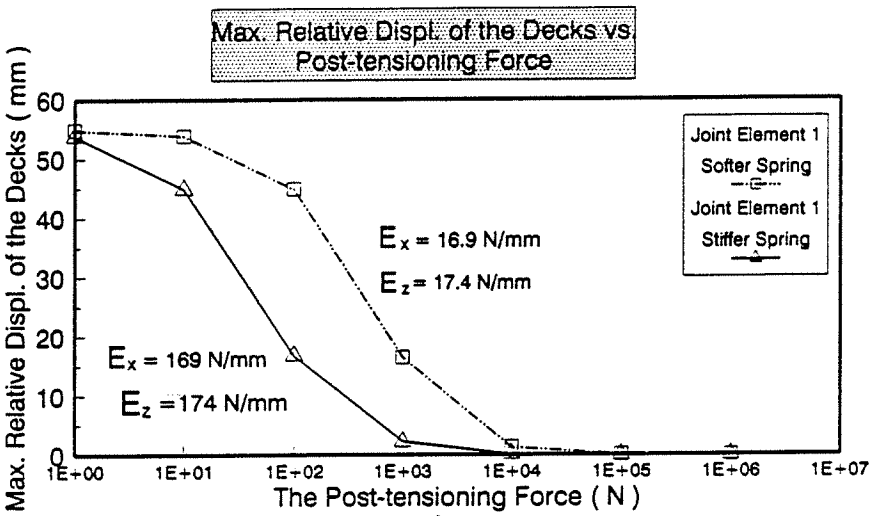

Figure 4.23: The Effect of the Stiffness of the Spring

convergence of the solution as the number of terms in the Fourier series was increased. As discussed in Chapter 2, the larger the number of Fourier series terms included, the greater the coupling in the system of equations. Since the structure and the loading cases were symmetric in x-direction, only odd number terms in the Fourier series were included. From Figures 4.28 to 4.31, it can be seen that the convergence is quite good with only two Fourier terms (n = 1,3), being sufficient to obtain satisfactory answers.

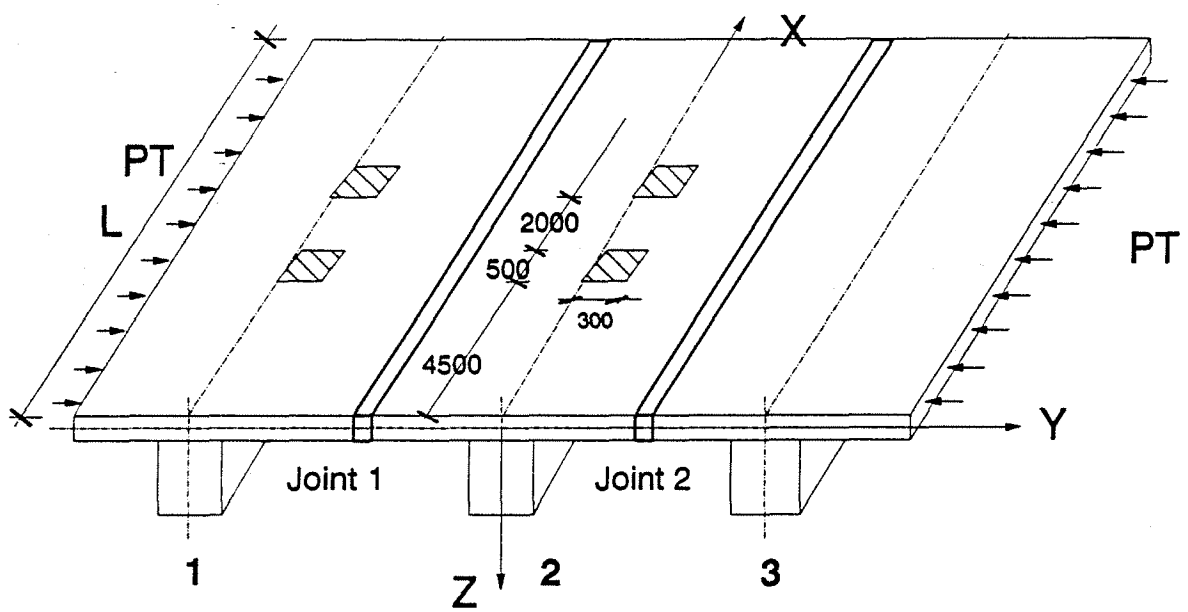

Figure 4.24: T-beam Structure CASE 3

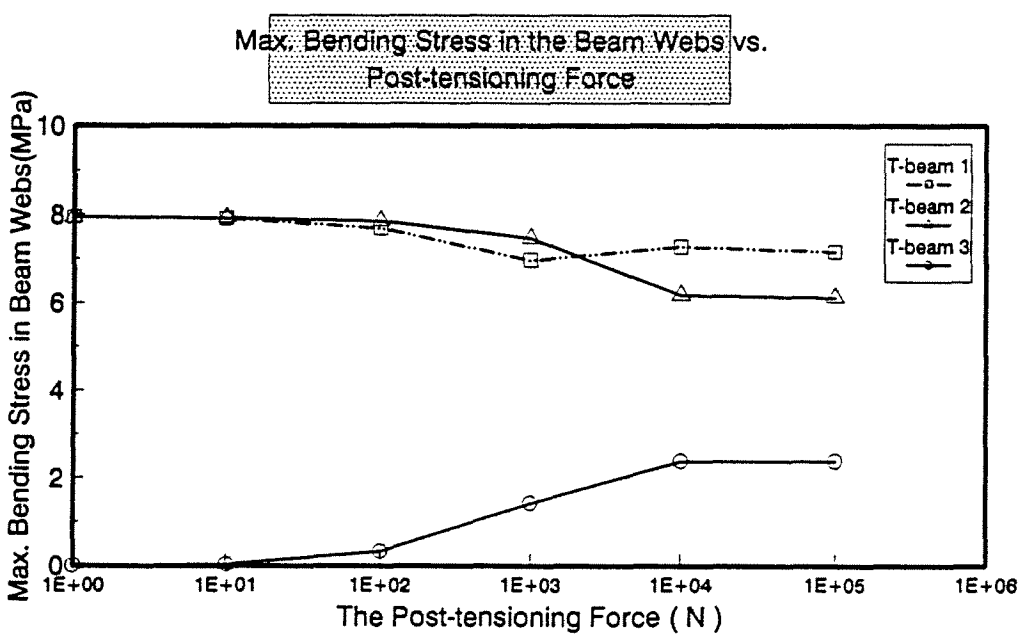

Figure 4.25: Bending Stress in T-beam Structure CASE 3

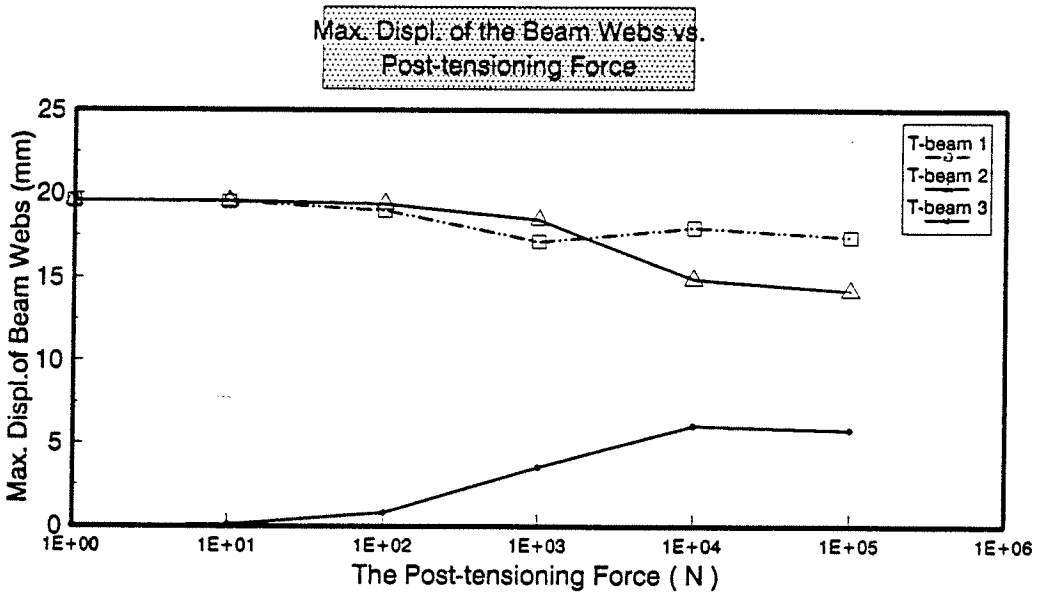

Figure 4.26: Displacements in T-beam Structure CASE 3

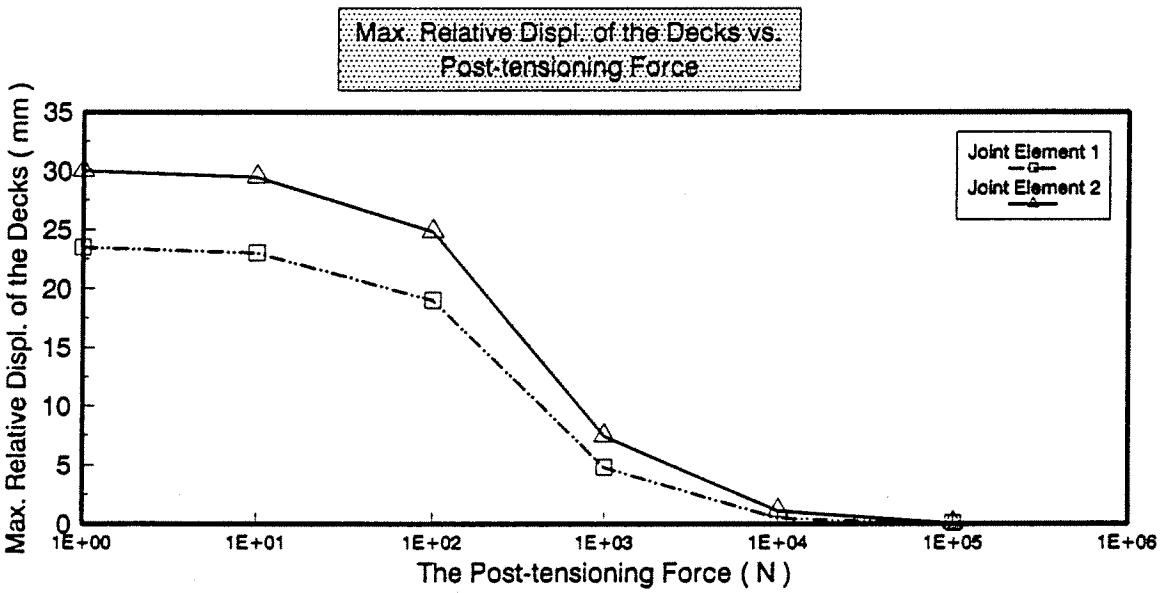

Figure 4.27: Relative Displacements in T-beam Structure CASE 3

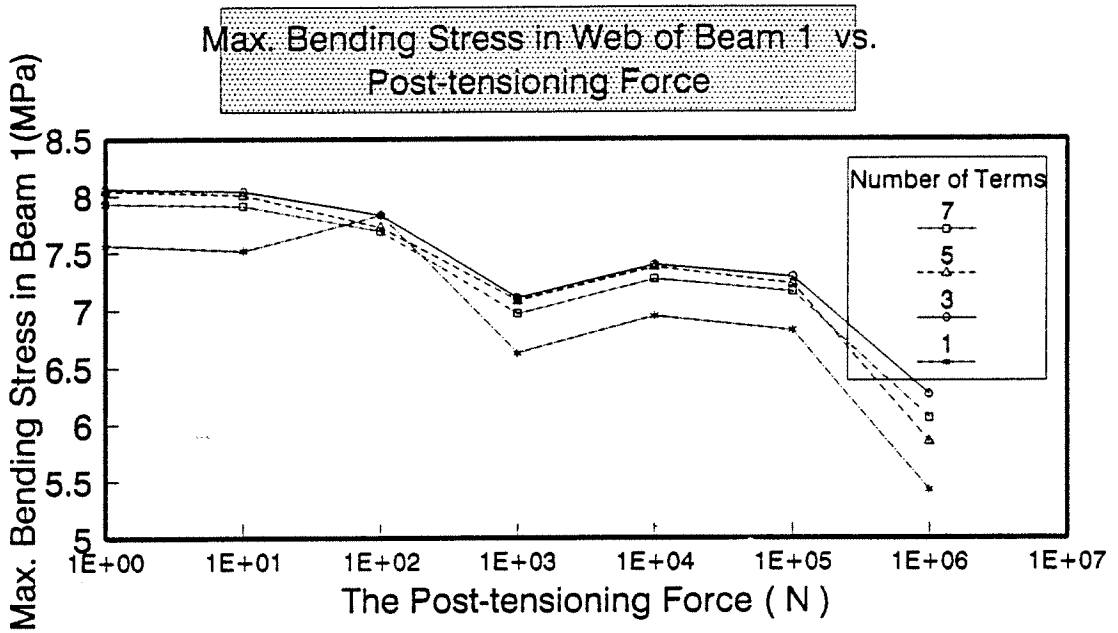

Figure 4.28: Effect of the Fourier Terms on Bending Stress

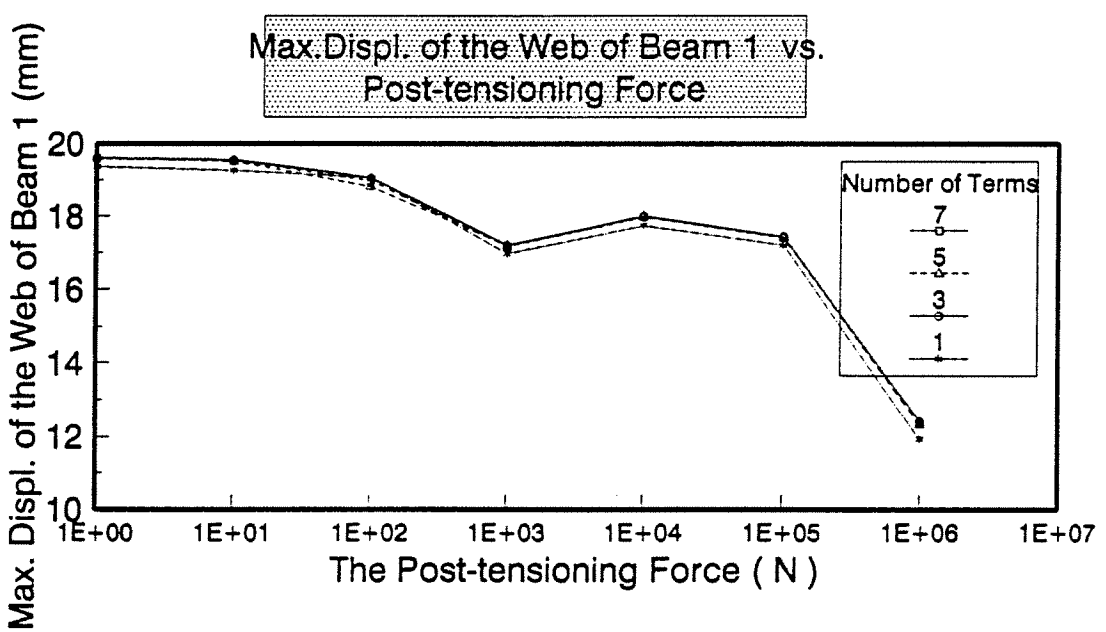

Figure 4.29: Effect of the Fourier Terms on Displacement

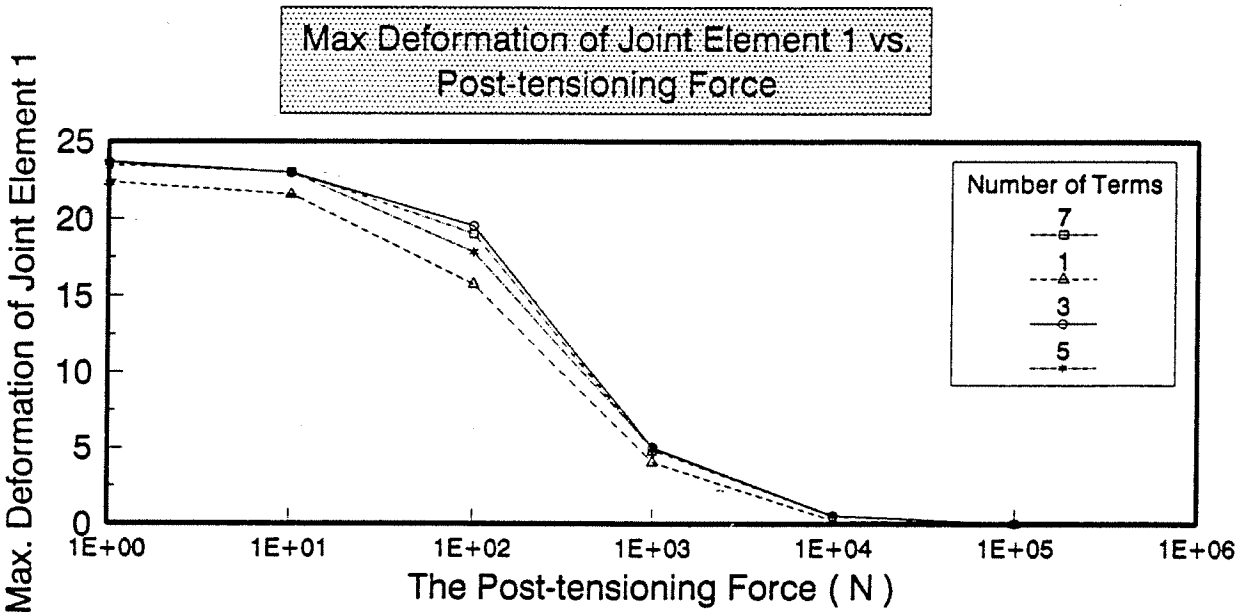

Figure 4.30: Effect of the Fourier Terms on Relative Displacement in Joint 1

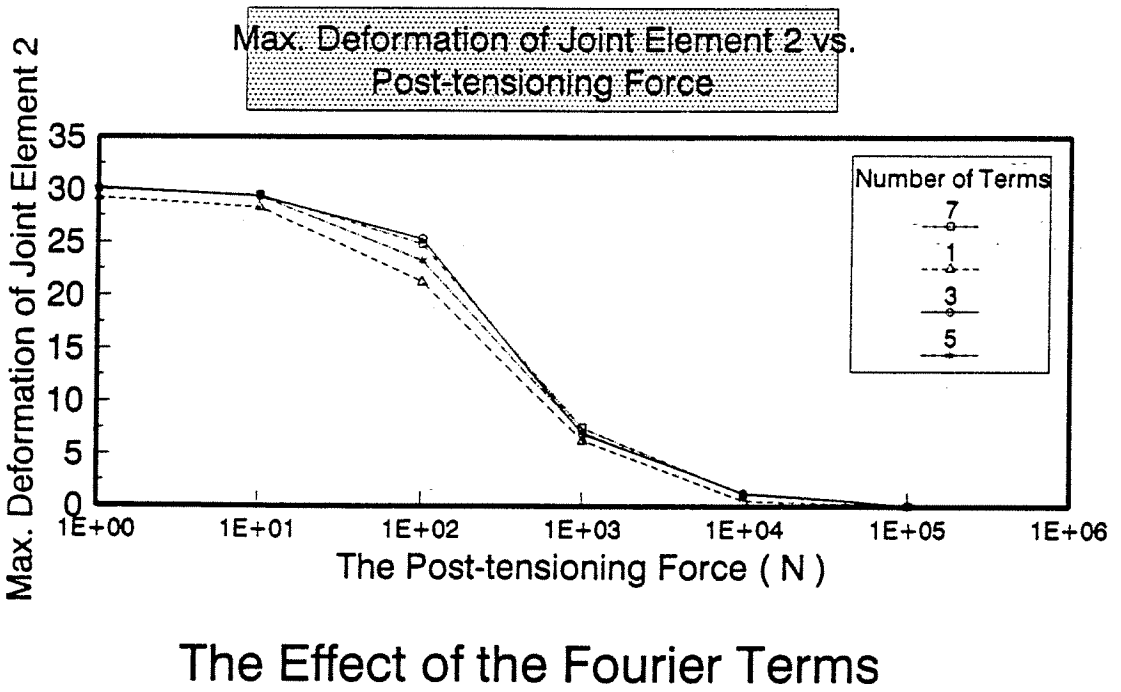

Figure 4.31: Effect of the Fourier Terms on Relative Displacement in Joint 2

Chapter 5

CONCLUSIONS

A non-linear analysis for the post-tensioned timber bridge has been developed and implemented in the computer program PTB. The analysis takes into account the frictional contact between the bridge beams. The relative movements between beams, the stresses and deformations of the structure can be obtained as a function of the post-tensioning force by PTB. It is clear that post-tensioning forces increases the stiffness of the structure, improving load sharing and increasing the load carrying capacity of the structure.

As part of a further study, it is suggested that more friction tests be done to confirm the 'same slip' assumption, and that reliability analyses be carried out to develop design criteria. The structural analysis presented here can form the basis for such probabilistic investigation.

Bibliography

[1] Csagoly, Paul F., and Taylor, Raymond J. 1980. " A Structural Wood System for Highway Bridges ", IABSE Periodica 4/1980 IABSE Proceedings pp. 35-80.

[2] Research and Development Division Ontario Ministry of Transportation and Communications, 1979. " Transverse Post-Tensioning of Longitudinally Laminated Timber Bridge Decks ", Research Report RR 220

[3] Verna, J.R., Graham, J.F., Shannon, P.H. 1984. " Timber Bridges: Benefits and Costs ", J. Structural Engr., ASCE, 110(7): 1563-1571

[4] Cheung, Y.K. 1968." Finite Strip Method in the Analysis of Elastic Plates with Two Opposite Simply Supported Ends ", Proc., Inst. Civ. Engrs., 40(5):1-7

[5] Foschi, Ricardo O. 1982. " Structural Analysis of Wood Floor Systems ", Structural Division, Proceedings of ASCE, 108(ST7): 1557-1574

[6] Thompson, E.G., Goodman, J.R., and Vanderbilt, M.D. 1975. " Finite Element Analysis of Layered Wood Systems ", Journal of the Structural Division, ASCE, 101(12): 2659-2672

[7] Thompson, E.G., Vanderbilt, M.D., and Goodman, J.R., 1977. " FEAFLO: A Program for the Analysis of Layered Wood Systems ", 7: 237-248

[8] Taylor, Raymond J. and Csagoly, Paul F. 1980. " Rehabilitation of Wood Highway Bridges in Ontario ", Research Report Ministry of Transportation and Communications

[9] Onate, E. and Suarez, B. 1983. " A Unified Approach for the Analysis of Bridges, Plates and Axisymmetric Shells Using the Linear Mindlin Strip Element " Computers and Structures 407-426

[10] Harik, Issam E. and Salamoun, Ghassan L. 1988. " The Analytical Strip Method of Solution for Stiffened Rectangular Plates ", Computers and Structures 29(2): 283-291

[11] Timoshenko, S.P. and Woinowsky-Krieger,S., 1959."Theory of Plates and Shells", McGraw - Hill Book Co., New York, N.Y.

[12] Zienkiewicz, O.C., 1971." The Finite Element Method in Engineering Science ", McGraw-Hill Book Co., London,U.K. pp. 254-273

[13] " Wood Joist Floors ", 1978 Structural Research Report No.19, Civil Engineering Department, Colorado State Uni., Fort Collins, Colo., USA.

[14] Cook, Robert D., Malkus,David S., Loesha,Michaele, 1989. " Concepts and Applications of Finite Element Analysis " Third Edition University of Wisconsin-Madison

[15] Dhatt, Gouri., Touzot, Gilbert., 1984. " The finite Element Method Displayed ", Chichester [West Sussex] New York: Wiley

Appendix A

SHAPE FUNCTIONS AND DERIVATIVES

Polynomial Shape Functions

Vector $\{M_0\}$ All components are zero except:

$$M_0(1) = \xi^2 - \frac{5}{4}\xi^3 - \frac{1}{2}\xi^4 + \frac{3}{4}\xi^5$$

$$M_0(2) = \frac{1}{8}(\xi^2 - \xi^3 - \xi^4 + \xi^5)$$

$$M_0(9) = \frac{1}{2}(\xi - 2\xi^3 + \xi^5)$$

$$M_0(10) = 1 - 2\xi^2 + \xi^4$$

$$M_0(14) = \xi^2 + \frac{5}{4}\xi^3 - \frac{1}{2}\xi^4 - \frac{3}{4}\xi^5$$

$$M_0(15) = \frac{1}{8}(-\xi^2 - \xi^3 + \xi^4 + \xi^5)$$

Vector $\{M_3\}$ All components are zero except:

$$M_3(3) = \frac{1}{4}(-3\xi + 4\xi^2 + \xi^3 - 2\xi^4)$$

$$M_3(4) = \frac{1}{8}(-\xi + \xi^2 + \xi^3 - \xi^4)$$

$$M_3(7) = 1 - 2\xi^2 + \xi^4$$

$$M_3(16) = \frac{1}{4}(3\xi + 4\xi^2 - \xi^3 - 2\xi^4)$$

$$M_3(17) = \frac{1}{8}(-\xi - \xi^2 + \xi^3 + \xi^4)$$

Vector $\{M_5\}$ All components are zero except:

$$M_5(5) = M_3(3) \qquad M_5(6) = M_3(4) \qquad M_5(8) = M_3(7)$$

$$M_5(18) = M_3(16) \qquad M_5(19) = M_3(17)$$

Vector $\{M_1\}$ $\{M_2\}$ $\{M_4\}$

$$M_1(k) = \frac{dM_0(k)}{d\xi}; \quad M_2(k) = \frac{dM_0^2(k)}{d\xi^2};$$

$$M_4(k) = \frac{dM_3(k)}{d\xi}; \quad M_6(k) = \frac{dM_5(k)}{d\xi};$$

Where: $k = 1, 2, \ldots, 19.$

<u>Derivatives of the Displacement Functions</u>

$$\frac{\partial w(x,y)}{\partial x} = \sum_{n=1}^{N} \{M_0(\xi)\}^T \{\delta_n\} (\frac{n\pi}{L}) cos(\frac{n\pi x}{L})$$

$$\frac{\partial^2 w(x,y)}{\partial x^2} = -\sum_{n=1}^{N}\{M_0(\xi)\}^T\{\delta_n\}(\frac{n\pi}{L})^2 sin(\frac{n\pi x}{L})$$

$$\frac{\partial w(x,y)}{\partial y} = \sum_{n=1}^{N}\{M_1(\xi)\}^T\{\delta_n\}(\frac{2}{s})sin(\frac{n\pi x}{L})$$

$$\frac{\partial^2 w(x,y)}{\partial y^2} = \sum_{n=1}^{N}\{M_2(\xi)\}^T\{\delta_n\}(\frac{2}{s})^2 sin(\frac{n\pi x}{L})$$

$$\frac{\partial^2 w(x,y)}{\partial x \partial y} = \sum_{n=1}^{N}\{M_1(\xi)\}^T\{\delta_n\}(\frac{2}{s})(\frac{n\pi}{L})cos(\frac{n\pi x}{L})$$

$$\frac{\partial u(x,y)}{\partial x} = -\sum_{n=1}^{N}\{M_3(\xi)\}^T\{\delta_n\}(\frac{n\pi}{L})sin(\frac{n\pi x}{L})$$

$$\frac{\partial u(x,y)}{\partial y} = -\sum_{n=1}^{N}\{M_4(\xi)\}^T\{\delta_n\}(\frac{2}{s})cos(\frac{n\pi x}{L})$$

$$\frac{\partial v(x,y)}{\partial x} = \sum_{n=1}^{N}\{M_5(\xi)\}^T\{\delta_n\}(\frac{n\pi}{L})cos(\frac{n\pi x}{L})$$

$$\frac{\partial v(x,y)}{\partial y} = \sum_{n=1}^{N}\{M_6(\xi)\}^T\{\delta_n\}(\frac{2}{s})sin(\frac{n\pi x}{L})$$

$$\frac{d^2 U(x)}{dx^2} = -\sum_{n=1}^{N} U_n(\frac{n\pi}{L})^2 cos(\frac{n\pi x}{L})$$

$$\frac{d^2 W(x)}{dx^2} = -\sum_{n=1}^{N} W_n(\frac{n\pi}{L})^2 sin(\frac{n\pi x}{L})$$

$$\frac{d^2 V(x)}{dx^2} = -\sum_{n=1}^{N} V_n(\frac{n\pi}{L})^2 sin(\frac{n\pi x}{L})$$

$$\frac{d^2 \theta(x)}{dx^2} = -\sum_{n=1}^{N} \theta_n(\frac{n\pi}{L})^2 sin(\frac{n\pi x}{L})$$

Appendix B

THE PTB PROGRAM

B.1 PTB Program Specifications

The non-linear analysis for the transverse post-tensioned bridge structure can be done with the PTB computer program. The wheel loadings are idealized as patches of static loading. PTB evaluates the response of the structure subjected to the transverse post-tensioning forces and the wheel loadings in terms of :

- the maximum deflection of the T-beam web;
- the maximum bending stress in the T-beam web;
- the maximum deflection of the T-beam flange;
- the maximum stress of the T-beam flange;
- the maximum deformations (relative displacements) of the joint elements in the x, the y and the z-direction.

The stiffness matrices and the consistent load vectors were derived in Chapter 2. PTB can be run in an IBM 386 PC computer or a UNIX SUN work station. The program limits the size of the problem which can be solved, as follows:

- MAX. NUMBER OF T-BEAMS = 10 (MJT)
- MAX. NUMBER OF JOINT ELEMENTS = 9 (MSP)

- MAX. NUMBER OF 3-D SPRINGS IN ONE JOINT ELEMENT = 126 (INCLUDING SPRINGS AT BOTH TOP AND BOTTOM) ($MNP = 126 * 3 = 378$)
- MAX. NUMBER OF FOURIER TERMS = 4 (MFT) (*)
- MAX. NUMBER OF LOADED AREAS = 12 (MLD)
- MAX. NUMBER OF BOUNDARY CONDITIONS = 20 (MBC)
- MAX. NUMBER OF POST-TENSIONING FORCES PAIRS = 20 (MPF)

(*) If the problem is symmetric about midspan in the x-direction, 'four terms' in the Fourier series means that the terms with order 1,3,5 and 7 are chosen.
If the problem is not symmetric in the x-direction, 'four terms' in the Fourier series means that the terms with order 1,2,3 and 4 are chosen.

According to the capacity of the computer, the size of the problem can be expanded by changing the corresponding parameters in the PTB source code.

B.2 Program Structure

The program PTB consists of one main program and a number of subroutines. Each subroutine performs its specific function. The flow chart of the Main Program of PTB is given below.

PTB uses common blocks to convey data between the main program and subroutines and between the subroutines as well.

<u>SUBROUTINE DATA</u>

This subroutine inputs data for the structure in free format through a data file PTB.DAT, which includes the size of the structure, the number of the terms in the

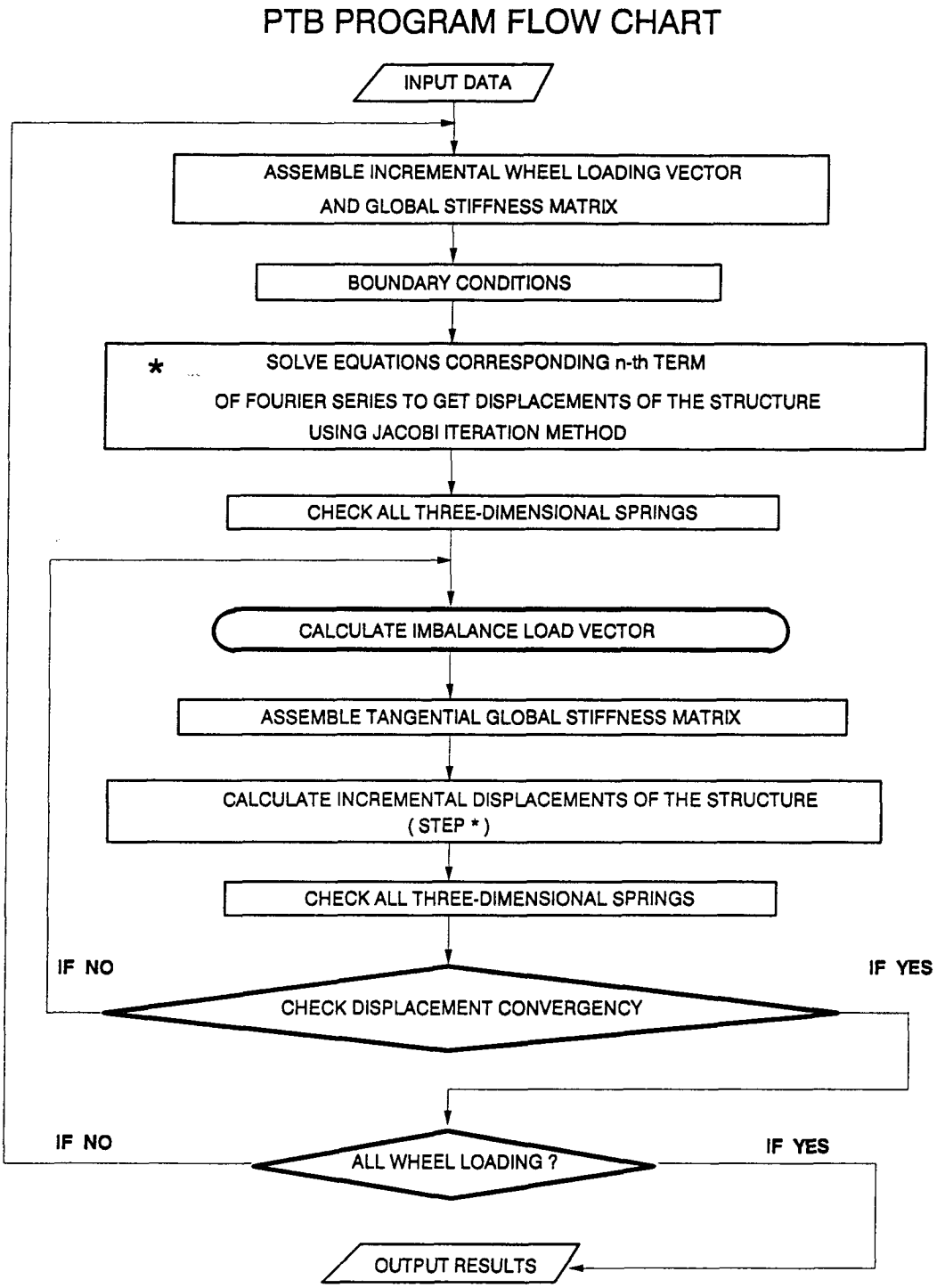

Figure B.1: PTB Program Flow Chart

Fourier series, material properties, vehicle wheel loadings, transverse post-tensioning forces, number of three-dimensional springs in the joint elements, boundary conditions etc. This subroutine can print out the input data as a double check.

SUBROUTINE GENMTX

This subroutine calculates the integrals in Equation 2.20-Equation 2.27 using a six-point Gaussian quadrature to evaluate the contributions from the T-beam flanges to the stiffness matrix.

SUBROUTINE COVCON

This subroutine calculates the stiffness matrix of one T-beam element ESTIF(I,J) excluding the stiffness contributions of the T-beam web. ESTIF(I,J) is 19 x 19 symmetric matrix corresponding to each term of the Fourier series.

SUBROUTINE STIF12

This subroutine creates the 12 x 12 stiffness matrix from one joint element with respect to each term of Fourier series. One joint element consists of 2 x N_s three dimensional springs. N_s has been input from the data file PTB.DAT.

In this subroutine STIF12, subroutine BX, BY and BZ are called to evaluate the stiffness contributions from the x-, the y- and the z-direction springs according to the status of each spring respectively.

SUBROUTINE CHECK

This subroutine checks every spring in each joint element, according to the current displacement and the constitutive relationship, to calculate the stiffness matrix and the internal forces of the joint elements.

SUBROUTINE LOAD

This subroutine calculates the consistent load vector XF(n,IJ) according Equation 2.86 for wheel loading and Equation 2.90 and Equation 2.91 for post-tensioning forces.

In XF(n,IJ) where:

n = the n-th term in Fourier series

IJ = 19 x NJT

NJT = the number of the T-beam elements in the structure

SUBROUTINE SLOAD

According to the checking results obtained from SUBROUTINE CHECK, this subroutine creates the internal force vector components from the 'yielded' springs.

SUBROUTINE ASMBLY

This subroutine assembles the T-beam stiffness components, connector stiffness components and joint element stiffness components to form a global stiffness matrix by calling SUBROUTINE COVCON, and SUBROUTINE STIF12.

From the Equation 2.96 we can note two kinds of matrices GK(n,n) and GK(n,m). The lower triangle of the diagonal global stiffness matrix GK(n,n) is stored column by column in the two dimensional matrix GSTIF(n,IJ). The components of the off-diagonal global stiffness matrix GK(n,m) are stored column by column in the two dimensional matrix ASTIF(nm,JK).

SUBROUTINE GBC and SUBROUTINE ABC

These two subroutines apply the boundary conditions to the stiffness matrices GSTIF(n,JK), load vector XF(n,IJ) and stiffness ASTIF(nm,JK). To impose a specific boundary restrain to the structure, the corresponding columns and rows in the stiffness matrices are set to zero, and the corresponding components in the load vector is also zeroed, as while the diagonal entry in $GK(n,n)$ is set to 1.

SUBROUTINE DCOMP

GK(n,n) is a positive-definite matrix. It has a unique decomposition form $GK(n,n) = [L][L]^T$, where $[L]$ is a lower triangular matrix with positive diagonal elements. This subroutine decomposes GK(n,n) via the Cholesky method. The lower half band of GK(n,n),

including the diagonal, is stored column by column in the GSTIF(n,JK). Cholesky decomposition is a useful method in solving the system linear equation like $GK(n,n)\{u\} = \{Q\}$ when $GK(n,n)$ is a positive-definite banded matrix.

SUBROUTINE SOLVE and SUBROUTINE ITERATION

On the basis of Cholesky decomposition the SUBROUTINE SOLVE obtains the final results, according to Equation 2.106. Then the main program calls SUBROUTINE ITERATION to solve Equation 2.105. The final answer will be obtained when the iteration converges.

$\|\{\Delta u_k\}_m^i - \{\Delta u_k\}_m^{i-1}\|_2 < \epsilon\|\{\Delta u_k\}_m^{i-1}\|_2$ $k = 1, 2, \ldots, N$ and ϵ is the error tolerance

SUBROUTINE IMBALANCE

This subroutine calculates the imbalance load for each iteration in Newton-Raphson method. See Figure 2.8

SUBROUTINE RESULT

This subroutine outputs all responses of the structure in terms:

- the maximum displacement of the T-beam web
- the maximum bending stress of the T-beam web
- the maximum displacement of the T-beam flange
- the maximum stress of the T-beam flange
- the maximum deformations of the joint element in the x-direction, the y-direction and the z-direction

In all cases, the maximum response is obtained by comparing 19 values at equally spaced locations along the longitudinal span.

Appendix C

PTB USER'S MANUAL

PTB: Post-Tensioned Timber Bridge Non-linear Analysis Program

User's Manual

Version 1.0

by Cai Shen

Department of Civil Engineering, UBC

Vancouver, B.C. Canada V6T 1W5

November, 1991

The computer program PTB Version 1.0, which is written in FORTRAN 77, is developed for implementation in a DOS-based microcomputer or UNIX SUN workstation. To run the program the user creates a data file named PTB.DAT in accordance with the input instructions given below. All data are to be entered in free format (i.e. by providing a space or comma between each data entry). The capacity limitations of the PTB program are:

- MAX. NUMBER OF T-BEAMS = 10 (MJT)
- MAX. NUMBER OF JOINT ELEMENTS = 9 (MSP)
- MAX. NUMBER OF 3-D SPRINGS IN ONE JOINT ELEMENT = 126 ($MNP = 126 * 3 = 378$)
- MAX. NUMBER OF FOURIER TERMS = 4 (MFT)
- MAX. NUMBER OF LOADED AREAS = 12 (MLD)
- MAX. NUMBER OF BOUNDARY CONDITIONS = 20 (MBC)
- MAX. NUMBER OF POST-TENSIONED FORCES = 20 (MPF)

PTB produces two output files. PTB.OUT is a comprehensive output of the deformations and stresses in the structure and PTBB.OUT is a summary of the analysis results including the relative interface movements.

1. Enter: NTITLE

NTITLE = problem title (limited to 60 characters)

2. Enter: NM, NJT, ISYM

NM =

maximum order of sine/cosine terms in the Fourier series. There can be maximum of four terms. For x-direction symmetrical problem, NM can be up to 7 (the four terms will be of 1, 3, 5 and 7). If NM = 5, there will be three terms, these orders are 1, 3 and 5. For x-direction non-symmetrical problem, NM agrees with the number of terms. NM = 4 means terms with order 1, 2, 3 and 4 will be involved in the program.

NJT = number of T-beams (NJT $\leq$ 10)

ISYM =

1 if the problem is x-direction symmetrical.

0 if the problem is not x-direction symmetrical

3. Enter: XL, SPJT

XL = the span of the T-beam

SPJT = T-beam spacing (the width of the T-beam flange)

4. Enter: BJT, HJT

BJT = the width of the T-beam web

HJT = the height of the T-beam web

5. Enter: EJT(I)

EJT(I) = the elastic modulus of the i-th T-beam web

6. Enter: REG

REG = the ratio of T-beam web elastic modulus to its shear modulus(E/G)

7. Enter: PTK, EMUX, EMUZ

PTK = the thickness of the T-beam flange

EMUX = the x-direction friction coefficient of the T-beam flange

EMUZ = the z-direction friction coefficient of the T-beam flange

8. Enter: PEX, PEY, PG, PVXY, PVYX

PEX = the elastic modulus of the T-beam flange in x-direction

PEY = the elastic modulus of the T-beam flange in y-direction

PG = the shear modulus of the T-beam flange

PVXY = Poisson's ratio of T-beam flange, strain in x-direction while stress in y-direction

PVYX = Poisson's ratio of T-beam flange, strain in y-direction while stress in x-direction

9. Enter: SPC, XIN, CKPAL, CKPER, CKROT

SPC = flange connector spacing along the T-beam span

XIN =

distance between the end support and the first connector along the T-beam span

CKPAL, CKPER =

connector load-slip moduli, respectively in the directions parallel and perpendicular to the T-beam (unit = force/length)

CKROT = connector rotation modulus

10. Enter: TAOSX, TAOSZ

TAOSX = the shear strength of the T-beam flange in x-direction

TAOSZ = the shear strength of the T-beam flange in z-direction

11. Enter: NAN, N_s, MNL

NAN =

1 PTB will do non-linear analysis

0 PTB will do linear analysis only

N_s =

the number of the top three-dimensional springs in one joint element (the total number of the springs in one joint element is equal to $N_s * 2 * 3 \leq MNP = 378$)

MNL =

the number of the incremental steps (each incremental loading is equal to the wheel loading divided by MNL i.e. PPWLD/MNL)

12. Enter: EX(I)

EX(I) = the initial elastic modulus of the three dimensional spring in x-direction for the I-th joint element.

13. Enter: EY(I)

EY(I) = the initial elastic modulus of the three dimensional spring in y-direction for the I-th joint element.

14. Enter: EZ(I)

EZ(I) = the initial elastic modulus of the three dimensional spring in z-direction for the I-th joint element.

15. Enter: NWLD

NWLD = the number of the wheel loadings; if NWLD = 0 goto step 17

16. Enter: JTLD(I), X1LD(I), X2LD(I), Y1LD(I), Y2LD(I), PPWLD(I)

JTLD(I) = the number of the T-beam on which the I-th wheel loading is applied

X1LD(I) =

X2LD(I) =

Y1LD(I) =

Y2LD(I) =

the coordinates of the I-th wheel loading patch, all coordinates are local T-beam coordinates (I = 1, NWLD)

17. Enter: NPTF

NPTF =

the number of the transversely post-tensioning forces

if NPTF = 0 goto step 20

18. Enter: ES, AS, DIT, RFAC

ES, AS = the elastic modulus and area of the post-tensioning cable

DIT = the tooth distance of the threaded anchor head of post-tensioning tendon

RFAC = factor to compensate the loss of post-tensioning force

19. Enter: XPTF(I), PTF(I)

XPTF(I) = the x-coordinate of the I-th pair of post-tensioning force

PTF(I) =the magnitude of the I-th pair of post-tensioning force

(I = 1, NPTF)

20 Enter: NBC

NBC =

the number of applied boundary conditions

if NBC = 0 skip step 21

21. Enter: IBC(I,1), IBC(I,2)

IBC(I,1) =the boundary conditions for I-th T-beam

IBC(I,2) = the number of the constraint (1 to 19) (I = 1, NBC)

Appendix D

PTB SOURCE CODE AND I/O FILE

PTB.FOR

PTB.DAT

PTB.OUT

PTBB.OUT

D.1 PTB.FOR

```
C ***************************************************************
C                                                  *
C     Post Tensioned Timber Bridge Non-Linear Analysis Program     *
C                Version 1.0 (Nov. 1991)                 *
C                Civil Engineering Department              *
C                University of British Columbia            *
C                2324 Main Mall                          *
C                Vancouver, Canada V6T-1W5                 *
C                                                  *
C ***************************************************************
C
C
C-----------------------------------------
C                PROGRAM LIMITATIONS
C-----------------------------------------
C
C  1) MAXIMUM NUMBER OF T-BEAMS                  = 10 ( MJT )
C  2) MAXIMUM NUMBER OF JOINT ELEMENTS            =  9 ( MSP )
C  3) MAX. No. OF 3-DSPRINGS IN ONE JOINT ELEMENT = 126 (MNP = 126*3 )
C  4) MAXIMUM NUMBER OF FOURIER TERMS             =  4 ( MFT )
C  5) MAXIMUM NUMBER OF LOADED AREAS              = 12 ( MLD )
C  6) MAXIMUM NUMBER OF BOUNDARY CONDITIONS          = 20 ( MBC )
C  7) MAXIMUM NUMBER OF POST-TENSIONED FORCES        = 20 ( MPF )
C-----------------------------------------
C             PROGRAM VARIABLES AND OPTIONS
C-----------------------------------------
C NTITLE    = THE TITLE OF THE PROBLEM
C NM        = MAXIMUM ORDER FOR THE SINE & COSINE SERIES. NM CAN BE UP
C           TO 7 FOR SYMMETRIC PROBLEMS (ISYM = 1). NM CAN ONLY BE UP
C           TO 4 FOR NON-SYMMETRIC PROBLEMS.
C NJT       = NUMBER OF T-BEAMS
C ISYM      = 1 FOR SYMMETRIC ABOUT X-DIC CASE; = 0 OTHERWISE.
C XL        THE SPAN OF THE BRIDGE
C SPJT      = THE FLANGE WIDTH OF THE T-BEAM
C BJT       = THE WEB WIDTH OF THE T-BEAM
C HJT       = THE WEB HEIGHT OF THE T-BEAM
C EJT(I)    = THE WEB ELASTIC MODULUS OF THE i-th T-BEAM
C REG       = THE RATIO OF THE WEB ELASTIC MODULUS TO ITS SHEAR MODULUS
C PTK       = THE FLANGE THICK OF THE T-BEAM
C EMUX      = THE FRICTION COEFFICIENT OF THE FLANGE IN X-DIRECTION
C EMUZ      = THE FRICTION COEFFICIENT OF THE FLANGE IN Z-DIRECTION
C PEX       = THE ELASTIC MODULUS OF THE T-BEAM FLANGE IN X-DIRECTION
C PEZ       = THE ELASTIC MODULUS OF THE T-BEAM FLANGE IN Z-DIRECTION
C PG        = THE SHEAR MODULUS OF THE T-BEAM FLANGE
C PVXY      = POISSON'S RATIO, STRAIN IN X-DIC WHILE STRESS IN Y-DIC
C PVYX      = POISSON'S RATIO, STRAIN IN Y-DIC WHILE STRESS IN X-DIC
C SPC       = NAIL SPACING ALONG THE LONGITUDINAL SPAN OF THE BRIDGE
C XIN       = DISTANCE BETWEEN THE END SUPPORT AND THE FIRST NAIL
```

```
C          ALONG THE LONGITUDINAL SPAN OF THE BRIDGE
C CKPAL,CKPER= NAIL LOAD-SLIP MODULI, RESPECTIVELY, IN THE DIC.
C          PARALLEL AND PERPENDICULAR TO THE WEB OF THE T-BEAM
C CKROT     = NAIL ROTATION MODULUS
C TAOSX     = THE SHEAR STRENGTH OF THE FLANGE IN X-DIRECTION
C TAOSZ     = THE SHEAR STRENGTH OF THE FLANGE IN Z-DIRECTION
C NAN       = 1 - TO DO NON-LINEAR ANALYSIS
C           0 - TO DO LINEAR ANALYSIS ONLY
C NP        = THE HALF NUMBER OF THREE DIMENSIONAL SPRINGS IN ONE JOINT ELE.
C EX(I)     = THE INITIAL ELASTIC MODULUS OF THE X-DIRECTION SPRING
C EY(I)     = THE INITIAL ELASTIC MODULUS OF THE Y-DIRECTION SPRING
C EZ(I)     = THE INITIAL ELASTIC MODULUS OF THE Z-DIRECTION SPRING
C NWLD      = THE NUMBER OF THE WHEEL LOADINGS
C JTLD(I)   = THE NUMBER OF THE T-BEAM SUBJECTED BY THE WHEEL LOADING
C
C X1LD(I)
C X2LD(I)   = THE COORDINATES OF THE i-th WHEEL LOADING
C Y1LD(I)
C Y2LD(I)
C
C PPWLD(I)  = MAGNITUDE OF THE WHEEL LOADING
C NPTF      = THE NUMBER OF THE TRANSVERSELY POST-TENSIONING FORCES
C ES,AS     = THE MODULUS AND AREA OF THE POST-TENSIONING CABLE
C DIT       = THE TOOTH DISTANCE OF THE CABLE
C RFAC      = THE
C XPTF(I)   = THE X COORDINATE OF THE i-th POST-TENSIONING FORCE
C PTF(I)    = THE MAGNITUDE OF THE i-th POST-TENSIONING FORCE
C NBC       = NUMBER OF APPLIED BOUNDARY CONDITIONS.
C IBC(I,1)  = BOUNDARY CONDITIONS FOR I-TH T-BEAM WEB.
C IBC(I,2)  = NUMBER OF THE CONSTRAINT (1 TO 19).
C-----------------------------------------------------------

      IMPLICIT DOUBLE PRECISION (A - H, O -Z)
      PARAMETER (MJT = 10, MEQ = 190, MSZ = 3610, MOZ = 1296)
      PARAMETER (MFT = 4, MLD = 12, MBC = 20, MPF = 20)
      PARAMETER (MSP = 9, MFO = 6, MNP = 378)
      COMMON /B00/ PI, PI2, PI4, TOL
      COMMON /B01/ RM00(19,19), RM22(19,19), RM02(19,19), RM20(19,19),
     1          RM33(19,19), RM66(19,19), RM36(19,19), RM63(19,19),
     2          RM44(19,19), RM45(19,19), RM54(19,19), RM55(19,19),
     3          RM11(19,19)
      COMMON /B02/ AA(19,19), RM(6,19), RM1(6,19)
      COMMON /B03/ ETA(6), GWT(6)
      COMMON /B04/ NM, NSTEP, NFT, NJT, NST,NEQ, LHB, NSZ,NA1
      COMMON /B05/ XL, SPJT
      COMMON /B06/ EJT(MJT), GJT(MJT), BJT, HJT, AJT, RIY, RIZ, RIT
      COMMON /B07/ PTK, PEX, PEY, PG, PVXY, PVYX, PKX, PKY, PKV, PKG,
     1          PDX, PDY, PDV, PDG
      COMMON /B08/ CKPAL, CKPER, CKROT, SPC,XIN
      COMMON /B09/ X1LD(MLD), X2LD(MLD), Y1LD(MLD), Y2LD(MLD),
     1          PWLD(MLD),PPWLD(MLD), JTLD(MLD), NWLD
      COMMON /B10/ XPTF(MPF), PTF(MPF),NPTF
```

```
      COMMON /B11/ IBC(MBC,2), NBC
      COMMON /B12/ ESTIF(19,19)
      COMMON /B13/ GSTIF(MFT,MSZ), ASTIF(MFO,MOZ),
     1          XF(MFT,MEQ),FF(MFT,MEQ),RFF(MFT,MEQ),SVEC(MFT,MEQ),
     3          SVEC1(MFT,MEQ),SVEC2(MFT,MEQ),XFX(MFT,MEQ),EK(8,8)
      COMMON /B14/  XK(8,8),YK(8,8),ZK(8,8),
     1           BX1(1,8),BX2(1,8),BY1(1,8),BY2(1,8),
     2           BZ1(1,8),BZ2(1,8),BX1T(8,1),BX2T(8,1),BY1T(8,1),
     3           BY2T(8,1),BZ1T(8,1),BZ2T(8,1),SXK(8,8),
     4           SYK(8,8),SZK(8,8),EK12(12,12)
      COMMON /B15/  EX(MSP),EY(MSP),EZ(MSP),NAN,NP,MNL
      COMMON /B17/  ICH(MSP,MNP),ICH1(MSP,MNP),SL(12),
     1           DDX,DDZ,FX,FZ,TOLL,NNA
      COMMON /B18/  SIGMAY,WDX1(MSP),WDX2(MSP),
     1           WDY1(MSP),WDY2(MSP),WDZ1(MSP),WDZ2(MSP)


C ---------------------------------------------------------------

      WRITE (*,111)
  111 FORMAT (//////////////////////////////////////)
      WRITE (*,20)
   20 FORMAT (T10,
     1'*****************************************************',/T10,
     2'*                                                   *',/T10,
     3'*                    PTB                            *',/T10,
     4'*                                                   *',/T10,
     5'*  Post Tensioned Timber Bridge Non-Linear Analysis  *',/T10,
     6'*                  PROGRAM                          *',/T10,
     6'*                Version 1.0                        *',/T10,
     7'*                                                   *',/T10,
     8'*          Civil Engineering Department             *',/T10,
     9'*         University of British Columbia            *',/T10,
     *'*              Vancouver, Canada                    *',/T10,
     1'*              November 1991                        *',/T10,
     2'*                                                   *',/T10,
     3'*****************************************************',////)

      OPEN(UNIT=1,FILE='ptb.dat',STATUS='old')
      OPEN(UNIT=2,FILE='ptb.out',STATUS='unknown')
      OPEN(UNIT=3,FILE='ptbb.out',STATUS='unknown')

      PI  = 4.0D0 * DATAN(1.0D0)
      PI2 = PI**2
      PI4 = PI**4
      TOL = .001
      .
      CALL DATA
       WRITE(*,1)
    1  FORMAT(1X,'THE DATA HAVE BEEN INPUT')

      CALL GENMTX
```

```
      NPT = 6 * NP
      DO 25 I = 1,NST
      DO 25 J = 1,NPT
       ICH(I,J) = 1
 25    ICH1(I,J) = 0
      NNA = 0

      DO 26 IK =1,NM,NSTEP
      IKM = IK
      IF (NSTEP .EQ. 2) IKM =(1+IK)/2
      DO 26 I = 1,NEQ
      SVEC2(IKM,I) = 0.D0
      SVEC(IKM,I) = 0.D0
      RFF(IKM,I) = 0.D0
 26   FP(IKM,I) = 0.D0

      MMM = MNL + 1
      DO 350  LMN =1,MMM
C ---------------
       IF ( LMN .EQ. 1 ) THEN
       WRITE(*,*)
       WRITE(*,*)' APPLY POST-TENSIONING FORCE ONLY'
       END IF

       IF ( LMN .NE. 1 ) THEN
       WRITE(*,*)
       WRITE(*,*)' APPLY WHEEL LOADING TO THE BRIDGE'
       END IF
C ---------------
      DO 3 I = 1, NWLD
 3     PWLD(I) = (LMN-1)*PPWLD(I)/  (MMM - 1)

      CALL LOAD(1.2)

       DO 30IK = 1,NM,NSTEP
       IKO =IK
       IF (NSTEP .EQ. 2) IKO = (IK+1)/2
       DO 30 I = 1,NEQ
 30     XFX(IKO,I) = XF(IKO,I)

      CALL ASMBLY
      WRITE(*,*)
  8   FORMAT(8X,'THE GLOBAL STIFFNESS MATRIX HAS BEEN ASSMBLED')

      DO 9 I = 1, NWLD
 9     PWLD(I) = PPWLD(I)/  (MMM - 1)

       WRITE(*,*)
      IF (LMN .EQ. 1) THEN
      IF (NPTF .EQ.0) GOTO 350
      CALL LOAD(1,0)
```

```
      END IF
      IF (LMN .GE. 2) THEN
      IF (NWLD .EQ.0) GOTO 356
      CALL LOAD(0,2)
      END IF
       WRITE(*,10)
 10    FORMAT(8X,'THE GLOBAL LOAD MATRIX HAS BEEN ASSMBLED')
       WRITE(*,*)

      DO 29 IK =1,NM,NSTEP
      IKM = IK
      IF (NSTEP .EQ. 2) IKM =(1+IK)/2
      DO 29 I = 1,NEQ
 29   XF(IKM,I) = XF(IKM,I) + RFF(IKM,I)


      DO 60 IK = 1, NM, NSTEP
      DO 55 IN = 1,IK,NSTEP
       IKM = IK
       INM = IN
       IF (NSTEP .EQ. 2) THEN
       IKM = (IK + 1)/2
       INM = (IN + 1)/2
       END IF
C ---------------------------
      IF (IN .NE. IK) THEN
      IKO = (INM - 1) *NFT + IKM - INM* (INM + 1)/2
       END IF
       IF ( IN .EQ. IK ) THEN
       IKO = IKM
       CALL GBC(IKO)
       CALL DCOMP(IKO)
       DO 33 I = 1, NEQ
       FF(IKO,I) =  XF(IKO,I)
 33    CONTINUE
       CALL SOLVE(IKO)
       DO 44 I = 1,NEQ
 44    SVEC(IKO,I) = XF(IKO,I)
      END IF
 55   CONTINUE
 60   CONTINUE

C  USING ITERATING METHOD TO SOLVE THE COUPLING EQUATION

      CALL ITERATE
C ------------------------
      IF ( NAN .EQ. 0)GOTO 315
C ------------------------

       CALL CHECK(0)
       WRITE(*,*) '        CHECK HAS BEEN FINISHED'
       WRITE(*,*)
```

```
      IF ( NNA .NE. 0 ) THEN
      WRITE(*,*)'        NON-LINEAR ANALYSIS IS DOING '
      WRITE(*,*)
      DO 240 IK = 1, NM, NSTEP
       IKM = IK
       IF (NSTEP .EQ. 2) THEN
       IKM = (IK + 1)/2
       END IF
       DO 240 I = 1, NEQ
 240   SVEC1(IKM,I) = SVEC(IKM,I)
C ------------------------------
 245    CALL IMBALANCE(1)
       CALL ASMBLY
      DO 249 IK = 1,NM,NSTEP
      DO 249 IN = 1,IK,NSTEP
      IKM = IK
      INM = IN
      IF(NSTEP .EQ. 2) THEN
      IKM = (IK+1)/2
      INM = (IN+1)/2
      END IF
      IF (IN .NE. IK) THEN
      IKO = (INM - 1) *NFT + IKM - INM* (INM + 1)/2
       END IF
       IF ( IN .EQ. IK ) THEN
       IKO = IKM
       CALL GBC(IKO)
       CALL DCOMP(IKO)
      DO 246 I =1,NEQ
      PF(IKM,I) = XF(IKM,I)
 246  CONTINUE
      CALL SOLVE(IKM)
      DO 247 I = 1,NEQ
 247  SVEC(IKM,I) = XF(IKM,I)
      END IF
 249  CONTINUE
       CALL ITERATE
C ------------------------------
      NLF = 1
      DO 260 IK = 1, NM, NSTEP
       IKM = IK
       IF (NSTEP .EQ. 2) THEN
       IKM = (IK + 1)/2
       END IF
       TP = 0.0
       TP1 = 0.0
C ------------------------------
       AMAX = 0.0
       DO 250 I = 1,NEQ
       TP1 = TP1 + (SVEC1(IKM,I)**2)+SVEC2(IKM,I)**2
       TOLL = 0.01
```

```
C ------------------------------
 250  TP = TP +(SVEC(IKM,I)**2)
c      WRITE(*,*)'TOLL =  ',TOLL
      TP = DSQRT(TP)
      TP1 = DSQRT(TP1)
      EP = TP/TP1
      WRITE(*,*)'EP =  NON LINEAR',EP,'IKM = ',IKM
c      WRITE(*,*)'LMN =  ',LMN
c      WRITE(*,*)'PWLD(I) = ',(LMN-1)*PPWLD(1)/ (MMM - 1)
      NPA = 1
      IF ( EP .GT. TOLL) NPA = 0
      NLF = NLF * NPA
      DO 260 I = 1,NEQ
      SVEC1(IKM,I) = SVEC1(IKM,I) + SVEC(IKM,I)
 260  CONTINUE
       DO 280 IK = 1, NM, NSTEP
      IKM = IK
      IF (NSTEP .EQ. 2) THEN
      IKM = (IK + 1)/2
      END IF
      DO 280 I = 1, NEQ
 280  SVEC(IKM,I) = SVEC1(IKM,I)
      IF ( NLF .EQ. 1) GOTO 300
      WRITE(*,*)
      WRITE(*,*)'       NON-LINEAR ANALYSIS IS CONTINUING'
      WRITE(*,*)
      GOTO 245
      END IF
C ------------------------------
     IF ( NNA .EQ. 0)THEN
     WRITE(*,*)'       NO NON-LINEAR SPRING OCCURS'
     WRITE(*,*)
     END IF
C ------------------------------
 300  CONTINUE
     CALL IMBALANCE(0)
     DO 310 I =1,NEQ
     RFF(IKM,I) = XF(IKM,I)
 310 CONTINUE
 315 CONTINUE
      DO 320 IK =1,NM,NSTEP
     IKM = IK
     IF (NSTEP .EQ. 2) IKM =(1+IK)/2
     DO 320 I = 1,NEQ
 320 SVEC2(IKM,I) = SVEC(IKM,I) + SVEC2(IKM,I)
 350  CONTINUE
      DO 380 IK =1,NM,NSTEP
     IKM = IK
     IF (NSTEP .EQ. 2) IKM =(1+IK)/2
     DO 380 I = 1,NEQ
 380 SVEC(IKM,I) = SVEC2(IKM,I)
c    CALL CHECK(1)
```

```
      CALL RESULT
      WRITE(*,398)
 398  FORMAT(1X,'THE RESULTS HAVE BEEN OUTPUT')
      WRITE(*,*)


     CLOSE(1)
     CLOSE(2)
     CLOSE(3)
     STOP
     END

C ***************************************************
C  SUBROUTINE DATA READS INPUT DATA FROM DATA FILE.
C ***************************************************
     SUBROUTINE DATA
      IMPLICIT DOUBLE PRECISION (A - H, O - Z)
     PARAMETER (MJT = 10, MEQ = 190, MSZ = 3610, MOZ = 1296)
     PARAMETER (MFT = 4, MLD = 12, MBC = 20, MPF = 20)
     PARAMETER (MSP = 9, MFO = 6, MNP = 378)
     COMMON /B04/ NM, NSTEP, NFT, NJT,NST, NEQ, LHB, NSZ,NA1
     COMMON /B05/ XL, SPJT
     COMMON /B06/ EJT(MJT), GJT(MJT), BJT, HJT, AJT, RIY, RIZ, RIT
     COMMON /B07/ PTK, PEX, PEY, PG, PVXY, PVYX, PKX, PKY, PKV, PKG,
    1         PDX, PDY, PDV, PDG
     COMMON /B08/ CKPAL, CKPER, CKROT, SPC,XIN
     COMMON /B09/ X1LD(MLD), X2LD(MLD), Y1LD(MLD), Y2LD(MLD),
    1         PWLD(MLD),PPWLD(MLD),  JTLD(MLD), NWLD
     COMMON /B10/ XPTF(MPF), PTF(MPF),NPTF
     COMMON /B11/ IBC(MBC,2), NBC
     COMMON /B15/  EX(MSP),EY(MSP),EZ(MSP),NAN,NP,MNL
     COMMON /B17/  ICH(MSP,MNP),ICH1(MSP,MNP),SL(12),
    1          DDX,DDZ,FX,FZ,TOLL,NNA
     COMMON /B18/  SIGMAY,WDX1(MSP),WDX2(MSP),
    1          WDY1(MSP),WDY2(MSP),WDZ1(MSP),WDZ2(MSP)
     CHARACTER*72 NTITLE

C  INPUT DATA.


     READ (1,10) NTITLE
   10 FORMAT (A)
     READ (1,*) NM, NJT, ISYM

     NST=NJT-1
     READ (1,*) XL, SPJT
     READ (1,*) BJT, HJT
     READ (1,*) (EJT(I),I=1,NJT), REG
     BETA = (1.0 - (0.63 * BJT / HJT)) / 3.0
     AJT = BJT * HJT
     RIY = BJT * (HJT**3) / 12.0
```

```
      RIZ = HJT * (BJT**3) / 12.0
      RIT = BETA * HJT * (BJT**3)
      DO 20 I = 1, NJT
        GJT(I) = EJT(I) / REG
   20 CONTINUE

      READ (1,*) PTK,EMUX,EMUZ
      READ (1,*) PEX, PEY, PG, PVXY, PVYX
      PKX = (PEX * PTK**3) / (12.0D0 * (1.0D0 - (PVXY*PVYX)))
      PKY = PKX * PEY / PEX
      PKV = PVXY * PKX
      PKG = PG * (PTK**3) / 12.0D0
      PDX = (PEX * PTK) / (1.0D0 - (PVXY*PVYX))
      PDY = PDX * PEY / PEX
      PDV = PVXY * PDX
      PDG = PG * PTK

      READ (1,*) SPC, XIN,CKPAL, CKPER, CKROT
C ----------------------------
      READ(1,*) TAOSX,TAOSZ
      READ(1,*) NAN,NP,MNL
      IF ( NAN .EQ. 0)THEN
      WRITE(*,*)' ** ONLY LINEAR ELASTIC ANALYSIS IS REQUIRED **'
      WRITE(*,*)
      END IF

      READ(1,*) (EX(I), I=1,NST)
      READ(1,*) (EY(I), I=1,NST)
      READ(1,*) (EZ(I), I=1,NST)
c ****************************************
c Jan. 20,1992
c       eeexxx = ex(1)
c       eeezzz = ez(1)
c ****************************************
      READ (1,*) NWLD
      DO 150 I = 1, NWLD
      READ (1,*) JTLD(I), X1LD(I), X2LD(I), Y1LD(I), Y2LD(I), PPWLD(I)
  150 CONTINUE

      READ (1,*) NPTF
      IF (NPTF .NE. 0) THEN
      READ (1,*)ES,AS,DIT,RPAC
      DO 160 I = 1, NPTF
        READ (1,*) XPTF(I), PTF(I)
  160 CONTINUE
      END IF

      READ (1,*) NBC
      IF (NBC .NE. 0) THEN
        DO 170 I = 1, NBC
  170     READ (1,*) (IBC(I,J),J=1,2)
  180   CONTINUE
```

```
      END IF
C ------------------------------
      DDXL = (5.0*9.8)*EMUX/EX(1)
      DDZL = (5.0*9.8)*EMUZ/EZ(1)

      EXL = TAOSX *0.5*PTK*XL/(NP-1) /DDXL
      EZL = TAOSZ *0.5*PTK*XL/(NP-1) /DDZL

      FXL = EXL * DDXL
      FZL = EZL * DDZL
C ------------------------------

      IF (NPTF .NE. 0)THEN
      AW = PTK*XL/NPTF
      FS = PTF(1)
      SIGMAY = FS/AW


      FX = SIGMAY * EMUX *0.5*PTK*XL/(NP-1)
      FZ = SIGMAY * EMUZ *0.5*PTK*XL/(NP-1)

      IF ( FX .GT. FXL ) FX = FXL
      IF ( FZ .GT. FZL ) FZ = FZL

      DO 190 I = 1,NST

      EX(I) = EX(I)*SIGMAY*0.5*PTK*XL/(NP-1)/(5.0*9.8)
      EZ(I) = EZ(I)*SIGMAY*0.5*PTK*XL/(NP-1)/(5.0*9.8)

      IF ( EX(I) .GT. EXL ) EX(I) = EXL
      IF ( EZ(I) .GT. EZL ) EZ(I) = EZL
c ***********************************************
c Jan. 20.1992
c       IF ( EX(I) .LT. EEEXXX ) EX(I) = EEEXXX
c       IF ( EZ(I) .LT. EEEZZZ ) EZ(I) = EEEZZZ
c ***********************************************
 190  CONTINUE

      IF (EX(1) .NE. 0.0) DDX = FX/EX(1)
      IF (EZ(1) .NE. 0.0) DDZ = FZ/EZ(1)

      IF ( DDX .GT. DDXL ) DDX = DDXL
      IF ( DDZ .GT. DDZL ) DDZ = DDZL



      IF (EX(1) .EQ. 0.0) DDX = 0.0
      IF (EZ(1) .EQ. 0.0) DDZ = 0.0

      END IF
C ------------------------------------
      IF (NPTF .EQ. 0)THEN
```

```
      SIGMAY = 0.0
      FX = 0.0
      FZ = 0.0

      DO 191 I = 1,NST
      EX(I) = 0.0
      EZ(I) = 0.0
c ***********************************************
c Jan. 20,1992
c      IF ( EX(I) .LT. EEEXXX ) EX(I) = EEEXXX
c      IF ( EZ(I) .LT. EEEZZZ ) EZ(I) = EEEZZZ
c ***********************************************
 191  CONTINUE

      DDX = 0.0
      DDZ = 0.0

      END IF

C ------------------------------------------.
C TO CALCULATE THE NO. OF THE TURN OF THE POST TENSIONING CABLE
C ------------------------------------------.
      IF (NPTF .NE. 0)THEN
      TN = ( RFAC * FS * NJT * SPJT * ( 1/(ES*AS) + 1/(PEY*AW) ))/DIT
      END IF
C ------------------------------------.
C  SET PARAMETERS FOR PROBLEM SIZE AND TYPE.
C ------------------------------------.
      NEQ = NJT * 19
      LHB = 19
      NSZ  = 19 * NEQ
C ------------------------------.
      NA1 = 144 * NST
C ------------------------------.
      IF (ISYM  .EQ. 0) THEN
       NSTEP = 1
       NFT = NM
      ELSE IF (ISYM  .EQ. 1) THEN
       NSTEP = 2
       NFT = (NM + 1) / 2
      END IF

C  ECHOING INPUT DATA.

      WRITE(2,200) NTITLE
      WRITE(3,200) NTITLE
 200 FORMAT (/, 1X, 26('*'), ' FLOOR ANALYSIS PROGRAM ', 26('*'), //,
     1                 ' PROBLEM TITLE: ', A)
      WRITE(2,210) NJT, NFT, NM
      WRITE(3,210) NJT, NFT, NM
 210 FORMAT (/,' NUMBER OF FLOOR JOISTS          = ', I4, /,
     1        ' NUMBER OF FOURIER TERMS USED    = ', I4, /,
```

```
  2        ' MAX. ORDER OF FOURIER TERM      = ', I4   )

   WRITE(2,220)
220 FORMAT (//,' PROPERTIES AND DIMENSIONS OF JOISTS')
   WRITE(2,230) XL, SPJT, BJT, HJT
230 FORMAT (' JOIST SPAN       = ', E12.5, /,
  1       ' JOIST SPACING    = ', E12.5, /,
  2       ' JOIST WIDTH      = ', E12.5, /,
  3       ' JOIST DEPTH      = ', E12.5   )
   DO 245 I = 1, NJT
    WRITE (2,240) I, EJT(I), GJT(I)
240  FORMAT (' JOIST NO. =', I3, 2X, ' EJT =', E12.5, 2X,
  1        ' GJT =', E12.5)
245 CONTINUE

   WRITE(2,250)
250 FORMAT (//,' PROPERTIES AND DIMENSIONS OF PLATE COVER')
   WRITE(2,260) PTK
260 FORMAT (' COVER THICKNESS  = ', E12.5)
   WRITE(2,270) PKX, PKY, PKV, PKG
270 FORMAT (' KX = ', E12.5, 2X, ' KY = ', E12.5, /,
  1       ' KV = ', E12.5, 2X, ' KG = ', E12.5   )
   WRITE(2,280) PDX, PDY, PDV, PDG
280 FORMAT (' DX = ', E12.5, 2X, ' DY = ', E12.5, /,
  1       ' DV = ', E12.5, 2X, ' DG = ', E12.5   )


   WRITE(2,340)
340 FORMAT (//, ' PROPERTIES FOR CONNECTORS')
   WRITE(2,350) CKPAL, CKPER, CKROT
350 FORMAT (' STIFFNESS PARALLEL TO JOIST      = ', E12.5, /,
  1       ' STIFFNESS PERPENDICULAR TO JOIST  = ', E12.5, /,
  2       ' ROTATIONAL STIFFNESS FLANGE/JOIST = ', E12.5   )
   WRITE(2,360) SPC
360 FORMAT (' SPACING BETWEEN CONNECTORS       = ', E12.5, //)

   IF (NWLD .GT. 0) THEN
    WRITE(2,370)
370  FORMAT (' APPLIED TRANSVERSE LOADING')
    WRITE(2,380)
380  FORMAT (' JOIST', 6X, 'X1', 12X, 'X2', 12X, 'Y1', 12X, 'Y2',
  1        11X, 'LOAD')
    DO 390 I = 1, NWLD
390  WRITE (2,400) JTLD(I), X1LD(I), X2LD(I), Y1LD(I), Y2LD(I),
  1            PPWLD(I)
400  FORMAT (1X, I2, 5(2X,E12.5))
   END IF

   IF (NPTF .GT. 0) THEN
    WRITE (2,410)
410  FORMAT (' POST TENSIONING FORCES')
    WRITE (2,420)
```

```
 420  FORMAT (' X-LOC', 6X, 'FORCE')
      DO 430 I = 1, NPTF
 430  WRITE (2,435) XPTF(I), PTF(I)
 435  FORMAT (2(2X,E12.5))
      END IF
      IF (NPTF .EQ. 0)THEN
      WRITE(2,*)
      WRITE(2,*)'NO POST TENSIONING FORCE'
      END IF

      WRITE (2,440) NBC
 440 FORMAT (//' NO. OF BOUNDARY CONDITIONS = ', I4)
      IF (NBC .EQ. 0) GO TO 470
      DO 450 I = 1, NBC
 450 WRITE (2,460) (IBC(I,J),J=1,2)
 460 FORMAT (' JOIST NO. = ', I3, 3X, ' B.C. CODE NO. = ', I3)
 470 CONTINUE
C ------------------------------------
      NPP = NP*2
      WRITE(2,*)
      WRITE(2,*)'THREE DIMENSIONAL SPRING BETWEEN TWO T- BEAMS',NPP
      WRITE(2,*)
      WRITE(2,*)'STIFF. OF THE SPRING IN X-DIC.'
      DO 480 I = 1,NST
 480  WRITE (2,490) I,EX(I)
 490 FORMAT ('      JOINT NO. = ', I3, 3X, ' EX = ', E12.5)
      WRITE(2,*)'STIFF. OF THE SPRING IN Y-DIC.'
      DO 500 I = 1,NST
 500  WRITE (2,510) I,EY(I)
 510 FORMAT ('      JOINT NO. = ', I3, 3X, ' EY = ', E12.5)
      WRITE(2,*)'STIFF. OF THE SPRING IN Z-DIC.'
      DO 520 I = 1,NST
 520  WRITE (2,530) I,EZ(I)
 530 FORMAT ('      JOINT NO. = ', I3, 3X, ' EZ = ', E12.5)
      WRITE(2,540)EMUX
 540 FORMAT(1X,' FRICTION COEFFICIENT OF THE COVER (X-DIC.) =',E12.5)
      WRITE(2,543)EMUZ
 543 FORMAT(1X,' FRICTION COEFFICIENT OF THE COVER (Z-DIC.) =',E12.5)


      IF (NPTF .NE. 0)THEN
      WRITE(2,700)ES
      WRITE(2,705)AS
      WRITE(2,710)DIT
      WRITE(2,715)RFAC
      WRITE(2,720)TN
 700  FORMAT(1X,'STIFFNESS OF THE POSTENSIONING CABLE = ',E12.5)
 705  FORMAT(1X,'THE AREA OF THE POSTENSIONING CABLE = ',E12.5)
 710  FORMAT(1X,'THE DISTANCE BETWEEN THE CABLE TEETH = ',E12.5)
 715  FORMAT(1X,'THE RELAX FACTOR OF THE CABLE  = ',E12.5)
 720  FORMAT(1X,'THE TURN NO. REQUIRED   = ',E12.5)
```

```
      END IF

      RETURN
      END

C ***********************************************************************
C  SUBROUTINE GENTMX COMPUTES THE INTEGRALS REQUIRED IN THE DEVELOPMENT
C  OF THE ELEMENT STIFFNESS MATRIX NUMERICALLY USING SIX POINT GAUSS
C  QUADRATURE.
C ***********************************************************************
      SUBROUTINE GENMTX
      IMPLICIT DOUBLE PRECISION (A - H, O - Z)
      COMMON /B01/ RM00(19,19), RM22(19,19), RM02(19,19), RM20(19,19),
     1          RM33(19,19), RM66(19,19), RM36(19,19), RM63(19,19),
     2          RM44(19,19), RM45(19,19), RM54(19,19), RM55(19,19),
     3          RM11(19,19)
      COMMON /B02/ AA(19,19), RM(6,19), RM1(6,19)
      COMMON /B03/ ETA(6), GWT(6)
      DIMENSION ETA2(6), ETA3(6), ETA4(6), ETA5(6)

      CALL ZERO(RM, RM1)
      ETA(1) = 0.932469514203152D0
      ETA(2) = 0.661209386466265D0
      ETA(3) = 0.238619186083319D0
      ETA(4) = -ETA(3)
      ETA(5) = -ETA(2)
      ETA(6) = -ETA(1)
      GWT(1)  = 0.171324492379170D0
      GWT(2)  = 0.360761573048139D0
      GWT(3)  = 0.467913934572691D0
      GWT(4)  = GWT(3)
      GWT(5)  = GWT(2)
      GWT(6)  = GWT(1)
      DO 10 I = 1, 6
        ETA2(I) = ETA(I)  * ETA(I)
        ETA3(I) = ETA2(I) * ETA(I)
        ETA4(I) = ETA3(I) * ETA(I)
        ETA5(I) = ETA4(I) * ETA(I)
   10 CONTINUE

C  M0 AND M2 MATRICES.

      DO 20 I = 1, 6
        RM(I,1)  = ETA2(I) - (5.0D0 * ETA3(I) / 4.0D0)
     1           - (ETA4(I) / 2.0D0) + (3.0D0 * ETA5(I) / 4.0D0)
        RM(I,14) = ETA2(I) + (5.0D0 * ETA3(I) / 4.0D0)
     1           - (ETA4(I) / 2.0D0) - (3.0D0 * ETA5(I) / 4.0D0)
        RM(I,10) = 1.0D0 - (2.0D0 * ETA2(I)) + ETA4(I)
        RM(I,2)  = (ETA2(I) - ETA3(I) - ETA4(I) + ETA5(I)) / 8.0D0
        RM(I,15) = (-ETA2(I) - ETA3(I) + ETA4(I) + ETA5(I)) / 8.0D0
        RM(I,9)  = (ETA(I) - (2.0D0 * ETA3(I)) + ETA5(I)) / 2.0D0
```

```
      RM1(I,1)  = 2.0D0 - (15.0D0 * ETA(I) / 2.0D0)
     1          - (6.0D0 * ETA2(I)) + (15.0D0 * ETA3(I))
      RM1(I,14) = 2.0D0 + (15.0D0 * ETA(I) / 2.0D0)
     1          - (6.0D0 * ETA2(I)) - (15.0D0 * ETA3(I))
      RM1(I,10) = -4.0D0 + (12.0D0 * ETA2(I))
      RM1(I,2)  = (2.0D0 - (6.0D0 * ETA(I)) - (12.0D0 * ETA2(I))
     1          + (20.0D0 * ETA3(I))) / 8.0D0
      RM1(I,15) = (-2.0D0 - (6.0D0 * ETA(I)) + (12.0D0 * ETA2(I))
     1          + (20.0D0 * ETA3(I))) / 8.0D0
      RM1(I,9)  = ((-12.0D0 * ETA(I)) + (20.0D0 * ETA3(I))) / 2.0D0
   20 CONTINUE
      CALL DMAT(1)
      DO 40 I = 1, 19
       DO 30 J = 1, 19
        RM00(I,J) = AA(I,J)
   30  CONTINUE
   40 CONTINUE
      CALL DMAT(2)
      DO 60 I = 1, 19
       DO 50 J = 1, 19
        RM22(I,J) = AA(I,J)
   50  CONTINUE
   60 CONTINUE
      CALL DMAT(3)
      DO 80 I = 1, 19
       DO 70 J = 1, 19
        RM02(I,J) = AA(I,J)
   70  CONTINUE
   80 CONTINUE
      CALL DMAT(4)
      DO 100 I = 1, 19
       DO 90 J = 1, 19
        RM20(I,J) = AA(I,J)
   90  CONTINUE
  100 CONTINUE
      CALL ZERO(RM, RM1)

C  M3 AND M6 MATRICES.

      DO 110 I = 1, 6
       RM(I,3)   = (-3.0D0 * ETA(I) / 4.0D0) + ETA2(I)
     1          + (ETA3(I) / 4.0D0) - (ETA4(I) / 2.0D0)
       RM(I,16)  = (3.0D0 * ETA(I) / 4.0D0) + ETA2(I)
     1          - (ETA3(I) / 4.0D0)- (ETA4(I) / 2.0D0)
       RM(I,7)   = 1.0D0 - (2.0D0 * ETA2(I)) + ETA4(I)
       RM(I,4)   = (-ETA(I) + ETA2(I) + ETA3(I) - ETA4(I)) / 8.0D0
       RM(I,17)  = (-ETA(I) - ETA2(I) + ETA3(I) + ETA4(I)) / 8.0D0
       RM1(I,5)  = (-3.0D0 / 4.0D0) + (2.0D0 * ETA(I))
     1          + (3.0D0 * ETA2(I) / 4.0D0) - (2.0D0 * ETA3(I))
       RM1(I,18) = ( 3.0D0 / 4.0D0) + (2.0D0 * ETA(I))
     1          - (3.0D0 * ETA2(I) / 4.0D0) - (2.0D0 * ETA3(I))
       RM1(I,8)  = (-4.0D0 * ETA(I)) + 4.0D0 * ETA3(I)
```

```
      RM1(I,6)  = (-1.0D0 + (2.0D0 * ETA(I)) + (3.0D0 * ETA2(I))
     1          - (4.0D0 * ETA3(I))) / 8.0D0
      RM1(I,19) = (-1.0D0 - (2.0D0 * ETA(I)) + (3.0D0 * ETA2(I))
     1          + (4.0D0 * ETA3(I))) / 8.0D0
  110 CONTINUE
      CALL DMAT(1)
      DO 130 I = 1, 19
       DO 120 J = 1, 19
        RM33(I,J) = AA(I,J)
  120   CONTINUE
  130 CONTINUE
      CALL DMAT(2)
      DO 150 I = 1, 19
       DO 140 J = 1, 19
        RM66(I,J) = AA(I,J)
  140   CONTINUE
  150 CONTINUE
      CALL DMAT(3)
      DO 170 I = 1, 19
       DO 160 J = 1, 19
        RM36(I,J) = AA(I,J)
  160   CONTINUE
  170 CONTINUE
      CALL DMAT(4)
      DO 190 I = 1, 19
       DO 180 J = 1, 19
        RM63(I,J) = AA(I,J)
  180   CONTINUE
  190 CONTINUE

C  M5 AND M4 MATRICES.

      DO 200 I = 1, 6
       RM(I,5)   = RM(I,3)
       RM(I,3)   = 0.0D0
       RM(I,18)  = RM(I,16)
       RM(I,16)  = 0.0D0
       RM(I,8)   = RM(I,7)
       RM(I,7)   = 0.0D0
       RM(I,6)   = RM(I,4)
       RM(I,4)   = 0.0D0
       RM(I,19)  = RM(I,17)
       RM(I,17)  = 0.0D0
       RM1(I,3)  = RM1(I,5)
       RM1(I,5)  = 0.0D0
       RM1(I,16) = RM1(I,18)
       RM1(I,18) = 0.0D0
       RM1(I,7)  = RM1(I,8)
       RM1(I,8)  = 0.0D0
       RM1(I,4)  = RM1(I,6)
       RM1(I,6)  = 0.0D0
       RM1(I,17) = RM1(I,19)
```

```
      RM1(I,19) = 0.0D0
 200 CONTINUE
    CALL DMAT(2)
    DO 220 I = 1, 19
      DO 210 J = 1, 19
        RM44(I,J) = AA(I,J)
 210    CONTINUE
 220 CONTINUE
    CALL DMAT(4)
    DO 240 I = 1, 19
      DO 230 J = 1, 19
        RM45(I,J) = AA(I,J)
 230    CONTINUE
 240 CONTINUE
    CALL DMAT(3)
    DO 260 I = 1, 19
      DO 250 J = 1, 19
        RM54(I,J) = AA(I,J)
 250    CONTINUE
 260 CONTINUE
    CALL DMAT(1)
    DO 280 I = 1, 19
      DO 270 J = 1, 19
        RM55(I,J) = AA(I,J)
 270    CONTINUE
 280 CONTINUE
    CALL ZERO(RM, RM1)

C  M1 MATRIX.

    DO 290 I = 1, 6
      RM(I,1)  = (2.0D0 * ETA(I)) - (15.0D0 * ETA2(I) / 4.0D0)
     1         - (2.0D0 * ETA3(I)) + (15.0D0 * ETA4(I) / 4.0D0)
      RM(I,14) = (2.0D0 * ETA(I)) + (15.0D0 * ETA2(I) / 4.0D0)
     1         - (2.0D0 * ETA3(I)) - (15.0D0 * ETA4(I) / 4.0D0)
      RM(I,10) = (-4.0D0 * ETA(I)) + (4.0D0 * ETA3(I))
      RM(I,2)  = (( 2.0D0 * ETA(I)) - (3.0D0 * ETA2(I))
     1         - (4.0D0 * ETA3(I)) + (5.0D0 * ETA4(I))) / 8.0D0
      RM(I,15) = ((-2.0D0 * ETA(I)) - (3.0D0 * ETA2(I))
     1         + (4.0D0 * ETA3(I)) + (5.0D0 * ETA4(I))) / 8.0D0
      RM(I,9)  = (1.0D0 - (6.0D0 * ETA2(I))
     1         + (5.0D0 * ETA4(I))) / 2.0D0
 290 CONTINUE
    CALL DMAT(1)
    DO 310 I = 1, 19
      DO 300 J = 1, 19
        RM11(I,J) = AA(I,J)
 300    CONTINUE
 310 CONTINUE
    RETURN
    END
```

```
C ************************************
C  SUBROUTINE ZERO CALLED BY GENMTX.
C ************************************
      SUBROUTINE ZERO
       IMPLICIT DOUBLE PRECISION (A - H, O - Z)
      COMMON /B02/ AA(19,19), RM(6,19), RM1(6,19)

      DO 20 I = 1, 6
        DO 10 J = 1, 19
          RM(I,J)  = 0.0D0
          RM1(I,J) = 0.0D0
   10   CONTINUE
   20 CONTINUE
      RETURN
      END

C ************************************
C  SUBROUTINE DMAT CALLED BY GENMTX.
C ************************************
      SUBROUTINE DMAT (II)
       IMPLICIT DOUBLE PRECISION (A - H, O - Z)
      COMMON /B02/ AA(19,19), RM(6,19), RM1(6,19)
      COMMON /B03/ ETA(6), GWT(6)

      DO 20 I = 1, 19
        DO 10 J = 1, 19
          AA(I,J) = 0.0D0
   10   CONTINUE
   20 CONTINUE
      DO 50 I = 1, 6
        DO 40 J = 1, 19
          F1 = RM(I,J)
          IF (II .EQ. 2 .OR. II .EQ. 4) F1 = RM1(I,J)
          IF (F1 .NE. 0.0) THEN
            DO 30 K = 1, 19
              F2 = RM1(I,K)
              IF (II .EQ. 1 .OR. II .EQ. 4) F2 = RM(I,K)
                IF (F2 .NE. 0.0) THEN
                  AA(J,K) = AA(J,K) + F1 * F2 * GWT(I)
                END IF
   30       CONTINUE
          END IF
   40   CONTINUE
   50 CONTINUE
      RETURN
      END

C ****************************************************************
C  SUBROUTINE COVCON COMPUTES THE STIFFNESS MATRIX FOR THE PLATE COVER
C  AND CONNECTORS ASSOCIATED WITH A GIVEN T-BEAM STRIP.
C ****************************************************************
      SUBROUTINE COVCON (IN,IK)
```

```
      IMPLICIT DOUBLE PRECISION (A - H, O - Z)
      PARAMETER (MJT = 10, MEQ = 190, MSZ = 3610, MOZ = 1296)
      PARAMETER (MFT = 4, MLD = 12, MBC = 20, MPF = 20)
      PARAMETER (MSP = 9, MFO = 6, MNP = 378)
      COMMON /B00/ PI, PI2, PI4, TOL
      COMMON /B01/ RM00(19,19), RM22(19,19), RM02(19,19), RM20(19,19),
     1          RM33(19,19), RM66(19,19), RM36(19,19), RM63(19,19),
     2          RM44(19,19), RM45(19,19), RM54(19,19), RM55(19,19),
     3          RM11(19,19)
      COMMON /B03/ ETA(6), GWT(6)
      COMMON /B04/ NM, NSTEP, NFT, NJT,NST, NEQ, LHB, NSZ,NA1
      COMMON /B05/ XL, SPJT
      COMMON /B06/ EJT(MJT), GJT(MJT), BJT, HJT, AJT, RIY, RIZ, RIT
      COMMON /B07/ PTK, PEX, PEY, PG, PVXY, PVYX, PKX, PKY, PKV, PKG,
     1          PDX, PDY, PDV, PDG
      COMMON /B08/ CKPAL, CKPER, CKROT, SPC,XIN
      COMMON /B12/ ESTIF(19,19)
      COMMON /B17/  ICH(MSP,MNP),ICH1(MSP,MNP),SL(12),
     1           DDX,DDZ,FX,FZ,TOLL,NNA
      DIMENSION    AD(19,19)

      DO 20 I = 1, 19
        DO 10 J = 1, 19
          ESTIF(I,J) = 0.0
   10   CONTINUE
   20 CONTINUE

C  CONTRIBUTION FROM THE PLATE COVER.

      FAC = 0.0
      IF (IN .EQ. IK) FAC = PKX * (IK**4) * PI4 * SPJT / (4.0*XL**3)
      DO 60 I = 1, 19
        DO 50 J = 1, 19
          AD(I,J) = RM00(I,J)
   50   CONTINUE
   60 CONTINUE
      CALL ADD(AD, FAC)
C ------------------------------------
      FAC = 0.0
      IF (IN .EQ. IK) FAC = PKY * 4.0 * XL / (SPJT**3)
      DO 100 I = 1, 19
        DO 90 J = 1, 19
          AD(I,J) = RM22(I,J)
   90   CONTINUE
  100 CONTINUE
      CALL ADD(AD, FAC)
C ------------------------------------
      FAC = 0.0
      IF (IN .EQ. IK) FAC = -PKV * PI2 / (SPJT*XL)
      FAC1 = FAC * (IK**2)
      DO 140 I = 1, 19
        DO 130 J = 1, 19
```

```
      AD(I,J) = RM02(I,J)
 130  CONTINUE
 140 CONTINUE
    CALL ADD(AD, FAC1)
C ------------------------------
    FAC1 = FAC * (IN**2)
    DO 160 I = 1, 19
     DO 160 J = 1, 19
      AD(I,J) = RM20(I,J)
 150  CONTINUE
 160 CONTINUE
    CALL ADD(AD, FAC1)
C ------------------------------
    FAC = 0.0
    IF (IN .EQ. IK) FAC = PKG * 4.0 * PI2 * (IK**2) / (SPJT*XL)
    DO 200 I = 1, 19
     DO 190 J = 1, 19
      AD(I,J) = RM11(I,J)
 190  CONTINUE
 200 CONTINUE
    CALL ADD(AD, FAC)
C ------------------------------
    FAC = 0.0
    IF (IN .EQ. IK) FAC = PDX * SPJT * PI2 * (IK**2) / (4.0*XL)
    DO 240 I = 1, 19
     DO 230 J = 1, 19
      AD(I,J) = RM33(I,J)
 230  CONTINUE
 240 CONTINUE
    CALL ADD(AD, FAC)
C ------------------------------
    FAC = 0.0
    IF (IN .EQ. IK) FAC = PDY * XL / SPJT
    DO 280 I = 1, 19
     DO 270 J = 1, 19
      AD(I,J) = RM66(I,J)
 270  CONTINUE
 280 CONTINUE
    CALL ADD(AD, FAC)
C ------------------------------
    FAC = 0.0
    IF (IN .EQ. IK) FAC = -PDV * PI / 2.0
    FAC1 = FAC * IK
    DO 320 I = 1, 19
     DO 310 J = 1, 19
      AD(I,J) = RM36(I,J)
 310  CONTINUE
 320 CONTINUE
    CALL ADD(AD, FAC1)
C ------------------------------
    FAC1 = FAC * IN
    DO 340 I = 1, 19
```

```
      DO 330 J = 1, 19
        AD(I,J) = RM63(I,J)
 330  CONTINUE
 340 CONTINUE
     CALL ADD(AD, FAC1)
C ------------------------------
     FAC = 0.0
     IF (IN .EQ. IK) FAC = PDG * XL * SPJT / 4.0
     FAC1 = FAC * 4.0 / (SPJT**2)
     DO 380 I = 1, 19
       DO 370 J = 1, 19
        AD(I,J) = RM44(I,J)
 370  CONTINUE
 380 CONTINUE
     CALL ADD(AD, FAC1)
C ------------------------------
     FAC1 = FAC * 2.0 * IN * PI / (SPJT*XL)
     DO 400 I = 1, 19
       DO 390 J = 1, 19
        AD(I,J) = RM45(I,J)
 390  CONTINUE
 400 CONTINUE
     CALL ADD(AD, FAC1)
C ------------------------------
     FAC1 = FAC * 2.0 * IK * PI / (SPJT*XL)
     DO 420 I = 1, 19
       DO 410 J = 1, 19
        AD(I,J) = RM54(I,J)
 410  CONTINUE
 420 CONTINUE
     CALL ADD(AD, FAC1)
C ------------------------------
     FAC1 = FAC * IK * IN * PI2 / (XL**2)
     DO 440 I = 1, 19
       DO 430 J = 1, 19
        AD(I,J) = RM55(I,J)
 430  CONTINUE
 440 CONTINUE
     CALL ADD(AD, FAC1)

C CONTRIBUTION FROM THE COVER-TO-STIFFENER CONNECTORS.

     DO 460 I = 1, 6
       DO 450 J = 1, 19
        AD(I,J) = 0.0
 450  CONTINUE
 460 CONTINUE
     AD(1,7)  =  1.0
     AD(1,11) = -1.0
     AD(1,10) = -IK * PI * (HJT + PTK) / (2.0*XL)
     AD(2,7)  =  1.0
     AD(2,11) = -1.0
```

```
      AD(2,10) = -IN * PI * (HJT + PTK) / (2.0*XL)
      AD(3,8)  =  1.0
      AD(3,12) = -1.0
      AD(3,9)  = -PTK / (2.0*SPJT)
      AD(3,13) = -HJT / (2.0*SPJT)
      AD(4,8)  = 1.0
      AD(4,12) = -1.0
      AD(4,9)  = -PTK / (2.0*SPJT)
      AD(4,13) = -HJT / (2.0*SPJT)
      AD(5,9)  = 1.0 / SPJT
      AD(5,13) = -1.0 / SPJT
      AD(6,9)  = 1.0 / SPJT
      AD(6,13) = -1.0 / SPJT
C ---------------------------
      IF (IN .NE. IK) GO TO 510
      SPAR = XL / (2.0*SPC)
      SPER = XL / (2.0*SPC)
      SROT = SPER
      GO TO 520
  510 SPAR = 0.0
      SPER = 0.0
      SROT = 0.0
  520 SPAR = SPAR * CKPAL
      SPER = SPER * CKPER
      SROT = SROT * CKROT
C ---------------------------------
      DO 540 I = 1, 19
       DO 530 J = 1, 19
        ESTIF(I,J) = ESTIF(I,J) + (SPAR * AD(1,I) * AD(2,J))
     1                          + (SPER * AD(3,I) * AD(4,J))
     2                          + (SROT * AD(5,I) * AD(6,J))
  530  CONTINUE
  540 CONTINUE
      RETURN
      END

C ************************************************************
C FUNCTION  Z  IS USED TO CALCULATE  Ix( n,m,i)
C ************************************************************
      FUNCTION Z(N, M, Z1, Z0, XL, NX, PI)
       IMPLICIT DOUBLE PRECISION (A - H, O -Z)
      IF (N .EQ. M) GO TO 20
      S1 = DSIN((N - M)*PI*Z1/XL)
      S2 = DSIN((N - M)*PI*Z0/XL)
      S3 = DSIN((N + M)*PI*Z1/XL)
      S4 = DSIN((N + M)*PI*Z0/XL)
      D1 = (S1 - S2)/ (2.0*(N - M))
      D2 = (S3 - S4) / (2.0*(N+M))
      IF (NX .EQ. 1) GO TO 10
      Z = XL *(D1- D2) /PI
      RETURN
   10 Z = XL * (D1 + D2 )/PI
```

```
      RETURN
   20 S1 = DSIN(2.0*N*PI*Z1/XL)
      S2 = DSIN(2.0*N*PI*Z0/XL)
      D1 = PI * ( Z1 - Z0)/(2.0*XL)
      D2 = (S1 - S2) / (4.0*N)
      IF (NX .EQ. 1 ) GO TO 30
      Z = XL * (D1 - D2)/PI
      RETURN
   30 Z = XL * (D1 + D2)/PI
      RETURN
      END

C ***************************************************************
C  SUBROUTINE ADD, WHICH IS CALLED BY SUBROUTINE COVCON, BUILDS THE
C  STIFFNESS AND MASS MATRICES ASSOCIATED WITH THE PLATE COVER
C  AND THE CONNECTORS FOR A GIVEN T-BEAM STRIP.
C ***************************************************************
      SUBROUTINE ADD (AD, FAC)
       IMPLICIT DOUBLE PRECISION (A - H, O - Z)
      COMMON /B12/ ESTIF(19,19)
      DIMENSION    AD(19,19)

      IF (FAC .EQ. 0.0D0) RETURN
      DO 20 I = 1, 19
       DO 10 J = 1, 19
        ESTIF(I,J) = ESTIF(I,J) + (FAC * AD(I,J))
   10  CONTINUE
   20 CONTINUE
      RETURN
      END

C ***************************************************************
C  SUBROUTINE ASMBLY ASSEMBLES THE DIAGONAL STIFFNESS SUB-MATRICES
C  FOR EACH FOURIER TERM.  GSTIF(IKO,JK)  AND  ASTIF(IKO,JK)
C ***************************************************************
      SUBROUTINE ASMBLY
       IMPLICIT DOUBLE PRECISION (A - H, O - Z)
      PARAMETER (MJT = 10, MEQ = 190, MSZ = 3610, MOZ = 1296)
      PARAMETER (MFT = 4, MLD = 12, MBC = 20, MPF = 20)
      PARAMETER (MSP = 9, MFO = 6, MNP = 378)
      COMMON /B00/ PI, PI2, PI4, TOL
      COMMON /B04/ NM, NSTEP, NFT, NJT,NST, NEQ, LHB, NSZ,NA1
      COMMON /B05/ XL, SPJT
      COMMON /B06/ EJT(MJT), GJT(MJT), BJT, HJT, AJT, RIY, RIZ, RIT
      COMMON /B07/ PTK, PEX, PEY, PG, PVXY, PVYX, PKX, PKY, PKV, PKG,
     1          PDX, PDY, PDV, PDG
      COMMON /B11/ IBC(MBC,2), NBC
      COMMON /B12/ ESTIF(19,19)
      COMMON /B13/ GSTIF(MFT,MSZ),  ASTIF(MFO,MOZ),
     1          XF(MFT,MEQ),FF(MFT,MEQ),RFP(MFT,MEQ),SVEC(MFT,MEQ),
     3          SVEC1(MFT,MEQ),SVEC2(MFT,MEQ),XFX(MFT,MEQ),EK(8,8)
      COMMON /B14/  XK(8,8),YK(8,8),ZK(8,8),
```

```
     1          BX1(1,8),BX2(1,8),BY1(1,8),BY2(1,8),
     2          BZ1(1,8),BZ2(1,8),BX1T(8,1),BX2T(8,1),BY1T(8,1),
     3          BY2T(8,1),BZ1T(8,1),BZ2T(8,1),SXK(8,8),
     4          SYK(8,8),SZK(8,8),EK12(12,12)
      COMMON /B15/  EX(MSP),EY(MSP),EZ(MSP),NAN,NP,MNL
      COMMON /B17/  ICH(MSP,MNP),ICH1(MSP,MNP),SL(12),
     1          DDX,DDZ,FX,FZ,TOLL,NNA

      DO 60 IK = 1, NM, NSTEP
      DO 55 IN = 1,IK,NSTEP
       IKM = IK
       INM = IN
       IF (NSTEP .EQ. 2) THEN
       IKM = (IK + 1)/2
       INM = (IN + 1)/2
       END IF
C ----------------------------
      IF (IN .NE. IK) THEN
      IKO = (INM - 1) *NFT + IKM - INM* (INM + 1)/2
      DO 5 I = 1, NA1
    5 ASTIF(IKO,I)= 0.0


       DO 20 IE = 1,NJT
       IJ = (IE - 1)*19

       IF (IE .LE. NST ) THEN
       CALL STIF12(IE,IN,JK)


C          FBC39.F  NOV. 8,1991
C ----------------------------------.
       IF ( NBC .NE. 0 ) THEN
       CALL ABC(IKO,IE)
       END IF

       IJ = ( IE - 1 ) * 12
       DO 17 J = 1,12
       DO 17 K = 1,12
       JK = ( IJ + J - 1 ) * 12 + K
       ASTIF(IKO,JK) = ASTIF(IKO,JK) + EK12(J,K)
   17  CONTINUE
C ----------------------------------.

      END IF
   20 CONTINUE
      END IF
C ----------------------------
      IF ( IN .EQ. IK ) THEN
       IKO = IKM
       FAC2 = (IK**2) * PI2 / (2.0D0 * XL)
       FAC4 = (IK**4) * PI4 / (2.0D0 * (XL**3))
```

```
      DO 25 I = 1, NSZ
       GSTIF(IKO,I) = 0.0D0
 25   CONTINUE

C  CONTRIBUTION FROM THE PLATE COVER AND CONNECTORS.

      CALL COVCON (IN,IK)
      DO 50 IE = 1, NJT
       IJ = (IE - 1) * 19
       DO 40 J = 1, 19
        DO 30 K = 1, J
         JK = LHB * (IJ + K - 1) + J - K + 1
         GSTIF(IKO,JK) = GSTIF(IKO,JK) + ESTIF(J,K)
 30      CONTINUE
 40    CONTINUE

C  CONTRIBUTION FROM THE JOISTS.

       JK = LHB * (IJ + 9) + 1
       GSTIF(IKO,JK) = GSTIF(IKO,JK) + (EJT(IE) * RIY * FAC4)
       JK = LHB * (IJ + 10) + 1
       GSTIF(IKO,JK) = GSTIF(IKO,JK) + (EJT(IE) * AJT * FAC2)
       JK = LHB * (IJ + 11) + 1
       GSTIF(IKO,JK) = GSTIF(IKO,JK) + (EJT(IE) * RIZ * FAC4)
       JK = LHB * (IJ + 12) + 1
       GSTIF(IKO,JK) = GSTIF(IKO,JK) + (GJT(IE) * RIT * FAC2 /
     1                          (SPJT**2))
      IF (IE .LE. NST ) THEN
      CALL STIF12(IE,IN,IK)
      IJ=(IE-1)*19+13
      DO 45 J=1,12
      DO 45 K=1,J
      JK=LHB*(IJ+K-1)+J-K+1
      GSTIF(IKO,JK) = GSTIF(IKO,JK) + EK12(J,K)
 45   CONTINUE
      END IF
 50   CONTINUE
      END IF
 55   CONTINUE
 60 CONTINUE
     RETURN
     END


C ***************************************************************
C THIS SUBROUTINE GENERATES THE STIFNESS MATRICES OF THE JOINT
C ELEMENT BETWEEN THE T-BEAM STRIP.
C ***************************************************************
      SUBROUTINE STIF12 (IE,IN,IK)
      IMPLICIT DOUBLE PRECISION (A - H, O - Z)
      PARAMETER (MJT = 10, MEQ = 190, MSZ = 3610, MOZ = 1296)
      PARAMETER (MFT = 4, MLD = 12, MBC = 20, MPF = 20)
```

```
      PARAMETER (MSP = 9, MFO = 6, MNP = 378)
      COMMON /B00/ PI, PI2, PI4, TOL
      COMMON /B04/ NM, NSTEP, NFT, NJT,NST, NEQ, LHB, NSZ,NA1
      COMMON /B05/ XL, SPJT
      COMMON /B07/ PTK, PEX, PEY, PG, PVXY, PVYX, PKX, PKY, PKV, PKG,
     1          PDX, PDY, PDV, PDG
      COMMON /B13/ GSTIF(MFT,MSZ), ASTIF(MFO,MOZ),
     1          XF(MFT,MEQ),FF(MFT,MEQ),RFF(MFT,MEQ),SVEC(MFT,MEQ),
     3          SVEC1(MFT,MEQ),SVEC2(MFT,MEQ),XFX(MFT,MEQ),EK(8,8)
      COMMON /B14/  XK(8,8),YK(8,8),ZK(8,8),
     1           BX1(1,8),BX2(1,8),BY1(1,8),BY2(1,8),
     2           BZ1(1,8),BZ2(1,8),BX1T(8,1),BX2T(8,1),BY1T(8,1),
     3           BY2T(8,1),BZ1T(8,1),BZ2T(8,1),SXK(8,8),
     4           SYK(8,8),SZK(8,8),EK12(12,12)
      COMMON /B15/  EX(MSP),EY(MSP),EZ(MSP),NAN,NP,MNL
      COMMON /B17/  ICH(MSP,MNP),ICH1(MSP,MNP),SL(12),
     1           DDX,DDZ,FX,FZ,TOLL,NNA

      M=IK
      N=IN
C ------------------------------------------
      DO 20 J=1,8
       BX1(1,J)=0.0
       BX2(1,J)=0.0
       BY1(1,J)=0.0
       BY2(1,J)=0.0
       BZ1(1,J)=0.0
       BZ2(1,J)=0.0
        BX1T(J,1)=0.0
        BX2T(J,1)=0.0
        BY1T(J,1)=0.0
        BY2T(J,1)=0.0
        BZ1T(J,1)=0.0
        BZ2T(J,1)=0.0
   20 CONTINUE
      CALL BX(N,M,IE)
      CALL BY(N,M,IE)
      CALL BZ(N,M,IE)
      DO 60 I=1,8
        DO 60 J=1,8
        EK(I,J)=SXK(I,J)+SYK(I,J)+SZK(I,J)
   60 CONTINUE
      CALL EXP
      RETURN
      END

C ***********************************************************
C THE CONTRIBUTION OF THE SPRING IN  X  DIC. CALLED BY STIF12
C ***********************************************************
      SUBROUTINE BX (N,M,IE)
       IMPLICIT DOUBLE PRECISION (A - H, O - Z)
      PARAMETER (MJT = 10, MEQ = 190, MSZ = 3610, MOZ = 1296)
```

```
      PARAMETER (MFT = 4, MLD = 12, MBC = 20, MPF = 20)
      PARAMETER (MSP = 9, MFO = 6, MNP = 378)
      COMMON /B00/ PI, PI2, PI4, TOL
      COMMON /B04/ NM, NSTEP, NFT, NJT,NST, NEQ, LHB, NSZ,NA1
      COMMON /B05/ XL, SPJT
      COMMON /B07/ PTK, PEX, PEY, PG, PVXY, PVYX, PKX, PKY, PKV, PKG,
     1          PDX, PDY, PDV, PDG
      COMMON /B13/ GSTIF(MFT,MSZ),  ASTIF(MFO,MOZ),
     1          XF(MFT,MEQ),FF(MFT,MEQ),RFF(MFT,MEQ),SVEC(MFT,MEQ),
     3          SVEC1(MFT,MEQ),SVEC2(MFT,MEQ),XFX(MFT,MEQ),EK(8,8)
      COMMON /B14/  XK(8,8),YK(8,8),ZK(8,8),
     1           BX1(1,8),BX2(1,8),BY1(1,8),BY2(1,8),
     2           BZ1(1,8),BZ2(1,8),BX1T(8,1),BX2T(8,1),BY1T(8,1),
     3           BY2T(8,1),BZ1T(8,1),BZ2T(8,1),SXK(8,8),
     4           SYK(8,8),SZK(8,8),EK12(12,12)
      COMMON /B15/  EX(MSP),EY(MSP),EZ(MSP),NAN,NP,MNL
      COMMON /B17/  ICH(MSP,MNP),ICH1(MSP,MNP),SL(12),
     1           DDX,DDZ,FX,FZ,TOLL,NNA

      DO 10 I=1,8
      DO 10 J=1,8
   10 SXK(I,J)=0.0
      DO 100 I=1,NP
      DX=XL/(NP-1)
      IF ( I.EQ.1 .OR. I.EQ.NP ) DX=0.5*XL/(NP-1)
      XI=(I-1)*XL/(NP-1)

      BX1(1,1)=PTK/2.*(M*PI/XL)*DCOS(M*PI*XI/XL)
      BX1(1,3)=-DCOS(M*PI*XI/XL)
      BX1(1,5)=-PTK/2.*(M*PI/XL)*DCOS(M*PI*XI/XL)
      BX1(1,7)=DCOS(M*PI*XI/XL)

      KX1 = (I-1)*6 + 1
C ------------------------------------
      BX1T(1,1)=PTK/2.*(N*PI/XL)*DCOS(N*PI*XI/XL)*EX(IE)
     1        *ICH(IE,KX1)
      BX1T(3,1)=-DCOS(N*PI*XI/XL)*EX(IE)
     1        *ICH(IE,KX1)
      BX1T(5,1)=-PTK/2.*(N*PI/XL)*DCOS(N*PI*XI/XL)*EX(IE)
     1        *ICH(IE,KX1)
      BX1T(7,1)=DCOS(N*PI*XI/XL)*EX(IE)
     1        *ICH(IE,KX1)

      BX2(1,1)=-PTK/2.*(M*PI/XL)*DCOS(M*PI*XI/XL)
      BX2(1,3)=-DCOS(M*PI*XI/XL)
      BX2(1,5)=PTK/2.*(M*PI/XL)*DCOS(M*PI*XI/XL)
      BX2(1,7)=DCOS(M*PI*XI/XL)

      KX2 = (I - 1)*6 + 2
C ------------------------------------
      BX2T(1,1)=-PTK/2.*(N*PI/XL)*DCOS(N*PI*XI/XL)*EX(IE)
     1        *ICH(IE,KX2)
```

```
      BX2T(3,1)=-DCOS(N*PI*XI/XL)*EX(IE)
     1        *ICH(IE,KX2)
      BX2T(5,1)=PTK/2.*(N*PI/XL)*DCOS(N*PI*XI/XL)*EX(IE)
     1        *ICH(IE,KX2)
      BX2T(7,1)=DCOS(N*PI*XI/XL)*EX(IE)
     1        *ICH(IE,KX2)

      CALL DGMULT (BX1T,BX1,XK,8,1,8,8,1,8)
      DO 20 I1=1,8
       DO 20 J=1,8
   20 SXK(I1,J)=SXK(I1,J)+XK(I1,J)
      CALL DGMULT (BX2T,BX2,XK,8,1,8,8,1,8)
      DO 30 I1=1,8
       DO 30 J=1,8
   30 SXK(I1,J)=SXK(I1,J)+XK(I1,J)
  100 CONTINUE
      RETURN
      END


C ***********************************************************
C THE CONTRIBUTION OF THE SPRING IN  Y  DIC. CALLED BY STIF12
C ***********************************************************
      SUBROUTINE BY (N,M,IE)
       IMPLICIT DOUBLE PRECISION (A - H, O - Z)
      PARAMETER (MJT = 10, MEQ = 190, MSZ = 3610, MOZ = 1296)
      PARAMETER (MFT = 4, MLD = 12, MBC = 20, MPF = 20)
      PARAMETER (MSP = 9, MFO = 6, MNP = 378)
      COMMON /B00/ PI, PI2, PI4, TOL
      COMMON /B04/ NM, NSTEP, NFT, NJT,NST, NEQ, LHB, NSZ,NA1
      COMMON /B05/ XL, SPJT
      COMMON /B07/ PTK, PEX, PEY, PG, PVXY, PVYX, PKX, PKY, PKV, PKG,
     1         PDX, PDY, PDV, PDG
      COMMON /B13/ GSTIF(MFT,MSZ). ASTIF(MFO,MOZ),
     1         XF(MFT,MEQ),FF(MFT,MEQ),RFF(MFT,MEQ),SVEC(MFT,MEQ),
     3         SVEC1(MFT,MEQ),SVEC2(MFT,MEQ),XFX(MFT,MEQ),EK(8,8)
      COMMON /B14/  XK(8,8),YK(8,8),ZK(8,8),
     1          BX1(1,8),BX2(1,8),BY1(1,8),BY2(1,8),
     2          BZ1(1,8),BZ2(1,8),BX1T(8,1),BX2T(8,1),BY1T(8,1),
     3          BY2T(8,1),BZ1T(8,1),BZ2T(8,1),SXK(8,8),
     4          SYK(8,8),SZK(8,8),EK12(12,12)
      COMMON /B15/  EX(MSP),EY(MSP),EZ(MSP),NAN,NP,MNL
      COMMON /B17/  ICH(MSP,MNP),ICH1(MSP,MNP),SL(12),
     1          DDX,DDZ,FX,FZ,TOLL,NNA

      DO 10 I=1,8
      DO 10 J=1,8
   10 SYK(I,J)=0.0
      DO 100 I=1,NP
      DX=XL/(NP-1)
      IF ( I.EQ.1 .OR. I.EQ.NP ) DX=0.5*XL/(NP-1)
      XI=(I-1)*XL/(NP-1)
```

```
      BY1(1,2)=PTK/(2.*SPJT)*DSIN(M*PI*XI/XL)
      BY1(1,4)=-DSIN(M*PI*XI/XL)
      BY1(1,6)=-PTK/(2.*SPJT)*DSIN(M*PI*XI/XL)
      BY1(1,8)=DSIN(M*PI*XI/XL)

      KY1 = (I - 1) *6 + 3
      IF(ICH(IE,KY1) .EQ. 1) EKY1 = 1.00*EY(IE)
      IF(ICH(IE,KY1) .EQ. -1) EKY1 = 1.00 * 1.00E+10
      IF(ICH(IE,KY1) .EQ. 0 ) EKY1 = 0.00
C ------------------------------------
      BY1T(2,1)=PTK/(2.*SPJT)*DSIN(N*PI*XI/XL)
     1        *EKY1
      BY1T(4,1)=-DSIN(N*PI*XI/XL)
     1        *EKY1
      BY1T(6,1)=-PTK/(2.*SPJT)*DSIN(N*PI*XI/XL)
     1        *EKY1
      BY1T(8,1)=DSIN(N*PI*XI/XL)
     1        *EKY1

      BY2(1,2)=-PTK/(2.*SPJT)*DSIN(M*PI*XI/XL)
      BY2(1,4)=-DSIN(M*PI*XI/XL)
      BY2(1,6)=PTK/(2.*SPJT)*DSIN(M*PI*XI/XL)
      BY2(1,8)=DSIN(M*PI*XI/XL)

      KY2 = (I - 1) *6 +4
      IF(ICH(IE,KY2) .EQ. 1) EKY2 = 1.00*EY(IE)
      IF(ICH(IE,KY2) .EQ. -1) EKY2 = 1.00 * 1.00E+10
      IF(ICH(IE,KY2) .EQ. 0 ) EKY2 = 0.00
C ------------------------------------
      BY2T(2,1)=-PTK/(2.*SPJT)*DSIN(N*PI*XI/XL)
     1        *EKY2
      BY2T(4,1)=-DSIN(N*PI*XI/XL)
     1        *EKY2
      BY2T(6,1)=PTK/(2.*SPJT)*DSIN(N*PI*XI/XL)
     1        *EKY2
      BY2T(8,1)=DSIN(N*PI*XI/XL)
     1        *EKY2

      CALL DGMULT (BY1T,BY1,YK,8,1,8,8,1,8)
      DO 20 I1=1,8
       DO 20 J=1,8
   20 SYK(I1,J)=SYK(I1,J)+YK(I1,J)
      CALL DGMULT (BY2T,BY2,YK,8,1,8,8,1,8)
      DO 30 I1=1,8
       DO 30 J=1,8
   30 SYK(I1,J)=SYK(I1,J)+YK(I1,J)
  100 CONTINUE
      RETURN
      END

C ***********************************************************
C THE CONTRIBUTION OF THE SPRING IN  Z  DIC. CALLED BY STIF12
```

```
C ***********************************************************
      SUBROUTINE BZ (N,M,IE)
       IMPLICIT DOUBLE PRECISION (A - H, O - Z)
      PARAMETER (MJT = 10, MEQ = 190, MSZ = 3610, MOZ = 1296)
      PARAMETER (MFT = 4, MLD = 12, MBC = 20, MPF = 20)
      PARAMETER (MSP = 9, MFO = 6, MNP = 378)
      COMMON /B00/ PI, PI2, PI4, TOL
      COMMON /B04/ NM, NSTEP, NFT, NJT,NST, NEQ, LHB, NSZ,NA1
      COMMON /B05/ XL, SPJT
      COMMON /B07/ PTK, PEX, PEY, PG, PVXY, PVYX, PKX, PKY, PKV, PKG,
     1          PDX, PDY, PDV, PDG
      COMMON /B13/ GSTIF(MFT,MSZ),  ASTIF(MFO,MOZ),
     1          XF(MFT,MEQ),FF(MFT,MEQ),RFF(MFT,MEQ),SVEC(MFT,MEQ),
     3          SVEC1(MFT,MEQ),SVEC2(MFT,MEQ),XFX(MFT,MEQ),EK(8,8)
      COMMON /B14/  XK(8,8),YK(8,8),ZK(8,8),
     1           BX1(1,8),BX2(1,8),BY1(1,8),BY2(1,8),
     2           BZ1(1,8),BZ2(1,8),BX1T(8,1),BX2T(8,1),BY1T(8,1),
     3           BY2T(8,1),BZ1T(8,1),BZ2T(8,1),SXK(8,8),
     4           SYK(8,8),SZK(8,8),EK12(12,12)
      COMMON /B15/  EX(MSP),EY(MSP),EZ(MSP),NAN,NP,MNL
      COMMON /B17/  ICH(MSP,MNP),ICH1(MSP,MNP),SL(12),
     1           DDX,DDZ,FX,FZ,TOLL,NNA

      DO 10 I=1,8
      DO 10 J=1,8
   10 SZK(I,J)=0.0
      DO 100 I=1,NP
      DX=XL/(NP-1)
      IF ( I.EQ.1 .OR. I.EQ.NP ) DX=0.5*XL/(NP-1)
      XI=(I-1)*XL/(NP-1)

      BZ1(1,1)=-DSIN(M*PI*XI/XL)
      BZ1(1,5)=DSIN(M*PI*XI/XL)

      KZ1 = (I -1) * 6 + 5
C ---------------------------------
      BZ1T(1,1)=-DSIN(N*PI*XI/XL)*EZ(IE)
     1         *ICH(IE,KZ1)
      BZ1T(5,1)=DSIN(N*PI*XI/XL)*EZ(IE)
     1         *ICH(IE,KZ1)

      CALL DGMULT (BZ1T,BZ1,ZK,8,1,8,8,1,8)
      DO 20 I1=1,8
       DO 20 J=1,8
   20 SZK(I1,J)=SZK(I1,J)+ZK(I1,J)
  100 CONTINUE
C ---------------------------------.
      DO 200 I=1,NP
      DX=XL/(NP-1)
      IF ( I.EQ.1 .OR. I.EQ.NP ) DX=0.5*XL/(NP-1)
      XI=(I-1)*XL/(NP-1)
```

```
      BZ2(1,1)=-DSIN(M*PI*XI/XL)
      BZ2(1,5)=DSIN(M*PI*XI/XL)

      KZ2 = (I -1) * 6 + 6
C ------------------------------------
      BZ2T(1,1)=-DSIN(N*PI*XI/XL)*EZ(IE)
     1        *ICH(IE,KZ2)
      BZ2T(5,1)=DSIN(N*PI*XI/XL)*EZ(IE)
     1        *ICH(IE,KZ2)

      CALL DGMULT (BZ2T,BZ2,ZK,8,1,8,8,1,8)
      DO 21 I1=1,8
       DO 21 J=1,8
   21 SZK(I1,J)=SZK(I1,J)+ZK(I1,J)
  200 CONTINUE
C ------------------------------------
      RETURN
      END

C ***********************************************************
C  THIS SUBROUTINE EXPANDS  EK(8,8) TO EK12(12,12) CALLED BY STIF12
C ***********************************************************
      SUBROUTINE EXP
       IMPLICIT DOUBLE PRECISION (A - H, O - Z)
      PARAMETER (MJT = 10, MEQ = 190, MSZ = 3610, MOZ = 1296)
      PARAMETER (MFT = 4, MLD = 12, MBC = 20, MPF = 20)
      PARAMETER (MSP = 9, MFO = 6, MNP = 378)
      COMMON /B13/ GSTIF(MFT,MSZ),  ASTIF(MFO,MOZ),
     1          XF(MFT,MEQ),FF(MFT,MEQ),RFF(MFT,MEQ),SVEC(MFT,MEQ),
     3          SVEC1(MFT,MEQ),SVEC2(MFT,MEQ),XFX(MFT,MEQ),EK(8,8)
      COMMON /B14/  XK(8,8),YK(8,8),ZK(8,8),
     1           BX1(1,8),BX2(1,8),BY1(1,8),BY2(1,8),
     2           BZ1(1,8),BZ2(1,8),BX1T(8,1),BX2T(8,1),BY1T(8,1),
     3           BY2T(8,1),BZ1T(8,1),BZ2T(8,1),SXK(8,8),
     4           SYK(8,8),SZK(8,8),EK12(12,12)
      DO 10 I=1,12
      DO 10 J=1,12
   10 EK12(I,J)=0.0

      DO 100 J=1,3
       DO 20 I=1,3
   20 EK12(I,J)=EK(I,J)
      EK12(5,J)=EK(4,J)
       DO 40 I=7,9
      I5=I-2
   40 EK12(I,J)=EK(I5,J)
      EK12(11,J)=EK(8,J)
  100 CONTINUE

       DO 120 I=1,3
  120 EK12(I,5)=EK(I,4)
       DO 130 I=5
```

```
 130 EK12(5,5)=EK(4,4)
     DO 140 I=7,9
     I5=I-2
 140 EK12(I,5)=EK(I5,4)
     EK12(11,5)=EK(8,4)

     DO 300 J=7,9
     J5=J-2
     DO 220 I=1,3
 220 EK12(I,J)=EK(I,J5)
     EK12(5,J)=EK(4,J5)
     DO 240 I=7,9
     I5=I-2
 240 EK12(I,J)=EK(I5,J5)
     EK12(11,J)=EK(8,J5)
 300 CONTINUE

     DO 320 I=1,3
 320 EK12(I,11)=EK(I,8)
     EK12(5,11)=EK(4,8)
     DO 340 I=7,9
     I5=I-2
 340 EK12(I,11)=EK(I5,8)
     EK12(11,11)=EK(8,8)

     RETURN
     END
C ***********************************************
C  TO MULTIPLY A REC. M BY N MATRIX BY ANOTHER RECT.
C  N BY L MATRIX.
C ***********************************************
     SUBROUTINE DGMULT(A, B, C, M, N, L, NA, NB, NC)
     IMPLICIT DOUBLE PRECISION (A - H, O -Z)
     REAL*8 A(NA,1), B(NB,1), C(NC,1)
     DO 20 J = 1, L
      DO 20 I = 1, M
       C(I,J) = 0.D0
       DO 10 K = 1, N
 10     C(I,J) = C(I,J) + A(I,K) * B(K,J)
 20 CONTINUE
     RETURN
     END

C ***********************************************
C  SUBROUTINE LOAD COMPUTES THE GLOBAL LOAD VECTOR.
C ***********************************************
     SUBROUTINE LOAD(III,IIII)
     IMPLICIT DOUBLE PRECISION (A - H, O - Z)
     PARAMETER (MJT = 10, MEQ = 190, MSZ = 3610, MOZ = 1296)
     PARAMETER (MFT = 4, MLD = 12, MBC = 20, MPF = 20)
     PARAMETER (MSP = 9, MFO = 6, MNP = 378)
     COMMON /B00/ PI, PI2, PI4, TOL
```

```
      COMMON  /B03/ ETA(6), GWT(6)
      COMMON /B04/ NM, NSTEP, NFT, NJT, NST,NEQ, LHB, NSZ,NA1
      COMMON /B05/ XL, SPJT
      COMMON /B09/ X1LD(MLD), X2LD(MLD), Y1LD(MLD), Y2LD(MLD),
     1          PWLD(MLD),PPWLD(MLD), JTLD(MLD), NWLD
      COMMON /B10/ XPTF(MPF), PTF(MPF),NPTF
      COMMON /B13/ GSTIF(MFT,MSZ), ASTIF(MFO,MOZ),
     1          XF(MFT,MEQ),FF(MFT,MEQ),RFF(MFT,MEQ),SVEC(MFT,MEQ),
     3          SVEC1(MFT,MEQ),SVEC2(MFT,MEQ),XFX(MFT,MEQ),EK(8,8)
      COMMON /B17/ ICH(MSP,MNP),ICH1(MSP,MNP),SL(12),
     1          DDX,DDZ,FX,FZ,TOLL,NNA
      DIMENSION   W(19)

      DO 20 IK = 1, NM, NSTEP
        IKO = IK
        IF (NSTEP .EQ. 2) IKO = (IK +1) / 2
        DO 10 I = 1, NEQ
          XF(IKO,I) = 0.0D0
   10   CONTINUE
   20 CONTINUE

C  CONTRIBUTION FROM TRANSVERSE LOADING

      IF (IIII .EQ. 2) THEN
      IF (NWLD .NE. 0) THEN
        DO 70 IL = 1, NWLD
          IE = JTLD(IL)
          IJ = (IE - 1) * 19
C ------------------------------
          DO 60 IK = 1, NM, NSTEP
            IKO = IK
            IF (NSTEP .EQ. 2) IKO = (IK +1) / 2
            PINL = PI * IK / XL
            DO 30 I = 1, 19
              W(I) = 0.0D0
   30       CONTINUE
            XIX = 2.0D0 * Y1LD(IL) / SPJT
            XIY = 2.0D0 * Y2LD(IL) / SPJT
            DO 40 I = 1, 6
              XI  = XIX + (XIY - XIX) * (1.0D0 + ETA(I)) / 2.0D0
              XI2 = XI**2
              XI3 = XI2 * XI
              XI4 = XI3 * XI
              XI5 = XI4 * XI
              W(1)  = W(1)  + (XI2 - (5.0D0 * XI3 / 4.0D0)
     1              - (XI4 / 2.0D0) + (3.0D0 * XI5 / 4.0D0)) * GWT(I)
              W(2)  = W(2)  + (XI2 - XI3 - XI4 + XI5) * GWT(I) / 8.0D0
              W(9)  = W(9)  + (XI - (2.0D0 * XI3) + XI5) * GWT(I) /
     1              2.0D0
              W(10) = W(10) + (1.0D0 - (2.0D0 * XI2) + XI4) * GWT(I)
              W(14) = W(14) + (XI2 + (5.0D0 * XI3 / 4.0D0)
     1              - (XI4 / 2.0D0) - (3.0D0 * XI5 / 4.0D0)) * GWT(I)
```

```
        W(15) = W(15) + (-XI2 - XI3 + XI4 + XI5) * GWT(I) / 8.0D0
 40     CONTINUE
        Y1 = Y1LD(IL)
        Y2 = Y2LD(IL)
        X1 = X1LD(IL)
        X2 = X2LD(IL)
        FACC = (1.0D0 / (2.0D0 * PINL)) * (Y2LD(IL) - Y1LD(IL)) *
 1          (DCOS(PINL*X1LD(IL)) - DCOS(PINL*X2LD(IL)))
        W(1)  = W(1)  * FACC
        W(2)  = W(2)  * FACC
        W(9)  = W(9)  * FACC
        W(10) = W(10) * FACC
        W(14) = W(14) * FACC
        W(15) = W(15) * FACC
        DO 50 I = 1, 19
         XF(IKO,IJ+I) = XF(IKO,IJ+I) + ((PWLD(IL) * W(I)))
 50     CONTINUE
 60    CONTINUE
 70   CONTINUE
    END IF
    END IF

C  CONTRIBUTION FROM POST TENSIONING FORCES

    IF (III .EQ. 1) THEN
    IF (NPTF .NE. 0) THEN
     DO 90 I = 1, NPTF
      DO 80 IK = 1, NM, NSTEP
       IKO = IK
       IF (NSTEP .EQ. 2) IKO = (IK +1) / 2
       PINL = PI * IK / XL
       V5  = DSIN(PINL*XPTF(I))
       IJ = 5
       XF(IKO,IJ) = XF(IKO,IJ) + (PTF(I) * V5)
       V18 = DSIN(PINL*XPTF(I))

       IJ = ((NJT - 1) * 19) + 18
      XF(IKO,IJ) = XF(IKO,IJ) - (PTF(I) * V18)
 80    CONTINUE
 90   CONTINUE
    END IF
    END IF


    RETURN
    END

C ***********************************************************
C THIS SUBROUTINE CALCULATES THE EQUIVALENT LOADS CONTRIBUTED
C FROM THE NON-LINEAR SPRINGS
C ***********************************************************
    SUBROUTINE SLOAD(IE,IK)
```

```
      IMPLICIT DOUBLE PRECISION (A - H, O - Z)
      PARAMETER (MJT = 10, MEQ = 190, MSZ = 3610, MOZ = 1296)
      PARAMETER (MFT = 4, MLD = 12, MBC = 20, MPF = 20)
      PARAMETER (MSP = 9, MFO = 6, MNP = 378)
      COMMON /B00/ PI, PI2, PI4, TOL
      COMMON /B04/ NM, NSTEP, NFT, NJT,NST, NEQ, LHB, NSZ,NA1
      COMMON /B05/ XL, SPJT
      COMMON /B07/ PTK, PEX, PEY, PG, PVXY, PVYX, PKX, PKY, PKV, PKG,
     1          PDX, PDY, PDV, PDG
      COMMON /B13/ GSTIF(MFT,MSZ),  ASTIF(MFO,MOZ),
     1          XF(MFT,MEQ),FF(MFT,MEQ),RFF(MFT,MEQ),SVEC(MFT,MEQ),
     3          SVEC1(MFT,MEQ),SVEC2(MFT,MEQ),XFX(MFT,MEQ),EK(8,8)
      COMMON /B15/  EX(MSP),EY(MSP),EZ(MSP),NAN,NP,MNL
      COMMON /B17/  ICH(MSP,MNP),ICH1(MSP,MNP),SL(12),
     1           DDX,DDZ,FX,FZ,TOLL,NNA

      DO 10 I = 1,12
   10  SL(I) = 0.0
      DX = XL/(NP - 1)
      DO 100 IP = 1,NP
      IF (IP .EQ. 1  .OR. IP .EQ. NP) DX=0.5*XL/(NP-1)
      XI = (IP - 1)*XL/(NP - 1)
       KX1 = (IP - 1)*6 + 1
        KX2 = (IP - 1)*6 + 2
         KZ1 = (IP - 1)*6 + 5
         KZ2 = (IP - 1)*6 + 6

     SL(1) =  SL(1)
     1       + PTK/2.*(IK*PI/XL)*DCOS(IK*PI*XI/XL)*FX*ICH1(IE,KX1)
     2       - PTK/2.*(IK*PI/XL)*DCOS(IK*PI*XI/XL)*FX*ICH1(IE,KX2)
     3       - DSIN(IK*PI*XI/XL)*FZ*ICH1(IE,KZ1)
     3       - DSIN(IK*PI*XI/XL)*FZ*ICH1(IE,KZ2)

     SL(3) =  SL(3)
     1      - DCOS(IK*PI*XI/XL)*FX*ICH1(IE,KX1)
     2      - DCOS(IK*PI*XI/XL)*FX*ICH1(IE,KX2)

     SL(7) =  SL(7)
     1      - PTK/2.*(IK*PI/XL)*DCOS(IK*PI*XI/XL)*FX*ICH1(IE,KX1)
     2      + PTK/2.*(IK*PI/XL)*DCOS(IK*PI*XI/XL)*FX*ICH1(IE,KX2)
     3      + DSIN(IK*PI*XI/XL)*FZ*ICH1(IE,KZ1)
     3      + DSIN(IK*PI*XI/XL)*FZ*ICH1(IE,KZ2)

     SL(9) = SL(9)
     1       + DCOS(IK*PI*XI/XL)*FX*ICH1(IE,KX1)
     2       + DCOS(IK*PI*XI/XL)*FX*ICH1(IE,KX2)

  100 CONTINUE
      RETURN
      END

C ***********************************************************************
```

```
C SUBROUTINE GBC APPLIES THE BOUNDARY CONDITIONS TO THE STIFFNESS MATRIX
C GSTIF(IKO,JK) AND LOAD VECTOR XF(IKO,JK).
C ***********************************************************************
      SUBROUTINE GBC (IKO)
      IMPLICIT DOUBLE PRECISION (A - H, O - Z)
      PARAMETER (MJT = 10, MEQ = 190, MSZ = 3610, MOZ = 1296)
      PARAMETER (MFT = 4, MLD = 12, MBC = 20, MPF = 20)
      PARAMETER (MSP = 9, MFO = 6, MNP = 378)
      COMMON /B04/ NM, NSTEP, NFT, NJT, NST,NEQ, LHB, NSZ,NA1
      COMMON /B11/ IBC(MBC,2), NBC
      COMMON /B13/ GSTIF(MFT,MSZ), ASTIF(MFO,MOZ),
     1          XF(MFT,MEQ),FF(MFT,MEQ),RFF(MFT,MEQ),SVEC(MFT,MEQ),
     3          SVEC1(MFT,MEQ),SVEC2(MFT,MEQ),XFX(MFT,MEQ),EK(8,8)

      IF (NBC.NE.0) THEN
      DO 30 I = 1, NBC
        NE = IBC(I,1)
        IDOF = IBC(I,2)
        M = (NE - 1) * 19 + IDOF
C ---------------------------
        J1 = 1
        MM = M - 1
        IF (M .GE. 19) J1 = M - 18
        DO 10 J = J1, MM
          JK = (LHB - 1) * (J - 1) + M
          GSTIF(IKO,JK) = 0.0
 10     CONTINUE
        M1 = M + 1
        M8 = M + 18
        IF (M8 .GT. NEQ) M8 = NEQ
        DO 20 J = M1, M8
          JK = (LHB - 1) * (M - 1) + J
          GSTIF(IKO,JK) = 0.0
 20     CONTINUE
        JK = (LHB - 1) * (M - 1) + M
        GSTIF(IKO,JK) = 1.0
        XF(IKO,M) = 0.0
 30   CONTINUE
      END IF
      RETURN
      END

C ***********************************************************************
C SUBROUTINE ABC APPLIES THE BOUNDARY CONDITIONS TO THE STIFFNESS MATRIX
C ASTIF(IKO,JK) .
C ***********************************************************************
      SUBROUTINE ABC (IKO,IE)
      IMPLICIT DOUBLE PRECISION (A - H, O - Z)
      PARAMETER (MJT = 10, MEQ = 190, MSZ = 3610, MOZ = 1296)
      PARAMETER (MFT = 4, MLD = 12, MBC = 20, MPF = 20)
      PARAMETER (MSP = 9, MFO = 6, MNP = 378)
      COMMON /B04/ NM, NSTEP, NFT, NJT, NST,NEQ, LHB, NSZ,NA1
```

```
      COMMON /B11/ IBC(MBC,2), NBC
      COMMON /B13/ GSTIF(MFT,MSZ), ASTIF(MFO,MOZ),
     1          XF(MFT,MEQ),FF(MFT,MEQ),RFF(MFT,MEQ),SVEC(MFT,MEQ),
     3          SVEC1(MFT,MEQ),SVEC2(MFT,MEQ),XFX(MFT,MEQ),EK(8,8)
      COMMON /B14/  XK(8,8),YK(8,8),ZK(8,8),
     1           BX1(1,8),BX2(1,8),BY1(1,8),BY2(1,8),
     2           BZ1(1,8),BZ2(1,8),BX1T(8,1),BX2T(8,1),BY1T(8,1),
     3           BY2T(8,1),BZ1T(8,1),BZ2T(8,1),SXK(8,8),
     4           SYK(8,8),SZK(8,8),EK12(12,12)

      IF (NBC.NE.0) THEN
      DO 20 I = 1, NBC
        NE = IBC(I,1)
        IDOF = IBC(I,2)
C ---------------------------------------------
      IF (NE .EQ. IE) THEN
      IF (IDOF .GE. 14) THEN

      J = IDOF - 13
      DO 10 K = 1,12
 10    EK12(J,K) = 0.0

      K = IDOF - 13
      DO 14 J = 1,12
 14    EK12(J,K) = 0.0

      END IF
      END IF


      IF ( NE .EQ. IE+1 ) THEN
      IF ( IDOF .LE. 6 ) THEN

      JJ = IDOF + 6
      DO 16 KK = 1,12
 16    EK12(JJ,KK) = 0.0

      KK = IDOF + 6
      DO 18  JJ = 1,12
 18    EK12(JJ,KK) = 0.0


      END IF
      END IF

 20   CONTINUE
      END IF
      RETURN
      END

C ************************************************************
C  SUBROUTINE DCOMP DECOMPOSES THE STIFFNESS DIAGONAL SUB-MATRICES
```

```
C  USING THE CHOLESKY METHOD.
C ***************************************************************
      SUBROUTINE DCOMP (IKO)
       IMPLICIT DOUBLE PRECISION (A - H , O - Z)
      PARAMETER (MJT = 10, MEQ = 190, MSZ = 3610, MOZ = 1296)
      PARAMETER (MFT = 4, MLD = 12, MBC = 20, MPF = 20)
      PARAMETER (MSP = 9, MFO = 6, MNP = 378)
      COMMON /B04/ NM, NSTEP, NFT, NJT,NST, NEQ, LHB, NSZ,NA1
      COMMON /B13/ GSTIF(MFT,MSZ),  ASTIF(MFO,MOZ),
     1          XF(MFT,MEQ),FF(MFT,MEQ),RFF(MFT,MEQ),SVEC(MFT,MEQ),
     3          SVEC1(MFT,MEQ),SVEC2(MFT,MEQ),XFX(MFT,MEQ),EK(8,8)

C  THE SYSTEM MATRIX GSTIF IS STORED COLUMNWISE.

      KB = LHB - 1
      TEMP = GSTIF(IKO,1)
      TEMP = DSQRT(TEMP)
      GSTIF(IKO,1) = TEMP
      DO 10 I = 2, LHB
       GSTIF(IKO,I) = GSTIF(IKO,I) / TEMP
   10 CONTINUE
      DO 60 J = 2, NEQ
       J1 = J - 1
       IJD = LHB * J - KB
       SUM = GSTIF(IKO,IJD)
       KO = 1
       IF (J .GT. LHB) KO = J - KB
       DO 20 K = KO, J1
        JK = KB * K + J - KB
        TEMP = GSTIF(IKO,JK)
        SUM = SUM - TEMP ** 2
   20  CONTINUE
       GSTIF(IKO,IJD) = DSQRT(SUM)
       DO 50 I = 1, KB
        II = J + I
        KO = 1
        IF (II .GT. LHB) KO = II - KB
        SUM = GSTIF(IKO,IJD + I)
        IF (I .EQ. KB) GO TO 40
        DO 30 K = KO, J1
         JK = KB * K + J - KB
         IK = KB * K + II - KB
         TEMP = GSTIF(IKO,JK)
        SUM = SUM - GSTIF(IKO,IK) * TEMP
   30   CONTINUE
   40   GSTIF(IKO,IJD + I) = SUM / GSTIF(IKO,IJD)
   50  CONTINUE
   60 CONTINUE
      RETURN
      END

C ***************************************************************
```

```
C  SUBROUTINE SOLVE SOLVES THE SYSTEM OF EQUATIONS USING THE
C  DECOMPOSED MATRIX OBTAINED FROM SUBROUTINE DCOMP.
C ***********************************************************
      SUBROUTINE SOLVE (IKO)
      IMPLICIT DOUBLE PRECISION (A - H, O - Z)
      PARAMETER (MJT = 10, MEQ = 190, MSZ = 3610, MOZ = 1296)
      PARAMETER (MFT = 4, MLD = 12, MBC = 20, MPF = 20)
      PARAMETER (MSP = 9, MFO = 6, MNP = 378)
      COMMON /B04/ NM, NSTEP, NFT, NJT, NST,NEQ, LHB, NSZ,NA1
      COMMON /B13/ GSTIF(MFT,MSZ), ASTIF(MFO,MOZ),
     1          XF(MFT,MEQ),FF(MFT,MEQ),RFF(MFT,MEQ),SVEC(MFT,MEQ),
     3          SVEC1(MFT,MEQ),SVEC2(MFT,MEQ),XFX(MFT,MEQ),EK(8,8)

C  FORWARD SUBSTITUTION.

      KB = LHB - 1
      TEMP = GSTIF(IKO,1)
      XF(IKO,1) = XF(IKO,1) / TEMP
      DO 20 I = 2, NEQ
       I1 = I - 1
       KO = 1
       IF (I .GT. LHB) KO = I - KB
       SUM = XF(IKO,I)
       II = LHB * I - KB
       DO 10 K = KO, I1
        IK = KB * K + I - KB
        TEMP = GSTIF(IKO,IK)
        SUM = SUM - (TEMP * XF(IKO,K))
 10    CONTINUE
       XF(IKO,I) = SUM / GSTIF(IKO,II)
 20 CONTINUE

C  BACKWARD SUBSTITUTION.

      N1 = NEQ - 1
      LB = LHB * NEQ - KB
      TEMP = GSTIF(IKO,LB)
      XF(IKO,NEQ) = XF(IKO,NEQ) / TEMP
      DO 40 I = 1, N1
       I1 = NEQ - I + 1
       NI = NEQ - I
       KO = NEQ
       IF (I .GT. KB) KO = NI + KB
       SUM = XF(IKO,NI)
       II = LHB * NI - KB
       DO 30 K = I1, KO
        IK = KB * NI + K - KB
        TEMP = GSTIF(IKO,IK)
        SUM = SUM - (TEMP * XF(IKO,K))
 30    CONTINUE
       XF(IKO,NI) = SUM / GSTIF(IKO,II)
 40 CONTINUE
```

```
      RETURN
      END

C ***********************************************************
C     ITERATING METHOD IS USED IN THIS SUBROUTINE TO SOLVE
C     THE COUPLING EQUATIONS.
C ***********************************************************
      SUBROUTINE ITERATE
      IMPLICIT DOUBLE PRECISION (A - H, O -Z)
      PARAMETER (MJT = 10, MEQ = 190, MSZ = 3610, MOZ = 1296)
      PARAMETER (MFT = 4, MLD = 12, MBC = 20, MPF = 20)
      PARAMETER (MSP = 9, MFO = 6, MNP = 378)
      COMMON /B00/ PI, PI2, PI4, TOL
      COMMON /B04/ NM, NSTEP, NFT, NJT, NST,NEQ, LHB, NSZ,NA1
      COMMON /B13/ GSTIF(MFT,MSZ), ASTIF(MFO,MOZ),
     1          XF(MFT,MEQ),FF(MFT,MEQ),RFF(MFT,MEQ),SVEC(MFT,MEQ),
     3          SVEC1(MFT,MEQ),SVEC2(MFT,MEQ),XFX(MFT,MEQ),EK(8,8)
      COMMON /B17/  ICH(MSP,MNP),ICH1(MSP,MNP),SL(12),
     1          DDX,DDZ,FX,FZ,TOLL,NNA
      DIMENSION X(MEQ),XX(MEQ)

      IF (NM .EQ. 1) GO TO 1230
C ------------------------------------------------------------
 1090 NFLAG = 1
      DO 1220 IK = 1, NM, NSTEP
       IKM = IK
       IF (NSTEP .EQ. 2) IKM = (IK + 1) / 2
       DO 1100 I = 1, NEQ
 1100   XX(I) = FF(IKM,I)
       DO 1170 IN = 1, NM, NSTEP
        IF (IN .EQ. IK) GO TO 1170
        INM = IN
        IF (NSTEP .EQ. 2) INM = (IN + 1) / 2
        IF (IN .GT. IK) GO TO 1110
        IKO = (INM - 1) * NFT + IKM - INM * (INM + 1) / 2
        GO TO 1120
 1110    IKO = (IKM - 1) * NFT + INM - IKM * (IKM + 1) / 2

C ------------------------------------------------------------
 1120   DO 100 IE = 1, NST
         IJ1 = ( IE - 1 ) * 19 + 14
         IJ2 = ( IE - 1 ) * 19 + 14 + 11
         IJJ = ( IE - 1 ) * 144

        DO 80 I = IJ1,IJ2
         TEMP = 0.0
         CHI = I - (IE - 1 ) *19 -13

        DO 60 J = IJ1, IJ2
         CHII = J - (IE - 1 ) *19 -13
         TEMP1 = SVEC(INM,J)
         CHICHI = IJJ + (CHI-1)*12 + CHII
```

```
 60      TEMP = TEMP + ASTIF(IKO,CHICHI) * TEMP1

 80       XX(I) = XX(I) - TEMP
 100     CONTINUE

C ------------------------------------------

 1170  CONTINUE
C ------------------------------------------
      DO 1190 I = 1, NEQ
 1190  XF(IKM,I) = XX(I)
      CALL SOLVE(IKM)
      DO 1195 I = 1,NEQ
 1195  X(I) = XF(IKM,I)
C ------------------------------------------
      TEMP = 0.0
      TEMP1 = 0.0
      DO 1200 I = 1, NEQ
       TEMP = TEMP + (X(I)**2)
       TEMP1 = TEMP1 + (SVEC(IKM,I)**2)
 1200  CONTINUE
      TEMP = DSQRT(TEMP)
      TEMP1 = DSQRT(TEMP1)
      EPS = DABS((TEMP - TEMP1)/TEMP1)
C ------------------------------------------
      GIKM = 0.0
      AIKO = 0.0
      DO 1204 NANA = 1,NSZ
 1204   GIKM = GIKM + (GSTIF(IKM,NANA))**2
      DO 1206 MAMA = 1,NA1
 1206  AIKO = AIKO + (ASTIF(IKO,MAMA))**2
c      WRITE(*,*)'EPS = SOLVE',EPS,'IKM = ',IKM
c      WRITE(*,*)'GIKM = ',GIKM,'  IKM = ',IKM
c      WRITE(*,*)'AIKO = ',AIKO,'  IKO = ',IKO
C ------------------------------------------
      NAC = 1
      IF (EPS .GT. TOL) NAC = 0
      NFLAG = NFLAG * NAC
      DO 1210 I = 1, NEQ
 1210  SVEC(IKM,I) = X(I)
 1220 CONTINUE
    IF (NFLAG .EQ. 1) GO TO 1230
    GO TO 1090

 1230 CONTINUE
    RETURN
    END


C ************************************************************
C THIS SUBROUTINE CHECKS THE DEFORMATIONS OF THE SPRING ELEMENTS
C TO SEE WHICH DEFORMATION EXCEEDS THE LIMITION.
C ************************************************************
```

```
      SUBROUTINE CHECK(LMNLMN)
C                LMNLMN = 1 WRITE  = 0 DON'T WRITE
       IMPLICIT DOUBLE PRECISION (A - H, O - Z)
      PARAMETER (MJT = 10, MEQ = 190, MSZ = 3610, MOZ = 1296)
      PARAMETER (MFT = 4, MLD = 12, MBC = 20, MPF = 20)
      PARAMETER (MSP = 9, MFO = 6, MNP = 378)
      COMMON /B00/ PI, PI2, PI4, TOL
      COMMON /B04/ NM, NSTEP, NFT, NJT,NST, NEQ, LHB, NSZ,NA1
      COMMON /B05/ XL, SPJT
      COMMON /B07/ PTK, PEX, PEY, PG, PVXY, PVYX, PKX, PKY, PKV, PKG,
     1         PDX, PDY, PDV, PDG
      COMMON /B13/ GSTIP(MFT,MSZ),  ASTIP(MFO,MOZ),
     1         XF(MFT,MEQ),FF(MFT,MEQ),RFF(MFT,MEQ),SVEC(MFT,MEQ),
     3         SVEC1(MFT,MEQ),SVEC2(MFT,MEQ),XFX(MFT,MEQ),EK(8,8)
      COMMON /B15/  EX(MSP),EY(MSP),EZ(MSP),NAN,NP,MNL
      COMMON /B17/  ICH(MSP,MNP),ICH1(MSP,MNP),SL(12),
     1         DDX,DDZ,FX,FZ,TOLL,NNA
      COMMON /B18/  SIGMAY,WDX1(MSP),WDX2(MSP),
     1          WDY1(MSP),WDY2(MSP),WDZ1(MSP),WDZ2(MSP)
      DIMENSION S(12)
C ------------------------------

      DO 5 IK =1,NM,NSTEP
      IKM = IK
      IF (NSTEP .EQ. 2) IKM =(1+IK)/2
      DO 5 I = 1,NEQ
 5    SVEC(IKM,I) = SVEC(IKM,I) + SVEC2(IKM,I)

C ---------------------------
       DO 170  IE = 1,NST

          WDX1(IE) = 0.D0
          WDX2(IE) = 0.D0
          WDY1(IE) = 0.D0
          WDY2(IE) = 0.D0
          WDZ1(IE) = 0.D0
          WDZ2(IE) = 0.D0
C ---------------------------
         DO 150 IP = 1,NP
          XI = (IP - 1)*XL/(NP - 1)
          DX1 = 0.0
          DX2 = 0.0
          DY1 = 0.0
          DY2 = 0.0
          DZ1 = 0.0
          DZ2 = 0.0
C ---------------------------
           DO 130 IK = 1,NM,NSTEP
           IKO = IK
           IF (NSTEP .EQ. 2) IKO = (IK + 1)/2
       DO 20 I =14,19
        J = (IE - 1)*19 +I
```

```
      K = I - 13
      S(K) = SVEC(IKO,J)
   20 CONTINUE
      DO 40 I = 1,6
      J = IE *19 + I
      K = I + 6
      S(K) = SVEC(IKO,J)
   40 CONTINUE


      Y1=PTK/(2.*SPJT)*DSIN(IK*PI*XI/XL)*S(2)
     1 -DSIN(IK*PI*XI/XL)*S(5)
     2 -PTK/(2.*SPJT)*DSIN(IK*PI*XI/XL)*S(8)
     3 +DSIN(IK*PI*XI/XL)*S(11)

      Y2=-PTK/(2.*SPJT)*DSIN(IK*PI*XI/XL)*S(2)
     1 -DSIN(IK*PI*XI/XL)*S(5)
     2 +PTK/(2.*SPJT)*DSIN(IK*PI*XI/XL)*S(8)
     3 +DSIN(IK*PI*XI/XL)*S(11)

      X1=PTK/2.*(IK*PI/XL)*DCOS(IK*PI*XI/XL)*S(1)
     1 -DCOS(IK*PI*XI/XL)*S(3)
     2 -PTK/2.*(IK*PI/XL)*DCOS(IK*PI*XI/XL)*S(7)
     3 +DCOS(IK*PI*XI/XL)*S(9)

      X2=-PTK/2.*(IK*PI/XL)*DCOS(IK*PI*XI/XL)*S(1)
     1 -DCOS(IK*PI*XI/XL)*S(3)
     2 +PTK/2.*(IK*PI/XL)*DCOS(IK*PI*XI/XL)*S(7)
     3 +DCOS(IK*PI*XI/XL)*S(9)

      Z1=-DSIN(IK*PI*XI/XL)*S(1)
     1 +DSIN(IK*PI*XI/XL)*S(7)

      Z2=-DSIN(IK*PI*XI/XL)*S(1)
     1 +DSIN(IK*PI*XI/XL)*S(7)

      DX1 = DX1 + X1
      DX2 = DX2 + X2
      DY1 = DY1 + Y1
      DY2 = DY2 + Y2
      DZ1 = DZ1 + Z1
      DZ2 = DZ2 + Z2
C ----------------------------
  130 CONTINUE

      KX1 = (IP - 1)*6 + 1
      KX2 = (IP - 1)*6 + 2
      KY1 = (IP - 1)*6 + 3
      KY2 = (IP - 1)*6 + 4
      KZ1 = (IP - 1)*6 + 5
      KZ2 = (IP - 1)*6 + 6
C ----------------------------
```

```
      IF (DY1 .LE. 0.0 .AND. ICH(IE,KY1) .NE. 0) THEN

      IF (ICH(IE,KX1) .EQ. 1) THEN
      IF (DABS(DX1) .GE. DDX) THEN
      ICH(IE,KX1) = 0
      IF(DX1 .GT. 0.0) ICH1(IE,KX1) = 1
      IF(DX1 .LT. 0.0) ICH1(IE,KX1) = -1
      NNA = NNA + 1
      END IF
      END IF
      ICH(IE,KY1) = -1

      END IF
C ------------------
      IF (DY1 .GT. 0.0) THEN

      ICH(IE,KX1) = 0
      ICH1(IE,KX1) = 0
      NNA = NNA + 1
      ICH(IE,KY1) = 0
      NNA = NNA + 1

      END IF
C ------------------------.

      IF (DY2 .LE. 0.0 .AND. ICH(IE,KY2) .NE. 0) THEN
      IF (ICH(IE,KX2) .EQ. 1) THEN
      IF (DABS(DX2) .GE. DDX) THEN
      ICH(IE,KX2) = 0
      IF(DX2 .GT. 0.0) ICH1(IE,KX2) = 1
      IF(DX2 .LT. 0.0) ICH1(IE,KX2) = -1
      NNA = NNA + 1
      END IF
      END IF
      ICH(IE,KY2) = -1
      END IF
C ------------------------
      IF (DY2 .GT. 0.0) THEN

      ICH(IE,KX2) = 0
      ICH1(IE,KX2) = 0
      NNA = NNA + 1
      ICH(IE,KY2) = 0
      NNA = NNA + 1
      END IF
C ------------------------
C IN Z - DIRECTION     ** Z1 **

      IF (DY1 .LE. 0.0 .AND. ICH(IE,KY1) .NE. 0) THEN

      IF (ICH(IE,KZ1) .EQ. 1) THEN
      IF (DABS(DZ1) .GE. DDZ) THEN
```

```
      ICH(IE,KZ1) = 0
      IF(DZ1 .GT. 0.0) ICH1(IE,KZ1) = 1
      IF(DZ1 .LT. 0.0) ICH1(IE,KZ1) = -1
      NNA = NNA + 1
      END IF
      END IF
      END IF

C  IN Z - DIRECTION     ** Z2 **

      IF (DY1 .LE. 0.0 .AND. ICH(IE,KY1) .NE. 0) THEN

      IF (ICH(IE,KZ2) .EQ. 1) THEN
      IF (DABS(DZ2) .GE. DDZ) THEN
      ICH(IE,KZ2) = 0
      IF(DZ2 .GT. 0.0) ICH1(IE,KZ2) = 1
      IF(DZ2 .LT. 0.0) ICH1(IE,KZ2) = -1
      NNA = NNA + 1
      END IF
      END IF
      END IF
C ------------------
      IF (DY1 .GT. 0.0) THEN
      ICH(IE,KZ1) = 0
      ICH1(IE,KZ1) = 0
      NNA = NNA + 1
      END IF

      IF (DY2 .GT. 0.0) THEN
      ICH(IE,KZ2) = 0
      ICH1(IE,KZ2) = 0
      NNA = NNA + 1
      END IF
C ------------------------------
      IF (DABS(DX1) .GE. WDX1(IE)) WDX1(IE) = DABS(DX1)
      IF (DABS(DX2) .GE. WDX2(IE)) WDX2(IE) = DABS(DX2)
      IF (DABS(DZ1) .GE. WDZ1(IE)) WDZ1(IE) = DABS(DZ1)
      IF (DABS(DZ2) .GE. WDZ2(IE)) WDZ2(IE) = DABS(DZ2)
      IF ((DY1) .LE. WDY1(IE)) WDY1(IE) = (DY1)
      IF ((DY2) .LE. WDY2(IE)) WDY2(IE) = (DY2)
C------------------------------------.

 150  CONTINUE

 170  CONTINUE
      DO 200 IK =1,NM,NSTEP
      IKM = IK
      IF (NSTEP .EQ. 2) IKM =(1+IK)/2
      DO 200 I = 1,NEQ
200   SVEC(IKM,I) = SVEC(IKM,I) - SVEC2(IKM,I)
      RETURN
      END
```

```
C ***************************************************
C  THIS SUBROUTINE CALCULATES THE IMBALANCE LOAD CAUSED
C  BY THE NON LINEAR DEFORMATION OF THE SPRING ELEMENTS
C ***************************************************
      SUBROUTINE IMBALANCE
      IMPLICIT DOUBLE PRECISION (A - H, O - Z)
      PARAMETER (MJT = 10, MEQ = 190, MSZ = 3610, MOZ = 1296)
      PARAMETER (MFT = 4, MLD = 12, MBC = 20, MPF = 20)
      PARAMETER (MSP = 9, MFO = 6, MNP = 378)
      COMMON /B00/ PI, PI2, PI4, TOL
      COMMON /B04/ NM, NSTEP, NFT, NJT,NST, NEQ, LHB, NSZ,NA1
      COMMON /B05/ XL, SPJT
      COMMON /B06/ EJT(MJT), GJT(MJT), BJT, HJT, AJT, RIY, RIZ, RIT
      COMMON /B07/ PTK, PEX, PEY, PG, PVXY, PVYX, PKX, PKY, PKV, PKG,
     1          PDX, PDY, PDV, PDG
      COMMON /B11/ IBC(MBC,2), NBC
      COMMON /B12/ ESTIF(19,19)
      COMMON /B13/ GSTIF(MFT,MSZ), ASTIF(MFO,MOZ),
     1          XF(MFT,MEQ),FF(MFT,MEQ),RFF(MFT,MEQ),SVEC(MFT,MEQ),
     3          SVEC1(MFT,MEQ),SVEC2(MFT,MEQ),XFX(MFT,MEQ),EK(8,8)
      COMMON /B14/  XK(8,8),YK(8,8),ZK(8,8),
     1           BX1(1,8),BX2(1,8),BY1(1,8),BY2(1,8),
     2           BZ1(1,8),BZ2(1,8),BX1T(8,1),BX2T(8,1),BY1T(8,1),
     3           BY2T(8,1),BZ1T(8,1),BZ2T(8,1),SXK(8,8),
     4           SYK(8,8),SZK(8,8),EK12(12,12)
      COMMON /B15/  EX(MSP),EY(MSP),EZ(MSP),NAN,NP,MNL
      COMMON /B17/  ICH(MSP,MNP),ICH1(MSP,MNP),SL(12),
     1          DDX,DDZ,FX,FZ,TOLL,NNA
      DIMENSION SG(19),SG1(19)

       CALL CHECK(0)

      DO 5 IK =1,NM,NSTEP
      IKM = IK
      IF (NSTEP .EQ. 2) IKM =(1+IK)/2
      DO 5 I = 1,NEQ
    5 SVEC(IKM,I) = SVEC(IKM,I) + SVEC2(IKM,I)

       DO 20 IK = 1,NM,NSTEP
       IKM = IK
       IF (NSTEP .EQ. 2) IKM = (IK + 1)/2
       DO 10 I = 1,NEQ
   10  XF(IKM,I) = XFX(IKM,I)
        DO 20 IE = 1,NST
        CALL SLOAD(IE,IK)
        IJ = (IE - 1)*19 + 13
         DO 20 I = 1,12
   20       XF(IKM,IJ+I) = XF(IKM,IJ+I) - SL(I)
C ---------------------------------
       DO 300 IK = 1,NM,NSTEP
        IKM = IK
```

```
      IF (NSTEP .EQ. 2) THEN
      IKM = (IK+1)/2
      END IF
     DO 300  IN = 1,NM,NSTEP
    IF (IN .EQ. IK) THEN
    FAC2 = (IK**2) * PI2 / (2.0D0 * XL)
    FAC4 = (IK**4) * PI4 / (2.0D0 * (XL**3))
    DO 200 IE = 1,NJT
    CALL COVCON(IK,IN)

     ESTIF(10,10) = ESTIF(10,10) + (EJT(IE) * RIY * FAC4)
     ESTIF(11,11) = ESTIF(11,11) + (EJT(IE) * AJT * FAC2)
     ESTIF(12,12) = ESTIF(12,12) + (EJT(IE) * RIZ * FAC4)
     ESTIF(13,13) = ESTIF(13,13) + (GJT(IE) * RIT * FAC2 /
  1                          (SPJT**2))
     I1 = (IE -1)*19 +1
     I2 = IE * 19
     J = 0
     DO 120 I = I1,I2
     J = J+1
120  SG(J) = SVEC(IKM,I)
   CALL DGMATV (ESTIF,SG,SG1,19,19,19)
     J = 0
    DO 140 I = I1,I2
     J = J+1
140  XF(IKM,I)  = XF(IKM,I) - SG1(J)

    IF (IE .LE. NST) THEN
    CALL STIF12(IE,IK,IN)
    K = 0
    I1 = (IE - 1)*19 + 14
    I2 = I1 +11
    DO 160 I = I1,I2
    K = K+1
160  SG(K) = SVEC(IKM,I)
    CALL DGMATV (EK12,SG,SG1,12,12,12)
    K = 0
    DO 180 I = I1,I2
    K = K+1
180  XF(IKM,I) = XF(IKM,I) - SG1(K)
    END IF
200  CONTINUE
    END IF

    IF (IN .NE.IK) THEN
    INM = IN
    IF (NSTEP .EQ. 2) INM = (IN +1)/2

    DO 290 IE = 1,NJT

    IF (IE .LE. NST) THEN
    CALL STIF12(IE,IK,IN)
```

```
      K = 0
      I1 = (IE - 1)*19 + 14
      I2 = I1 +11
      DO 260 I = I1,I2
      K = K+1
 260   SG(K) = SVEC(IKM,I)
      CALL DGMATV (EK12,SG,SG1,12,12,12)
      K = 0
      DO 280 I = I1,I2
      K = K+1
 280   XF(INM,I) = XF(INM,I) - SG1(K)
      END IF
 290   CONTINUE
      END IF
 300   CONTINUE

C APPLIES THE BOUNDARY CONDITIONS TO THE LOAD VECTOR  XF(IKO,M)

       IF (NBC.NE.0) THEN
       DO 330 I = 1, NBC
        NE = IBC(I,1)
        IDOF = IBC(I,2)
        M = (NE - 1) * 19 + IDOF
C ------------------------------
       DO 330 IK = 1,NM,NSTEP
       IKM = IK
       IF (NSTEP .EQ. 2) IKM = (IK+1)/2
        XF(IKM,M) = 0.0
 330   CONTINUE
       END IF

      DO 365 IK =1,NM,NSTEP
      IKM = IK
      IF (NSTEP .EQ. 2) IKM =(1+IK)/2
      DO 365 I = 1,NEQ
 365   SVEC(IKM,I) = SVEC(IKM,I) - SVEC2(IKM,I)

       RETURN
       END

C ***************************************************
C THIS SUBROUTINE IS TO MULTIPLY A RECTANGULAR  M  BY  N
C MATRIX BY A VECTOR OF LENGTH  N .
C ***************************************************
      SUBROUTINE DGMATV(A, V, W, M, N, NDIMA)
       IMPLICIT DOUBLE PRECISION (A - H, O - Z)
      REAL*8 A(NDIMA,1), W(1), V(1)
      DO 10 I = 1, M
       W(I) = 0.D0
       DO 10 J = 1, N
  10 W(I) = W(I) + A(I,J) * V(J)
      RETURN
```

```
      END
C ***************************************************************
C  SUBROUTINE RESULT EVALUATES THE DEFLECTIONS AND STRESSES IN THE
C  JOIST AND PLATE COVER OF THE T-BEAM STRIP.
C ***************************************************************
      SUBROUTINE RESULT
       IMPLICIT DOUBLE PRECISION (A - H, O - Z)
      PARAMETER (MJT = 10, MEQ = 190, MSZ = 3610, MOZ = 1296)
      PARAMETER (MFT = 4, MLD = 12, MBC = 20, MPF = 20)
      PARAMETER (MSP = 9, MFO = 6, MNP = 378)
      COMMON /B00/ PI, PI2, PI4, TOL
      COMMON /B03/ ETA(6), GWT(6)
      COMMON /B04/ NM, NSTEP, NFT, NJT, NST,NEQ, LHB, NSZ,NA1
      COMMON /B05/ XL, SPJT
      COMMON /B06/ EJT(MJT), GJT(MJT), BJT, HJT, AJT, RIY, RIZ, RIT
      COMMON /B07/ PTK, PEX, PEY, PG, PVXY, PVYX, PKX, PKY, PKV, PKG,
     1          PDX, PDY, PDV, PDG
      COMMON /B08/ CKPAL, CKPER, CKROT, SPC,XIN
      COMMON /B10/ XPTF(MPF), PTF(MPF),NPTF
      COMMON /B13/ GSTIF(MFT,MSZ), ASTIF(MFO,MOZ),
     1          XF(MFT,MEQ),FF(MFT,MEQ),RFF(MFT,MEQ),SVEC(MFT,MEQ),
     3          SVEC1(MFT,MEQ),SVEC2(MFT,MEQ),XFX(MFT,MEQ),EK(8,8)
      COMMON /B15/  EX(MSP),EY(MSP),EZ(MSP),NAN,NP,MNL
      COMMON /B17/  ICH(MSP,MNP),ICH1(MSP,MNP),SL(12),
     1          DDX,DDZ,FX,FZ,TOLL,NNA
      COMMON /B18/  SIGMAY,WDX1(MSP),WDX2(MSP),
     1           WDY1(MSP),WDY2(MSP),WDZ1(MSP),WDZ2(MSP)
      DIMENSION   F(MEQ), WB(19), WS(19), ST(19), WP(38), S1T(19),
     1          S1M(19),S1B(19),S2T(19),S2M(19),S2B(19)
C ---------------------------------------------------------------

       WRITE(3,*)
       WRITE(3,*)'                    **************'
       WRITE(3,*)'                    SUMMARY OUTPUT'
       WRITE(3,*)'                    **************'
       WRITE(3,*)
       WRITE(3,*)'WDY IS MAX. RELATIVE DISPL. IN Y-DIRECTION'
       WRITE(3,*)'WDZ IS MAX. RELATIVE DISPL. IN Z-DIRECTION'
       WRITE(3,*)
       WRITE(3,1161)PTF(1)
1161    FORMAT(1X,' POST TENSION FORCE = ', E12.5)
       WRITE(3,*)
       WRITE(3,*)' SIGMAY = ',SIGMAY

      WRITE(3,2)
 2    FORMAT(1X,'IE',4X,'SIGMAY',9X,'WDY1',9X,'WDY2',9X,'WDZ1',11X,
     1      'WDZ2')
      WRITE(3,*)
       DO 3 IE =1,NST
3      WRITE(3,4)IE,SIGMAY,WDY1(IE),WDY2(IE),WDZ1(IE),WDZ2(IE)
4      FORMAT(1X,I3,3X,E10.4,3X,E10.4,3X,E10.4,3X,E10.4,3X,E10.4)
```

```
      WRITE(3,*)
C ------------------------------------
      IF (NAN .EQ.1) THEN
      WRITE(2,*)
      END IF
      IF (NAN .EQ. 0) THEN
      WRITE(2,*)
      WRITE(2,*)'  ELASTIC LINEAR ANALYSIS  '
      END IF
     WJMAX = 0.0D0
     SJMAX = 0.0D0
     WPMAX = 0.0D0
     SPMAX = 0.0D0
     ALPHA = 1.2D0

C LOOP OVER EACH T-BEAM STRIP

     DO 170 IE = 1, NJT
C ------------------------------------.
C  EVALUATING DEFLECTIONS AND STRESSES IN THE JOISTS.

      DO 10 I = 1, 19
       WB(I) = 0.0D0
       WS(I) = 0.0D0
       ST(I) = 0.0D0
 10   CONTINUE
      DO 40 IK = 1, NM, NSTEP
       PIN  = PI  * IK
       PINL = PIN / XL
       IKO = IK
       IF (NSTEP .EQ. 2) IKO = (IK + 1) / 2
       DO 20 I = 1, 19
        J = ((IE - 1) * 19) + I
        F(I) = SVEC(IKO,J)
 20    CONTINUE
C ------------------------------------
       FACS = EJT(IE) * ((HJT * F(10) * (PINL**2) / 2.0D0) -
     1                 (F(11) * PINL))
       FAC1 = CKPAL / (2.0 * GJT(IE) * PINL * BJT * SPC)
       FACW = EJT(IE) * ((PINL * HJT)**2) / (12.0D0 * GJT(IE))
       FACW = FACW + (CKPAL * (HJT + PTK)) /
     1              (4.0D0 * GJT(IE) * BJT * SPC)
       FACW = (FACW * F(10)) - (FAC1 * (F(7) - F(11)))
       FACW = ALPHA * FACW
       DO 30 I = 1, 19
        XIL = DSIN(I*PIN/20)
        WB(I) = WB(I) + (F(10) * XIL)
        WS(I) = WS(I) + (FACW  * XIL)
        ST(I) = ST(I) + (FACS  * XIL)
 30    CONTINUE
 40   CONTINUE
C ------------------------------------.
```

```
      WJB = 0.0D0
      WJS = 0.0D0
      WJT = 0.0D0
      STJ = 0.0D0
      DO 50 I = 1, 19
       IF (DABS(WB(I)) .GE. DABS(WJB)) WJB = WB(I)
       IF (DABS(WS(I)) .GE. DABS(WJS)) WJS = WS(I)
       WT = WB(I) + WS(I)
       IF (DABS(WT)    .GE. DABS(WJT)) WJT = WT
       IF (DABS(ST(I)) .GE. DABS(STJ)) STJ = ST(I)
   50  CONTINUE

C  EVALUATING DEFLECTIONS AND STRESSES IN THE PLATE COVER.

      DO 60 I = 1, 19
       S1T(I) = 0.0D0
       S1M(I) = 0.0D0
C ----------------
       S1B(I) = 0.0D0
       S2T(I) = 0.0D0
       S2M(I) = 0.0D0
       S2B(I) = 0.0D0
C ----------------
   60  CONTINUE
      DO 62 I = 1,38
   62  WP (I) = 0.0D0
C ------------------------------
      EPC = PEY / (1.0D0 - (PVXY * PVYX))
      DO 130 IK = 1, NM, NSTEP
       PIN =  PI * IK
       PINL = PIN / XL
       IKO = IK
       IF (NSTEP .EQ. 2) IKO = (IK + 1) / 2
       DO 70 I = 1, 19
        J = ((IE - 1) * 19) + I
        F(I) = SVEC(IKO,J)
   70   CONTINUE
C ------------------------------
       HT = PTK / 2.0D0

       FAC1T = (F(6) / SPJT) - (PVYX * PINL * F(3)) -
     1       ((-HT) * ((-46.0D0 * F(1) ) + (14.0D0 * F(14)) +
     2            ( 32.0D0 * F(10)) - (12.0D0 * F(2) ) -
     3            (  2.0D0 * F(15)) - (16.0D0 * F(9) )) /
     4       (SPJT**2)) + (PVYX * (-HT) * F(1) * (PINL**2))

       FAC1M = (F(6) / SPJT) - (PVYX * PINL * F(3)) -
     1       ((0.0) * ((-46.0D0 * F(1) ) + (14.0D0 * F(14)) +
     2            ( 32.0D0 * F(10)) - (12.0D0 * F(2) ) -
     3            (  2.0D0 * F(15)) - (16.0D0 * F(9) )) /
     4       (SPJT**2)) + (PVYX * (0.0) * F(1) * (PINL**2))
```

```
      FAC1B = (F(6) / SPJT) - (PVYX * PINL * F(3)) -
     1      ((HT) * ((-46.0D0 * F(1) ) + (14.0D0 * F(14)) +
     2           ( 32.0D0 * F(10)) - (12.0D0 * F(2) ) -
     3           ( 2.0D0 * F(15)) - (16.0D0 * F(9) )) /
     4      (SPJT**2)) + (PVYX * (HT) * F(1) * (PINL**2))
C ---------------------------------------------------
      FAC2T = (((-1.5D0 * F(5)) + (1.50D0 * F(18)) -
     1        (0.25D0 * F(6)) - (0.25D0 * F(19))) / SPJT) -
     2        (PVYX * PINL * F(7)) + ((HT / (SPJT**2)) *
     3        ((8.0D0 * F(1) ) + (8.0D0 * F(14)) -
     4         (16.0D0 * F(10)) + F(2) - F(15))) -
     5        (PVYX * HT * F(10) * (PINL**2))

      FAC2M = (((-1.5D0 * F(5)) + (1.50D0 * F(18)) -
     1        (0.25D0 * F(6)) - (0.25D0 * F(19))) / SPJT) -
     2        (PVYX * PINL * F(7)) + (((0.0) / (SPJT**2)) *
     3        ((8.0D0 * F(1) ) + (8.0D0 * F(14)) -
     4         (16.0D0 * F(10)) + F(2) - F(15))) -
     5        (PVYX * (0.0) * F(10) * (PINL**2))

      FAC2B = (((-1.5D0 * F(5)) + (1.50D0 * F(18)) -
     1        (0.25D0 * F(6)) - (0.25D0 * F(19))) / SPJT) -
     2        (PVYX * PINL * F(7)) + (((-HT) / (SPJT**2)) *
     3        ((8.0D0 * F(1) ) + (8.0D0 * F(14)) -
     4         (16.0D0 * F(10)) + F(2) - F(15))) -
     5        (PVYX * (-HT) * F(10) * (PINL**2))

      FAC1T = FAC1T * EPC
      FAC1M = FAC1M * EPC
      FAC1B = FAC1B * EPC
      FAC2T = FAC2T * EPC
      FAC2M = FAC2M * EPC
      FAC2B = FAC2B * EPC

      DO 120 I = 1, 19
        XIL = DSIN(I*PIN/20)
        S1T(I) = S1T(I) + (FAC1T * XIL)
        S1M(I) = S1M(I) + (FAC1M * XIL)
        S1B(I) = S1B(I) + (FAC1B * XIL)
        S2T(I) = S2T(I) + (FAC2T * XIL)
        S2M(I) = S2M(I) + (FAC2M * XIL)
        S2B(I) = S2B(I) + (FAC2B * XIL)
 120    CONTINUE
C ---------------------------------------
      DO 122 I = 1,19
        XIL = SIN(I*PIN/20)
 122      WP(I) = WP(I) + (F(1) *XIL)
      DO 124 I = 20,38
        XIL = SIN((I-19)*PIN/20)
 124      WP(I) = WP(I) + (F(14)*XIL)
C ---------------------------------
 130  CONTINUE
```

```
      WPC = 0.0D0
      S1 = 0.0D0
      S2 = 0.0D0
      S3 = 0.0D0
C ------------------------
      S4 = 0.0D0
      S5 = 0.0D0
      S6 = 0.0D0
C ------------------------
      DO 140 I = 1, 19
       IF (DABS(S1T(I)) .GT. DABS(S1)) S1 = DABS(S1T(I))
       IF (DABS(S1M(I)) .GT. DABS(S2)) S2 = DABS(S1M(I))
       IF (DABS(S1B(I)) .GT. DABS(S3)) S3 = DABS(S1B(I))

       IF (DABS(S2T(I)) .GT. DABS(S4)) S4 = DABS(S2T(I))
       IF (DABS(S2M(I)) .GT. DABS(S5)) S5 = DABS(S2M(I))
       IF (DABS(S2B(I)) .GT. DABS(S6)) S6 = DABS(S2B(I))

 140   CONTINUE
      DO 144 I = 1,38
 144   IF (DABS(WP(I)) .GT. DABS(WPC)) WPC = WP(I)
C
C  PRINTING OUT RESULTS.
C
      WRITE (2,155) IE
 155   FORMAT (/, ' ** ELEMENT ', I2, ' **')
      WRITE (2,160) WJB, WJS, WJT, STJ, WPC, S1,S3,S4,S6
 160   FORMAT (' MAX. JOIST DEFLECTION (BENDING)  = ', E12.5, /,
   1        ' MAX. JOIST DEFLECTION ( SHEAR )  = ', E12.5, /,
   2        ' MAX. JOIST DEFLECTION ( TOTAL )  = ', E12.5, /,
   3        ' MAX. JOIST BENDING STRESS        = ', E12.5, /,
   4        ' MAX. COVER DEFLECTION            = ', E12.5, /,
   5        ' MAX. COVER STRESS (NODE 1 TOP)   = ', E12.5, /,
   7        ' MAX. COVER STRESS (NODE 1 BOTTOM)= ', E12.5, /,
   8        ' MAX. COVER STRESS (NODE 2 TOP)   = ', E12.5, /,
   9        ' MAX. COVER STRESS (NODE 2 BOTTOM)= ', E12.5   )
C ------------------------------------
      WRITE (3,155) IE
      WRITE (3,161)  WJT, STJ, WPC

 161   FORMAT (' MAX. JOIST DEFLECTION ( TOTAL )  = ', E12.5, /,
   3        ' MAX. JOIST BENDING STRESS        = ', E12.5, /,
   4        ' MAX. COVER DEFLECTION            = ', E12.5, )

C ------------------------------
      IF (DABS(STJ) .GE. DABS(SJMAX)) SJMAX = STJ
      IF (DABS(WJT) .GE. DABS(WJMAX)) WJMAX = WJT
      IF (DABS(WPC) .GE. DABS(WPMAX)) WPMAX = WPC
      IF (DABS(S1) .GE. DABS(SPMAX)) SPMAX = S1
      IF (DABS(S3) .GE. DABS(SPMAX)) SPMAX = S3
      IF (DABS(S4) .GE. DABS(SPMAX)) SPMAX = S4
      IF (DABS(S6) .GE. DABS(SPMAX)) SPMAX = S6
```

```
 170 CONTINUE

C  SUMMARY OF THE ANALYSIS.

    WRITE (2,180) WJMAX, SJMAX, WPMAX, SPMAX
 180 FORMAT (///, 1X, 12('*'), ' SUMMARY OF FLOOR ANALYSIS ', 11('*'),
   1        //, ' MAX. JOIST DEFLECTION              = ', E12.5, /,
   2           ' MAX. JOIST STRESS                 = ', E12.5, /,
   3           ' MAX. COVER DEFLECTION              = ', E12.5, /,
   4           ' MAX. COVER STRESS BETWEEN JOISTS    = ', E12.5   )
    WRITE(2,90)
  90 FORMAT (/,1X, 50('*'))
    RETURN
    END
    END
```

D.2 PTB.DAT

```
** PTB ** PTB ** PTB ** PTB **
7 3 1                                FOURIER   NO. JOIST   SYMMETRIC
12000.0 1000.0                         XL, SPJT
100.0 500.0                           BJT,HJT
14000.00 14000.00 14000.00
17.0                                 REG
100.0 .5 .65                          PTK, EMUX,EMUZ
14000.00 1400.00 1000.00 0.02 0.20          PEX,PEY,PG,PVXY,PVYX
10.0 0.0 1.0E06 1.0E06 1.0E06               SPC,XIN,CKPAL,CKPER,CKROT
3.0,2.0                              TAOSX,TAOSZ
1 21 1                               NAN, NP, MNL
16.9E+01 16.9E+01                        EX(I)
1.00E+10 1.00E+10                        EY(I)
17.4E+01 17.4E+01                        EZ(I)
4
1 4500.00 5000.0 200.0 500.0 1.00-01   DX1 = DY1 = DZ0 = 15
1 7000.00 7500.0 200.0 500.0 1.00-01   DX1 = DY1 = DZ0 = 15
2 4500.00 5000.0 200.0 500.0 1.00-01   DX1 = DY1 = DZ0 = 15
2 7000.00 7500.0 200.0 500.0 1.00-01   DX1 = DY1 = DZ0 = 15
10
2.0E5 78.53 10.0 2.0                     ES AS DIP  RFAC
600.0 1.00e+05
1800.0 1.00e+05
3000.0 1.00e+05
4200.0 1.00e+05
5400.0 1.00e+05
6600.0 1.00e+05
7800.0 1.00e+05
9000.0 1.00e+05
10200.0 1.00e+05
11400.0 1.00e+05
0
```

D.3 PTB.OUT

```
************************ FLOOR ANALYSIS PROGRAM ************************

PROBLEM TITLE: ** PTB ** PTB ** PTB ** PTB **

NUMBER OF FLOOR JOISTS        =   3
NUMBER OF FOURIER TERMS USED   =   4
MAX. ORDER OF FOURIER TERM     =   7


PROPERTIES AND DIMENSIONS OF JOISTS
JOIST SPAN      = 0.12000E+05
JOIST SPACING   = 0.10000E+04
JOIST WIDTH     = 0.10000E+03
JOIST DEPTH     = 0.50000E+03
JOIST NO. =  1  EJT = 0.14000E+05   GJT = 0.82353E+03
JOIST NO. =  2  EJT = 0.14000E+05   GJT = 0.82353E+03
JOIST NO. =  3  EJT = 0.14000E+05   GJT = 0.82353E+03


PROPERTIES AND DIMENSIONS OF PLATE COVER
COVER THICKNESS  = 0.10000E+03
KX =  0.11714E+10  KY =  0.11714E+09
KV =  0.23427E+08  KG =  0.83333E+08
DX =  0.14056E+07  DY =  0.14056E+06
DV =  0.28112E+05  DG =  0.10000E+06


PROPERTIES FOR CONNECTORS
STIFFNESS PARALLEL TO JOIST      = 0.10000E+07
STIFFNESS PERPENDICULAR TO JOIST  = 0.10000E+07
ROTATIONAL STIFFNESS FLANGE/JOIST = 0.10000E+07
SPACING BETWEEN CONNECTORS       = 0.10000E+02


APPLIED TRANSVERSE LOADING
JOIST    X1          X2          Y1          Y2          LOAD
 1  0.45000E+04  0.50000E+04  0.20000E+03  0.50000E+03  0.10000E+00
 1  0.70000E+04  0.75000E+04  0.20000E+03  0.50000E+03  0.10000E+00
 2  0.45000E+04  0.50000E+04  0.20000E+03  0.50000E+03  0.10000E+00
 2  0.70000E+04  0.75000E+04  0.20000E+03  0.50000E+03  0.10000E+00
POST TENSIONING FORCES
X-LOC     FORCE
 0.60000E+03  0.10000E+06
 0.18000E+04  0.10000E+06
 0.30000E+04  0.10000E+06
 0.42000E+04  0.10000E+06
```

```
  0.54000E+04   0.10000E+06
  0.66000E+04   0.10000E+06
  0.78000E+04   0.10000E+06
  0.90000E+04   0.10000E+06
  0.10200E+05   0.10000E+06
  0.11400E+05   0.10000E+06


 NO. OF BOUNDARY CONDITIONS =   0

THREE DIMENSIONAL SPRING BETWEEN TWO T- BEAMS  42

STIFF. OF THE SPRING IN X-DIC.
    JOINT NO. =  1   EX =  0.86224E+05
    JOINT NO. =  2   EX =  0.86224E+05
STIFF. OF THE SPRING IN Y-DIC.
    JOINT NO. =  1   EY =  0.10000E+11
    JOINT NO. =  2   EY =  0.10000E+11
STIFF. OF THE SPRING IN Z-DIC.
    JOINT NO. =  1   EZ =  0.88776E+05
    JOINT NO. =  2   EZ =  0.88776E+05
 FRICTION COEFFICIENT OF THE COVER (X-DIC.) = 0.50000E+00
 FRICTION COEFFICIENT OF THE COVER (Z-DIC.) = 0.65000E+00
 STIFFNESS OF THE POSTENSIONING CABLE =  0.20000E+06
 THE AREA OF THE POSTENSIONING CABLE =  0.78530E+02
 THE DISTANCE BETWEEN THE CABLE TEETH =  0.10000E+02
 THE RELAX FACTOR OF THE CABLE  =  0.20000E+01
 THE TURN NO. REQUIRED   =  0.41773E+01


** ELEMENT  1 **
MAX. JOIST DEFLECTION (BENDING)  =  0.12558E+02
MAX. JOIST DEFLECTION ( SHEAR )  =  0.12855E+01
MAX. JOIST DEFLECTION ( TOTAL )  =  0.13843E+02
MAX. JOIST BENDING STRESS        =  0.56304E+01
MAX. COVER DEFLECTION            =  0.13665E+02
MAX. COVER STRESS (NODE 1 TOP)   =  0.10653E+01
MAX. COVER STRESS (NODE 1 BOTTOM)=  0.99706E+00
MAX. COVER STRESS (NODE 2 TOP)   =  0.96243E+00
MAX. COVER STRESS (NODE 2 BOTTOM)=  0.87784E+00

** ELEMENT  2 **
MAX. JOIST DEFLECTION (BENDING)  =  0.13133E+02
MAX. JOIST DEFLECTION ( SHEAR )  =  0.15197E+01
MAX. JOIST DEFLECTION ( TOTAL )  =  0.14652E+02
MAX. JOIST BENDING STRESS        =  0.64713E+01
MAX. COVER DEFLECTION            =  0.13660E+02
MAX. COVER STRESS (NODE 1 TOP)   =  0.17037E+01
MAX. COVER STRESS (NODE 1 BOTTOM)=  0.80633E+00
MAX. COVER STRESS (NODE 2 TOP)   =  0.11909E+01
MAX. COVER STRESS (NODE 2 BOTTOM)=  0.69862E+00
```

```
** ELEMENT  3 **
MAX. JOIST DEFLECTION (BENDING)  =  0.80606E+01
MAX. JOIST DEFLECTION ( SHEAR )  =  0.81426E+00
MAX. JOIST DEFLECTION ( TOTAL )  =  0.88749E+01
MAX. JOIST BENDING STRESS        =  0.35843E+01
MAX. COVER DEFLECTION            =  0.11385E+02
MAX. COVER STRESS (NODE 1 TOP)   =  0.15598E+01
MAX. COVER STRESS (NODE 1 BOTTOM)=  0.77819E+00
MAX. COVER STRESS (NODE 2 TOP)   =  0.94627E+00
MAX. COVER STRESS (NODE 2 BOTTOM)=  0.91086E+00


************ SUMMARY OF FLOOR ANALYSIS ***********

MAX. JOIST DEFLECTION            =  0.14652E+02
MAX. JOIST STRESS                =  0.64713E+01
MAX. COVER DEFLECTION            =  0.13665E+02
MAX. COVER STRESS BETWEEN JOISTS =  0.17037E+01

**********************************************
```

D.4 PTBB.OUT

```
************************ FLOOR ANALYSIS PROGRAM ************************

PROBLEM TITLE: ** PTB ** PTB ** PTB ** PTB **

NUMBER OF FLOOR JOISTS        =   3
NUMBER OF FOURIER TERMS USED   =   4
MAX. ORDER OF FOURIER TERM     =   7

                 **************
                 SUMMARY OUTPUT
                 **************

WDY IS MAX. RELATIVE DISPL. IN Y-DIRECTION
WDZ IS MAX. RELATIVE DISPL. IN Z-DIRECTION

 POST TENSION FORCE =  0.10000E+06

SIGMAY =   0.83333333333333
IE   SIGMAY       WDY1       WDY2       WDZ1       WDZ2

  1  0.8333E+00  -.2473E-05  -.3233E-05  0.8878E-02  0.8878E-02
  2  0.8333E+00  -.2487E-05  -.3222E-05  0.1018E-01  0.1018E-01


** ELEMENT  1 **
 MAX. JOIST DEFLECTION ( TOTAL ) =  0.13843E+02
MAX. JOIST BENDING STRESS       =  0.56304E+01
MAX. COVER DEFLECTION           =  0.13665E+02

** ELEMENT  2 **
 MAX. JOIST DEFLECTION ( TOTAL ) =  0.14652E+02
MAX. JOIST BENDING STRESS       =  0.64713E+01
MAX. COVER DEFLECTION           =  0.13660E+02

** ELEMENT  3 **
 MAX. JOIST DEFLECTION ( TOTAL ) =  0.88749E+01
MAX. JOIST BENDING STRESS       =  0.35843E+01
MAX. COVER DEFLECTION           =  0.11385E+02
```