Development, Scale-up and Commercialization of Chemical and Biological Processes

– The Engineer's Perspective –

Sergio Berretta, P.Eng

Vancouver, Canada

Development, Scale-up and Commercialization of Chemical and Biological Processes
– The Engineer's Perspective -

This work is available at
http://hdl.handle.net/2429/80255/Development, Scale-up and Commercialization of Chemical and Biological Processes – The Engineer's Perspective/

DOI: 10.14288/1.0403818

■

Table of Contents

Module 1

An Introduction to the Development, Scale-up and Commercialization of Chemical and Biological Processes – The Engineer's Perspective –

[An introduction to the content of the all modules, and overall objectives of the notes]

Module 1 – An Introduction to the Development , Scale-up and Commercialization of Chemical and Biological Processes

Through the last many decades, much has been published in the areas of development and commercialization of technologies. The vast majority covers the business aspects of technology commercialization, as for example the business plan, market studies, funding strategies, commercialization proposal, etc. In fact, there are complete university programs dedicated to teaching how these business areas should be handled and managed, and how they all tie together in the commercialization of technology. On the other hand, the technical aspects of how a technology is developed and scaled up, more specifically the integrated approach of these activities, has received far less attention. This is particularly the case in the development and commercialization of chemical and biological process technologies. In Industry, the presumption is that scientists or research engineers know, or ought to know, how to move their process innovations from the idea phase up to a level where they can formally hand it out to an engineering design company that then successfully scales it up to its commercial introduction. Another presumption is that design engineers working for such engineering design companies know, or ought to know, how to translate research results into complete processes or plant designs. As we will discuss in detail through these modules, both are rarely the case. Scientists and research engineers usually do not understand the mutual format in which their R&D results should be presented to design engineers, or the actual data that design engineers need to do their designs. On the other hand, design engineers seldom understand the complexity or subtlety of R&D results, which may involve statistical models or dimensional models or other forms of analyzing and/or presenting data. It is often assumed that they should all know, and while most engineers on both sides of the development and commercialization effort understand some aspects, this is typically not enough, often leading to regrettable translation outcomes.

The purpose of these notes is to present, at a high level, the technical objectives and work that is used in completing the different phases of a process development and scale-up project, from the idea phase to the commercial introduction of the technology. From the perspective of a research engineer, these notes should provide valuable insight on what design engineers do through a process development project, and what R&D data and information they need to do their work. From the perspective of a design engineer, these notes should provide insight on what research engineers do and what the outcome of their work means in regards to the potential ultimate design of a process technology.

From the technical side point of view, the successful commercialization of a process technology involves the integration of research, development and engineering plant design, which is knowledge that few companies possess as a whole. Groups that have this wide range of knowledge tend to be trailblazers of innovation, as chemical companies such as BASF or Bayer continue to demonstrate. Unfortunately, the current approach to process technology development, especially in North America where most large chemical companies have downloaded or significantly downsized their research and/or development and/or engineering departments, is to farm out one or more of these technical activities, which can work if done carefully and right, but often leads to failure.

In large chemical and biological process companies where there is a vertical integration of activities from R&D to commercial implementation and operation of diverse processes, the technical knowledge to move a process innovation efficiently through the development and scale-up pathway, which forms part of commercialization efforts, is typically present. For small and medium companies, or large companies not vertically integrated, the knowledge is seldom there. Figure 1 shows the typical scale-up and development phases involved in moving a novel process technology from its idea phase to its commercial implementation. Each of these phases is associate with a Technology Readiness Level (TRL). In the chemical and biological process innovation area, these TRLs can be defined as:

- TRL 0 – An innovation idea has been generated and stated. This is the start of the *Idea Phase*.

- TRL 1 - Experimental work and proof of the innovation has been started or completed. This remains part of the *Idea Phase*, and moves into the *Bench-scale Phase.*

- TRL 2 – An integrated process concept for the innovation has been proposed and investigated at a high level. This forms part of the *Bench-scale Phase.*

- TRL 3 – The innovation has been analyzed, within the proposed integrated process concept, through a detailed techno-economic assessment (TEA), and further bench-work has been completed to de-risk some of the technical challenges identified through the TEA. We are now in the *TEA Phase.*

- TRL 4 - The process has been experimentally validated by integrated larger experimental set-ups. This is the start of the *Pilot Phase.*

- TRL 5 – Process validation and completion of technical de-risking has been done in larger prototypes or pilot plants. We are still in the *Pilot Phase*.

- TRL 6 – R&D results and data have been translated into a complete engineering plant design package. We are now in the *Engineering and Commercial Plant Analysis Phase*.

- TRL7 – First demonstration plant for the technology has been commissioned. We are now in the *Demonstration Plant Phase.*

- TRL 8 – First commercial plant has been commissioned. This is the start of the *Commercial Scale Phase.*

- TRL 9 – The technology has successfully penetrated the market. We are at the end of the *Commercial Scale Phase.*

The different development phases are sometimes referred to as discovery, concept, feasibility, development, implementation, and deployment phases. Other professionals may also use different terminologies, but through these modules, we will refer to the phases as per the details outlined in Figure 1.1.

An important first point to make is that when it comes to the development and scale-up of process technologies, poor technical knowledge on what it takes to move a technology through the development and scale-up pathway can be financially very costly. Compared with the development of IT technologies, chemical/biological processes in general take much longer and a lot more capital to move forward. Mistakes are often measured in the millions of dollars. To provide some perspective, Table 1.1 presents a comparison of typical timelines and costs associated with the development and commercialization of biological or chemical processes against IT and biomedical technologies.

Table 1.1 – Innovation Costs, Timelines, and Uncertainty[1]

	Development Time (years)	Research Costs ($ million)	Commercialization Costs ($ million)	Technology Uncertainty
IT	0-3	0-4	1-15	Low
Biomed	10-17	5-15	300-1000	Very High
Chemical Processes	5-17	2-25	50-600	High

Success and timelines in the development of a process technology are dependent on many factors, such as familiarity with the technology being developed and the market being targeted. Table 1.2 presents some perspective on how technology familiarity and market familiarity can affect a chemical process development project – amended from Miremadi (1) based on the experience of the author of these notes.

Table 1.2 – Effect of Technology and Market Knowledge on Technology Commercialization

Degree of Market Familiarity	Low	*Product extension into new market*	*New product into new market*
		Success rate 25-45%	Success rate 15-25%
		Time to commercialization – 2-8 years (average 5)	Time to commercialization – 8-20 years (average 14)
	High	*Product extension into existing market*	*New product into existing market*
		Success rate 35-55%	Success rate 30-45%
		Time to commercialization – 2-6 years (average 4)	Time to commercialization – 6-17 years (average 11)
		High	Low
		Degree of Technology Familiarity	

[1] Amended from Source: Maine and Seegopaul (2016), **Nature Materials**

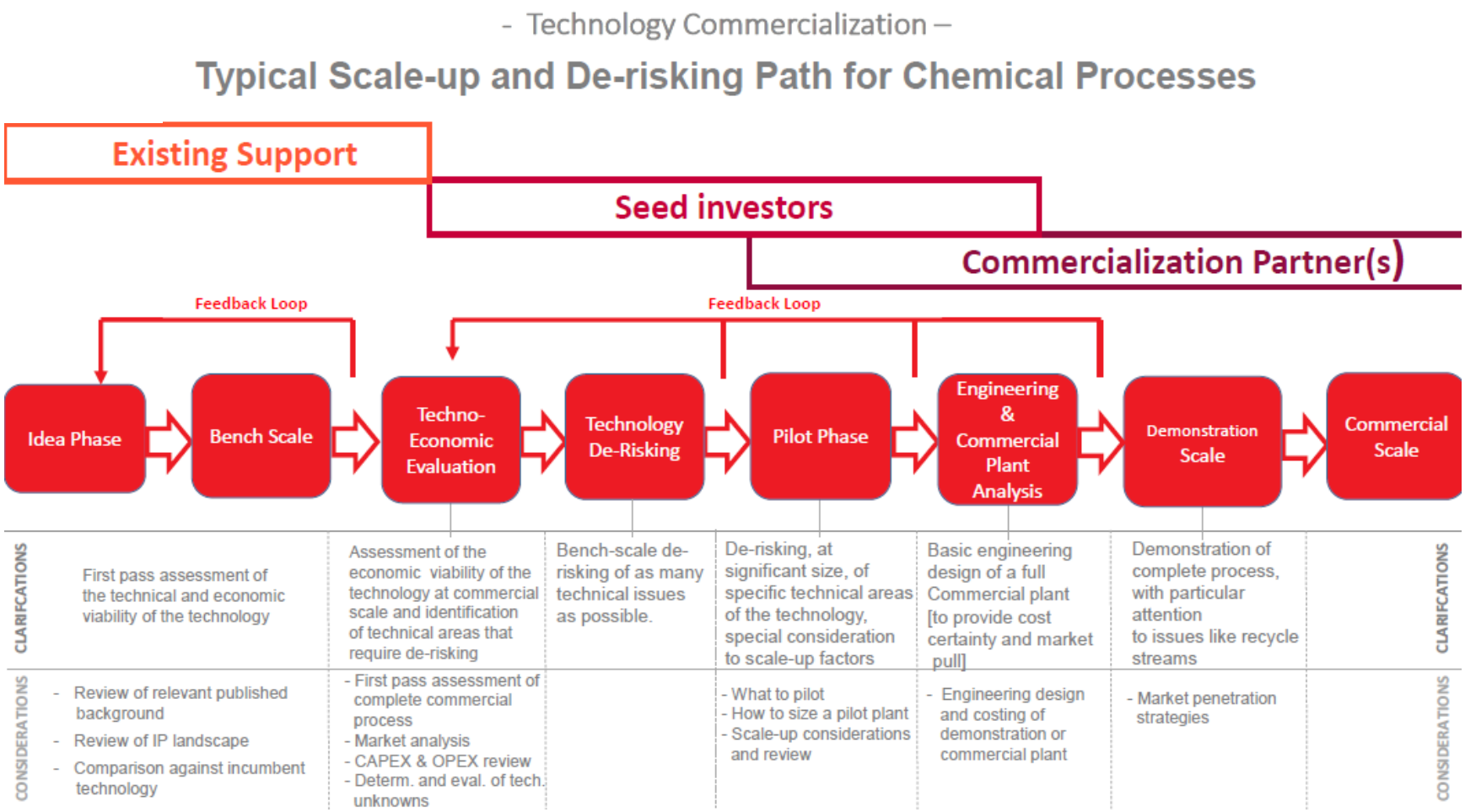

Figure 1.1 – Typical Process Development and Commercialization Path for Process Technologies

Ultimately, much of the development and commercialization success of a process technology rests on the experience of the project team.

Through the different modules of these notes, we will review each of the development and scale-up phases, with an emphasis on the technical aspects. Furthermore, some comments on the business requirements and, in more detail, on the intellectual property needs are also introduced. We are trying to cover a very large canvas of knowledge. Therefore, the presented material should be understood as an introduction to the different subjects. References are presented for the reader to dive into any specific area of interest.

The starting point for the content of these notes is that the innovator (i.e., idea creator) has conceived a novel idea that may have a potential commercial, or altruistic, benefit. She or he has completed laboratory work or modeling work to prove the concept. Much of the research is already done or on-going, we are now moving into the development phase of the project.

In module 2, we will review how to do a first-pass assessment of a novel process technology based on bench-scale lab results and/or open literature data.

We will integrate the innovation into a process, mainly in the form of a Block Flow Diagram (BFD). We will then use the BFD to perform a first pass assessment of the technology using available data and information, from the bench-work or the open literature. More specifically, we will review how to perform a first-pass economic evaluation of the technology, check its development feasibility, and perform a high-level health and safety and environmental review to understand possible liabilities associated with it. We are also going to discuss briefly what aspects of an IP review should be completed at this phase.

In module 3, we will assume that the technology under development received a passing mark from its first assessment at the *Idea Phase*, and we are going to examine how to perform a techno-economic analysis (TEA) on the technology. Through this review, we are going to introduce the reader to the concepts of life-cycle analysis (LCA) and green chemistry principles. The outputs from the TEA are typically a detailed economic evaluation of the technology, based on many assumptions that need to be confirmed, and a detailed list of technical development risks as identified through the review. As we will discuss, many of these risks can be mitigated by circling back to the bench-work, performing calculations, or reviewing the open literature. However, some will likely require the design and construction of prototypes or pilot plants.

The TEA is versatile assessment tool that goes beyond providing techno-economic results. As we will discuss, it also summarizes the technical findings required to start developing a well-structured and defendable technology development program.

In module 4, we will assume that the technology received a passing mark from the *TEA Phase*, and we will move into the *Pilot Phase*. It is in the *Pilot Phase* that all remaining technology development risks are typically studied in detail and scale-up models for the technology developed. These models are used to move the technology to larger and larger sizes. Through this module, we will review scale-up techniques, with an emphasis on *Fundamental Scale-up Techniques* and *Empirical Scale-up Techniques*. We will also examine what considerations need to be addressed when designing a pilot plant. A number of industrial rules-of-thumb will be introduced.

In Module 5, we will assume that the technology received passing marks from the *Pilot Phase* of the development pathway, and move the technology into the *Engineering and Commercial Plant Analysis Phase*. It is here that we will dive into one of the most delicate areas of the process development phase, which is the translation of all the research and development results, including any models and reports, into a preliminary engineering design package. This is the design package that should be provided to an engineering design company for them to prepare the Front End Engineering Design (FEED) package. It is the FEED package that is later used to prepare the detailed design package for the technology. There are a total of three engineering sub-phases here that we will review, both their purpose and their output. It is through these three engineering phases that the technology is moved from a pilot plant concept into a full commercial realization. Finally, we will dive deeper into what to consider when developing an IP position or strategy for the technology, work that usually starts at the TEA phase of the project and firms up through this phase.

In Module 6, we will deviate from the technical side and complete our review of the development and scale-up pathway for process technologies by briefly discussing market penetration strategies and funding. Arguably, the highest hurdle that must be overcome in the commercialization of a process technology is market acceptance, more precisely finding a partner or customer that will allow anyone, for the very first time, to introduce his or her technology into their plant or chemical complex. One must understand that most chemical and biological industries are highly integrated, with any upsets in any part of a process immediately impacting downstream processes. Chemical or biological plants, and associated processes, are typically worth hundreds of millions and sometimes billions of dollars. It is for this reason that chemical and biological industries tend to be very conservative. Proving that a novel technology was run successfully at the pilot plant scale is worth something, but unfortunately not much when it comes to market acceptance. Most people would be misguided to think otherwise. To introduce a new technology into these industries requires creativity. Through this module, we will explore some strategies that have been successfully used.

We will finally complete module 6 by exploring funding opportunities for the development of process technologies in Canada. Funding opportunities are plentiful, and from the government funding side, Canada stands out. There are many federal and provincial agencies providing funding for the development of process technologies. Each agency has its own objectives. Proper alignment with those objectives is important to enable funds successfully. Therefore through Module 6, we will introduce some of the more prevalent agencies or groups.

Through all these modules, we will consistently develop one specific example through the TRLs to clarify points and improve the learning experience. Specifically, we are going to follow the development of the novel adiabatic process for the production of nitrobenzene introduced in the early 1990's, a technology that the author of these notes is very familiar with. We will follow that technology from its idea phase in the late 1980's to its successful commercialization in the early 1990's. However, the reader is forewarned that some of the facts presented are not necessarily accurate. They have been modified to improve the learning experience.

Let us get started.

References

1- Miremadi M., Musso C., Oxgaard J., *Chemical Innovation: An Investment for the Ages*, McKinsey on Chemicals Report

Module 2

A Review of the Idea and Bench-scale Phases of a Chemical and Biological Process Development Project – The Engineer's Perspective –

Module 2 – A Review of the Idea and Bench-scale Phases of a Chemical and Biological Process Development Project

In regards to chemical and biological processes, development and commercialization projects start with a process idea, which in general is conceived and verified at the bench scale. In the context of these notes, chemical and biological processes include chemical, biological, petrochemical, environmental, mining and clean-tech processes. The process idea itself may have originated in any number of ways: a spark of inspiration, an unexpected experimental result, literature research, discussions with colleagues/clients, or others. And most times the early stage work would have involved a lab experiment, whether to generate the idea or verify it. In any case, the assumption moving forward is that the innovator (i.e., idea creator) has conceived a novel idea that may have a potential commercial, or altruistic, benefit. As an engineer, the development activities to take the idea to the commercial introduction involve a number of steps that are closely connected and that can be grouped as follows:

- Development of a complete process[2] around the idea
- Engineering of tasks involved in the scale-up of the process from idea to full commercial
- Assessment of technically and commercially feasibility of the process technology

As the development work moves forward through the scale-up and commercialization phases shown in Figure 2.1, we are constantly moving back and forth among these three groups of activities through multiple feedback loops.

It all starts at the Idea Conception Phase, or simply the Idea Phase. Through this module we will be exploring the typical checks, reviews and tasks performed through the early stages of a process development project. We are doing this through an engineering perspective. However, it is important to stress that a successful process development project involves both engineering and business considerations. Even though the business side of the equation is not covered through these notes, relevant comments on business activities are raised where relevant.

As a starting point, we are assuming that a thorough literature review was completed, which typically happens in the early stages of a development project. However, we will touch on patent reviews from the point of view of assessing the novelty and commercial feasibility of the innovation being developed. The overhanging assumption is that we have successfully completed the research phase (i.e., the discovery phase) and are now going to assess if moving the technology into the development phase is warranted. Let us start at the Idea Phase.

[2] "process" refers to the integration of unit operations for the processing of compounds to a final product

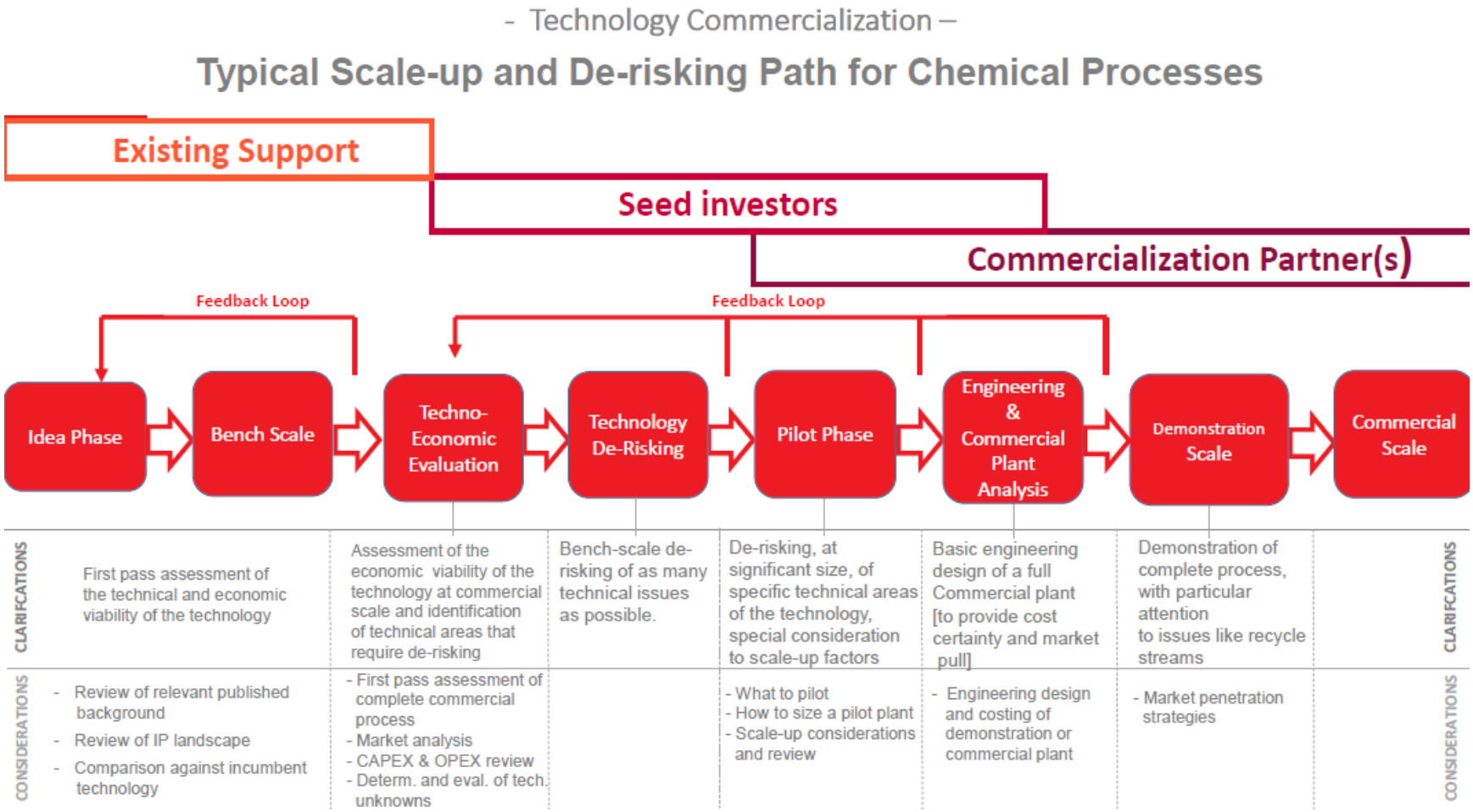

Figure 2.1 – Typical Process Development and Commercialization Path for Process Technologies

2.1 Activities and Checks at the Idea/Bench Scale Phase

As previously stated, the on-going assumption is that the novel process idea has been proven at the bench-scale (i.e., sufficient experimental results are available), but we are yet to show commercial viability, even at a high level. So, we are now interested in assessing the commercial feasibility of the current state of the process technology, which is an important first step before moving the technology into the development phase.

As a starting point, it is useful to understand that as we move through the development path proving or improving the commercial viability of the process, we will typically find that the technology moves substantially from its initial technical concept. This shift is driven by issues not typically considered at the early discovery phase of a project, such as technical constraints, government regulations, market considerations, business reasons, etc. The process development of a technology is an ever evolving and shifting activity that requires flexibility. As an example to the previous point, let us look at the development work of a process involving a reaction. At the bench-scale, the development work may focus on the optimization of yields or reaction rate. However as the development progresses, other considerations may come up that may trump initial optimization targets (i.e., yield or reaction rate). Some examples of other process technical considerations may be material of construction constraints or reaction heat management.

An industrial example of technical constraints affecting the development objectives of a process technology is the 1990's development of high temperature thermolysis reactors for the destruction of environmental pollutants from the wastewater stream generated in industrial nitration plants. This wastewater contains high concentration of toxic compounds such as nitrophenols, a by-product of nitrobenzene production, or nitrocresols, a by-product of dinitrotoluene production. In those reactors being developed in the 1990's, the destruction rate (i.e., reaction rate) of the nitrophenols or nitrocresols grows exponentially with temperature, and in short lab experiments, it was shown that temperatures well in excess of 340 ºC were very beneficial in keeping reaction rates very high. However, subsequent pilot testing showed that material of construction constraints for long-term operation (i.e., low corrosion rates) constrained the maximum industrial operating temperature to 310 ºC, significantly slowing the reaction rate. The point to be made from this example is that investing a lot of effort in optimizing a process technology at the idea phase of a project may not necessarily be the best development approach. Once a good set of conditions for the process are found, it is typically more effective to move along the process development path and let the development exercise optimize the process as the technology moves up the Technology Readiness Levels (TRL).

All this said, some amount of optimization work at the idea/bench-phase should take place and the use of design of experiments (DOE) techniques such as factorial analysis are usually efficient techniques to minimize the number of experiments required for that work. As references, the technical papers from Hockman K.K. (1) and Murphy T.D. (2) provide good introductory papers into factorial analysis techniques.

Let us now move into the assessment activities that takes place at the idea phase of a project. At the idea/bench scale stage of a project, some high level assessment activities takes place (i.e., some initial de-risking work), but little or no scale-up work has yet started. In general, three key criteria are reviewed around the process innovation:

- Economic potential
- Development feasibility
- Safety, health, and environmental issues

The development feasibility criterion deals or investigates issues such as:

- Competitive landscape (e.g., does the idea exist already?)
- Technology readiness for the different steps of the process (i.e., is there any part of the process for which technology does not exist?)
- Materials of construction constraints
- Fabrication or construction constraints
- The development and time-to-market timeframe requirements

A more extensive list of considerations around the development feasibility of a process technology is presented in Appendix A.

Any process technology would likely not move from the idea phase if some aspect of the process requires technology (e.g., a material of construction for the reactor) that does not yet exist, or if the process equipment cannot be sensibly built with existing fabrication techniques or technology, or if the development and time-to-market is too long. If any of these constraints materializes, the process technology would be parked at the research phase, or would be dropped all together.

Many years ago, a development company approached the technology development organization this author was employed at to work on the scale-up of their bench-scale reactor which needed to operate at extremely high pressures. In general, small bench-scale equipment can sensibly handle high pressures, but as high pressure equipment is scaled up their wall thicknesses increase dramatically[3]. In this particular case, the commercial scale reactor was in need of very thick walls, beyond what existing equipment manufacturers anywhere in the world could produce – i.e., rolling into shape. This led to expensive casting as the only fabrication path forward for this technology, and that led to the end of the development work.

Bound by the three key technology review criteria described above, the main objective through the idea phase of a project is to broadly assess if the technology has commercialization potential by evaluating what is known and is published up to this point, and this involves both a technical and high level economic evaluation. The typical activities completed at this stage of the project involves:

- Task 1 - Development of a Block Flow Diagram (BFD) for the process idea
- Task 2 - Evaluation of reference cases (i.e., competitive industrial processes)
- Task 3 - High level economic evaluation for the developed BFD
- Task 4 - Review of industrial process product specifications
- Task 5 - High level Safety Health and Environmental (SHE) review of the process
- Task 6 - Evaluation of the intellectual property (IP) position and landscape

[3] *for a specific design pressure, the wall thickness increases approximately linearly with the diameter of the vessel – so a 6" diameter bench-scale high pressure reactor that needs ¼" walls for the process, would need 2.5" thick walls for a commercial reactor diameter of 5'.*

In the next sections, we will work through these tasks and look at how these tasks shape the review process of the technology at the Idea Phase. In general, the first pass economic assessment of the process technology is based on the findings from tasks 1 through 5; and the high level development feasibility review of the process technology is based on the findings from tasks 2, 4, 5, and 6. On a high level, the BFD allows us to develop a simple mass balance on the process idea, and later on reference cases (i.e., incumbent industrial processes). Once some dollar values are determined for the cost/prices of the mass inputs and outputs out of the BFDs, a simple economic comparison between the process idea and the reference cases can be accomplished. A review of the industries' product specifications (i.e., for the product out of the process idea) and SHE requirements provide a basic understanding of the complexity that the overall process may need to meet specific product specifications and/or specific emission limits or safety standards. Finally, the IP landscape review provides a first pass understanding of whether or not the process idea has legal room to be commercialized, or how it may need to be modified to have such room, we are talking about "freedom to operate".

Market and business assessments of the technology are typically not done at this stage of the project. It is too early.

2.1.1 Development of the Process Block Flow Diagram (BFD)

Let us now look at how BFDs are used to assess a process technology at the idea phase.

The conversion of raw materials into products typically involves a number of steps. Each step accomplishes a specific intermediate transformation. By transformations we mean a significant process change – e.g., reaction, separation, purification, etc. Within each of these transformation steps, typically a number of unit operations are involved (e.g., a specific separation step such as a distillation step may include a column, a condensers, a reboilers, pumps, etc.). Once the individual transformation steps are selected, these get interconnected to form or create the overall process.

On a BFD, transformation steps are typically shown as blocks, and the compounds or materials flowing among them are shown as lines/arrows. Again, it is important to note that within each block there may be a number of unit operations. As an example, Figure 2.2 shows a BFD for a simplified nitrobenzene production process. In this figure, we see three blocks for the overall

process: reaction, catalyst regeneration, and product purification. Within each of those blocks there are a significant number of unit operations, but until we develop the process further we do not yet know what those are.

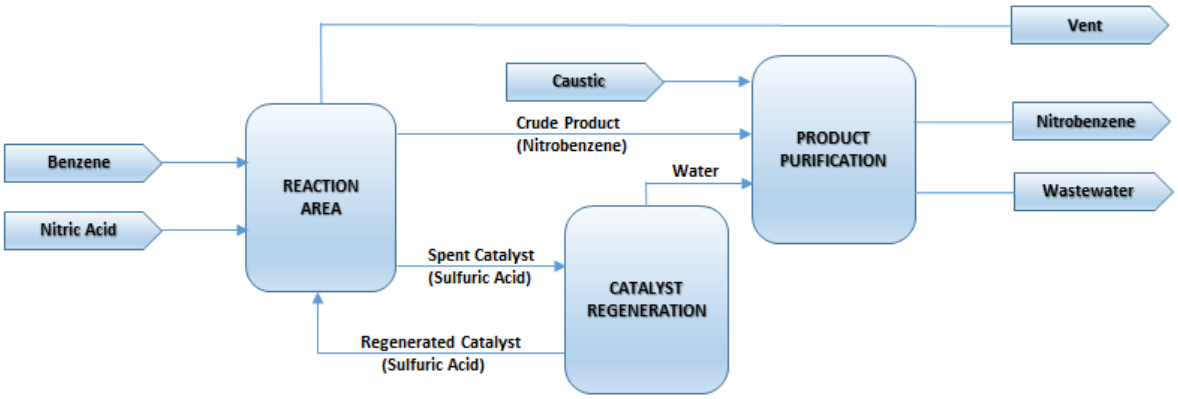

Figure 2.2 – BFD of a Simplified Nitrobenzene Production Process

A BFD is typically used as a starting point to develop a simplified mass balance for the process. A mass balance is simply a summary of the mass flows in and out of each block, and its estimation or calculation usually involves the development of a mathematical model that can represent or predict the transformations within each BFD block. On a continuous steady state process, the sum of the flows in is equal to the sum of the flows out. As an example and based on open literature data, Figure 2.3 shows the addition of the mass balance to the BFD of Figure 2.2.

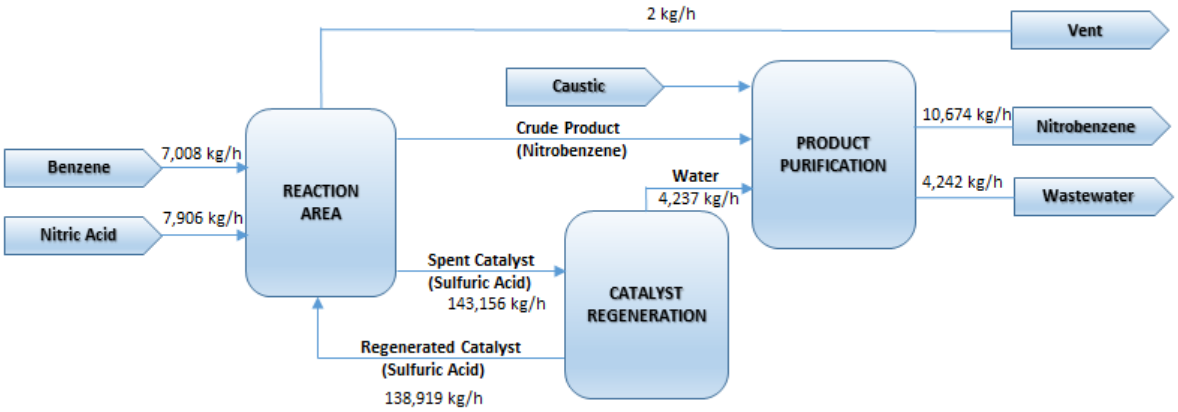

Figure 2.3 – Mass Balance around the BFD of Figure 2.1

On a process development project, a BFD with a mass balance is a simple representation of the process, limited to what is known up to that point. In its simplest form, the mass balance on a BFD provides sufficient data to perform a high level first pass, although rather simplistic, economic assessment of the process. For example, by comparing the product price against the reactant costs, we can assess if there is a positive economic potential for the process. Of course, there is much more to eventually assess (e.g., cost dealing with waste streams), but if the economic potential is already negative at this point, then the commercial viability of the process is likely unattractive.

To make some of the above points clear, let us work through the development example project introduced in Module 1. [4]

By the early 90's, the inventor of the today's state-of-the-art industrial nitrobenzene process had only completed a number of promising beaker tests on the reaction of benzene and nitric acid, under the presence of sulfuric acid, to produce nitrobenzene. The sulfuric acid acts as the catalyst of this reaction. The inventor was also very familiar with the performance of the incumbent technology used for the production of nitrobenzene at the time since the same inventor had designed some of the existing industrial production facilities. The incumbent industrial technology of the day already involved reactions of benzene and nitric acid under the presence of sulfuric acid but at significantly different process conditions. The inventor's development objective was to find a set of process conditions that would significantly decrease the by-product formation of the reaction, mainly nitrophenols and dinitrobenzene. Eventually, he succeeded to find better operating conditions and patented those process conditions in 1993 (US patent 5,313,009). At the time, he did not have a complete process, just what seemed to be an improvement of the reaction section of the nitrobenzene process. To move forward, he needed to assess (i.e, quantify) the benefits of his reaction conditions against the incumbent industrial process.

Let us now put some numbers to our example. For an arbitrary reactor production of 100,000 tons of nitrobenzene product per year, which today would be equivalent to the production rate of a small nitrobenzene production facility, the BFD for this initial analysis would have looked something like what is shown below in Figure 2.4 - based on the data presented by the inventor in his process patent. Table 2.1, based on Table 1 of the inventor's patent US 5,313,009,

[4] **As mentioned in Module 1, facts and data presented through this example may not be accurate. They may have been altered to enhance the learning outcome**.

summarizes the process conditions and performance. The overall mass balance of Figure 2.3 is based on the following proposed reaction pathways[5].

$$C_6H_6 + HNO_3 \Rightarrow C_6H_5NO_2 + H_2O \quad \text{(nitrobenzene formation)}$$

benzene *nitric acid* *nitrobenzene* *water*

$$3\,C_6H_6 + 8\,HNO_3 \Rightarrow 3\,C_6H_3(NO_2)_2OH + 7\,H_2O + 2\,NO \quad \text{(dinitrophenol formation)}$$

benzene *nitric acid* *dinitrophenol* *water* *nitrogen oxide*

$$3\,C_6H_6 + 11\,HNO_3 \Rightarrow 3\,C_6H_2(NO_2)_3OH + 10\,H_2O + 2\,NO \quad \text{(picric acid formation)}$$

benzene *nitric acid* *picric acid* *water* *nitrogen oxide*

$$C_6H_6 + 2\,HNO_3 \Rightarrow C_6H_4(NO_2)_2 + 2\,H_2O \quad \text{(dinitrobenzene formation)}$$

benzene *nitric acid* *dinitrobenzene* *water*

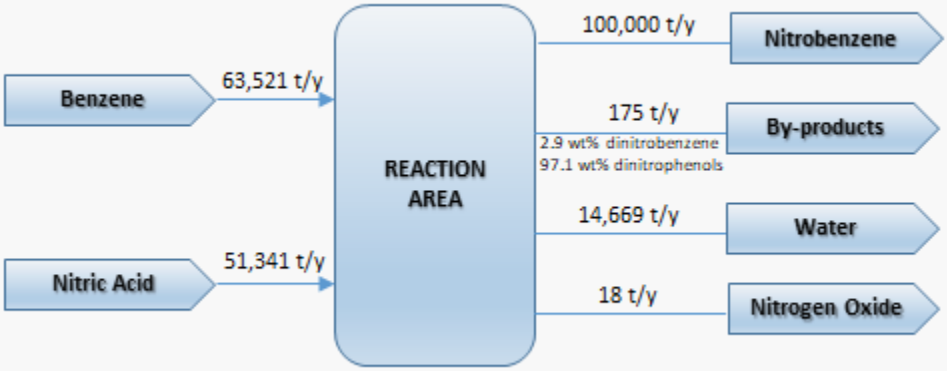

Figure 2.4 – BFD and Mass Balance for the Inventor's Nitration Process

[5] *The inventor's patents US 5,313,009 and US 5,963,878 indicate that nitrophenols, dinitrobenzene, and NOx is produced in the reaction. The proposed reactions are possible pathways for the production of these by-products that may not be realistic or accurate for this particular case, but they provide a platform for our discussion. However, it is important through a process development project that reaction pathways are well understood and accurate.*

Table 2.1 – Process Conditions Patented and Experimented with by the Inventor

Operating Conditions	
Catalyst Concentration (H2SO4 Conc.)	69.5 wt%
Nitric Acid Concentration*	2.8 wt%
Excess Reactant	Benzene
Final Product Attained Specification (by-product concentration)	
Dinitrobenzene Concentration	50 ppm
Picric Acid	Traces

**For clarity, nitric acid is typically mixed with the sulfuric acid before introducing the benzene. In the inventor's novel process conditions, the nitric acid concentration in the sulfuric acid before starting the reaction is 2.8 wt%.*

On the next sections, we will put some cost numbers to the above mass balance, and compare the performance against the incumbent process technology of the day.

2.1.2 Evaluation of Reference Cases

Depending upon the innovation being considered, an analysis against incumbent technology forms part of the next step of the development phase. But again, this depends upon the innovation being considered. For example, if the innovation involves the development of a process for the production of a new safe vaccine to cure an illness for which no cure exists, then the overall assessment is simpler than what we will be considering moving forward. In this case, the technology development is not constrained by competing technologies but by market and regulatory forces. However, complex technology development projects, which include most, also involve constraints imparted by competing and/or existing technologies. In the remaining of this module and next modules, we will consider the development of novel technologies in technical areas for which incumbent technologies already exist, which would expand the scope of our review.

At the early stage of the technology development process (i.e., following the discovery stage), assessing the commercial viability of the innovation takes a precedence. At a high level, this involves an operational economic comparison of the invention against the incumbent industrial

technology, or technologies. It only involves an operational economic comparison, and it does not include a capital cost comparison, because the BFD analysis completed up to this point only provides information on the flows in and out of the process but little or no information on the equipment involved in the process. Without further development work, we do not yet know all the equipment that will be required in the process. That said, it is at this stage that we are starting to highlight and evaluate steps in the process that may be significantly different from the incumbent technology. We want to identify potential novel steps or equipment that may add undue complexity to the process when compared to the incumbent technology. We are looking for development feasibility constraints.

A simple operating cost comparison is a first pass evaluation where the technology will either move ahead to the next phase of the development process or be dropped, or as a minimum be sent back to the research phase to improve its performance.

To properly compare the process under development against existing competitive technologies, we need to fully understand the incumbent industrial process or processes, which we may call at times the reference case or cases. The review of reference cases presents a real challenge in most situations, mainly because the information or data required to do the analysis is usually not available. We are trying to do a BFD and mass balance comparison, meaning that we are looking for feed and output data for specific reference cases, and that data is rarely published. As an experienced process developer, our job is to find sufficient data to get around this problem. Here are some hints on where to look. Let us start with a detailed web-search (e.g., literature or supplier info). If a web-search proves unsuccessful, then the following steps can be considered:

- Paid Market Analysis – some market analysis for specific technologies or processes provide the data required to perform the BFD comparison.

- Review of Patents – most commercial processes or technologies are protected by patents. These patents typically provide detailed performance data, which can typically be used to complete the performance analysis.

- Industrial Conference Presentations – industry typically presents in relevant conferences, and many times present data that is not typically available in the open literature. Reviewing conference proceedings can be a valuable resource.

- Industry Contacts – at times industry people are willing to share non-confidential data and information provided that its use aligns with their objectives. Industry contacts may include consultants and industry experts.

[For further sources look under Section 2.1.3.1, Gathering Chemical Pricing]

Let us now move back to our development example project. In this particular case, the inventor knew the performance (i.e., by-product formation on the context of this discussion) of incumbent industrial nitrobenzene reactors since he was involved in the design and commissioning of some commercial plants. However, his approach to reviewing the reference case was not to use the performance data he knew from commercial plants but rather to perform lab tests under published process conditions for the incumbent industrial process, using the same set-up he was using for testing his own new process conditions. This approach provided a true "apples to apples" performance comparison. Several publications such as Kirk-Othmer's Encyclopedia of Chemical Technology provided the process conditions used by industry at the time. Table 2.2, copied from the inventor's US patent 5,313,009, presents the industrial conditions experimented with, as well as the obtained performance. It also presents the best operating process conditions found by the inventor and the associated performance. Overall we can see that the inventor's proposed conditions led to a significant reduction in nitrophenol formation of approximately 62%.

Table 2.2 – Comparison of Performance of the inventor's Proposed Operating Conditions Against Typical Industry Operating Conditions (source – patent US 5,313,009)

TABLE 1

INDUSTRIAL SCALE COMPARISON OF
CONVENTIONAL ADIABATIC PROCESS AND PROCESS OF PRESENT INVENTION

	CONVENTIONAL ADIABATIC PROCESS Mixed Acid			PROCESS OF PRESENT INVENTION Mixed Acid		
	% HNO3 4.5	% H2SO4 63.5	% H2O 32.0	% HNO3 2.8	% H2SO4 69.5	% H2O 27.7
Impurities in Crude Product [PPM]						
DNB		50			50	
DNPH		1500			1700	
PA		3000			Trace or non-detectable levels	
Total NITROPHENOLS		4500			1700	

DNB - Dinitrobenzene
DNPH - Dinitrophenol
PA - Picric Acid (Trinitrophenol)

With the data of Table 2.2 and the reaction pathways presented in section 2.1.1, we can now proceed to build a BFD and simplified mass balance for the incumbent industrial process used in the production of nitrobenzene at the time. Figure 2.5 shows this BFD and mass balance.

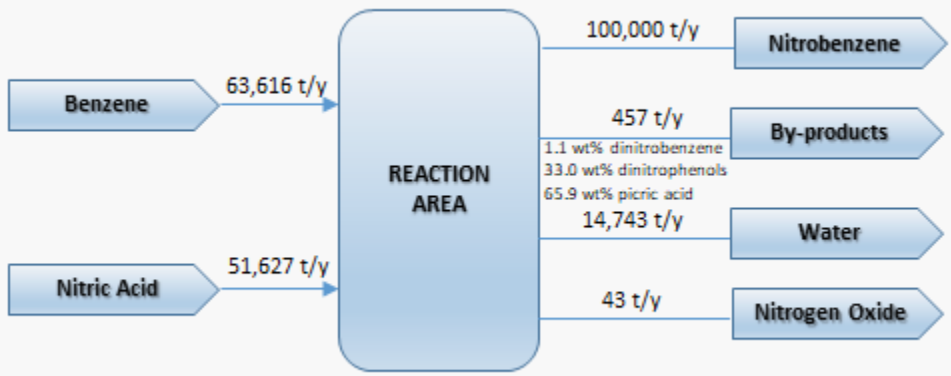

Figure 2.5 – BFD and Mass Balance for Incumbent Industrial Nitration Process

Comparing the BFD and mass balance between the incumbent process conditions and the inventor's new process conditions, we can state that the novel process conditions led to:

- 95 t/y of benzene savings - (0.15% reduction on benzene consumption)
- 286 t/y of nitric acid savings - (0.55% reduction on nitric acid consumption)
- 282 t/y of less by-products to deal with - (62% reduction in by-product formation)
- 74 t/y of less wastewater to treat – (0.50% reduction on generated wastewater)
- 25 t/y of less nitrogen oxide to scrub from the process vent – (58% reduction on nitrogen oxide formation)

For clarity and as further discussed under sections 2.1.4 and 2.1.5, it should be pointed out that in the nitrobenzene process

- nitrophenol by-products must be removed from the product nitrobenzene before it can be sold.
- Wastewater must be neutralized and treated to remove organics from it before it can discharged.
- The plant vent must be treated to remove nitrogen oxide before it can be released into the environment.

At this point, the question to ask is whether the improvements brought by the new process conditions discovered by the inventor were good enough to move the new process up the development ladder. Some further work, which will be covered in the next sections, is required to try to answer this question. However, nothing up to this point showed a development feasibility constraint on the technology since the novel process conditions from the inventor were not substantially different from those used by industry at the time.

2.1.3 Assessing the Invention Against Incumbent Technology

Once BFDs and mass balances for the process under development and the incumbent technology are developed, we are now ready to complete a first pass assessment to determine the commercial or technical benefits of the new technology. Many questions will remain unanswered but that is expected at this stage of development. Some of these questions will become apparent as we move through the next sections.

The next move is to assess the economic advantage of the new process. How to compare the technologies (i.e., the new process against the incumbent industrial technology) depends on the type of process we are assessing. When dealing with a separation or energy optimization technology, a separation efficiency or energy cost comparison is sufficient as a first pass. In the case of a novel process involving a reaction, we typically want to assess if the production cost has been improved. For that, chemical cost or price values for both reactants and product need to be gathered. Let us look at where that data can be found.

2.1.3.1 Gathering Chemical Pricing[6]

When looking for chemical pricing, we must differentiate between pricing for small amounts and bulk amounts. In most cases, when assessing process technologies we are mainly interested in the pricing of bulk chemicals. However, in the case of fine chemicals the pricing of small quantities may be of interest. Pricing for small amounts of chemicals is usually easy to obtain. One can look to any individual chemical vendor for pricing, or check one of the sources below to get prices from multiple companies at once.

- SciFinder

  SciFinder is a subscription based search engine, with a comprehensive chemistry database. It includes journal articles, patents, principles, reactions, substances, properties, and more.

- Reaxys

  Reaxys is also a subscription based web-based search and retrieval system for chemical compounds, bibliographic data and chemical reactions. The database originally combined data from the Handbook of Organic Chemistry, the Gmelin Handbook of Inorganic and Organometallic Chemistry, and the Patent Chemistry Database which is now updated directly from the source literature.

Obtaining pricing for bulk chemicals tend to be challenging, mainly because:

- Prices tend to change depending on quality, location, industry conditions, and other variables.
- Companies offering bulk quantities of chemicals are unlikely to share pricing with potential competitors.

[6] Amended from Source: University of Houston Library Website

- Chemical pricing information can be very valuable to a company, so it's often not free, or if available not widely published.

When searching for bulk pricing for a chemical, the use of business databases is a good start. Below are some business databases that contain articles on the chemical industry, and may occasionally include market information like pricing.

- Business Source Complete

  Full-text coverage plus indexing and abstracts for the most important scholarly business journals, including Harvard Business Review.

- ABI/INFORM Trade & Industry

  Search more than 750 business periodicals and newsletters with a trade or industry focus. Provides users with the latest industry news, product and competitive information, market trends, and a wide variety of other topics. Contains publications on every major industry, including finance, insurance, transportation, construction, and many more.

Other sources for pricing include individual chemical industry trade journals and magazines. Some examples are,

- Chemical & Engineering News
- ICIS Chemical Business
- Chemical Week
- Chemical Marketing Reporter

Web sources can also be a good source of pricing information. Some starting places are provided below, but the reader is encouraged to try a basic web search, too.

- ICIS Static Price List

  This site provides historical pricing for some common chemicals. These prices came from issues of ICIS Chemical Business published from 2006-2008.

- USGS Minerals Information

  This site provides information on mineral processing, including some pricing information.

- ICIS

  This site sells reports on the chemical industry in general. Sometimes valuable information can be found in their samples.

- IHS

  Like ICIS, IHS is a vendor of chemical industry information. Sometimes valuable information can be found in their samples.

An interesting place to also search for pricing of bulk chemicals is the UN trade (Comtrade) database. In it, the settling prices for a large number of trade goods, including chemicals, are recorded.

One final cautionary comment is that chemical pricing can change quickly and significantly, and not necessarily in agreement with the inflation noted in the overall economy. Scaling pricing using inflationary indices is not recommended.

2.1.3.2 Comparative Technology Economic Analysis

Let us now move in completing an operating cost comparison between the process under development and incumbent industrial processes. By now, we have completed the following:

- A BFD and mass balance for the process under development
- A BFD and mass balance for the incumbent industrial process
- Gathering of pricing for both raw materials and product

Let us now compare the technologies in more detail.

In general there can be a number of different matrices to compare technologies, but in the process industry they tend to fall into two camps: technologies with technical advantages or technologies with economic advantages. Some technologies may provide both types of advantages. Measuring the economic advantage of a technology, when no significant technical advantages are involved, leads to a relatively simple analysis (i.e., we are just looking at cost/price differentiation). Within technical advantages we can group everything that is not directly measured in dollars and cents (e.g., social impact, environmental impact, health and safety impact, etc.). However when technical advantages are involved then the analysis becomes more complex because it involves more fundamental questions such as "How much more would potential clients be willing to pay for my socially conscious product/process? How do I price the environmental impact of my product/process? Would the market pay a higher price for a technically superior product? etc." A good example of the latter was the development of needle-free blood glucose measuring devices for patients with diabetes. These are more expensive devices than the needle type and provide no better measurement of the glucose level in the blood. Through its development the technical advantage was clear, but so was its economic disadvantage. Knowing whether this product was going to successfully penetrate the market could not be estimated or predicted through hard numbers. Yet, in the end people's general apprehension to needles and <u>right pricing</u> (i.e., a reasonable higher price) made this more expensive and equally accurate product a success. The right pricing was key here, which typically depends on many mainly non-technical factors. For the remainder of this section we will concentrate on assessing economic advantages of a process which are more tangible and directly measurable.

Let us go back to our case study to explain how the first pass economic assessment of the technology is done. The overall mass balances for both the inventor's novel process and the reference case (i.e., incumbent technology) are show again in Figure 2.6.

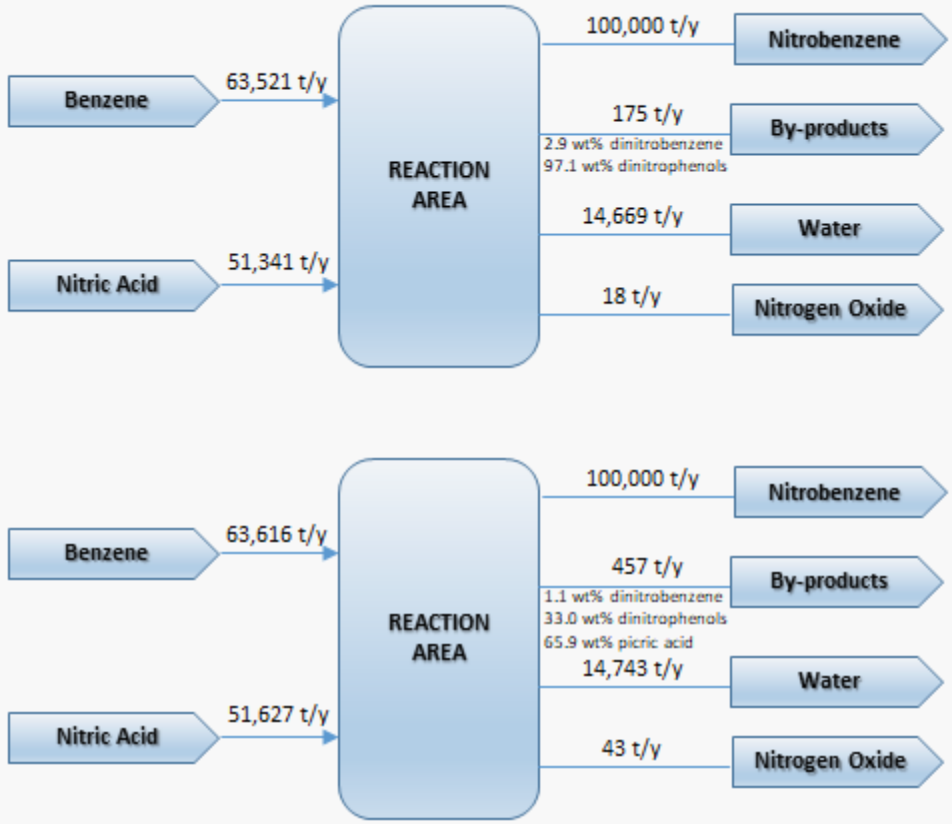

Figure 2.6 – BFDs and Mass Balances for the Inventor's Technology and the Incumbent Industrial Technology

The BFDs in Figure 2.6 show raw materials, product, and waste streams (i.e., reaction by-products). We do not yet understand or know how the wastewater or by-products produced will be handled or treated. Therefore, we cannot yet assess the differential operating cost of dealing

with them. However, we can assess the differential cost/price between feeds and product. For this analysis, the following costs for benzene and nitric acid are used[7],

Benzene = US$800/ton (2020 pricing – source, spglobal.com)
Nitric acid = US$242/ton (2017 pricing – source, Seider (9) page 436)

When trying to determine the price of the product, nitrobenzene, the analysis takes a twist. The reason is that most of all globally produced nitrobenzene is directly converted to aniline. This means that nitrobenzene plants are directly connected to aniline plants. Nitrobenzene is sold to aniline producers at long-term contract prices that are not disclosed. Therefore, there is no real price for bulk quantities of nitrobenzene. In fact, in many cases aniline producers are also nitrobenzene producers. Most of the sources summarized in section 2.1.3.1 would likely not provide a cost number for bulk quantities of nitrobenzene, with the exception of industry contacts. To obtain a representative price (i.e., internal pricing) for nitrobenzene, reaching out to industrial contacts was the only option. From information obtained through contacts, the sale price of nitrobenzene to a particular aniline production site was determined to be US$1,150/ton at 2020 prices[4]. We now have a number to work with.

Table 2.3 summarizes the first pass economic evaluation of the inventor's process innovation against the incumbent industrial process based on the mass balances performed and obtained chemical pricing. The analysis shows that the inventor's proposed process could save the nitrobenzene producer at least US$150,000 per year in raw material costs, on a production rate of 100,000 t/y of nitrobenzene. This is an improvement of 0.29% on the profit margin. Clearly, this first pass economic comparison shows that the inventor's proposed process is economically better, but just barely. On a first pass economic comparison, the results are not very attractive given that up to this point the process was only proven at a bench scale (i.e., still a lot of potential risk exist for any industrial user to seriously considered it). In many cases and based on the preliminary findings, the development project would have stopped at this point. However, a deeper look at the mass balance showed that the by-product formation was reduced by approximately 60% with these new process conditions, meaning that there were potential substantial capital cost savings, and some more operating cost savings, still to attain in the balance of plant (i.e., when also considering the product purification and waste treatment parts of

[7] These are 2020 and 2017 prices, which could be deflated to 1990's prices but are not in this analysis. However, accurate pricing is required through an analysis of this type when assessing new process technologies.

the process). It is the latter observation that pushed the inventor's project to the next phase of development.

Table 2.3 – First Pass Economic Evaluation of the Inventor's Nitrobenzene Process Against the Incumbent Nitrobenzene Process

	CASE	
	Guenkel Process	Incumbent Process
Nitrobenzene Production	100,000 t/y	100,000 t/y
Benzene Consumption	63,521 t/y	63,616 t/y
Nitric Acid Consumption	51,341 t/y	51,627 t/y
Product Revenue	US$115 million/y	US$115 million/y
Feed Costs	US$63.24 million/y	US$63.39 million/y
Cost Advantage	US$0.15 million/y	N/A

So how do we know if the market would be interested in the potential economic advantage of our process? Again, we are not looking at technical advantages here. Let me start answering this question as follows. The implementation of a process technology is made up of an initial investment and ongoing fixed and variable costs. The after-tax profit (i.e., cash flow) generated by the investment must produce an acceptable return on investment (ROI) based on corporate requirements. The cash flow would be represented by either a reduced cost or increased revenue, and generated from a number of process areas, including:

- Reduced operating costs
- Reduced raw material costs
- Increased production throughput
- Reduced energy costs
- Improved product quality

The key factor in the above discussion is the comment on "ROI based on corporate requirements". The required ROI for any possible investment changes from corporation to corporation and from industry to industry. As a generality, the author's industrial experience has shown that implementation/construction of a chemical processing plant on a green field[8] project typically moves ahead if a ROI of 6 to 9 years can be met. Yet the expected ROI on brown-field[9] projects is typically only 2 to 3 years. In the infrastructure industry or large industrial sites (e.g., power plants, mines, refineries), the expected ROI is in the range of 20 to 30 years. Pharmaceutical development projects expect an ROI of 1.5 years or less because of the low success rate involved with them. Similarly, oil and gas exploration projects expect an ROI of 3 to 4 years, also because of the risk involved on these projects. All this being said, assuming that all risks associated with a new technology have been mitigated, then almost any economic advantage against incumbent technology would be sufficient to gain the interest of a potential client on a green-field project. However, for a potential client to consider the installation of new technology, for which all risks had been mitigated, in an existing plant (i.e., technology that would replace an existing technology in a chemical plant – brown field project) the desired client's ROI would typically remain in the 2 to 3 years mark, as previously mentioned. In the case of the example that we have been following, that would mean that the complete cost (i.e., engineering, license feeds, construction, etc.) for replacing or upgrading the reactor of an existing nitrobenzene production facility would need to be below $450,000, based on the economic advantages summarized on Table 2.3 (i.e., three times the cost advantage shown on Table 2.3). This number will significantly change as we add more details to our review.

From the development example we have been following, one can see that there is some judgement involved in the assessment of whether or not a development project should move forward based on a first pass economic analysis. However, we can say with some certainty that a development project is unlikely to move forward if this first economic analysis, that we just completed, showed an overall cost disadvantage over the incumbent technology.

Let us finish this section by stating that experience has shown that the innovator, creator of the process or technology, should only be marginally involved in the assessment of whether the process or technology should move to the next level of process development, especially if significant judgement is involved. The innovator is typically too emotionally involved to make an objective decision. If significant judgment is required, then much process development and

[8] Green-field project means a project on a new site (i.e., a new chemical plant)
[9] Brown-field project refers to the introduction of technology into an existing facility

commercialization experience, including a good understanding of the market and technology, is required, and bringing that expertise into the development team, even on a consulting basis, is a smart investment.

2.1.4 Review of Industrial Process Specifications

Still within the idea phase/bench scale phase of the project, we are now going to try to add more high level details to the overall process to help our overall first pass evaluation. A typical additional step is to look at specifications that our product, or process, will need to industrially meet. This may provide some understanding of the potential degree of complexity required to purify our product, if any. Typical sources that can be reviewed to gather specifications requirements for different chemicals products are:

- Product specification sheets from chemical producers
- Open literature
- Patents

Of specific interest through this review is the determination of new or different by-products or quantities that our novel process may produce compared to the incumbent industrial technology. If there were some different quantities or types of by-products, then a further review will be required to understand if technology to remove and properly handle them are readily available or not. Again, we are looking for development feasibility constraints.

To better understand what is involved, let us look at our development example project. The nitrobenzene produced by the inventor's reaction conditions have the following specifications, as stated on the inventor's patent US 5,313,009:

- 50 ppm of dinitrobenzene
- 1700 ppm of nitrophenols

We can also assume that the product is also saturated with water as it leaves the reactor since water is a by-product of the reaction.

Now let us look at the industrial specification requirements. The nitrobenzene product specification sheet from Sadhana Nitro Chem Ltd.[10], a small industrial producer of nitrobenzene, indicates that their technical grade nitrobenzene has the following specifications:

- <50 ppm of dinitrobenzene
- <1,000 ppm of water

There is no mention of the nitrophenol specification that is met by this industrial producer. However, US patent 9,540,313 from Josef Meissner, a German nitration technology supplier, describes the purification process for industrial produced nitrobenzene. That patent calls for the nitrophenol concentration of the product nitrobenzene to be below 10 ppm.

According to Sadhana Nitro Chem's specification sheet, the water content of the product needs to be below 1,000 ppm. Therefore to understand if there is a need to deal with the water content in the product nitrobenzene, we need to gather solubility data (i.e., we know that the nitrobenzene from the reactor is saturated with water, but what is that water concentration?). Fortunately plenty of solubility data can be found in the open literature for most industrial chemical mixtures. From a paper by Smith (6), the solubility of water in nitrobenzene at room temperature is given as 2,600 ppm, which of course is significantly higher than the specification of 1,000 ppm that is desired in the final nitrobenzene product.

Based on the review, we now know that the product nitrobenzene must meet the following specification:

- Dinitrobenzene concentration < 50 ppm (Inventor's process – 50 ppm)
- Nitrophenol concentration < 10 ppm (Inventor's process – 1700 ppm)
- Water concentration < 1,000 ppm (Inventor's process – 2600 ppm)

We now also know that the overall process would need process steps to reduce the nitrophenol and water contents of the nitrobenzene produced in the reactor; not different than the incumbent technology that also produces nitrophenols but in larger amounts. The dinitrobenzene specification for the nitrobenzene product is already met by the inventor's process.

[10] This specification sheet was obtained through a web-search

Certainly, nothing up to this point showed a development feasibility constraint for the inventor since his novel process conditions produce the same types of by-products but at advantageously lower concentrations/amounts, meaning that the same process steps to purify the product would be required, but likely at a smaller scale.

2.1.5 High level Safety Health and Environmental Review of the Process Innovation

The implementation of process technology in an industrial setting leads to the need for proper environmental assessments as well as health and safety assessments. At this phase of the development project these types of assessments are typically limited to:

- Checking the health hazards of the compounds the process is dealing with
- Understanding the environmental emission limits, or banned substances, that may constraint the process

Of specific interest is the understanding of new or different by-products or quantities that our novel process may produce compared to the incumbent industrial technology, and their effect on health-safety-environmental hazards. If there are some identified issues, then further review will be required to determine if mitigation technologies are readily available. Again, we are looking for development feasibility constraints.

The assumption here is that laboratory experimentation took place through the discovery stage of the project and therefore the development team is familiar with the health hazards of the compounds being dealt with. The team is by now familiar with the Safety Data Sheets (SDS) for all reactants and products involved in the process, and therefore the team has a high level understanding of how the overall process may be affected. For example a reaction involving flammable compounds with high vapor pressures would dictate that the process is operated free of oxygen and/or potential ignition sources. Slowly we are starting to put some simple process constraints around our bench-scale process innovation.

We now turn to check how the process may affect the environment, and how environmental regulations will affect the process. Most industrial processes generate emissions, and moving forward we are assuming that the process we are interested in developing will have emissions too. At this stage of the project, we just want to understand the emission constraints the process will have. This information will allow the innovator to crudely assess how complex the overall process may need to be to meet emission standards. In general, a significant part of a process

plant is dedicated to cleaning effluents. They can make up substantial capital and operating costs. Therefore, it is important to start assessing the potential effect early on.

In the process industry, emissions involve any compound the process will discharge whether on soil, water or air. Emission limits are regulated by local governments through emission standards or regulations, and these standards and regulations change from country to country, province to province, and even region to region. Some types of emissions are regulated by both provincial and federal regulations. At this early stage of the process development, it is likely that we do not yet know where this process may be commercially implemented physically yet, so looking at local regulation is likely sufficient to understand how complex the process many need to be in meeting general environmental regulations. We are just trying to add more high level details to our process. Let us now move to see where we can gather initial emissions limit data and some relevant treatment costs.

In the province of British Columbia, soil, water and air quality is managed through a range of provincial acts and regulations (laws), including the Environmental Assessment Act. This act provides a mechanism for reviewing major projects to assess their potential impacts to the environment. On the air emissions side, it is the Ministry of Environment that is largely responsible for implementing the Air Quality Management System and address air pollution through codes, practices and standards, such as the Environment Management Act and Waste Discharge Regulation. Similarly on the wastewater emissions side, the Ministry of Environment regulates emissions through the Environment Management Act and the Municipal Wastewater Regulation. However the Act and Regulation provide only few emission limit numbers, and at this stage of our project we are more interested in finding potential emission limit targets that our process may need to meet. Some potential sources that provide some emission limit targets are presented later in this section.

Before moving forward, let us have a high level discussion on water and air emissions to provide background to our process development efforts. Water effluent treatment regulations typically specify levels of *Biochemical Oxygen Demand* (BOD) [11] or *Chemical Oxygen Demand* (COD)[12], or both, that a specific wastewater stream from a chemical process must meet before it can be discharged. It is now also common to also include toxicity specification to wastewater streams.

[11] *BOD is a standard test that measures the oxygen demand of specific microorganism when in contact with the wastewater over a specific period of time, typically five days.*

[12] *COD is a standard test that measures, through a chemical reaction, the oxygen required to oxidize the compounds in the wastewater. It is a faster test that a BOD test.*

This toxicity specification is set to limit the toxic effect of the effluent on some kind of living species in the area of discharge. Some common contaminants with regulated limits include:

- Nitrates
- Phosphates
- Organic nitrate compounds
- Organic sulfur compounds
- Heavy metals
- Halogenated organic compounds
- Specific contaminants (e.g., phenols)
- Suspended solids

The limits for each of the above contaminants are set on a case by case basis depending on the amount and area of discharge. As an example, the water emission guidelines for a significant number of compounds can be found under BC's Approved Water Quality Guidelines, including emission limits (https://www2.gov.bc.ca/gov/content/environment/air-land-water/water/water-quality/water-quality-guidelines/approved-water-quality-guidelines). The British Columbia Environmental Management Act section on Contaminated Sites Regulations, schedule 3.2, also provides some useful emission limit guidelines for some compounds in wastewater (www.bclaws.ca/civix/document/id/complete/statreg/375_96_08). Of particular interest are water quality guidelines for aquatic life since the wastewater generated by many processes will likely end up being discharged into an open water source[13]. [It should be noted that the numbers provided under the Environment Management Act, Aquatic Life, assume that a final 1:10 dilution takes place as the effluent enters the environment]. Once we know the limit to meet for the specific compounds in our wastewater, we can determine if our process will need further steps to decrease some or all of the contaminants present.

Whether or not the wastewater will also need further treatment to reduce its BOD content typically requires lab testing. However, there are some simplifications and assumptions that we can make at this phase of the project to get a simple answer to the BOD requirements. The BOD limit for most types of wastewater before they can be discharged are typically in the range of 10 to 45

[13] *Some wastewater effluents are alternatively sent to regional municipal water treatment facilities.*

mg/L[14]. So now let us crudely estimate the BOD of our wastewater stream. If the composition of the wastewater is known, then the *Theoretical Oxygen Demand* (ThOD) can be calculated from appropriate stoichiometric equations (i.e., convert all carbon molecules present in all compounds in the water to carbon dioxide). As a first level approximation, it can be assumed that the ThOD is equal to the COD. Now, the ratio of BOD to COD varies according to the contamination, and this ratio can vary between 0.05 to 0.8, depending on the chemical species - Eckenfelder (7). As a first level approximation assume the BOD of the wastewater is 80% of the COD, and therefore equal to 80% of the ThOD. This would be a high conservative estimate for the BOD of our wastewater. We will run through an example calculation later in this section.

Techniques and technologies to remove or reduce contaminants and BOD from wastewater are many and not the focus of this review. However, Chapter 26 on Smith (8) provides a good summary of process techniques to treat wastewater.

In many industrial cases, facilities only do pre-treatment of the wastewater, which may involve steps such a solid removal, pH adjustment, or stripping of most dissolved organics. The pre-treated effluent is then sent to large municipal waste water treatment facilities. This would typically involve an agreement specifying the monitoring and reporting requirements that the industrial facility is responsible for. It would also include the cost of the treatment. The typical cost varies between $2 and $3 per ton depending on municipality, plus a surcharge for any substance in the effluent exceeding specific limits. Table 2.4 shows surcharges fees for the city of Ottawa as an example.

Table 2.4 - Over Strength Surcharges Fees for the City Ottawa – 2019 values[15]

Parameters	Fees
Suspended solids	$0.81 per kg
Biochemical oxygen demand	$1.53 per kg
Phenolic compounds	$1.53 per kg
Phosphorus	$2.45 per kg
Kjeldahl nitrogen	$6.10 per kg

[14] *Higher BOD limits are allowed if the wastewater is sent a regional municipal waste water treatment facility with an associated cost, depending on BOD level, for treating the water.*

[15] *City of Ottawa website. Sewer Use Regulations for Business and Industry. Retrieved from http://ottawa.ca/en/residents/water-and-environment/sewers-and-sewage-treatment/sewer-use-regulations*

If actual data is not available, it is suggested to use $3 per ton of wastewater for large continuous flows. For smaller volumes trucked to a municipal treatment facility, the cost can be $40-$60 per ton, not including trucking services which as a rule of thumb it may add $15/m^3 ($94/BBL) per hour of transport once loading and unloading times are factored in. This cost comes from a year 2021 quote from the Iona Island water treatment facility in Vancouver, BC. For the specific case of the brine generated by oil and gas extraction fields which typically get disposed of in disposal wells, the cost varies from $3 to $15 per ton not including transportation.

Let us now continue to assess air emissions. Legislations typically control emissions from sources that are large enough to justify monitoring and inspection. Some common industrial pollutants of major concerns are:

- PM_{10} – Particulate matter less than 10 microns in diameter.
- $PM_{2.5}$ – Particulate matter less than 2.5 microns in diameter.
- Ozone
- VOC – Volatile organic compounds
- SO_x – Oxides of sulfur (SO_2 and SO_3)
- CO – Carbon monoxide
- CO2 – Carbon dioxide
- Dioxins and furans – Approximately 200 compounds that share similar chemical structures.

Air emissions are regulated by regional governments. In the case of the Lower Mainland region in BC, it is regulated by Metro Vancouver. Through By-law Air Quality Management Bylaw No. 1082, 2008, industry requires an air emission permit under almost all circumstances with a few exceptions including the following:

> "*the discharge is restricted to less than 100 kilograms per day of carbon monoxide, and less than 5 kilograms per day of each of the following: nitrogen oxides (expressed as nitrogen dioxide); and sulphur oxides (expressed as sulphur dioxide)"*

Emission limits are imposed on a case by case basis, based on an inventory of emissions and dispersion modeling. Under the Metro Vancouver permits website, http://www.metrovancouver.org/services/Permits-regulations-enforcement/air-quality/apply-permit/Pages/default.aspx, a long list of permits for the region is provided. These permits indicate the emission limits imposed for particular sites/industries. As an example, through that website we can find that a company called B.C. Roofing Products Ltd was given an air permit that allows them to discharge VOCs up to 102 mg/m^3. However, there are also varied sources of data spread through many government regulation documents. For example, Canada's Environmental Code of Practice for Base Metals Smelters and Refineries: Summary or Canada's Environmental Code of Practice for Metal Mines provide some useful emission numbers.

Techniques and technologies to remove or reduce contaminants from the flue gas of processes are many and not the focus of this review. However, Chapter 25 on Smith (8) provides a good summary of process techniques to treat gas emissions.

In regards to the cost for treating vents, the actual cost depends on the treatment selected. Typical treatments include scrubbing or thermal decomposition (i.e., burning or combustion). The cost also varies widely depending on the size of the application. The link below[16] connects to a spreadsheet developed by the EPA to estimate the vent treatment cost using thermal oxidizers.

In the case of both wastewater and air emissions, for compounds not listed by the government regulating the emissions, it usually falls on the emitter to work with scientists and government to establish the environmental standard that must be met. This can add significant cost and years to an industrial project.

Let us briefly discuss hazardous liquid and solid waste. In Canada, unless an industrial site operates an approved thermal oxidizer, hazardous liquid and solid waste must be handled by approved designated facilities. Any producer of hazardous liquids or solids needs to send their waste to these specialized facilities. For example, Swan Hills treatment centre in Alberta is the only treatment and disposal facility in Canada that is licensed to accept high level PCB's. The disposal cost varies widely depending on waste type and quantity. The author has heard of costs ranging from $300 to $800 per ton of hazardous waste at 2020 prices, not including transportation. However, the costs for industrial facilities operating their own thermal oxidizer can be in the range

[16] https://www.google.ca/url?sa=t&rct=j&q=&esrc=s&source=web&cd=&ved=2ahUKEwjuxqL6-NDrAhXLo54KHe8aBVkQFjAAegQIAhAB&url=https%3A%2F%2Fwww.epa.gov%2Fsites%2Fproduction%2Ffiles%2F2018-01%2Foxidizers_calc_sheet_finalversion_1-16-2018.xlsm&usg=AOvVaw22Y-UM9nNUeAGYEQTXzZS-

of $30 to $60 per ton. Non-hazardous solids can be incinerated in municipal facilities for costs of approximately $60-150/ton. As a further example, the City of Vancouver charges $200 per ton for the disposal of used gypsum (i.e., 2020 pricing), which gets send for deep burial at a landfill in the US. In contrast, municipal landfills charge approximately $80-120/ton for solid non-hazardous waste. For facilities where significant amounts of toxic waste is generated, the installation of a thermal oxidizer (i.e., an incinerator) to handle specific hazardous waste may be warranted. However, permitting for this thermal oxidizer can be lengthy and expensive.

Let us now go back to our development example project to see how health and safety and environmental issues may affect a development project at this stage. In our particular example, the inventor improved the conversion efficiency of an existing process (i.e., overall less emissions). Therefore a hard look at emission constraints would not be warranted at this stage. The inventor's proposed process conditions were also not that dissimilar to the incumbent technology to expect to have issues such as material of construction problems. As a result as one would expect, the inventor moved into the next phase of development with only a high level overview of environmental and safety issues. However, let us look at what a more in depth first pass review would have involved. From the health and safety side, from reviewing SDSs we can note that:

- Benzene (one of the reactants) is flammable
- Both benzene and nitrobenzene are carcinogenic
- Nitric acid (one of the reactants) and sulfuric acid (the catalyst) are corrosive. In fact, sulfuric acid is extremely corrosive at the reaction conditions proposed by the inventor.
- Nitrobenzene quickly absorbs through the skin and can lead to methemoglobinemia which is potentially deadly.
- Nitrophenols are unstable under dry conditions (i.e., explosive when dry).
- Direct contact of concentrated nitric acid with an organic (e.g., benzene) can lead to explosions.

Just the health and safety aspects noted above, tell us that we would be dealing with a complex process, where:

- Materials of constructions will have to be carefully assessed

- Flammability issues must be carefully considered through the whole process design
- Operator exposure to the chemicals must be avoided.
- By-products must be handled with care

Let us now look at the environmental side of the review. As shown in our BFD mass balance, the inventor's process produces air and wastewater emissions. The air emissions involve nitrogen oxide emissions which are regulated in most jurisdictions of the world. From the background provided above, we know that if more than 5 kg/day of NOx (1.8 tons/year) is emitted, a permit would be required in the Vancouver region; and through the Metro Vancouver website, previously mentioned above, we can find that an air permit was issued to a local refinery (Parkland – permit number GVA0117) in 2018 where the NOx emissions were limited to concentrations below 75 mg/m^3 with a total amount limit of 30 tons per year. In our example of a nitrobenzene production facility with a capacity of 100,000 MTPY (metric ton per year), the NOx emissions are 18 tons per year of highly concentrated NOx. Clearly, it is very likely that NOx abatement technology will need to be added to the process.

The wastewater emissions involve water contaminated with nitrobenzene, benzene, nitrophenols, dinitrobenzene, and acid. Clearly a neutralization step will be required. In regards to the potential organics that may be dissolved to some extent in the wastewater, BC's Approved Water Quality Guidelines limits benzene concentration in wastewater to 40 micrograms/liter, and the Environmental Management Act limits nitrobenzene concentration in wastewater down to 8 micrograms/liter. No information on emission limits is available for the other compounds. However, the available information already provides sufficient insight. According to the solubility data of nitrobenzene in water from Smith (6), we can see that the solubility of nitrobenzene in water at room temperature is approximately 2,000 ppm, which is well above the 8 micrograms/liter limit. Therefore the concentration of nitrobenzene, and likely all organics in the wastewater, will need to be reduced to a minimum of low ppm levels.

We are yet to explore any requirements to reduce the BOD of the wastewater. According to the background provided above, the wastewater would typically need to meet a BOD limit of 10-45 mg/L. But what is the BOD of our stream? Let us use the procedure discussed above to get a rough estimate. We will assume that the water is saturated with nitrobenzene only, approximately 2,000 ppm. Our first step is estimating the ThOD of the wastewater. The following reaction is used to estimate the ThOD,

$C_6H_5(NO_2) + 4.75\ O_2 \Rightarrow 3\ CO_2 + 2.5\ H_2O + NO_3^-$ [17]

If the nitrobenzene concentration in the wastewater is 2,000 ppm, then based on the above reaction equation, the ThOD of the wastewater is approximately 2,500 mg/L:

$$ThOD = \frac{2000E-6\ \frac{kg\ nitrob.}{kg\ of\ water} \times 32\ \frac{kg\ of\ O2}{Kmol\ of\ O2}\ x\ 4.75\ x\ 1E6}{123\ \frac{kg\ of\ nitrob.}{Kmol\ of\ nitrob.}} = 2471\ ppm\ \approx 2471\ \frac{mg}{L}$$

Therefore a conservative estimation of the BOD of the wastewater is approximately 2,000 mg/L (i.e., 80% of the ThOD). Clearly, much BOD reduction is required before the stream can be discharged.

The findings imply that significant process steps to purify the wastewater will be required.

This relatively simple review has provided much information on additional steps that will be required to have a complete process. In summary, our check on emission limits indicate that the process will need the following steps:

- Scrubbing of the process vent
- pH adjustment of the wastewater
- Removal of organics from the wastewater
- Reduction of the BOD of the wastewater

These emission treatment requirements would not be different than the steps required by the incumbent industrial process which produces the same by-products but in larger quantities. Certainly, nothing up to this point showed a development feasibility constraint. Again, at this point we are just trying to add more high level details to our overall process.

[17] *From Smith (8), in these calculations carbon is converted to CO_2, hydrogen to H_2O, nitrogen to NO_3^-, sulfur to SO_4^{2-}*

2.1.6 Evaluation of the Intellectual Property (IP) Landscape

Evaluating the IP landscape of the technology under development is a very important step performed at the idea phase/bench scale phase. In fact, continuously evaluating the IP landscape though the whole development process is important and therefore we will review this issue in some detail through this section.

Technologies, ideas, innovations are all typically protected by some sort of intellectual property strategy, in most cases it involves patents. However, patents are not the only protection strategy. Some technologies or processes are better protected as trade secrets. Other forms of protection, that are not very relevant to chemical or biological processes, are trademarks, copyrights or industrial designs. Moving forward, it is important to understand well the distinction between patents and trade secrets. Therefore, we will discuss them in detail. This is not an exhaustive review, but sufficient information is provided here to make early stage decisions on the type of protection that would best suit a particular process technology.

Before we get into patents and trade secrets, let us discuss the relevance of intellectual property issues in the technology development process. As discussed later, patents provide exclusive rights to the patent holder for the novel ideas covered by the patent claims of that particular patent. Nobody else can commercially use those ideas without permission from the patent holder. As such, an important early task to perform on any technology development project is an exhaustive patent search. The result from the search would provide answers to some key questions:

- Is the process under development novel?
- Would existing patents preclude the commercial use of the process under development?
- What are constraints imposed by those patents on the process technology under development?

It is important to determine early on the development of an innovation that there is a commercial avenue open for the technology. It is also important to start exploring how best to protect an invention. The golden rule, if there is one, is the following:

If the innovator's intention is to license or franchise the technology, then patent protection is the way forward. If the innovator's intention is to directly exploit the invention commercially, then trade secret protection may be the best way forward.

Patents disclose inventions in detail, meaning that the competition is made well aware of the innovation once the patent is published. Unless the patent is "bullet-proof" and most of them are not, companies or competition will first try to find a way around them rather than licensing the patent.

Appendix B of this module provides a description of web-based tools that can be used to perform patent searches and reviews.

Let us now discuss Trade Secrets. For chemical or process inventions, the innovator should consider Trade Secret protection if she is intending to directly exploit the idea commercially, especially if the idea/process can be implemented without involving other third parties. Another case where Trade Secret protection should be considered is when infringement of the process patent would be difficult to prove. If the invention is to be protected as a Trade Secret, then it must be treated as a secret within the organization as well. This means that IP protection steps within the organization, such as the signing of confidentiality agreements by employees, visitors or third-parties to whom the secret needs to be disclosed to, must be implemented. If a breach happens, the innovator will need to prove in court that proper steps were in place to protect the idea before the court prevents the breaching party from further disclosing or using the idea.

In general, processes lend themselves well to Trade Secrets because typically they cannot be reverse engineered. The competition can attempt to reverse engineer the product coming out of the process, but not the secret process itself. Maintaining a Trade Secret requires discipline, structure and documentation, and it is not necessarily a cheaper alternative to patents. However, they can be a stronger form of protection if well implemented (i.e., think of the Coca-Cola recipe which has remained a Trade Secret for over 130 years). As any other form of protection, there are some drawbacks to Trade Secrets:

- If the trade secret is revealed, others can use it, and the only compensation may just be in the form of damages from whoever broke their duty of secrecy

- If someone else independently discovers the same invention, and proceeds with a patent, she may be able to shut you down[18].

Providing that the innovator has a good head start, trade secrets are sometimes followed by publications of the invention in the open literature or conferences (i.e., the trade secret is purposely given away). This is sometimes done to ensure that others cannot pursue patents that could block, for example, the operation of a production facility or the commercial implementation of an idea. For non-core areas of a process, this is a typical path forward by some large chemical producers. In Canada, filling a provisional Canadian patent (i.e., just applying for a patent and not necessarily completing the expensive patenting process) is a very good and cost effective approach to make an innovation public. Once an innovation is public knowledge, it cannot be patented by anyone else.

Let us now move into using patents to protect IP. Patents provide strong IP protection to novel ideas as long as the patent document is solid in content. However, not all novel ideas are patentable. For an innovation to be patentable three criteria must be met:

- The innovation is novel (i.e., nobody thought of it before)
- The innovation is useful (i.e., it provides a tangible benefit)
- The innovation is inventive (i.e., the innovation was developed through some creative process)

[The last criterion is fairly subjective, and it can lead to lengthy disagreements between a patent applicant and a patent examiner.]

Let us briefly review patents from both sides:

- An innovator that is trying to understand her freedom to work
- An innovator that is trying to protect her IP

[18] In the case of processes, patent law states that Prior Use rights generally allow someone who can demonstrate commercial utilisation of a process to continue to use that process despite a new patent covering it. You are limited to the capacity and form of prior use. So, you can't expand or modify your process.

Freedom to Work

Through a patent search, the innovator will learn if her innovation is novel or whether there are constraints set up by other inventors.

A patent document typically contains three parts: background, specification, and claims. The background provides a summary or context on the state of the art on the technical area pertinent to the innovation (i.e., what technologies currently exist). The specification explains in detail the invention covered by the patent (i.e., it provides all key data and technical background). The claims provide a summary of what is protected by the patent (i.e., what exactly about the invention is legally protected). When reviewing patents, it is the claims and specifications sections that are of most interest. The claims define whether the innovator's idea is already owned by someone else and/or the constraints that limit the extent of someone else's freedom to practice. The specification section provides a lot of good information and data that may be useful to expand the on-going development work. Innovators (companies) tend to carefully study other people's specifications and claims to find holes that can be exploited.

IP Protection

When an innovator is looking for patent protection, it is very important to work carefully and thoroughly through the patent application. The specification must be as complete as possible and the claims as broad as possible to minimize the possibility of others finding ways around it. What is important to understand is that claims must be well supported by the specification to be allowed by the patent examiner (i.e., the technical data and technical background in the specification must cover all areas of the claim). It is also important to understand that claims can be changed through the defense process of the patent as long as the specification provides the base for the desired change; therefore it is important to put much thought in writing the specification part of the patent. Obtaining a successful patent leads through the following typical stages:

- Patent application
- Patent examination
- Patent defense (if required)
- Patent granting

After a patent application, a patent examination must be requested (i.e., this does not automatically happens). A patent examiner will review the patent and take one of three actions:

- Decline the application
- Challenge the application
- Grant the patent

In the US or the European community, the patent examiner most typically will challenge an application on the first pass. The challenge will be done on the basis that the patent does not meet one or more of the three required criteria (i.e., novelty, inventiveness, utility). A challenge on novelty is done on the basis of prior art (data or information from an older patent, open literature, websites, etc.) that the examiner has found, on her opinion, to contradict the novelty of the invention covered by the patent application. Less often, the examiner will challenge the inventiveness of the invention, which again is a very subjective area. It is the applicant's job to prove to the examiner that the raised challenges are not valid. Do not get discouraged! In most cases an application will be challenged, but in most cases the patent will be eventually granted provided that each of the examiner's objections are carefully addressed. Often times, this leads to reworking the claims' language.

Writing a patent properly requires much experience, and defending a patent properly requires a good understanding of the system. As a result, engaging patent lawyers through the process is typically done and well worth the investment.

Here are some other useful information about patents:

- Patents are valid for 20 years from its filing (i.e., date the patent application is submitted) or 17 years from its granting, whichever is longer.
- A patent application typically becomes public (i.e., it is published by the patent office) approximately 18 months after the application is filed (i.e., everyone can now see your application, but the patent has not been granted yet).
- It is not rare for a patent in the US and the European community to take 3 to 5 years to be granted. In other jurisdictions, it is much faster.

- Patents are granted on the basis of "first-to-file", which means that a patent is granted (provided that it meets all three criteria discussed above) to whoever files an application first, not necessarily to who the creator of the invention is or who was first to invent.
- In the European community, and only in the European community, a patent application is open to anyone to challenge, but only within a window of six month from the patent application becoming public. The patent will not be granted until that window of six months closes.
- In most jurisdictions, with the exception of the European community, a granted patent can only be challenged in court.

An important consideration is to define what regions of the world should an innovator aim for patent protection. The patent process is expensive and adding different regions can escalate costs rapidly. But in regions not covered by patents anyone can use the invention freely. The following link from the US patent office provides the fees associated with the US patent process, https://www.uspto.gov/sites/default/files/documents/USPTO%20fee%20schedule_current.pdf. These fees do not include lawyer costs. It is not uncommon for the costs associated with a US patent to be in the range of $30,000 to $50,000, when including lawyers' fee. Adding the European community and a few other key regions, can typically bring that total to over $150,000. In addition, there are maintenance fees that must be paid periodically to maintain a patent valid in the different regions. They can easily add to approximately $1,000 per region per year.

If the objective is to obtain patent protection in several regions, then a Patent Cooperative Treaty (PCT) application should be considered. This is a patent treaty signed by close to 200 countries. The PCT office does not grant patents, but the PCT is a central processing system that the applicant can use during the interim stage of the patent application process. Generating a patent application through the PCT office provides a priority date for that invention in close to 200 countries (i.e., remember "first-to-file"). Once the application is in, the applicant now has 30 months to file patent applications in the desired regions, provided that they are part of those countries covered by the PCT. One more twist to keep in mind is that after applying for a US patent, the applicant still has 12 months from that application date to also submit a PCT patent application if so desired.

One last word on patents is around Provisional Patents. They are patent applications used as place-holders for setting a priority date (i.e., first-to-file). They provide the applicant up to 12 months to file a proper complete patent application. In general, the claims of a provisional patent

can be changed as it moves into a proper application, but that can only happen as long as the specification content allows it (i.e., if the specification part of the provisional patent must be significantly updated for any reason, then the provisional patent becomes obsolete). The PCT offices accepts provisional patents.

Let us now go back to our development example project and explore how the inventor approached his IP review and protection strategy. After a careful patent search, the inventor identified a total of seven patents that directly applied to his improved process (i.e., all these patents are listed as prior art in the inventor's nitration patent). These patents are:

- US 2,256,999 (Castner)
- US 3,928,475 (Dassel)
- US 3,981,935 (McCall)
- US 4,021,498 (Alexanderson)
- US 4,091,042 (Alexanderson)
- US 4,331,819 (McCall)
- US 4,772,757 (Lailach)

Reviewing the claims from these patents, the following constraints were identified:

US 2,256,999 – This patent covers all reactions of an aromatic organic with nitric acid under the presence of sulfuric acid <u>but</u> where the heat of the reaction (i.e., this is a very exothermic reaction) is used in a subsequent step to concentrate the sulfuric acid that is diluted in the reaction by the by-product water produced.

US 3,928,475 – This patent covers the reaction of benzene and nitric acid under the presence of sulfuric acid <u>but</u> where the reactants are introduced into a reactor that already contains nitrobenzene (i.e., a CSTR reactor) and the reactor is at temperatures of 120-160 ºC and the by-product water is flushed directly from the CSTR using the heat of the reaction, thereby maintaining the sulfuric acid concentration steady.

US 3,981,935 – This patent covers similar claims as US 3,928,475 <u>but</u> where the reaction takes place in two CSTR in series.

US 4,021,498 – This patent cover all mono-reactions of an aromatic compound with nitric acid under the presence of sulfuric acid but where the process reaction conditions are limited to using sulfuric acid in the concentration of 60-70 wt%, the initial nitric acid concentration in the sulfuric acid is 5 wt% to 8.5 wt%, the reaction temperature does not exceed 145 ºC and reaction residence time is 0.5 to 7.5 minutes.

US 4,091,042 – This patent cover the reaction of benzene with nitric acid under the presence of sulfuric acid but where the process reactions conditions are limited to using sulfuric acid in the concentration of 58.5 wt% to 66.5 wt%, the initial nitric acid concentration in the sulfuric acid is 3 wt% to 7.5 wt%, the reaction temperature does not exceed 145 ºC and the reaction does not produce more than 500 ppm of dinitrobenzene.

US 4,331,819 - This patent covers all reactions of an aromatic organic with nitric acid under the presence of sulfuric acid but where sulfuric acid is limited to a concentration of 60-70 wt% and an inert gas is introduced in the reactor to aid in the removal of the by-product water produced.

US 4,772,757 – This patent covers the reaction of benzene with nitric acid under the presence of sulfuric acid but under isothermal conditions, rather than adiabatic, and where the sulfuric acid is then re-concentrated in a plurality of flash vessels.

At the time, the IP landscape was well populated with a good number of patents setting boundaries and constraints that the inventor needed to navigate through if he wanted to succeed in commercializing his process technology. The inventor found a set of reaction conditions for the production of nitrobenzene that he thought were novel and commercially attractive. With that in mind, let us summarize how the prior art (i.e., above described patents) affected the inventor's goal. The overall process restrictions and boundaries set by the IP landscape, when combining the different patents, can be defined as following (i.e., areas where the inventor could not commercially operate):

- Any nitration reaction of an aromatic organic with nitric acid under the presence of sulfuric acid where the heat of reaction is used, on a second step, to re-concentrate the sulfuric acid diluted by the by-product water produced in the reaction.
- Reaction conditions in the production of nitrobenzene where the catalyst sulfuric acid concentration is between 58.5 wt% and 70 wt%, the nitric acid concentration in the sulfuric

acid at the beginning of the reaction is between 3 wt% and 8.5 wt%, and the reaction temperature is below 145 ºC.

The inventor's preferred reaction conditions summarized in Table 2.1 show a sulfuric acid concentration of 69.5 wt% and a nitric acid concentration in the sulfuric acid of 2.8 wt%. The reaction temperature is not mentioned. It is the nitric acid concentration in the sulfuric acid, which is below 3 wt% (i.e., existing patents covered concentrations above 3 wt%), that put the inventor in the clear. And it was the inventor's argument, as stated in his patent disclosure, that it is this lower nitric acid concentration that leads to the process improvements of his invention. The inventor found a commercially viable set of reaction conditions, and therefore no development feasibility constraints were present from the IP landscape point of view. The question to answer now was whether or not to proceed with a patent application for these novel process conditions found by the inventor. Given that the inventor's objective was to license the technology, patent application protection was the obvious eventual path forward.

Generally, proceeding with patent protection at this early point of the process development exercise is typically premature. However for process innovations that are disruptive rather than incremental in nature, a patent application at this stage is not uncommon (for our nitrobenzene example and as discussed in Module 6, the innovation is incremental in nature). Yet one must be careful in deciding when to proceed with a patent. There is typically much yet to learn about the process being developed as it moves through the development phases, and a premature poorly set patent application can really hurt the commercial aspirations of a technology. In fact, an early published patent application by an innovator on a specific process, can be used by patent examiners as prior art to challenge the novelty of an updated patent by the same innovator for the same specific process.

2.2 Summarizing the Work and Assessment Findings Through Idea Phase/Bench Scale Phases

As previously discussed, at the idea/bench scale stage of a project, mainly high level assessment work takes place (i.e., some initial de-risking work). We are trying to decide if moving the technology through the development phase is warranted. Three key criteria are reviewed around the process innovation: economic potential, development feasibility, and safety-health-environmental issues. The objective is to broadly assess if the technology has commercialization potential by evaluating what is known and published at the time. As discussed through this

module, it involves technical and high level economic evaluations, and the typical activities completed at this stage of the project involves:

- Development of a Block Flow Diagram (BFD) for the process idea
- Evaluation of reference cases (i.e., competitive industrial processes)
- High level economic evaluation for the developed BFD
- Review of industrial process product specifications
- High level Safety Health and Environmental review of the process
- Evaluation of the intellectual property (IP) position and landscape

Let us go back to our development example project to show how the initial idea phase completed evaluation work shapes the early stages of the commercial path of a process technology.

The BFD mass balance analysis of the novel process against the incumbent industrial process summarizes the feed and emission improvements attainable by the technology, which are:

- 0.15% reduction on benzene consumption
- 0.55% reduction on nitric acid consumption
- 61% reduction on by-product formation
- 0.50% reduction on generated wastewater
- 58% reduction on nitrogen oxide by-product formation

A simple operating cost analysis of the reactor performance (i.e., comparing savings in reactants use) showed an improved profit margin of 0.29%. Further operating cost savings were identified as likely possible when considering the treatment of the reduced production of by-products from the reaction.

A review of the typical process industrial specifications for the product nitrobenzene indicates that the overall process, beyond the reaction step, will need steps for removing the nitrophenols and

some of the dissolved water from the product nitrobenzene. Since the inventor's process seems to produces 62% less nitrophenols than the incumbent technology, it would be fair to expect that the capital and operating cost of the process steps to deal with removal of the nitrophenols would be significantly decreased when using the inventor's process conditions. We do not yet know what those savings are.

A review of typical emissions limits in the Vancouver region, both for wastewater and flue gas, provided a high level understanding of further process steps that may be required to treat the by-products of the process. At this stage and based on the current analysis, we understand that the following additional process steps would be required:

- Scrubbing of the process vent
- pH adjustment of the wastewater
- Removal of organics from the wastewater
- Reduction of the BOD of the wastewater

Since the inventor's process produces 58% less nitrogen oxide and 0.50% less wastewater, it would be expected that the capital and operating cost of the process steps to deal with process emissions would be lower than those produced by the incumbent technology. We do not yet know what those savings are.

Finally, a review of the IP landscape indicated that the inventor had a commercially viable set of reaction conditions (i.e., there were no patents blocking his innovation).

The review did not identify any development feasibility constraints up to this point.

To summarize, a broad review of the technology was completed using published information. The results from the review indicated that we are looking at an incremental technology. The inventor's process improvements led to some benefits over the incumbent technology but they were certainly not stellar. Whether this process warranted moving up the development path was likely a marginal decision at first sight, but as we will review in the next module, a broader understanding of the market made moving this technology to the next level of development a sensible decision.

At the end of this review phase, most process technologies would be at a Technology Readiness Level (TRL) of approximately 2.

One concluding remark is the importance of documenting work and findings. Through every stage of development a detailed report must be prepared and circulated to stakeholders. A report from the assessment work completed through the idea phase should include most of the following sections:

- A rudimentary description of the process concept
- A summary of the reference case (incumbent commercial industrial processes for the same product)
- Proof of principle experimental evidence
- Economic evaluation
- Findings from the safety-health-environmental assessment
- Findings from the IP landscape review
- Summary of identified challenges
- Proposal for the next phase of development or identified further research

References

1- Hockman K. K., Berengut D., (1995), Design of Experiments, *Chemical Engineering*, *November, 142-147*.

2- Murphy D. T., (1977), Design and Analysis of Industrial Experiments, *Chemical Engineering*, *June, 168-182.*

3- Harmsen J. (2019), *Industrial Process Scale-up: A Practical Innovation Guide from Idea to Commercial Implementation*, Second Ed., Elsevier B.V.

4- Knauf T., Von Gehlen F., Schmiedler J., Pilarczyk K., Drinda P., (2008), *Process for the Production of Nitrobenzene*, US 7,326,816

5- Guenkel A. et al., (1994), *Nitration Process*, US 5,313,009

6- Smith J. C., Foecking N. J., Barber W. P., (1949),, Solubility Data for Aniline-Nitrobenzene-Water System, *Industrial And Engineering Chemistry*, *41, 2289-2291*

7- Eckenfelder W. W., Musterman J. L., (1995), *Activated Sludge Treatment of Industrial Wastewater*, Technomic Publishing.

8- Smith R., (2017). *Chemical Process: Design and Integration*. Second Ed., Wiley

9- Seider, D.W., et al., (2017). *Product And Process Design Principles: Synthesis, Analysis, and Evaluation,* Fourth Ed., Wiley.

Appendix A – Typical Considerations when Analyzing Development Feasibility Issues

Refer to Table 2.2., in Harmsen J. 2019. Industrial Process Scale-up: A Practical Innovation Guide from Idea to Commercial Implementation, Second Ed., Elsevier B.V.

Appendix B - Patent Search Tools

Most countries have their own patent offices. In the case of the European community, they have a central patent office that covers countries within the community. Each patent office typically has a web based search tool for the patents granted by that country or region. Some of key regional patent offices are:

- United States Patent and Trademark Office (USPTO)
- European Patent Office (EPO)
- China's National Intellectual Property Administration (CNIPA)
- Japan Patent Office (JPO)
- Korean Intellectual Property Office (KIPO)
- Deutsches Patent- und Markenamt (DPMA)
- Canadian Intellectual Property Office (CIPO)
- World Intellectual Property Organization (WIPO)

A visit to the website of these organizations will lead the user to their search tool. These tools tend to be very basic and make for poor searchers unless the user knows exactly what she is looking for or is proficient on patent searchers. They also are limited to patent information for patents granted in their own regions. So multiple searches would be required to cover multiple geographical regions. Fortunately, there are other search tools that cover multiple jurisdiction. Some free patent search engines that cover multiple jurisdictions are:

- Google Patents

Launched in 2006, Google Patents provides an easy to use patent search tool. It is similar to a Google web search, entering key words for a search provides patents that may be applicable to the key words. Entering precise information, such as a patent number, provides precise output. Google Patents allows you to search patents on the basis of the following variables: search terms, date, assignee, and Inventor. Google patents can also translate the patent's language to other languages. As of 2017, Google Patents indexed over 87 million patents for 17 of the largest patent offices around the world. It is a good tool to complete general patent searches.

- Espacenet

Espacenet covers patents from 97 countries with a database of more than 110 million patents. It covers translations between English and 31 other languages. Options for searchers on Espacenet include: smart search (up to 20 search terms can be entered), advanced search (in-depth searches with some of the following categories can be set up: title, abstract, publication number, application, applicant, and inventor.), and classification search **(**allows patent searches on the basis of CPC (Cooperative Patent Classification)). Espacenet also gives the option to download the original patent in the form of a PDF.

- Patentscope by WIPO

Patentscope by WIPO is a powerful patent search engine providing free access to over 65 million patents from multiple participating patent offices. This search engine can be used in 9 different languages.

Powerful patent search engines are also offered by different companies on a paid basis. Some of these tools include: SciFinder, Derwent World Patent Index, and PatBase.

Module 3

Development of Techno-Economic Assessments for Chemical and Biological Process Development Project – The Engineer's Perspective –

[The *TEA Phase* of a development, scale-up and commercialization project]

Module 3 – Introduction to the Techno-economic Analysis Phase

As reviewed in Module 2, at the idea/bench scale phase of the scale-up and commercialization pathway of a chemical or biological process, mainly high level assessment work takes place based on available literature and laboratory gathered data. Three key criteria are reviewed around the process innovation: economic potential, development feasibility, and safety-health-environmental impact. The objective is to broadly assess if the technology has commercialization potential. Assuming the process innovation under consideration has received a passing mark through the idea / bench scale phase, it now moves into the Techno-Economic Analysis (TEA) phase of the development and commercialization process, which is the focus of this module.

Required Knowledge:
This module pre-requisite is that the reader be already familiar with:

- Developing process flow diagrams
- Developing mass and energy balance models
- Designing unit operations
- Designing reactors

The TEA is a methodology framework used to analyze in detail the technical and economic merits of a process. It typically combines process modeling, engineering design, and economic analysis techniques. Through the TEA phase, the process innovation is still reviewed using available literature and laboratory gathered data, but now the technology is assessed as a complete process. We are considerably expanding the boundaries of the review to broadly understand the impacts and benefits. As an example, the evaluation of a novel reaction may now include the review of the downstream product purification step to fully understand the technical and economic impact of the new reaction conditions on the overall process. The technology assessment also goes deeper into details. We stop looking at the technology as a group of process blocks, as was the case in the Block Flow Diagrams (BFD) used through the Idea phase. We now dive into those blocks to define all the unit operations involved in the process, transforming the BFD into a Process Flow Diagram (PFD) or flowsheet.

As we will discuss, the TEA does much more than just providing techno-economic results. It also summarizes the technical findings required to start developing a well-structured and defendable

technology development program. It is through this phase that the framework for the development work ahead is established.

Typically at this phase of the development and commercialization process, a market study is also initiated. The market analysis forms part of the business plan. A discussion on market studies and business plans is outside of the scope of the material covered by this module. However, the development of both of these documents is an integral part of the commercialization process. The market analysis includes information about the industry, the target market, the competition, and the penetration strategy for the product.

In addition to a description of the management team and company, the business plan includes information on:

- Market analysis
- Competitive analysis
- Product description
- Marketing plan
- Sales plan
- Funding strategy
- Financial projections

Moving forward we are going to assume that the market analysis and the business plan have not identified any significant business barriers for the technology, so we will proceed to scale and technically de-risk the process technology.

Through the TEA phase, the technical and economic assessment of the technology is completed by performing the following work:

- Developing an expanded flowsheet for the process technology
- Preparing a detailed mass and energy balance for the developed flowsheet
- Estimating the operating expenses (OPEX) and capital expenses (CAPEX) associated with the process
- Completing an economic analysis of the process

- Identifying and summarizing process risks that must be addressed

Figure 3.1 shows where the TEA phase stands within the typical scale-up and commercialization pathway. The Technology De-Risking step, which closely follows the TEA, is also discussed in this module.

One last important comment in this introduction is that both the TEA and business plan are living documents that are constantly being updated as the project moves up the Technology Readiness Levels (TRLs) – i.e., as it moves through the pathway of Figure 3.1. This means that as the project moves into the pilot phase and later into the demonstration phase, the gathered data from those phases are used to update the TEA and the business plan, allowing us to more accurately assess the commercial viability of the process as the development work progresses.

It is the development of a complete process around the innovation idea that is central to this phase of the project. However, before diving into the process synthesis, we will briefly review two key areas of process design:

- Life Cycle Analysis (LCA)
- Green Chemistry Principles (GCP)

A good understanding of LCA and GCP should help us with the development of efficient and sustainable processes. Today, sustainability and environmental impact assessments form part of almost all industrial development projects. So let us start this module by examining LCA and GCP before we dive into the TEA.

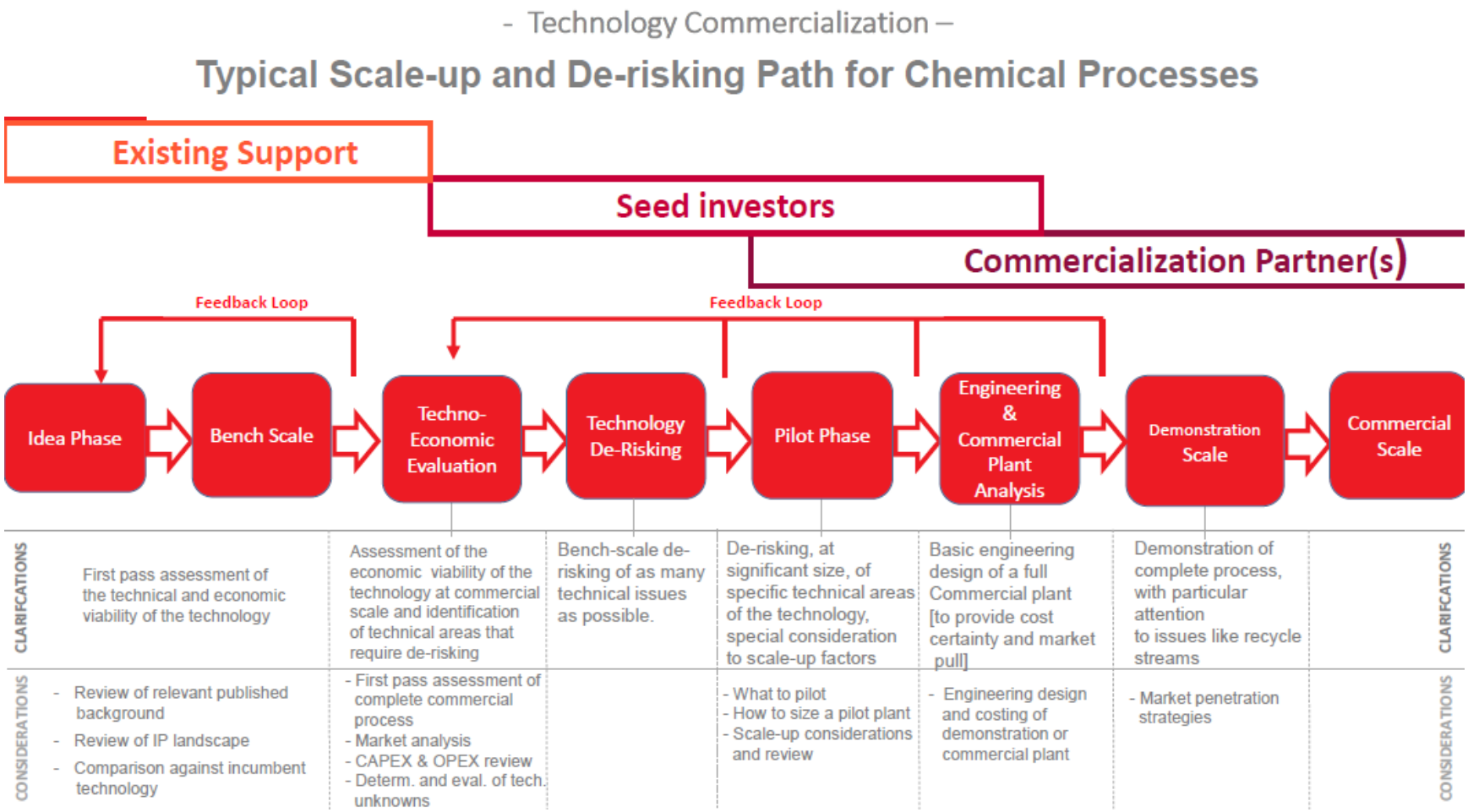

Figure 3.1 – Typical Process Development and Commercialization Path for Process Technologies

3.1 Life Cycle Analysis (LCA) in the Context of a Techno-economic Analysis

In regards to chemical and biological processes, LCA is a scientific methodology used to assess the environmental impact, and sometimes social impact, that a process will have throughout its entire life cycle. Although a very useful exercise, it can be argued whether or not it is required or useful at this early stage of the development analysis, where the commercial viability of the process is yet to be determined. Clearly, the need and timing for the development of an LCA is project specific. However, the reality is that chemical and manufacturing based companies are now more often demanding that LCA reviews get started this early in the process development plans. The reasons vary from company to company but the underlying motive is the need to assess potential future liabilities before much development investment is allocated to a new technology. However, given the costly and lengthy nature of LCAs, they are usually first kept at a high level until certainty on the commercial viability of the process technology is more assured. Table 3.1 presents a selected list of large chemical companies that have developed their own tools to perform LCAs of their projects, including process development projects. The list is based on a subset from a larger list presented by Maranghi (1).

Table 3.1 – List of LCA Tools Developed by Selected Chemical Companies

Company	Developed Tool	Function
Bayer AG	Interactive LCA Calculator Tool	Evaluates the differences in environmental impact comparing different alternatives
Solvay	Sustainable Portfolio Management (SPM) tool	Evaluates the environmental and economic impact of the project
GlaxoSmithKline	FLASC	Predicts potential cradle-to-gate impacts of new chemical routes
L'Oreal	Eco-footpring Tool	LCA outputs with green metrics

LCA methodologies have evolved much from their beginnings in the early 1990s, and they are still evolving. However, today we have standards that greatly help their development and interpretation. These standards are provided by the International Organization for

Standardization (ISO), more specifically ISO 14040 and 14044. According to these standards, there are four main parts to an LCA:

- Definition of goal and scope
- Inventory analysis
- Impact assessment
- Results' interpretation

Let us now discuss these parts in more detail.

3.1.1 LCA Part 1 - Definition of Goal and Scope

Through the goal and scope definition of an LCA, the main objectives are to:

- Define the process being reviewed
- State the objectives of the LCA
- Describe the system boundaries (i.e., what is part of the review and what is not)

The objectives of an LCA are typically oriented towards assessing the sustainability of the process, that is its environmental impact in whatever form it can take. Those forms are typically grouped in a number of quantifiable areas. These areas are:

- Climate change
- Ozone depletion
- Photochemical smog formation
- Acidification
- Eutrophication
- Resources consumption
- Toxicity

Following the standards, the environmental impact of a process on each of the above areas can be quantified, usually by estimating a factor that can then be compared to the factor of similar processes.

Through the goal and scope definition phase, we need to define how many of the above areas are relevant to our process. Let us now describes these areas in some detail.

Climate Change –
The climate change factor is expressed as the Global Warming Potential (GWP). This is a rough estimate of the green-house emissions from the process. The calculation of GWP depends upon the algorithm used for its estimation, and there is no standard for it. However, most LCA models use the algorithm developed by the IPCC (Intergovernmental Panel on Climate Change). The units for the GWP factor are kg of CO_2 equivalent. This factor takes into account all energy and materials used and/or discharged from the process, and converts them into a total CO_2 emission equivalent.

Ozone Depletion -
This factor looks at the potential of the process for affecting the earth's ozone protective layer. The definition of ozone depletion potential of different gases developed by the World Meteorological Organization, and defined as kg of CFC-11 equivalent per kg of emissions, is how this factor is typically estimated.

Photochemical Smog Formation –
Photochemical smog, mainly ozone formation at ground level, is harmful to human health and ecosystems. This factor quantifies the potential photochemical smog formation due to the process emissions, and expresses it as kg of ethylene equivalent per kg of emissions. Some LCA models use the UNECE Trajectory model to estimate this factor (Maranghi (1)).

Acidification –
The acidification factor quantifies the acidification potential of the process – i.e., how the process can lead to the acidification of soil, groundwater, surface water and ecosystems. The acidification factor is expressed as kg of SO_2 equivalent per kg of emissions. Some LCA models use the RAINS 10 model to estimate this factor (Maranghi (1)).

Eutrophication –

Eutrophication is an enrichment of salt in water or soil. Its estimate is based on stoichiometric procedures. It is expressed in the Nutrification Potential (NP) and it is expressed as kg of PO_4 equivalent per kg of emissions.

Resource Consumption –

The Resource Consumption relates to the consumption of minerals and fossil fuels (i.e., non-renewable resources). The Abiotic Depletion Factor (ADF) considers concentration reserves and rate of reserve loss for each extraction of minerals and fossil fuel. The ADF factor is expressed as kg of antimony equivalent per kg of extraction for minerals, and mega joules (MJ) of energy per kg of extraction for fossil fuel.

Toxicity –

This factor refers to the environmental toxicity created by the process emissions. Its estimate is based on the USEtox model, which is a scientific model developed for the characterization of the human and ecotoxicological impacts of chemicals. The model provides characterization factors for three toxic impact categories: human cancer toxicity, human non-cancer toxicity, and fresh-water aquatic ecotoxicity.

Once the impact factor list for the process has been developed (i.e., typically a subset of the above discussed factors), the boundaries for the analysis are defined. The typical boundaries for an LCA are one of:

- Cradle-to-Grave
- Cradle-to-Gate
- Gate-to-Gate
- Gate-to-Grave

Cradle-to-grave boundaries look at a process from the extraction of raw materials from nature to the end of life of the product or chemical.

Cradle-to-gate boundaries look at a process from the extraction of raw materials from nature to the emissions and product leaving the plant during chemical production.

Gate-to-gate boundaries look at a process within the constraints of a chemical plant or manufacturing facility.

Gate-to-grave boundaries look at a process including the chemical plant or manufacturing facility down to the end of life of the product or chemical.

The selection of the boundaries is project specific. For example, a factory that fills recycled jugs of water with filtered water (e.g, Canadian Springs) may only consider gate-to-grave boundaries since the raw feed material for the facility is just water, but of course, that depends on the objectives of the study. On the other hand, a gate-to-gate analysis may be preferable for the purpose of comparing two similar processes making the same product with similar inputs and outputs.

3.1.2 Inventory Analysis

Once the goal and scope part of an LCA is completed, we move into the Inventory Analysis part of the analysis.

In an LCA, inventory analysis is referred to as Life Cycle Inventory (LCI). The LCI involves the quantification of mass and energy inputs and outputs for a given process throughout its life cycle. ISO 14040 and 14044 define the standards used through this analysis, and Figure 3.2 summarizes the typical inputs and outputs considered through an LCI. The quantified inputs and outputs become the input to the LCA impact model, which is the next part of an LCA as discussed in the next section. The accuracy of the LCA analysis is very dependent upon the thoroughness of the performed LCI.

From the feed side, the LCI would typically include all materials and energy entering the process. The energy components can be electricity, steam, or fuel. Infrastructure may also be included because there is much material and energy encapsulated in it that may need to be accounted for. From the discharge side, the LCI would typically include all the materials and energy leaving the process. The materials leaving the process can be in the form of product or emissions. Energy must be included because some processes are net positive emitters of energy, an example is some pulp mills.

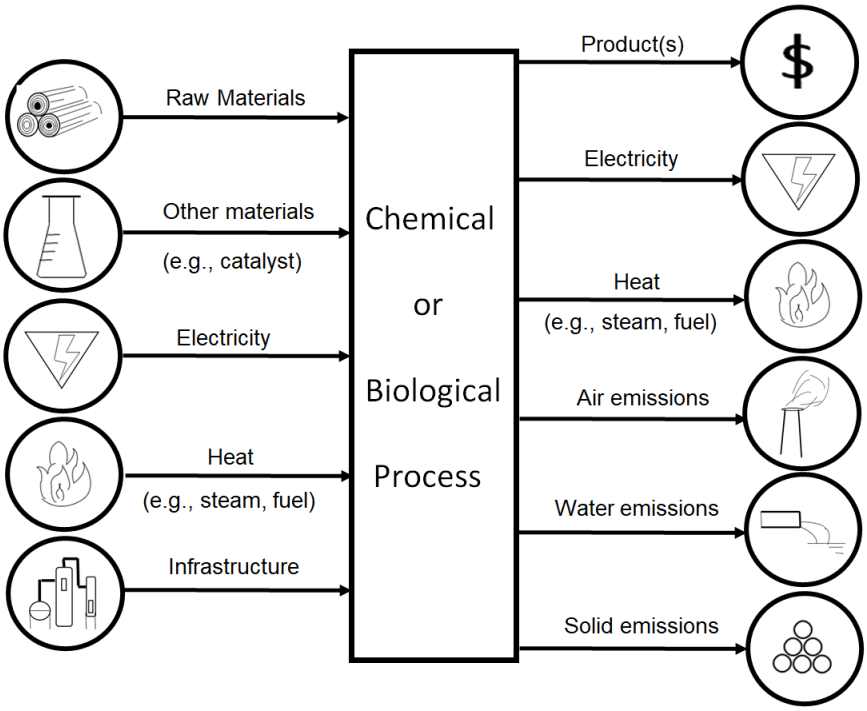

Figure 3.2 – Typical Inventory Streams Associated with a Chemical or Biological Process

As discussed by Maranghi (1), the LCI analysis can be completed on a top-down approach or bottoms-up approach. In the top-down approach, as discussed by Morighuchi (2), macroeconomic models are combined with sector-level environmental data to estimate total supply-chain impacts by the process. This approach leads to a relatively fast LCI analysis but its accuracy is not great. In a bottoms-up approach, which is more relevant to specific chemical and biological processes, detailed mass and energy balances of the process are used to complete the LCI analysis. This approach is lengthier, costlier and more complex, but more accurate. It is specifically a lot more complex if the analysis goes beyond a gate-gate review, where other processes many need to be considered within the boundary of the analysis. Fortunately, there are commercial and open-source databases providing LCI output sheets for many different processes and auxiliary processes such as power plants or incinerators, which make expanding the analysis beyond a gate-to-gate review somewhat simpler. Ecoinvent and GaBi are examples of relevant commercial databases. The Canadian Raw Materials Database (CRMD) is an example of an open-source database. In appendix A, a sample LCI dataset sheet extracted from the CRMD for the Polyethylene terephthalate (PET) process is attached to show the typical information available on these sheets. It is the data summarized in this data sheet that is used as input into the LCA impact model or Life Cycle Impact Analysis (LCIA).

3.1.3 Impact Assessment

The LCIA is the part of the LCA quantifying the environmental impact of the process. The LIC output data is translated into impact categories. These impact categories (i.e., impact factors) were discussed in section 3.1.1 (i.e., climate change, ozone depletion, etc.). At the beginning of an LCIA, we classify the environmental impacts, evaluate them by what is most important to our project or company, and translate them into environmental themes such as global warming or human health. The LCIA is typically completed using software that uses some of the algorithms and models discussed in section 3.1.1 to estimate the impact factors of the process. Unfortunately, there are many software packages available using different algorithms; and the choice of suitable impact assessment tools for a reliable LCA is one of the main issues facing LCA analysts today.

Arguably, the most widely used commercial software to complete LCIA is SimaPro, which was first developed in the early 1990's, and contains a substantial database of LCI data sheets for a wide range of processes. An open source alternative is openLCA. Figure 3.3 shows the typical output from an LCIA using openLCA.

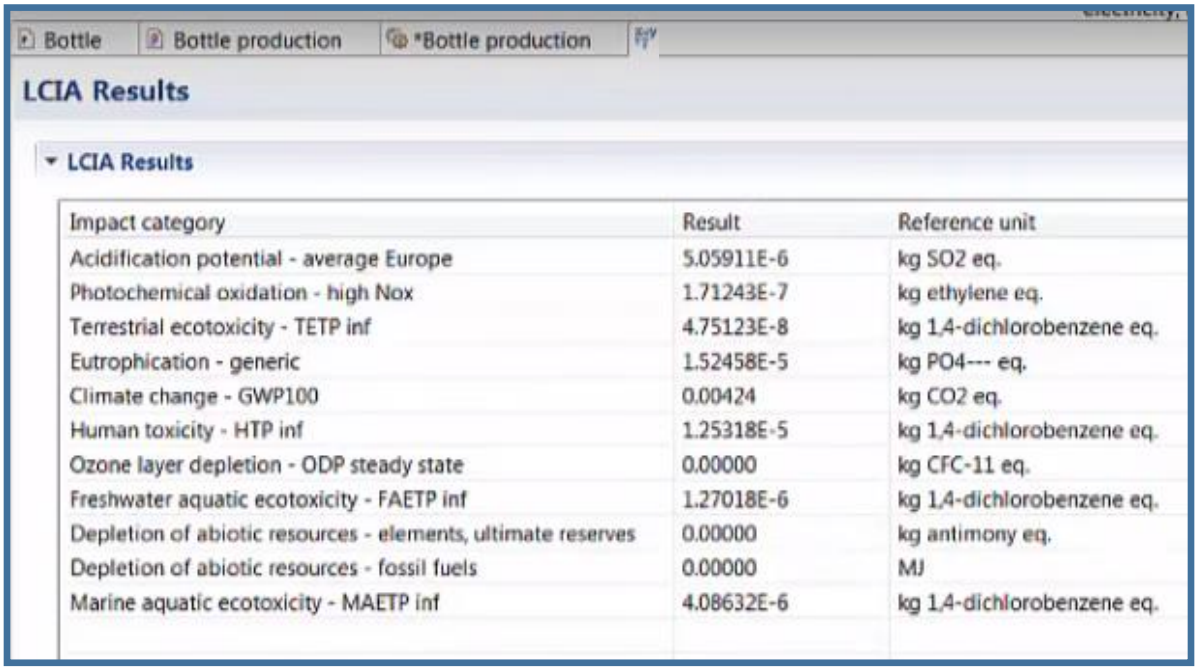

Impact category	Result	Reference unit
Acidification potential - average Europe	5.05911E-6	kg SO2 eq.
Photochemical oxidation - high Nox	1.71243E-7	kg ethylene eq.
Terrestrial ecotoxicity - TETP inf	4.75123E-8	kg 1,4-dichlorobenzene eq.
Eutrophication - generic	1.52458E-5	kg PO4--- eq.
Climate change - GWP100	0.00424	kg CO2 eq.
Human toxicity - HTP inf	1.25318E-5	kg 1,4-dichlorobenzene eq.
Ozone layer depletion - ODP steady state	0.00000	kg CFC-11 eq.
Freshwater aquatic ecotoxicity - FAETP inf	1.27018E-6	kg 1,4-dichlorobenzene eq.
Depletion of abiotic resources - elements, ultimate reserves	0.00000	kg antimony eq.
Depletion of abiotic resources - fossil fuels	0.00000	MJ
Marine aquatic ecotoxicity - MAETP inf	4.08632E-6	kg 1,4-dichlorobenzene eq.

Figure 3.3 – Typical LCIA Output from OpenLCA

3.1.4 Results' Interpretation

Through the results' interpretation part of an LCA, we must ask ourselves if the results make sense and check that the conclusions are well validated.

As shown in Figure 3.3., a typical LCIA software will output a number of environmental factors, but what do they mean and are those numbers a concern? The significance of the factors was discussed in Section 3.1.1. However, the numerical value of those factors are meaningless without context. Unfortunately, there is not a lot of guidance on how to interpret these numerical values. It typically requires experience. However, a relative interpretation can be attained by comparing the values against those obtained by the LCIA analysis of similar processes in the industry. Are the environmental factors higher or lower than those of other players in the industry? Unless the LCIA analyst has environmental experience, it is the relative comparison of the factors which is typically of interest.

In regards to the validation of the conclusions, ISO 14044 describes a number of checks to test whether or not the conclusions are adequately supported by the data and by the procedures used.

3.1.5 Final Comments on LCA

Whether or not an LCA review is completed at the early phase of a process development project remains project specific. Regardless on when it is done, the review first needs the development of a complete process and a mass and energy balance, which is the central piece of work of a TEA. As we develop the complete process through a TEA, it remains important to keep in mind the environmental factors that the LCA would consider, and pro-actively adjust the process to minimize these factors whenever possible.

3.2 Green Chemistry Principles in the Context of a Techno-economic Analysis

Green chemistry principles refers to the use and application of twelve specific notions that when applied in the design of processes can reduce or eliminate the generation of detrimental or hazardous substances through the entire life cycle of chemical products. These twelve principles, which are internationally recognized, were developed by Anastas and Warner (3) in 1991. They were created to guide engineers and scientists towards environmental friendly practices and solutions. The twelve principles are shown and described in Figure 3.4. They center on chemical reactions, but most of them apply to any area of chemical or biological processes (e.g., a separation system, solvent extraction system, etc.).

As the process development work moves from the Idea Phase to the Techno-Economic Analysis Phase, these principles become useful and important as we develop an entire process around the innovation idea. Let us now discuss these principles and how they may affect the design of a process. The discussion is centered on the context of our work – i.e., the development of chemical or biological processes.

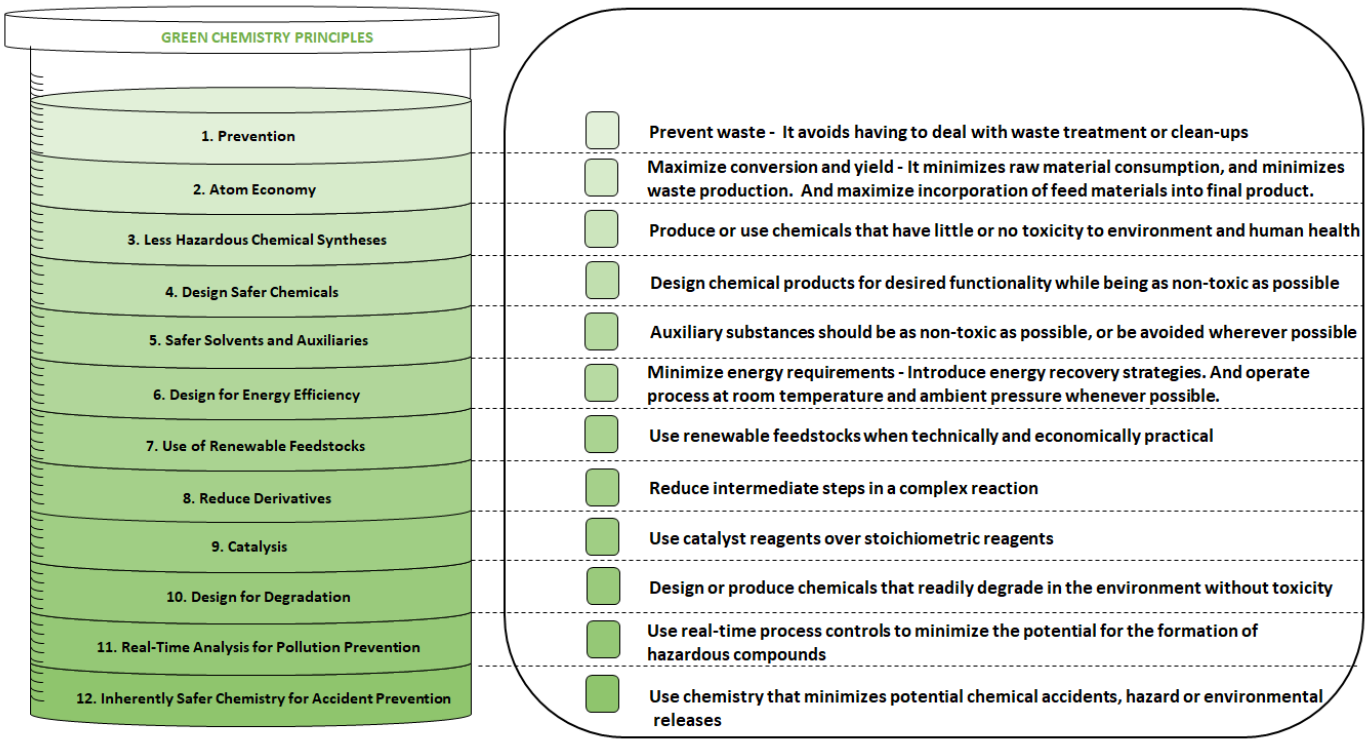

Figure 3.4 – The Twelve Principles of Green Chemistry

Principle No. 1 – Prevention: An important objective through the process design and synthesis of a new process should be to prevent or minimize the generation of waste. This goal could be attained in a number of ways:

- Increasing the reaction yield
- Minimizing the use of solvents
- Intensifying the process (e.g., on a solvent extraction step, operating conditions could be optimized to reduce the amount of solvent used).
- Creating value from waste streams (e.g., find end-users who may take your waste as their feedstock)
- Incorporating the generated waste or by-products into the product (e.g., solid waste from foam production are often introduced as fillers in the final product)

Principle No. 2 – Atom Economy: The design of the process should aim to introduce all feed materials into the final product. This can reduce feed consumption and eliminate waste generation, and could be attained by for example:

- Increasing reaction yield and conversion
- Incorporating the generated waste or by-product into the product

Principle No. 3 – Less Hazardous Chemical Syntheses: the process should be designed to use and produce non-toxic chemicals whenever possible. Often, chemical products can be made through a number of different pathways, each having advantages and challenges, and each having different yields, conversions, and by-product formation. However, the use and production of hazardous materials should stay central in the selection (e.g., in the past, chlorine used to be industrially made by using *mercury* based electrolyzers, which were very efficient but often led to serious environmental mercury releases. These electrolyzers were eventually replaced by the more expensive and slightly less efficient, but more environmentally friendly, diaphragm and membrane electrolyzers).

Principle No. 4 – Design Safer Chemicals: the chemistry of the process should focus on obtaining chemicals with the desired functionality and having little or non-toxicity to the environment or human health (e.g., bleaching agents are used in the generation of pulp for the paper industry to attain the desired whiteness and brightness of the final product; and through the years bleaching agent producers have changed from producing chlorine, a very toxic chemical, to chlorate, a more benign chemical, both with the same desired bleaching functionality in the production of paper).

Principle No. 5 – Safer Solvents and Auxiliaries: Auxiliary substances (e.g., extraction solvents, catalysts, etc.) used in the process should be as non-toxic as possible or be avoided wherever possible (e.g., in the extraction of bitumen from the oil sands, many efficient organic solvents have been proposed, but still today mainly warm water is used for this extraction because of the lower environmental impact, despite its lower efficiency)

Principle No. 6 – Design for Energy Efficiency: the use of energy in a process leads directly or indirectly to emissions, typically carbon dioxide and nitrogen oxides emissions. These emissions should be minimized. In this regard, energy efficiencies can be attained by such examples as:

- Operating equipment at ambient temperature
- Operating equipment at ambient pressure
- Adding heat integration strategies – i.e., using heat exchangers
- Insulating equipment properly
- Using catalysts

Principle No. 7 – Use Renewable Feed Stocks: The use of renewable feedstocks should be considered whenever practical and economical (e.g., the use of bio-fuels vs petro-based fuels is an example).

Principle No. 8 – Reduce Derivatives: Whenever possible, the chemistry of a process should be simplified to reduce the number of steps in the synthesis, which typically reduces reagents use and waste generation. (e.g., some aniline producers have been working for some time in the development of technology for the production of aniline directly from benzene rather than through

the intermediate nitrobenzene molecule. Currently benzene is converted to nitrobenzene before it is converted to aniline, leading to the formation of significant waste streams.)

Principle 9 – Catalyst: This principle refers specifically to the recommendation of using catalytic reagent rather than stoichiometric reagents. In other words, the chemistry of the process should look into incorporating catalysts if they reduce the use of chemical feedstocks. Catalysts allow us to decrease the activation energy of chemical transformations, enhance the reaction rate, and facilitate selectivity. They are also important at reducing the number of process steps.

Principle 10 – Design for Degradation: Chemical products should be designed, whenever possible, to break down into non-toxic forms after their function is complete. (e.g., disinfection of swimming pools is typically done with chlorine. However, many pools are shifting to the use of ozone. Ozone is a strong oxidizer with a very short half-life. After addition into water, ozone quickly kills pathogens before decomposing to non-harmful oxygen.)

Principle 11 – Real-time Analysis for Pollution Control: Analytical methods, instrumentation and process control need to be used to perform in-process monitoring and control before hazardous substances form or are released. (e.g., in the production of nitrobenzene, close control of the reaction conditions, using sophisticated control systems, is performed to minimize the formation of nitrophenol by-products, which are very toxic and highly unstable).

Principle 12 – Inherently Safer Chemistry for Accident Prevention: Whenever possible, all chemicals in a process, and their phases, should be selected to minimize hazards, such as explosions, fires, or environmental releases. (e.g., as per example under Principle 4, the shift of chlorine to chlorate in the bleaching of pulp, led to a significant decrease in the potential for toxic environmental releases).

3.2.1 Green Chemistry Metrics

The twelve green chemistry principles are qualitative in nature. However, significant efforts have been invested by many researchers in developing metrics that can be used to compare processes in regards to the GCP. A summary of mass-based green chemistry metrics and energy-based green chemistry metrics, as summarized by Maranghi (1), is presented in Table 3.2 and 3.3. The selection of relevant metrics are project specific.

Table 3.2 – Summary of Relevant Mass-Based Green Chemistry Metrics

Metric Name	Equation
Environmental factor (E_f)	$E_f = \frac{total\ waste\ (kg)}{mass\ of\ product\ (kg)}$
Mass intensity (MI)	$MI = \frac{total\ mass\ used\ in\ process\ (kg)}{mass\ of\ product\ (kg)}$
Mass productivity (MP)	$MP = \frac{1}{MI} \times 100$
Atom economy – for generic reaction A + B => C (AE)	$AE = \left(\frac{MW\ of\ C}{MW\ of\ A + MW\ of\ B}\right) \times 100$
Atom utilization (AU)	$AU = \left(\frac{mass\ of\ the\ product}{total\ mass\ of\ all\ the\ substances\ produced}\right) \times 100$
Relative mass efficiency (RME)	$RME = \left(\frac{mass\ of\ the\ product}{total\ mass\ of\ the\ stoichiometric\ reagents}\right) \times 100$
Element (X) Efficiency (XEE)	$XEE = \frac{mass\ of\ the\ element\ X\ in\ the\ product}{total\ mass\ of\ the\ element\ X\ in\ the\ stoichiometric\ reagents}$
Carbon efficiency (CE)	$CE = \left(\frac{moles\ of\ carbon\ in\ the\ product}{moles\ of\ carbon\ in\ the\ reactants}\right) \times 100$
Wastewater intensity (WWI)	$WWI = \frac{mass\ of\ process\ water\ (kg)}{mass\ of\ product\ (kg)}$
Solvent intensity (SI)	$SI = \frac{mass\ of\ solvent\ (kg)}{mass\ of\ product\ (kg)}$
Effective mass yield (EMY)	$EMY = \frac{mass\ of\ product\ (kg)}{mass\ of\ non-benign\ materials\ used\ (kg)}$

Table 3.3 – Summary of Relevant Energy-Based Green Chemistry Metrics

Metric Name	Equation
Energy efficiency (E_E)	$E_E = \frac{mass\ of\ product\ (kg)}{energy\ consumption\ (kJ)}$
Specific productivity (sP)	$sP = \frac{amount\ of\ product\ (mol)}{electric\ work\ (kWh)}$
Energetic reaction expenditure (A_r)	$A_r = \frac{energy\ consumption\ during\ reaction\ (W)}{mass\ of\ product\ (kg)}$
Energetic workup expenditure (A_w)	$A_w = \frac{energy\ consumption\ during\ workup\ (W)}{mass\ of\ product\ (kg)}$
Energetic process expenditure (A_p)	$A_p = A_r + A_w = \frac{1}{E_E}$

3.2.2 Final Comments on GCP

The application of GCP in the development of a process is always relevant. The principles help us improve the efficiency and sustainability of a process, which is truly applicable to the development of a complete process and mass and energy balance at the early stages of a TEA.

3.3 Techno-economic Analysis (TEA)

Through this section, we will review what a TEA is, what its parts are, and how to complete those parts. However, it all starts by stating the motivations for completing a TEA, which define the objectives of the study, and therefore the framework of the analysis. As briefly discussed in Module 2, there may be a number of reasons for moving a technology through the different development phases and eventual commercialization. Changes in legislation or regulations, environmental pull, or technical / economic advantages are just some examples.

In the late 1990's, the author of these modules was part of an engineering team developing a technical solution to a new industrial challenge introduced by changes in legislation in North America. More specifically, new regulations came into effect limiting the amount of bromine that could be present in the chlorine used for disinfecting water, which directly affected some chlorine producers. At the time, there was no readily available technology to effectively remove bromine from the product chlorine produced in chloralkali plants. The engineering team looked into several novel approaches, but the reality of the situation was that with the operating future of these plants on the line, the technical solution was somewhat insensitive to cost, a quick solution was more important. Changes in regulations, rather than technical or economic advantages, were driving the development of this technology. Another example of non-technical or non-economic forces driving the development and commercialization of a technology was the quick creation of Covid-19 vaccines through the pandemic of 2020-2021. These examples are more exceptions than the norm. The reality is that economic and technical advantages drive most process development projects. Therefore, through the following sections we are focusing on the more complex development environment where competing technologies are available, and technical and economic forces matter when deciding whether a process technology has a commercial edge or not, and therefore whether or not it should be moved through the development phases. It is the TEA that looks in some detail at the economic and technical aspects of an upcoming technology.

The TEA is a methodology framework used to analyze the potential technical and economic performance of a process. TEAs normally combine process modeling, engineering design, and economic reviews. Its output provides an objective technical and economic assessment of the technology under review, but such an assessment is continuously evolving and refining as the process or technology moves forward through the different phases of development described in Figure 3.1.

There are no standards for the work or reporting involved in producing a TEA. Most companies use their own internal standards. However, most TEAs typically follow similar phases:

- Definition of **goal and scope** of the study
- Definition of the **boundaries or limits** for the study
- **Calculations** and **interpretation** of the results
- **Reporting**

The **scope and goals** of the study must be clearly defined early on. It should:

- Include the reason for the study
- Provide context for the technology under development (e.g., where does it fit? What are the competing technologies? How will it be compared? etc.)
- List the starting assumptions (e.g., where will the technology be implemented? time horizon, scale, etc.)
- Determine how the results will be reported

The market segment must be well defined so that competing technologies can be properly selected.

As the scope and goals are defined, it is also very important that the audience, and their needs, is well understood. The typical audience (i.e., the group the TEA is prepared for) may include, for example, technical managers, business managers and investors, or policy makers. Technical managers typically expect detailed technical results that provide feedback that can be used to plan the next phases of development. Business managers and investors typically expect clear economic indicators and general technical overviews that can be used to define funding and resource needs and allocations. Policy makers typically look for general summaries, with information on broader issues such as environmental impact, societal impact, and/or economic effect.

Typical goals of a TEA may include:

- Evaluating the technical and economic advantages/disadvantages of a technology

- Identifying the technical areas of a technology requiring de-risking work, and mapping out an action plan to de-risk identified areas of concerns
- Based on the economic and technical evaluations, providing a framework to decide whether or not the development of a technology should continue

The **boundary** and **limits** for a TEA study refers to the equipment or systems that are included in the analysis (e.g., in the production of hydrogen the need for compressing the final product may or may not be required, but it will significantly affect the results of the review one way or the other because compression of hydrogen is a challenging and expensive process step). We should also consider that the boundary and limits of a TEA can be affected by the audience of the work. For example, technical management or business management tends to focus the review of the study around company activities, a gate-to-gate approach as defined in section 3.1. On the other hand, policy makers are more interested on gate-to-grave or cradle-to-grave reviews – i.e., how will the product from the process impact the environment and/or societal needs? This could mean that the limits of the study may need to include a whole value chain, involving more than one organization.

The definition of boundary and limits becomes even more complex when dealing with the analysis of *non-substitute* technologies. To make this point clearer, let us refer to the example that we have been working through. This involves the potential replacement of incumbent nitrobenzene process technology with novel nitrobenzene process technology. In this case, the TEA would involve the analysis of a *substitute* technology. As previously discussed, nitrobenzene is made using benzene as a feedstock, and most nitrobenzene is used to make aniline. As a result, an example of a *non-substitute* technology would be a first-of-its-kind process technology that makes aniline directly from benzene, without having to make nitrobenzene as an intermediate chemical. The question to answer now is, where should the boundary of the study be set to properly assess the benefits of the novel non-substitute technology against the incumbent process? Careful consideration is required.

Through the remainder of this section, we are focusing on the **calculation** and **interpretation** parts of the analysis since they are arguably the most technically challenging parts of a TEA. Within the context of chemical and biological processes and in broad terms, the steps involved are:

- Defining the systems involved within the boundary of the study, typically the development of a Block Flow Diagram (BFD) for the process

- Developing a detailed flowsheet for the overall process
- Creating a mass and energy balance
- Sizing of the process equipment involved in the process
- Determining the process OPEX and CAPEX
- Calculating the process economics
- Defining the identified technical risks
- Performing a sensitivity analysis

Figure 3.5 provides a graphical representation of the calculations and interpretation steps.

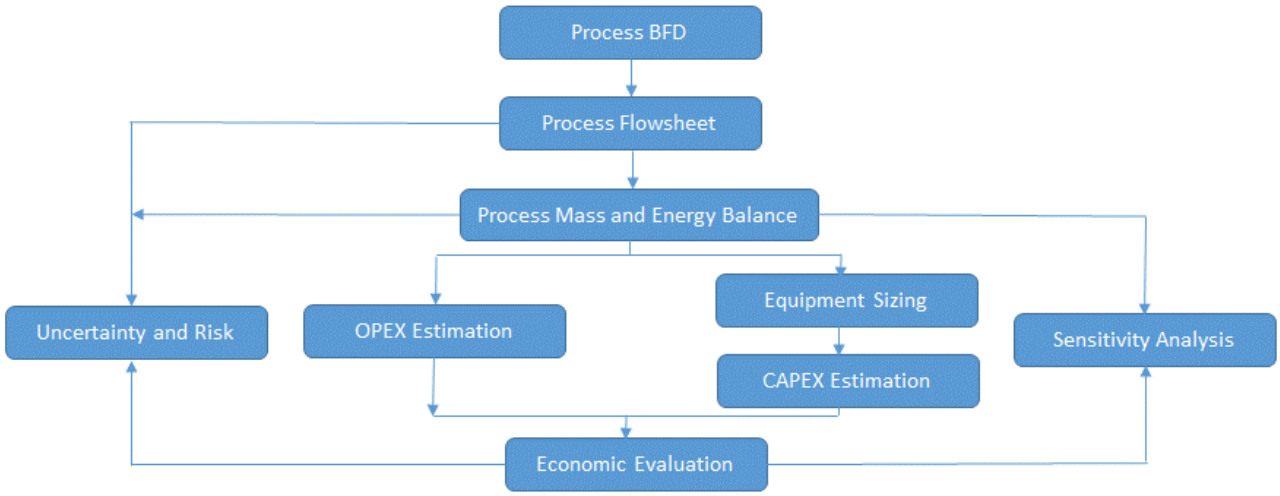

Figure 3.5 – Typical Calculation and Interpretation Steps of a TEA

In general, the steps involve a detailed definition of the process systems, followed by the preparation of a mass and energy balance, which allows for an estimation of the process capital cost and operating cost, which can then be used to complete an economic analysis of the process. The scope and interpretation of the calculations are driven by the goals of the TEA. For example, if one of the objectives of the TEA is to account for the green-house emissions of a process, then

a complete carbon balance would form part of the mass and energy balance, and the result would likely be compared to similar processes to assess the overall environmental footprint. The sensitivity analysis typically involves the manipulation of process variables in the mass and energy balance model of the process to assess which variables have the largest impact on the objectives or goals of the study, the results of which typically helps in focusing the development work ahead.

The economic evaluation typically involves the estimation of an internal rate of return (IRR) for the project, based on net present values (NPV) of costs and revenues, which is then compared to the stakeholders (e.g., investors) minimum return on investment (MRR) expectation. We will work through the details of this analysis later.

The uncertainty and risk analysis can be a quantitative review involving tools like a Monte Carlo simulation, which are used to predict the benefits or disadvantages of different outcomes. However in some cases, it involves a qualitative review where all the assumptions made to complete the calculations and work are tabulated and evaluated against their potential impact on the development of the technology. The assumptions that are assessed as introducing significant risk to the project are evaluated more closely through the future de-risking phases of the development pathway.

The **reporting** part of a TEA typically involves the preparation of a final report covering all phases of the study, including the goals and scope, boundary and limits, calculations and interpretation, and summary of risks and uncertainties. The report must present all assumptions, calculation methods, results, recommendations and limitations of the results. It is important to keep in mind the audience when defining the structure of the report.

As mentioned in the introduction of this module, a TEA is typically developed concurrently with a business plan and a market assessment. All these documents have feedback loops that affect each other's progress, so we need to keep that in mind as we work through a TEA. For example, the business analysis may identify that market penetration may involve aggressive pricing and that product quality is less important, or vice versa, which in either case affects the approach to the overall process design.

The development work ahead in the scale-up and commercialization path, beyond the preparation of a TEA report and business plan, typically requires significant funding. And it is the TEA report and business plan, including the market analysis, which are typically heavily relied on to attract investment.

Let us now dive into the **calculation** and **interpretation** steps involved in a TEA.

3.3.1 Development of a Complete Process

Developing a complete process, or flowsheet, around a technology is arguably the most technical and challenging part of a TEA. But what do we mean by developing a whole process? The answer really depends on the technology being developed. In general, the overall process should include all peripheral process steps that can affect the technical and economic assessment of the technology, and this involves careful consideration in defining the boundary and limits of the TEA. A lot of judgement is required. For example, let us consider the development of a new electrolyzer for the production of chlorine that has the ability to use a less pure feed (e.g. a feed with a higher concentration of hardness) but that produces the same quality of chlorine product (i.e., same yield, conversion, and by-product species) as the incumbent technology. In this particular case, the overall process should definitely include the feed purification process steps but would not necessarily need to include the downstream process steps from the electrolyzer. As a matter of completeness, downstream steps could be included, but they would not make any difference in the final technical and economic assessment of the technology.

A good follow-up question would be, how representative the overall process needs to be for the TEA assessment to be accurate? Again, the answer really depends on the technology being developed. When assessing the core part of the technology (i.e., the innovation part) against incumbent technologies, the process must be as representative as possible against the industrial set-up. However, peripheral process steps do not need to be an exact representation of what industry is using (i.e., many times we just do not know enough of what these steps are because the information is not public). What is important is that the process steps selected allow for a fair technical and economic comparison of the novel technology against the incumbent technology. For example, when assessing the peripheral process steps used to purify the brine reaching an electrolyzer producing chlorine, we may know that settlers are involved, but we may not know the types of settlers used by industry. Does it really matter for the purpose of the assessment? Likely not. We should be able to pick a settler type and assess the size differential and complexity driven by the difference in electrolyzer technologies.

The development of an overall process flowsheet requires much process knowledge and industrial experience, and a good understanding of process synthesis, modeling and unit

operation design. It is assumed here that the development team working through the TEA has sufficient understanding of process synthesis, modeling, and unit operation design since these technical areas are extensively covered in undergraduate engineering courses. However in brief, process synthesis involves the integration of unit operations for a specific process purpose (e.g., production of a specific chemical product), and unit operations are selected around the following typical process tasks,

- Storage
- Reaction
- Displacement
- Separation
- Heat exchange
- Special task

Any of the above tasks can be performed on either a batch or continuous mode which may affect the unit operation style selected for the job. Some examples of unit operations for each of the above tasks are shown in Table 3.4. An extensive list is provided by Seider (4).

Table 3.4 – Examples of Unit Operations

Tasks	**Unit Operation Style Example**				
Storage	Tank	Vessel	Lagoon/pond	Silo	Hopper
Reaction	Stirred vessel*	Plug flow	Fluidized bed	Autoclaves	Catalytic
Displacement	Pump	Blower	Fan	Compressor	Conveyor
Separation	Distillation	Absorber	Adsorber	Extractor	Settler
Separation	Filter	Crystallizer	Flash	Centrifuge	Ion Exchange
Separation	Cyclones	Screens	Membrane	Hydrocyclone	Air Flotation
Heat Exchange	Exchanger	Boiler	Furnace	Chiller	Direct contact
Special Tasks	Turbines	Grinders	Mixers	Agglomerator	Vacuum Venturi

**Stirred vessels include batch reactors, continuous stirred tank reactor (CSTR), semi-batch reactors*

Once the process is defined and the unit operations (i.e., equipment) are selected, we are now in a position to start modeling work. As described in more detail later, modeling refers to the development of a set of mathematical equations that can represent the technical performance of the process. We are specifically talking about the development of a mass and energy balance.

Moving forward, we will discuss the flowsheet development around process innovations involving reactions. However, the methodology applies to any process (e.g., a novel extraction process, a membrane separation process, etc.).

To start the development of a complete process, we typically need information and data around two areas:

- Qualities the feeds and product need to meet
- Emission standards that need to be followed

Data and information on the quality the feeds or product needs to meet provides guidelines on the purification steps that the process may require. For example, in the choralkali process the feed is brine (i.e., sodium chloride solution), and this brine must have limited hardness on ppb levels before it enters the electrolyzer reactors, which is why the chloralkali process includes several unit operations (i.e., mixers, settling tanks, and filters) to purify the brine. As a further example, the final chlorine product produced by the chloralkali process must have a very low concentration of nitrogen trichloride, a by-product of the reaction of sodium chloride to chlorine, which is why chloralkali plants have different strategies (i.e., unit operations) to remove this by-product downstream of the electrolyzers, e.g., absorbers.

In Module 2, under section 2.1.4, different strategies were discussed on how to obtain the required quality data that the product must meet. The same strategies can be applied to find the quality that the feeds must meet. However, it is likely that the latter was already defined through the laboratory work or bench work already completed through the early phases of the on-going scale-up and commercialization project.

In Module 2, under section 2.1.5, an approach in determining the environmental requirements that the process must meet in regards to emissions was discussed. The reader should refer to that section.

Selecting the process steps to meet the identified process feed / product qualities and emission standards is process specific, and as it was previously mentioned, it requires process synthesis and industrial experience. Integrating process steps to an overall process adds to the challenge. Fortunately, there is an overall hierarchy that is typically followed in selecting and integrating the process areas of a complete process, leading to a backbone structure that can be used to start building the process flowsheet. Figure 3.6 shows the overall hierarchy structure of a chemical or biological process. At the highest level, we have the reaction area, which produces the product, by-products, and other wastes. This area is followed by the product purification area, which is followed by the effluent treatment area. Finally, the heat integration and recovery strategy areas are added. To better understand the process integration concept, we will work later through an example to show the overall approach.

Figure 3.6 – Hierarchy of Process Areas in the Development of a Flowsheet

At this point of the development process and based on the results of the bench-scale work that should have been completed by now, a typical development project should have sufficient data and information about the reaction steps of the process. We should also know the specifications that both the product and the waste streams must meet. What follows, as a first step, is the development of an expanded block flow diagram for the overall process – refer to section 2.1.1 in Module 2 for a discussion on BFDs. This expanded BFD should cover all relevant parts of the overall process.

As an example, Figure 3.7 shows the first pass BFD, presented first in Module 2, and the new expanded BFD for the nitrobenzene process example that we are following through the different sections of these modules[19]. In the expanded BFD, we are adding the steps to clean up the waste gas and wastewater generated by the process. The cleanup of the flue gas and wastewater adds

[19] **As mentioned in Module 1, facts and data presented through this example may not be accurate. They may have been altered to enhance the learning outcome.**

to the overall operating and capital costs compared against the incumbent technology (i.e., as discussed in Module 2, the new technology produces less waste gas and less wastewater). As determined in Module 2, the addition of the process steps to clean the gas stream and wastewater stream should consider the following process requirements:

- Scrubbing of the process vent
- pH adjustment of the wastewater
- Removal of organics from the wastewater
- Reduction of the BOD of the wastewater

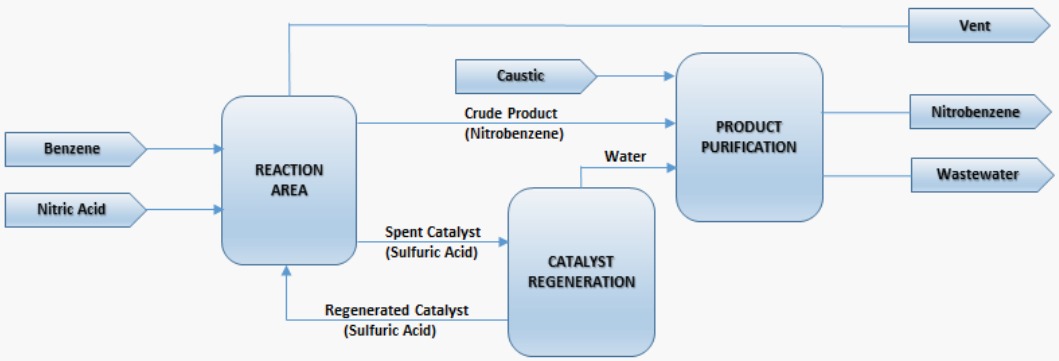

(a)

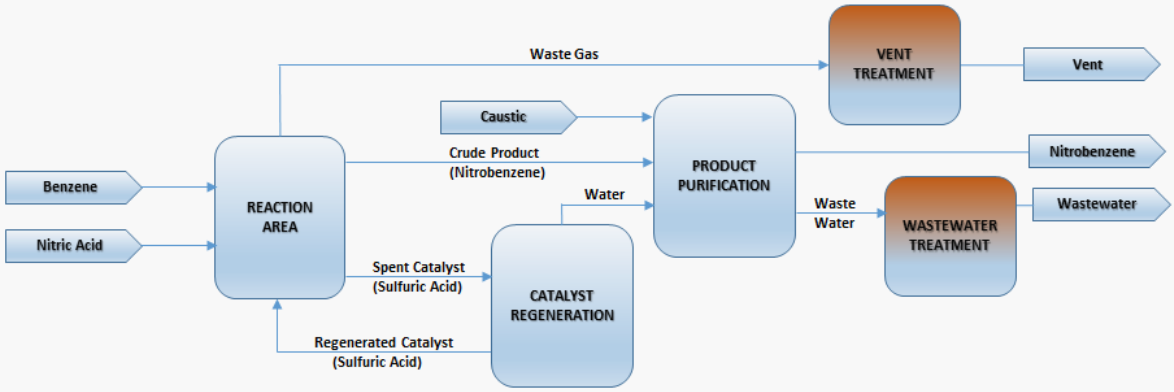

(b)

Figure 3.7 – BFDs for Nitrobenzene Process Example (a) First Pass, (b) Expanded

Now it is time to dig deeper into the open literature to find what process ideas and unit operations should be added and combined in the different blocks of the BFD to meet all required specifications. We are looking to develop the BFD into a Process Flow Diagram (PFD) or flowsheet. This work first involves identifying the transformation steps within each BFD block. These transformations are carried out through one or more of reaction, separation, mixing, heating, cooling, pressure change, particle size reduction or enlargement. To determine what unit operations may be required to obtain those transformations (e.g., a pump to increase the liquid product pressure, or a heat exchanger to cool the wastewater), the review of the open literature, and more specifically the patent landscape for the specific process under development, is a great starting point. If little is available in the open literature, then we are going to need to rely on experience and detailed process knowledge. As a good reference, a detailed summary of processes and unit operations that can be considered in the treatment of waste gas or wastewater from process plants can be found in Smith (13), chapters 25 and 26 respectively.

Let us now discuss in more detail how to develop a process PFD for a complete process. The PFD, similar to a BFD, shows how the materials entering the process flow through the overall process going through transformations along the way. Different from a BFD, the flowsheet shows all the unit operations involved in the process (e.g., reactors, pumps, heat exchangers, distillation columns, mixers, etc.). In a first step, a flowsheet connecting all the unit operations within each block of the BFD is developed. In a second step, the individual flowsheets within each BDF are combined into an overall process flowsheet. This integration must be done carefully, paying particular attention to the green chemistry principles (GCP) discussed in section 3.2. Once the overall flowsheet (i.e, PFD) is complete, the development of a mass and energy balance model for the flowsheet follows.

In Appendix B, the detailed step-by-step development of a PFD for the nitrobenzene process example that we have been following is presented. The final developed PFD is presented in Figure 3.8. The approach used to develop this overall PFD, which is typical to any process, followed the approach described above, and it can be summarized as follows:

- Following the process hierarchy shown in Figure 3.6, the reactor BFD was worked on first, followed by the product purification step, the effluent treatment step, and finally the heat integration step.
- The open literature, and experience, was used to identify all the unit operations required within each BFD. These unit operations, within each block, were integrated into individual flowsheets (PFDs).

- Finally the individual PFDs were integrated into an overall PFD for the whole process while adding heat integration strategies to increase the overall process efficiency.

In complex processes involving recycle streams among BFDs, the integration of the individual PFDs may be challenging (i.e., sometime there are options to where a recycle stream could be routed to). The best approach to resolve this issue is to first select a sensible destination for any recycle stream to complete the overall PFD. The mass and energy balance work that follows will provide good inside knowledge to evaluate where the recycle stream should end up (i.e., playing with the mass and energy balance model, we can determine the overall efficiency of the process for different recycle destination options).

As shown in Appendix B, many assumptions had to be made to develop the individual and overall PFD for the process of our example. This is very typical at this early stage of the development work where much is unknown. And it is here that we are starting to identify process development risks. Each of these assumptions is a process risk that must be eventually assessed, as further discussed later. Table 3.5 presents the main assumptions made in the development of the PFD of the nitrobenzene process example.

Table 3.5 – Assumptions Made in the Development of the PFD that Introduced Process Risk

Reaction Area	
	Acceptable conversion can be attained without a stirred reactor downstream of the main plug flow reactor, R-101 (patent literature calls for the potential need of a stirred reactor)
	A pump is not required for the sulfuric acid from the Product Separator (S-102) to the Acid Evaporator (F-103) (the volume of acid is large, may not be possible to gravity flow)
Product Purification	
	The partition coefficients for the nitrophenol between the nitrobenzene and caustic solutions are high enough that one stage of washing is sufficient to remove the nitropenols from the nitrobenzene below 10 ppm (more than one washing stage may be required)
	The separation between the nitrobenzene and the caustic solution in Nitrobenzene/Caustic Solution Separator (S-111) is very good, leading to insignificant caustic leaving with the product nitrobenzene, which could present a product quality issue if it is not the case.

Side Note - It should be noted that the PFD in Figure 3.8 applies to both the novel technology of our example and the incumbent technology that the novel technology is being compared against. In general, significant changes in reactant types, yields, by-product formation, or energy requirements may lead to significant physical changes to the process, and therefore to potentially different PFDs. However in our example, only the amount of by-product formation changes marginally between the incumbent technology and the novel process. As a result, the flowsheet for the incumbent technology can be assumed to be the same. But, even though the PFD for both the novel technology and the incumbent technology is the same, there will be differences between the mass and energy balances which will lead to different OPEX numbers. As we will see later, there will also be different CAPEX numbers between the two cases.

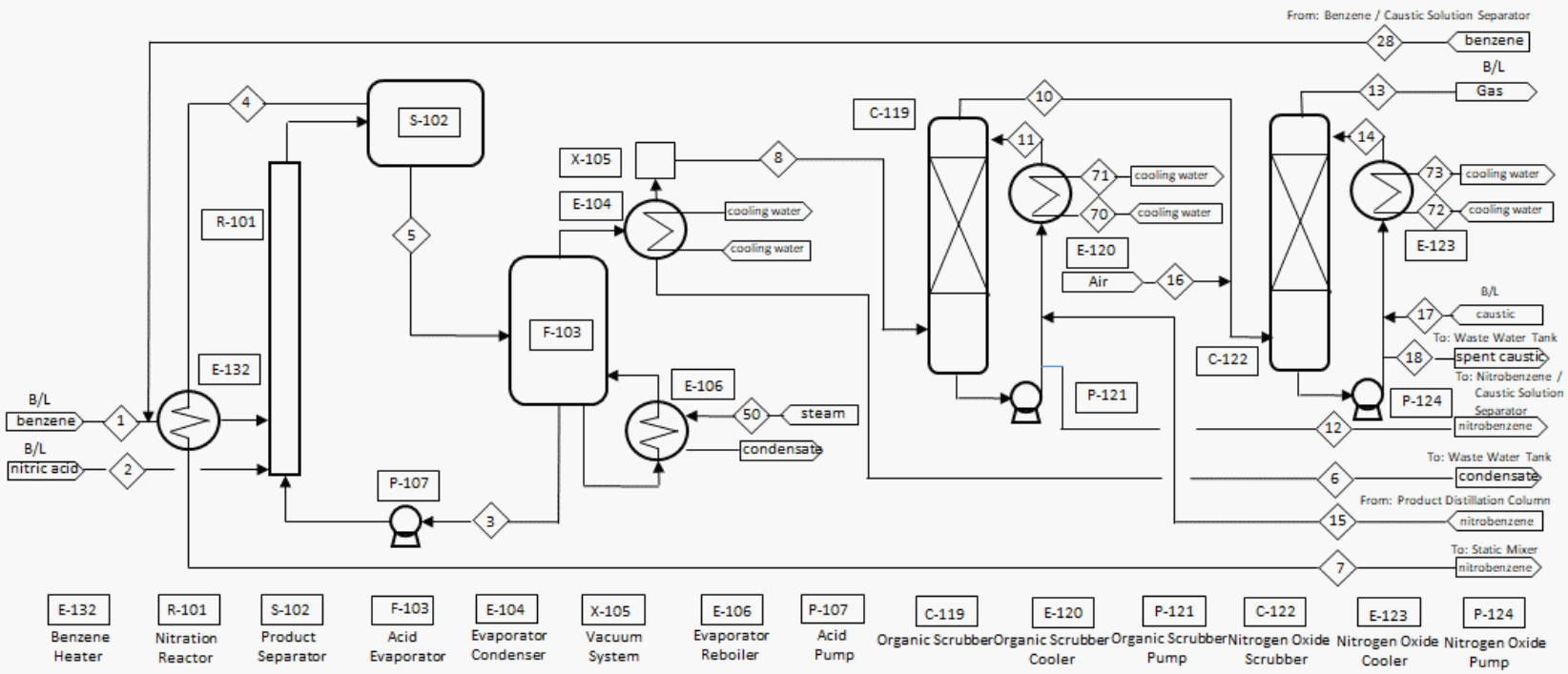

Figure 3.8 – Part 1 – Process Overall Flowsheet

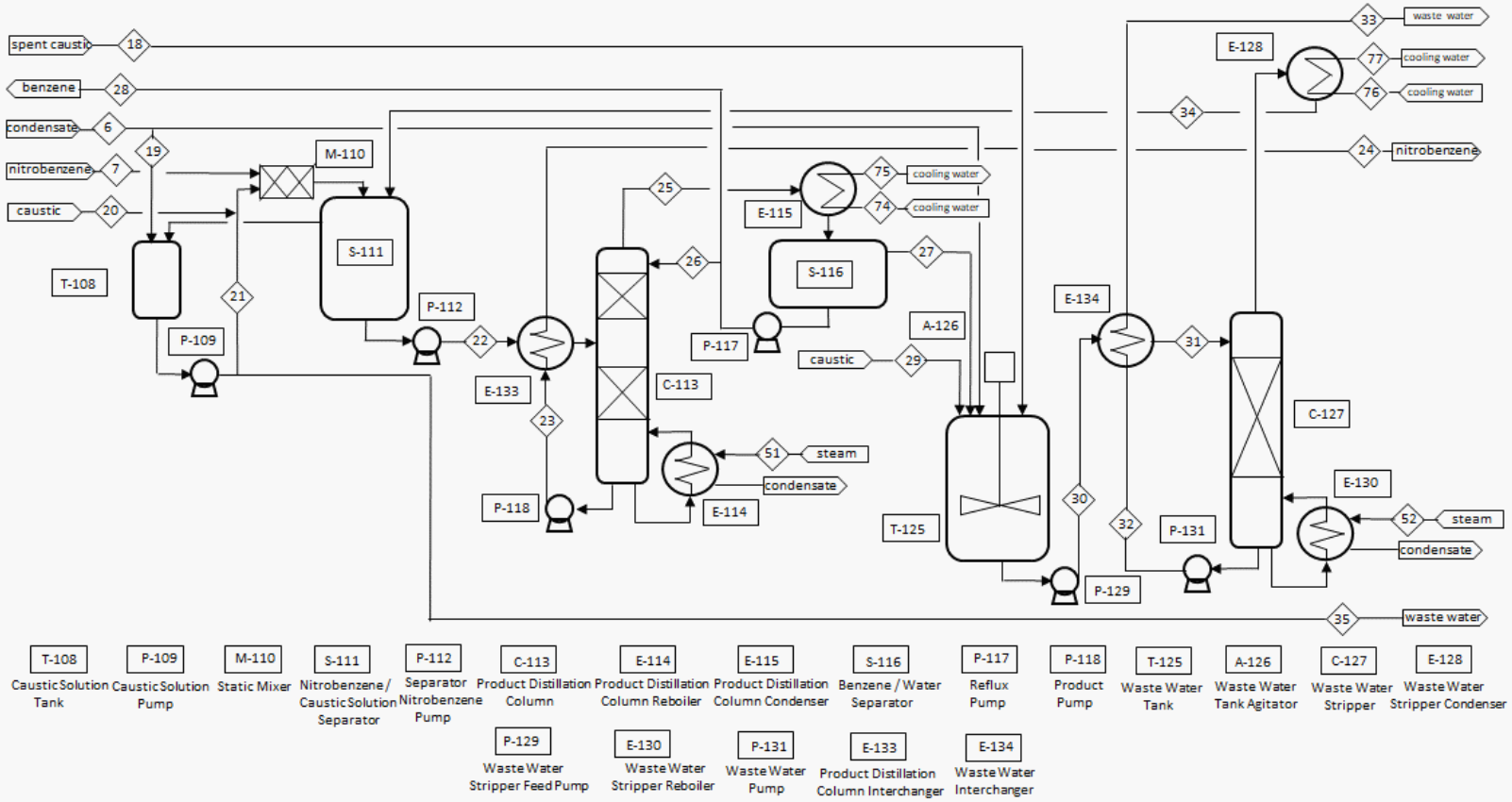

Figure 3.8 – Part 2 – Process Overall Flowsheet

We are now out of arguably the most challenging part of the development phase of a TEA, the development of an initial PFD for the overall process. Let us stress that this is an initial PFD. And if the reader has followed the development of the sample PFD by reading through Appendix B, it would likely has become apparent that putting together a whole process around an invention idea requires significant judgement, and good judgement comes from experience. Unfortunately, only practice can provide that experience.

The reader is forewarned that the work involved in further developing a complete PFD is iterative in nature, with the developer proposing process steps to meet requirements, and the modeling work (i.e., the results from the mass and energy balance) providing a feedback loop that can lead to changes to the proposed process steps. Let us now discuss the development of mass and energy balances.

3.3.2 The Mass and Energy Balance

The mass and energy balance is a mathematical model of the developed process flowsheet that attempts to predict how the process would behave if constructed. It typically involves thermodynamics, mass transfer, and heat transfer principles. It is used to predict or define flowrates, compositions, temperatures and pressures throughout the process. It provides data and information on raw material consumption, product and waste stream generation, stream compositions, and energy consumption or production. This is key data for the sizing of the unit operations making up the process.

Through the calculation part of a TEA, the mass and energy balance data is used to:

- Estimate the OPEX of the process
- Preliminarily size the equipment
- Estimate the CAPEX of the process
- Identify process risk areas

The mass and energy data can also be used to complete the LCA of the process.

In a mass and energy balance of a process, typically the mass going in and out of every unit operation and the energy changes within that unit operation are estimated and recorded. Any transformation, such as a compound reacting to form another compound, is also estimated. This is modeling work, and the work involved is only possible if a good database of relevant physical properties for all compounds forming part of the process is available. For example, to estimate

the specific heating or cooling requirements of a heat exchanger, we need to know the heat capacity of the streams flowing through the heat exchanger. Therefore, the next step through the calculation part of a TEA typically involves the gathering of physical property data to generate correlations that can be used in the model to predict physical property changes along the flowsheet of the overall process. In general, there are a large number of physical properties that could be considered. However, Table 3.6 provides a list of typical physical properties of interest that could form the initial list. Physical properties estimation correlations should be developed for the pure compounds, both in the liquid and gas phases. For stream mixtures, correlations for mixed compounds (i.e, using physical property mixing rules) need to be developed. Reid (22) provides mixing correlations for density, viscosity, thermal conductivity, surface tension, critical temperature, critical pressure, and critical volume. Other correlations can be found in the open literature. However, we are fortunate that nowadays engineers work with process modeling tools such as ASPEN Plus or HYSYS Plus that have large built-in libraries of physical properties and methodologies for estimating physical properties for individual compounds or mixtures. These estimates are based on equation of states or activity coefficient models. However, these modeling tools should not be trusted blindly. Actual data should always be used to check on the accuracy of the estimated physical properties of these models. If the estimated physical properties are not accurate, the resultant mass and energy balance will not be accurate.

Table 3.6 – Initial List of Physical Properties of Interest

Mass and Energy Balance	**Thermodynamics**
Density	Critical Temperature
Molecular Weight	Critical Pressure
Specific Heat	Critical Volume
Vapor Pressure	**Mass Transfer**
Solubility	Surface Tension
Heat of Reaction	Viscosity
Latent Heat	**Heat Transfer**
Heat of Fusion	Thermal Conductivity

The development of mass and energy balances is well covered in second and third year undergraduate engineering courses, and therefore it is assumed here that the reader is familiar

with the work involved. In general, mass and energy balances can be completed using engineering principles and tools such as a spreadsheet, but it is now more common to directly use modeling tools such as ASPEN Plus, HYSYS Plus, ProSim Plus, or CADSim Plus for completing this work. These are commercial modeling packages. However, some less powerful open source modeling tools are also available. Wikipedia, under "List of Chemical Process Simulators", provides an extensive list of both commercial and open source process modeling tool options.

In addition to adequate physical property data, we may also need process specific data before we can move ahead with developing the mass and energy balance. Some examples of process specific data are reaction conversion or yield data. Process specific data typically refers to data that must be experimentally obtained (i.e., data that cannot be predicted, or be poorly estimated, using modeling tools). Table 3.7 provides a few more examples of process specific data.

Table 3.7 – Examples of Process Specific Data

Unit Operation	Process Specific Data #1	Process Specific Data #2
Reactor	Yield	Conversion
Gravity Separator	Settling rate	Entrainment rates
Membrane Separator	Rejection rate	
Ion exchange	Selectivity coefficient	
Cyclones	particle size distribution	

Other data and information required to develop a preliminary mass and energy balance are the specifications for the utilities to be used in the process. By specifications, we typically mean the temperatures and pressures of the utilities. Key utilities of interests are cooling water and steam. Other utilities that may be relevant, depending on the process being evaluated, are compressed air, compressed nitrogen, electrical power, or chilled water.

Summarizing, to develop the mass and energy balance of a process, we need to bring together the following:

- The developed PFD (i.e., flowsheet)
- The process requirements used to develop the PFD

- The physical property database
- The relevant process specific data
- The utility specifications

To complete the mass and energy balance, assumptions will likely need to be made around areas where there is no data or the data is not reliable. It is these assumptions that will define more of the process risk areas that will need eventual de-risking work. Table 3.8 presents the main assumptions made in developing the mass and energy balance for the nitrobenzene process example we have been following. These are assumptions deemed to introduce risk in the process development work. They will be discussed and evaluated further in the latter part of this module.

Table 3.8 – Key Assumptions Made in the Development of the Mass and Energy Balance that Introduced Process Risk

Reaction Area	
	Full conversion is obtained in approximately 70 seconds for the operating conditions selected (this is based on patent data, but not sufficient kinetic data is available)
	The separation of the nitrobenzene and the acid in the Product Separator (S-102) is complete (i.e., at the exit of the unit, insignificant entrainment of one phase on the other) occurs
	Insignificant sulfuric acid is entrained with the water vapor leaving the Acid Evaporator (F-103) (this could affect how much acid is lost in the process)
Product Purification	
	The partition coefficients for the nitrophenol between the nitrobenzene and caustic solutions are high enough that one stage of washing is sufficient to remove the nitropenols from the nitrobenzene below 10 ppm (more than one washing stage may be required)
	The separation between the nitrobenzene and the caustic solution in Nitrobenzene/Caustic Solution Separator (S-111) is very good, leading to insignificant caustic leaving with the product nitrobenzene, which could present a product quality issue if it is not the case.
Effluent Treatment	
	The waste water effluent can be neutralized using a single stage of neutralization (in many processes two stages are required)

Figure 3.9 and 3.10 show the complete PFD and associated mass and energy balance for both the novel technology and incumbent technology of the example that we have been following.

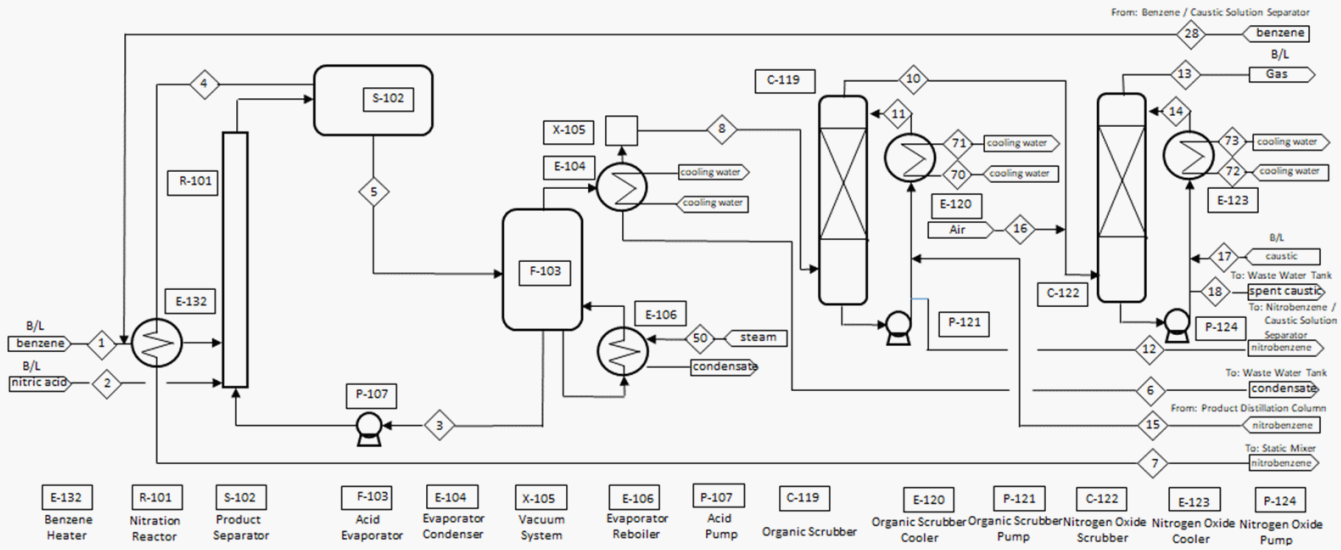

Description		Benzene from B/L	Nitric Acid from B/L	Strong Acid	Hot Nitrobenzene	Weak Acid	Waste Water	Cool Nitrobenzene	Waste Gas	Waste Gas (no organics)	Stripping Nitrobenzene	Purged Stripping Nitrobenzene	Waste Gas (no NOx)	Stripping Caustic	Make-up Stripping Nitrobenzene	Air	Scrubber Make-up Caustic	Purged Stripping Caustic	Recycled Benzene	Steam to Flash Unit	Cooling Water Feed to Org. Scrubber	Cooling Water Return from Org. Scrubber	Cooling Water Feed to NOx Scrubber	Cooling Water Return from NOx Scrubber			
Stream Number		1	2	3	4	5	6	7	8	10	11	12	13	14	15	16	17	18	28	50	70	71	72	73			
Phase																											
Temperature	C	20	20	110	135	135	35	70	35	20	20	21	20	20		20	20	20	20	144	18	19	18	19			
Pressure	Bar(a)	4	4	4	1	1	1	1	1	1	1	1	1	1	1	1	1	1	1	4	1	1	1	1			
Total Flow	kg/h	7940	9873	222782	12830	228163	5378	12830	2.39	2.35	500	100	22	500	100	23	31	34	397	880	500	500	500	500			
$C_6H_5(NO_2)$	kg/h				12386	114	114	12386	0.01	0.00	500	100	0.00		100												
C_6H_6	kg/h	7940			397			397							0.00				397								
HNO_3	kg/h		6418																								
H_2SO_4	kg/h			154834		154834																					
H_2O	kg/h		3456	67949	25	73213	5264	25	0.08	0.04	0.20	0.04	0.04	414	0.00		27.7	28.4		880	500	500	500	500			
NO	kg/h					2.31			2.31	2.31			0.00														
$C_6H_3(NO_2)_2OH$	kg/h				21.25			21.25			0.00	0.00			0.00												
$C_6H_4(NO_2)_2$	kg/h				0.63			0.63																			
NaOH	kg/h													0			3.08	0.01									
$C_6H_3(NO_2)_2ONa$	kg/h																										
$NaNO_3/NaNO_2$	kg/h													86				6									
O_2	kg/h												4.1			5.4											
N_2	kg/h												17.7			17.7											
Density	kg/m3	880	1390	1550	1110	1495	992	1160	1.2	1.2	1200	1200	1.2	1140	1180	1.2	1140	1140	880	2.1	991	991	991	991			
Viscocity	cP	0.7	2.1	1.7	0.5	1.2	0.7	1.0	0.02	0.02	2.0	2.0	0.02	2.8	1.5	0.02	2.8	2.8	0.7	0.02	1.0	1.0	1.0	1.0			
Heat Capacity	kJ/kg C	1.7	2.6	2.2	2.0	2.3	4.2	1.6	1.0	1.0	1.5	1.5	1.0	3.8	1.8	1.0	3.8	3.8	1.7	1.9	4.2	4.2	4.2	4.2			

NOTES: 1 - B/L, Battery Limit Flow

Revisions		
Revision	Description	Date

CLIENT NAME
Reaction and Vent Treatment Area
Nitrobenzene - Novel Process
Dwg. 100-2001 PROJECT NUMBER

Figure 3.9 – Part 1 - PFD and Mass and Energy Balance for Novel Nitrobenzene Process Example

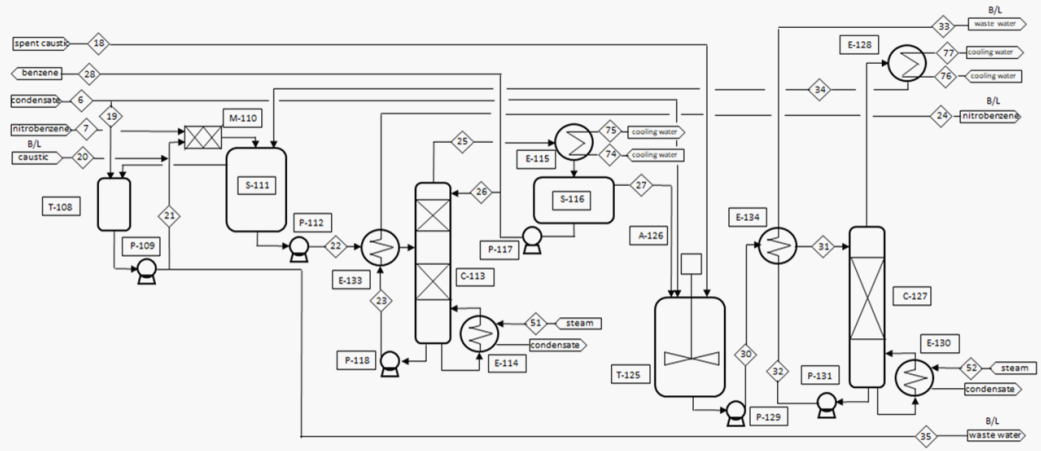

T-108	Caustic Solution Tank	P-109	Caustic Solution Pump	M-110	Static Mixer	S-111	Nitrobenzene / Caustic Solution Separator	P-112	Separator Nitrobenzene Pump	C-113	Product Distillation Column	E-114	Product Distillation Column Reboiler	E-115	Product Distillation Column Condenser	S-116	Benzene / Water Separator	P-117	Reflux Pump	P-118	Product Pump	T-125	Waste Water Tank	A-126	Waste Water Tank Agitator	C-127	Waste Water Stripper
E-128	Waste Water Stripper Condenser	P-129	Waste Water Stripper Feed Pump	E-130	Waste Water Stripper Reboiler	P-131	Waste Water Pump	E-133	Product Distillation Column Interchanger	E-134	Waste Water Interchanger															

Description		Waste Water	Cool Nitrobenzene	Purged Stripping Caustic	Waste Water For Caustic Dilution	Caustic B/L	Extraction Caustic Solution	Washed Nitrobenzene	Hot Product Nitrobenzene	Cool Product Nitrobenzene	Stripped Benzene and Water	Column Reflux	Stripped Water	Recycled Benzene	Neutralized Waste Water	Hot Neutralized Waste Water	Hot Waste Water	Cool Waste Water B/L	Recovered Organics	Strong Waste Water B/L	Steam to Product Distillation Column	Steam to Waste Water Stripper	Cooling Water to Distillation Column Condenser	Cooling Water from Distillation Column Condenser	Cooling Water to Waste Water Stripper	Cooling Water from Waste Water Stripper
Stream Number		6	7	18	19	20	21	22	23	24	25	26	27	28	30	31	32	33	34	35	51	52	74	75	76	77
Phase																										
Temperature	C	35	70	20	35	20	69	69	211	84	85	20	20	20	35	95	100	40	20	69	240	144	18	30	18	30
Pressure	Bar(a)	1	1	1	1	1	1	1	1	1	1	1	1	1	1	1	1	1	1	1	31	4	1	1	1	1
Total Flow	kg/h	5378	12830	34	37	46	11175	12922	12501	12501	619	198	24	397	5399	5399	4968	4968	431.28	422	402	429	5679	5679	14764	14764
$C_6H_5(NO_2)$	kg/h	114	12386		0.78		21	12499	12499	12499	0.05		0.05		113	113	0	0	113	0.78						
C_6H_6	kg/h		397					397	0.12	0.12	595	198		397												
HNO_3	kg/h																									
H_2SO_4	kg/h																									
H_2O	kg/h	5264	25	28	36	41	10528	25	1	1	24		24		5280	5280	4962	4962	318	398	402	429	5679	5679	14764	14764
NO	kg/h																									
$C_6H_3(NO_2)_2OH$	kg/h		21.25					0.13	0.13	0.13																
$C_6H_4(NO_2)_2$	kg/h		0.63					0.63	0.63	0.63																
NaOH	kg/h			0		5	0								0	0	0	0		0						
$C_6H_3(NO_2)_2ONa$	kg/h						626													24						
$NaNO_3/NaNO_2$	kg/h			6											6	6	6	6								
O_2	kg/h																									
N_2	kg/h																									
Density	kg/m3	992	1160	1140	992	1140	980	1165	1065	1150	2.3	880	998	880	994	960	960	992	1050	980	15.81	2.1	991	995	991	995
Viscocity	cP	0.7	1.0	2.8	0.7	2.8	0.4	1.0	0.3	0.8	0.01	0.7	1.0	0.7	0.7	0.3	0.3	0.7	1.3	0.4	0.0	0.02	1.0	0.8	1.0	0.8
Heat Capacity	kJ/kg C	4.2	1.6	3.8	4.2	3.8	4.2	1.6	2.4	1.7	1.3	1.7	4.2	1.7	4.2	4.2	4.2	4.2	3.4	4.2	2.0	1.9	4.2	4.2	4.2	4.2

NOTES: 1 - B/L, Battery Limit Flow

Revisions		
Revision	Description	Date

CLIENT NAME
Product Purification and Effluent Treatment Area
Nitrobenzene - Novel Process
Dwg. 100-2001 PROJECT NUMBER

Figure 3.9 – Part 2 - PFD and Mass and Energy Balance for Novel Nitrobenzene Process Example

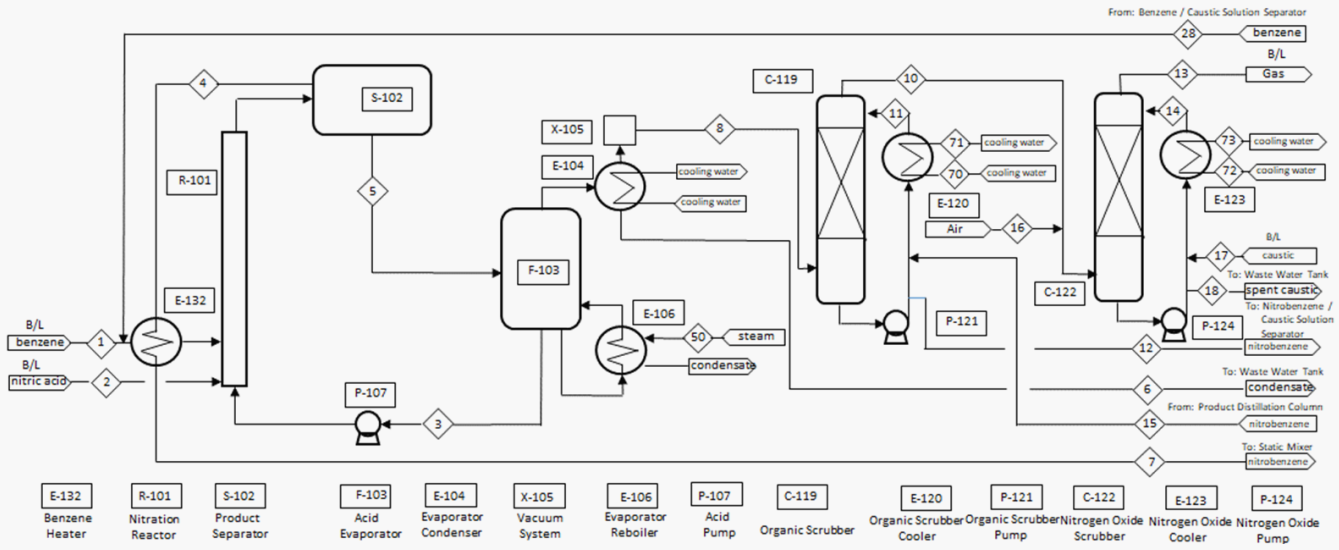

Description		Benzene from B/L	Nitric Acid from B/L	Strong Acid	Hot Nitrobenzene	Weak Acid	Waste Water	Cool Nitrobenzene	Waste Gas	Waste Gas (no organics)	Stripping Nitrobenzene	Purged Stripping Nitrobenzene	Waste Gas (no NOx)	Stripping Caustic	Make-up Stripping Nitrobenzene	Air	Scrubber Make-up Caustic	Purged Stripping Caustic	Recycled Benzene	Steam to Flash Unit	Cooling Water Feed to Org. Scrubber	Cooling Water Return from Org. Scrubber	Cooling Water Feed to NOx Scrubber	Cooling Water Return from NOx Scrubber			
Stream Number		1	2	3	4	5	6	7	8	10	11	12	13	14	15	16	17	18	28	50	70	71	72	73			
Phase																											
Temperature	C	20	20	105	135	135	35	70	35	20	20	21	20	20		20	20	20	20	144	18	19	18	19			
Pressure	Bar(a)	4	4	4	1	1	1	1	1	1	1	1	1	1	1	1	1	1	1	4	1	1	1	1			
Total Flow	kg/h	7955	9922	179113	12887	184501	5381	12887	6.32	6.22	501	100	58	500	100	61	81	91	398	880	500	500	500	500			
$C_6H_5(NO_2)$	kg/h				12408	92	92	12408	0.01	0.00	500	100	0.00		100												
C_6H_6	kg/h	7955			398			398							0.00				398								
HNO_3	kg/h		6450																								
H_2SO_4	kg/h			121797		121797																					
H_2O	kg/h		3473	57316	25	62606	5289	25	0.21	0.10	0.52	0.10	0.10	414	0.00		73.3	75.1		880	500	500	500	500			
NO	kg/h					6.11			6.11	6.11			0.01														
$C_6H_3(NO_2)_2OH$	kg/h				56.25			56.25			0.00	0.00			0.00												
$C_6H_4(NO_2)_2$	kg/h				0.63			0.63																			
NaOH	kg/h													0			8.14	0.01									
$C_6H_3(NO_2)_2ONa$	kg/h																										
$NaNO_3/NaNO_2$	kg/h													86				16									
O_2	kg/h												10.9			14.2											
N_2	kg/h												47.0			47.0											
Density	kg/m3	880	1390	1550	1110	1495	992	1160	1.2	1.2	1200	1200	1.2	1140	1180	1.2	1140	1140	880	2.1	991	991	991	991			
Viscocity	cP	0.7	2.1	1.7	0.5	1.2	0.7	1.0	0.02	0.02	2.0	2.0	0.02	2.8	1.5	0.02	2.8	2.8	0.7	0.02	1.0	1.0	1.0	1.0			
Heat Capacity	kJ/kg C	1.7	2.6	2.2	2.0	2.3	4.2	1.6	1.0	1.0	1.5	1.5	1.0	3.8	1.8	1.0	3.8	3.8	1.7	1.9	4.2	4.2	4.2	4.2			

NOTES: 1 - B/L, Battery Limit Flow

Revisions		
Revision	Description	Date

CLIENT NAME
Reaction and Vent Treatment Area
Nitrobenzene - Incumbent Process
Dwg. 100-2001 PROJECT NUMBER

Figure 3.10 – Part 1 - PFD and Mass and Energy Balance for Incumbent Nitrobenzene Process Example

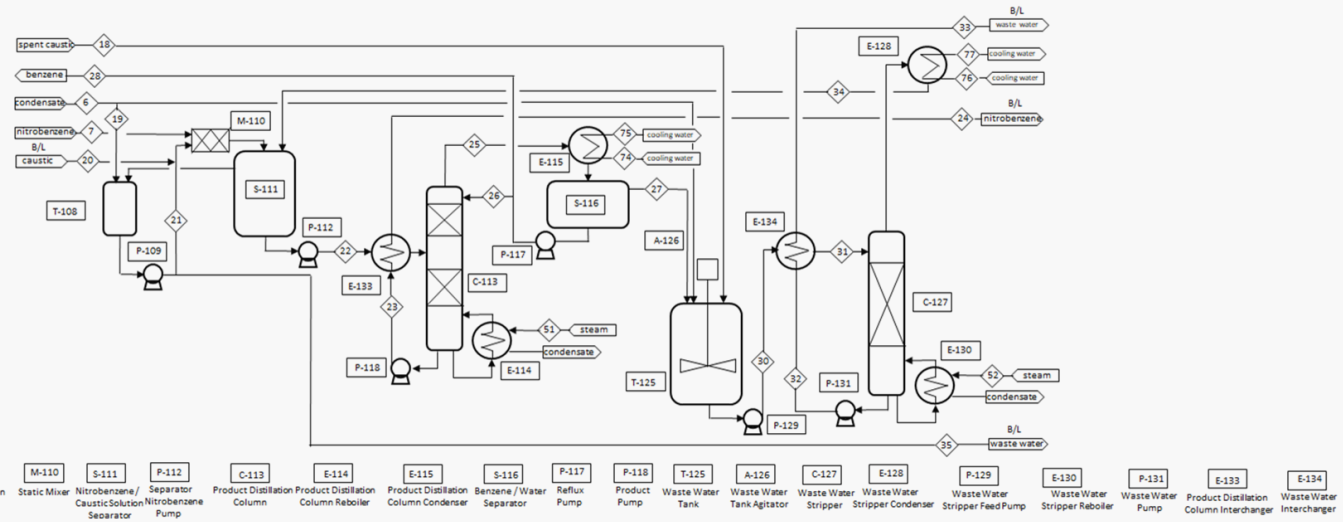

Description		Waste Water	Cool Nitrobenzene	Purged Stripping Caustic	Waste Water For Caustic Dilution	Caustic B/L	Extraction Caustic Solution	Washed Nitrobenzene	Hot Product Nitrobenzene	Cool Product Nitrobenzene	Stripped Benzene and Water	Column Reflux	Stripped Water	Recycled Benzene	Neutralized Waste Water	Hot Neutralized Waste Water	Hot Waste Water	Cool Waste Water B/L	Recovered Organics	Strong Waste Water B/L	Steam to Product Distillation Column	Steam to Waste Water Stripper	Cooling Water to Distillation Column Condenser	Cooling Water from Distillation Column Condenser	Cooling Water to Waste Water Stripper	Cooling Water from Waste Water Stripper
Stream Number		6	7	18	19	20	21	22	23	24	25	26	27	28	30	31	32	33	34	35	51	52	74	75	76	77
Phase																										
Temperature	C	35	70	20	35	20	69	69	211	84	85	20	20	20	35	95	100	40	20	69	240	144	18	30	18	30
Pressure	Bar(a)	1	1	1	1	1	1	1	1	1	1	1	1	1	1	1	1	1	1	1	31	4	1	1	1	1
Total Flow	kg/h	5381	12887	91	725	122	11335	12911	12490	12490	620	199	24	398	4771	4771	4466	4466	304.3809	1128	403	313	5688	5688	10422	10422
$C_6H_5(NO_2)$	kg/h	92	12408		12.43		125	12488	12488	12488	0.05		0.05		80	79.81	0	0	80	12.43						
C_6H_6	kg/h		398					398	0.12	0.12	596	199		398												
HNO_3	kg/h																									
H_2SO_4	kg/h																									
H_2O	kg/h	5289	25	75	713	110	10578	25	1	1	24		24		4675	4675	4451	4451	224	1053	403	313	5688	5688	10422	10422
NO	kg/h																									
$C_6H_3(NO_2)_2OH$	kg/h		56.25					0.13	0.13	0.13																
$C_6H_4(NO_2)_2$	kg/h		0.63					0.63	0.63	0.63																
NaOH	kg/h			0		12	0								0	0	0	0		0						
$C_6H_3(NO_2)_2ONa$	kg/h						631													63						
$NaNO_3/NaNO_2$	kg/h			16											16	16	16	16								
O_2	kg/h																									
N_2	kg/h																									
Density	kg/m3	992	1160	1140	992	1140	980	1165	1065	1150	2.3	880	998	880	994	960	960	992	1050	980	15.81	2.1	991	995	991	995
Viscocity	cP	0.7	1.0	2.8	0.7	2.8	0.4	1.0	0.3	0.8	0.01	0.7	1.0	0.7	0.7	0.3	0.3	0.7	1.3	0.4	0.0	0.02	1.0	0.8	1.0	0.8
Heat Capacity	kJ/kg C	4.2	1.6	3.8	4.2	3.8	4.2	1.6	2.4	1.7	1.3	1.7	4.2	1.7	4.2	4.2	4.2	4.2	3.4	4.2	2.0	1.9	4.2	4.2	4.2	4.2

NOTES: 1 - B/L, Battery Limit Flow

Revisions		
Revision	Description	Date

CLIENT NAME
Product Purification and Effluent Treatment Area
Nitrobenzene - Incumbent Process
Dwg. 100-2001 PROJECT NUMBER

Figure 3.10 – Part 2 - PFD and Mass and Energy Balance for Incumbent Nitrobenzene Process Example

3.3.3 The Preliminary Economic Analysis

Up to this point of the techno-economic review, we have developed an expanded flowsheet and a mass and energy balance model for the process being assessed. We have completed a significant part of the technical work for this phase of the development work. We are now going to dive into the economic review of the process using much of the developed technical data. There are many technical challenges still to address but we must first assess if the work ahead is worth the effort, and at this point of the analysis the decision process involves looking at the economics of the technology. In short, the economic analysis involves the following steps:

- Estimation of the process operational expenditures (OPEX)
- Estimation of the process capital expenditures (CAPEX)
- Estimation of the economic worth of the process

We are going to preliminarily estimate the cost of operating and the cost of designing and building the process plant. Using the OPEX and CAPEX estimates, we will then estimate the economic value of the process, which should allow us to decide whether or not to continue with the development work, or as a minimum on whether or not the basic technical aspects of the technology should be seriously reviewed again (i.e., more lab work before we move forward again).

When reviewing the net economic worth of a technology we can take a top-down approach or a bottoms-up approach.

In the top-down approach, the OPEX and CAPEX baseline of comparison (i.e., the OPEX and CAPEX for the incumbent technology that the novel technology is trying to displace) is directly obtained from the open literature, rather than calculated. For example, Seider (4) on chapter 16 provides CAPEX numbers and product prices for a significant number of commodity chemicals. Product prices are a good baseline that can be used to compare OPEX numbers. The reason is that product prices are typically made up of following parts: CAPEX, OPEX, and margin. Once we know the CAPEX and the plant depreciation rate, which we will discuss later, we can estimate the CAPEX part of the price. At that point, we are left with the OPEX and margin parts of the price as unknown. Margins for commodity chemicals are typically in the 5% to 10% range. For specialty or fine chemicals, the margins are more difficult to determine. But once we assume a margin, we can calculate an OPEX number per unit of product.

In the bottoms-up approach, the CAPEX and OPEX for both the incumbent technology and novel technology are calculated, as we are going to discuss in some detail in this module.

The top-down approach requires significantly less work, but it provides less certainty on the results because in many cases the approach used to estimate the open literature CAPEX and OPEX for the different processes are not disclosed.

Regardless of the approach selected, OPEX and CAPEX estimates are required, either to both technologies or only the novel technology. Therefore, let us review how OPEX and CAPEX can be estimated.

3.3.3.1 Estimating the OPEX of the Process

In the context of this module, OPEX refers to the operating expenditure associated with running a process. It may also be referred to as the Total Product Cost, which is made up of the Manufacturing Cost plus the General Expenses. The Manufacturing Cost is equal to the Variable Costs and Fixed Costs of production. The General Expense is made up of the Administrative Costs plus Distribution and Selling Costs. For more details, refer to Appendix D.

With a Process Flow Diagram (PFD) and mass and energy balance model for the process at hand, estimating a first-pass OPEX for the process is a straightforward exercise. However, as we will see below, we will need to estimate the process CAPEX first to complete the OPEX estimate (i.e., there is an iteration to complete).

Estimating the Variable Costs of production involves:

- Estimating the cost of all the feeds into the process (raw materials)
- Estimating the cost of all utilities used in the process (utilities)
- Estimating the additional cost incurred in dealing with waste generated that is not directly treated within the process (e.g., water treatment, incineration, carbon tax on CO_2 emissions, etc.)

Estimating the Fixed Costs of operation involves estimating the following:

- Operating labor costs
- Supervision
- Plant overhead

- Maintenance
- Taxes, insurance, etc.
- Financing costs (or Capital Charges)

As a first-pass approximation, which is more than adequate at the early stages of process development, the rules-of-thumbs presented in Table 3.9 can be used to estimate all of the above operating costs.

Table 3.9 – Rules-of-Thumb for Estimating a First Pass OPEX for a Process[20]

MANUFACTURING COST	**TYPICAL VALUE**
Variable Costs	
Raw Materials	Using Flowsheet and chemical costs
Utilities	Using Flowsheet and utility costs
Effluent Treatment	Using Flowsheet and treatment costs
Operating Supplies	10% of Maintenance Costs
Sub-total A	*Sum of all of the above*
Fixed Costs	**Typical Values**
Operating Labor Costs	From Labor Estimate
Supervision	20% of Operating Labor Costs
Plant Overheads	50% of Operating Labor Costs
Maintenance	5-10% of CAPEX
Taxes and Insurance	3-4% of CAPEX
Financing Costs	10% of CAPEX
Sub-total B	*Sum of all of the above*
GENERAL EXPENSES	
Sales Expenses and General Overheads	20-30% of (Sub-total A + Sub-total B)
First Pass OPEX =	Sub-total A + Sub-total B + General Expenses

[20] A more detailed approach with a more comprehensive breakdown is provided by Seider (4)

As Table 3.9 shows, costs not readily estimated using the flowsheet and mass energy balance data are functions of either the CAPEX estimate or the cost of labor. Let us first look at how we can estimate the cost of labor.

Estimating the labor cost of a process operation is not a precise task because the labor requirements vary significantly from process to process, with the size of the plant, and with the operating practices of the specific operating company. A sensible first-pass approach proposed by Seider (4) is to break a process into its functional sections. The Block Flow Diagram (BFD) of the process becomes a useful baseline document for this task because a BFD breaks a process onto its functional sections. Once the sections are defined, the data of Table 3.10 can be used for estimating the number of operators required, which is a first step at estimating the labor cost. It should be noted that most chemical and biological plants operate 24 hours a day and 7 days a week, or 168 hours per week. Since an operator works 40 hours per week, this means that 4.2 operators, practically 5 for dealing with vacations and sick time, are required to have one operator on site at all times. This means that five operating shifts are required to operate on a 24/7 basis. The amount of labor can be pro-rated from these numbers for operations not running 24/7.

*Table 3.10 Direct Operating Labor Requirements for Chemical Processing Plants**

Type of Process	Number of Operators per Process Section
Continuous Operations	
Fluids processing	½ - 1
Solids-fluid processing	1 – 2
Solids processing	2 – 3
Batch or semi-batch operation	
Fluids processing	1 – 2
Solids-fluid processing	2 – 3
Solids processing	3 – 4

*Based data from Seider (4), adjusted with the experience of the author for this module. Note that Seider recommends using this data for plants with production rates of up to 100 ton/day. However, the author has direct experience with diverse processes that shows that the data applies well to production rates of up to 1000 ton/day

The following clarification applies to labor cost. Most plants are typically shutdown once a year for maintenance. Adding unforeseen shutdowns, the typical on-line factor used for assessing most processes is approximately 8,000 hours per year, but it is important to understand that operators typically remain on site at all times, meaning that even though the plant may have on-line factor of 8,000 hours/year, operators are on site 8,760 hours/year.

In terms of hourly labor cost, which is the last piece of data that we need for estimating the labor cost of a process, Seider (4) recommends to use an hourly rate of $40. In the North American region and Western Europe, this number is still applicable to the year 2020.

Let us go back to our example to estimate the labor cost of the nitrobenzene process example we have been following.

As shown in Figure 3.7, the process of our example has five functional sections:

- Reaction
- Catalyst Regeneration
- Product Purification
- Vent Treatment
- Wastewater Treatment

This is a fluids processing plant with no solids. It is typically well instrumented, and it is not particularly complex. As a result, a 0.75 operator factor per functional section is selected from Table 3.10. Therefore, four operators (i.e., 5 functional areas * 0.75 = 3.75; round up to 4) are required at the plant at all times. Since five shifts are required to cover a 24/7 operation, a total of 20 operators are required for the whole operation.

The total annual labor cost for this process is then estimated at approximately $1.40 million (i.e., 8,760 hours of operation * 4 operators per shift * $40/h).

Provided that we have an estimate for the labor cost of the process under review, in addition to our mass and energy balance data and prices for chemicals and utilities, we should now be able

to estimate all the following OPEX cost components, which are 6 out of the 11 cost categories summarized on Table 3.9:

- Raw materials (i.e., feeds and chemicals)
- Utilities
- Effluent Treatment
- Operating Labor Cost
- Supervision
- Plant Overheads

Assessing the remaining OPEX cost components requires an estimate of the process CAPEX, which will be covered in the next section.

Estimating the costs of feeds and chemicals entering the process involves getting relevant chemical pricing data. In section 2.1.3.1, we covered how to gather chemical data. In regards to utility costs, there is much open literature available providing generic costs. At this stage of the development project, generic data is sufficient to continue the analysis. However, actual cost data will be required in the later stages of our economic evaluation of the project. Table 3.11 provides a list of generic utility costs, which are valid for the North American region and for the year 2017, although they have not changed much to 2020 (source: amended from Seider (4) based on the experience from the author of these notes).

Table 3.11 – Typical Industrial Utility Costs

Utility	Typical Cost	Utility	Typical Cost
30 barg steam	$20/ton	Electrical Power	$0.12/kWh
10 barg steam	$17/ton	Refrigerant (-10 ºC)	$6.5/GJ
3 barg steam	$13/ton	Refrigerant (- 70 ºC)	$25/GJ
Cooling Water	$0.05/m^3	Natural Gas	$0.25/SCM
Process Water	$0.4/m^3	Compressed Air	$0.02/SCM
Boiler Feed Water	$0.7/m^3		

Important Clarification: As previously discussed, the mass and energy balance for the process, which should have been developed by now, provides raw material and utilities consumption data. In the case of utilities, the mass and energy balance model also typically estimates data for services such as cooling water and steam. However, electrical consumption, which is also a common utility and a significant operating cost for some processes, is not typically estimated by the mass and energy balance model. Estimating a first-pass electrical power consumption for a process involves summarizing and estimating the main individual power consumption sources, which involves the preliminary sizing of the equipment, an activity that would not have been completed at this stage of the process development work. However, we will need to complete the preliminary sizing of the equipment to estimate the process CAPEX, and it is then that we should come back to estimate the electrical power cost of the process. Leaving the electrical power consumption out for now, we will now go back to our working example to finish estimating a few additional cost categories for the OPEX outlined above.

We will start by estimating the raw material and utility costs for the process. The first step in estimating these costs involves the preparation of a "battery limit summary" for the process. A battery limit summary is simply a summary of the streams coming in and out of the overall process. Tables 3.12 shows a simple battery limit summary for the processes covered under Figures 3.8 and 3.9.

Table 3.12 – Battery Limit Summary for the Process

Streams In			
STREAM NUMBER	*DESCRIPTION*	*Novel Technology*	*Incumbent Technology*
1	Benzene Feed to Reactor	7,940 kg/h	7,955 kg/h
2	Nitric Acid Feed to Reactor	9,873 kg/h	9,922 kg/h
17, 20	Caustic to Process (10 wt%)	77 kg/h	203 kg/h
70,72,74,76	Cooling Water	21,443 kg/h	17,110 kg/h
50,51,52	Steam	1,711 kg/h	1,614 kg/h
16	Air	23 kg/h	61 kg/h
Streams Out			
STREAM NUMBER	*DESCRIPTION*	*Novel Technology*	*Incumbent technology*
13	Waste Gas (requiring further treatment)	31 kg/h	81 kg/h
24	Final Nitrobenzene Product	12,501 kg/h	12,490 kg/h
33	Waste Water (requiring further biological treatment)	4,968 kg/h	4,466 kg/h
35	Strong Waste Water (requiring incineration)	422 kg/h	1,128 kg/h
71,73,75,77	Cooling Water	21,443 kg/h	17,110 kg/h
	Condensate	1,711 kg/h	1,614 kg/h

We are also going to need some of the relevant cost data presented in Module 2:

- Cost of Benzene: $800/ton
- Cost of Nitric Acid (100% basis): $242/ton

The current bulk cost of caustic is approximately $425/ton (100% basis), year 2020.

By multiplying the raw materials and utilities consumptions shown in Table 3.12 by the unit prices shown above, in an annualized basis, we come up with the Raw Material and Utilities costs forming part of the OPEX estimate. Table 3.13 summarizes these costs.

*Table 3.13 – Cost Summary of Raw Materials and Utilities**

Raw Materials and Utilities Costs (in $million)			
STREAM NUMBER	*DESCRIPTION*	*Novel Technology*	*Incumbent Technology*
1	Benzene Feed to Reactor	$50.82	$50.91
2	Nitric Acid Feed to Reactor	$12.42	$12.49
17, 20	Caustic to Process (10 wt%)	$0.03	$0.07
	Sub-total (Raw Materials) =	***$63.27***	***$63.47***
70,72,74,76	Cooling Water	< $0.01	< $0.01
50,51,52	Steam**	$0.20	$0.19
	Sub-total (Utilities) =	***$0.20***	***$0.19***

*Based on operation at 8,000 hours per year
** 15 barg steam assumed

For the cost of treating the waste, we will assume the following cost data, presented in Module 2:

- Cost of Wastewater Treatment: $3/ton + $0.3/kg of organic [treatment of stream 33]

- Cost of Incinerating Strong (toxic) Wastewater: $300-$800 per ton [treatment of stream 35]
- Cost of Flue Gas Treatment (thermal oxidizer): $400-$3,000 per ton of organic [treatment of stream 13]

We will assume that the process plant will form part of a large chemical complex, which is typical. Large chemical complexes have centralized effluent treatment facilities which handle the multiple plants present at the larger site (i.e., economy of scale savings). This means that for the treatment costs of the waste streams, we would be on the lower end of the ranges provided above.

By multiplying the waste effluent flow rates generated, as shown in Table 3.12, by the lower end of the cost range shown above, in an annualized basis, we come up with the waste effluent treatment costs forming part of the OPEX estimate. Table 3.14 summarizes these costs.

Table 3.14 – Cost Summary of Waste Effluent Treatment

Waste Treatment Costs (in $million)			
STREAM NUMBER	*DESCRIPTION*	*Novel Technology*	*Incumbent Technology*
13	Waste Gas (requiring further treatment)	<$0.01	<$0.01
33	Waste Water (requiring further biological treatment)	$0.11	$0.11
35	Strong Waste Water (requiring incineration)	$1.01	$2.71
	Sub-total (Waste Effluent Treatment) =	***$1.12***	***$2.82***

By now, we should have estimates for the costs related to Raw Materials consumption, Utilities consumption, Effluent Treatment, and Operating Labor. To estimate the Supervision and Plant Overhead costs, which form part of the OPEX estimate, we will use the rule-of-thumbs presented in Table 3.9, which relates those costs to the Operating Labor cost. Table 3.15 presents a summary of the partial OPEX estimate up to this point, which excludes those other operating costs which are estimated as a function of the CAPEX cost. Those other costs, which we will come back to, include:

- Maintenance
- Taxes, insurance, etc.

- Financing costs (or Capital Charges)
- Sales expenses and general overheads

Table 3.15 – Partial Annual OPEX Estimate for the Novel and Incumbent Technologies

Novel Technology OPEX Costs		**Incumbent Technology OPEX Costs**	
Production Rate = 100,000 tons/year of Nitrobenzene			
Raw Materials	$63.27 million	Raw Materials	$63.47 million
Utilities	$0.20 million	Utilities	$0.19 million
Effluent Treatment	$1.12 million	Effluent Treatment	$2.82 million
Operating Labor Cost	$1.40 million	Operating Labor Cost	$1.40 million
Supervision	$0.28 million	Supervision	$0.20 million
Plant Overheads	$0.70 million	Plant Overheads	$0.70 million
Partial Annual OPEX	$66.97 million	Partial OPEX	$68.78 million

We will complete the OPEX estimates once we finish estimating the first pass CAPEX for the processes.

3.3.3.2 Estimating the CAPEX of the Process

In the context of the sections of this module, CAPEX refers to the capital expense associated with designing, building, and starting up a process plant. In here, we refer to CAPEX as the Total Capital Investment (TCI), which is a combination of the Fixed Capital Investment (FCI) plus the Working Capital (WC). For more details, refer to Appendix D.

The typical cost categories forming part of the FCI of the CAPEX estimate include:

- Direct Costs
  - Equipment
  - Installation
  - Instrumentation
  - Piping

- Electrical
- Building and Services
- Yard Improvements
- Service Facilities
- Land

- Indirect Plant Costs
  - Engineering and Supervision
  - Construction Expenses
  - Contractor Fee
  - Contingency

All above costs could be obtained requesting quotes to service and equipment suppliers. However, a lot more engineering work is required before sufficient details are worked out for suppliers to be able to do their estimation work. Fortunately, several different shortcut methods have been proposed by others for estimating the TCI of a process plant, each having a different degree of accuracy. Some of these methods are presented in Appendix D, section D-2.5. Other methods are presented by Seider (4) in section 16. However, at this stage of the development work, the technology is likely at a Technology Readiness Level (TRL) of approximately 3 at best, which means that there is much de-risking work still to complete, and therefore much can eventually change on the overall process. As a result, the use of over-complex estimation methods that can improve the estimation accuracy of the CAPEX of a process at a low TRL is not recommended. For the scientists out there, the argument is this… does it make sense to spend much effort in narrowing the error band of a data point that may be several standard deviations from the mean? Ultimately, as the technology moves closer to its implementation, proper quotes are typically obtained to accurately estimate the TCI of the novel process.

For estimating the first-pass CAPEX of a process plant, the following methodology is suggested. The simplest approach is based on a factor method developed by Lang (24) who correlated cost data for different classes of plant. The method utilizes factors that are multiplied by the delivered equipment cost to yield either the fixed capital investment or the total capital investment of a process plant. Note that the delivered equipment cost is typically 1.1 to 1.25 times the purchased equipment cost or free on board (FOB) cost. Table 3.16 shows a breakdown of relevant factors for different types of processes as presented by Peters (25).

Table 3.16 – CAPEX Lang Factors for Different Types of Processes by Peters et al. (2003)

	Solid Processing	***Solid / Fluid Processing***	***Fluid Processing***
Direct Costs			
Delivered Equipment	100	100	100
Installation	45	39	47
Instrumentation	9	13	18
Piping	16	31	66
Electrical	10	10	11
Building and Services	25	29	18
Yard Improvements	13	10	10
Service Facilities	40	55	70
Land	6	6	6
Total Direct Plant Costs	**264**	**293**	**346**
Indirect Costs			
Engineering and Supervision	33	32	33
Construction Expenses	30	34	41
Total Direct + Indirect Plant Costs	**336**	**359**	**420**
Contractors Fee	17	18	21
Contingency (10%)	34	36	42
Fixed Capital Investment	**387**	**413**	**483**
Working Capital	68	74	86
TOTAL CAPITAL INVESTMENT	**455**	**487**	**569**

To complete our first-pass CAPEX estimate based on the proposed methodology, we must first estimate the delivered cost of the equipment for the whole process. For that task, we must first generate an equipment list, which is a straightforward exercise provided that the process flowsheet has been completed. Then, we need to size the equipment and define the appropriate materials of construction. Next, one could opt to get equipment quotes from suppliers to determine their costs, which is the most accurate approach, or use estimates as discussed below. Learning how to design and size unit operations (e.g., reactors, heat exchangers, pumps, etc.) is outside the scope of this module. These activities are covered in undergraduate engineering courses. Selecting materials of construction is too process specific, so it is also beyond the scope of these notes. Therefore, we will move to the last part, estimating equipment costs.

If obtaining quotes is not an option, we can then proceed to use estimates for the cost of equipment, which are typically based on published data. Much cost data for process equipment is available in the open literature. The data is typically provided for set of specifications and for a specific year. To bring cost data to date, it is common to use cost indices. Common cost indices include the *Marshall and Swift Index* or the *Chemical Engineering Plant Cost index*, which mainly apply to North America and Europe. Figure 3.11 presents the Chemical Engineering Plant Cost Index for the year range from 1996 to 2019. To estimate the cost of a specific piece of equipment based on past pricing, simply multiply the old price by the ratio of the index factors, today versus the year of the old price.

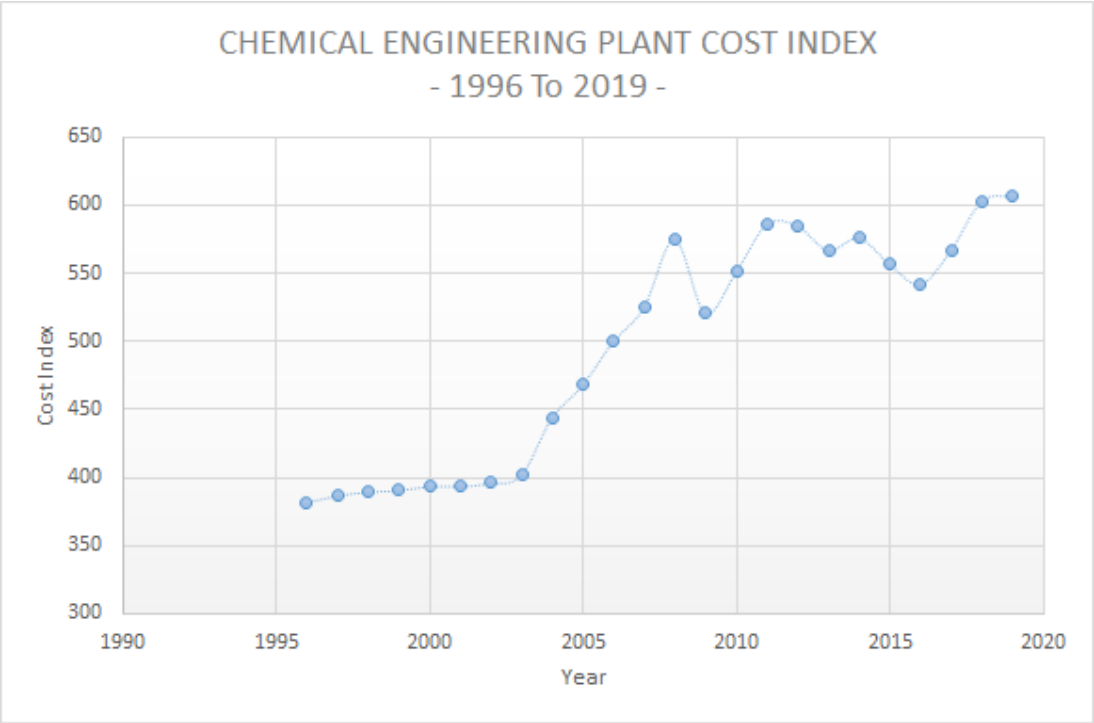

Figure 3.11 – Chemical Engineering Plant Cost Index

Correlations and equations to estimate the cost of a wide range of process equipment is presented in Appendix C. These correlations and equations provide equipment cost data for either the year 1998 or 2017, as indicated, when the CE Plant Cost Indexes were 382 and 567 respectively. Cost correction factors are also provided for different materials of constructions or different specifications. It is an extensive set of equations and correlations. Table 3.17 presents the equipment covered in Appendix C.

Table 3.17 – List of Equipment Covered by Equipment Cost Estimates – Appendix C

Equipment	Equipment	Equipment
Pressure Vessels	Electric Motors	*Screens*
Non-Pressure Vessels	Axial Flow and Centrifugal Fans	Vibrating grizzlies
Storage Tanks	Centrifugal and Straight-lob Rotary Blower	Vibrating screens, 1 deck
Open	Gas Compressors	Vibrating screens, 2 decks
Cone roof	*Other Drives (than electric motors)*	Vibrating screens, 3 decks
Floating roof	Steam turbines (noncondensing)	Bucket Elevator
Spherical, 0-30 psig	Steam turbines (condensing)	*Conveyors*
Spherical, 30-200 psig	Gas turbines	Belt
Gas holders	Internal combustion engines	Screw
Low Pressure Valve Tray Column	*Agitators*	Vibratory
High Pressure Valve Tray Column	Propeller, open tank	Pneumatic Conveyors
Low Pressure Sieve Tray Column	Propeller, closed vessel	*Solid Handling Systems*
High Pressure Sieve Tray Column	Turbine, open tank	Bins
Low Pressure Packed Column	Turbine, closed vessel	Belt feeders
High Pressure Packed Column	*Power Recovery Turbines*	Screw feeders
Random Packed Material	Gas expanders (pressure discharge)	Vibratory feeders
Autoclaves	Gas expanders (vacuum discharge)	*Size Enlargement*
Steel	Liquid Expanders	Disk agglomerators
Stainless Steel	*Centrifuges*	Drum agglomerators
Glass lined	Batch top-drive vertical basket	Pellet mills
Shell and Tube Heat Exchangers	Batch bottom-drive vertical basket	Pug Mill Extruder
Double Pipe Heat Exchangers	Vertical auto-batch	Screw extruders
Air Coolers	Horizontal auto-batch	Roll-type presses
Air-cooled fin-fan	Continuous reciprocating pusher	Tableting presses
Plate and frame	Continuous scroll solid bowl	*Size Reduction*
Spiral Plate	Hydrocyclones	Gyratory crushers
Spiral Tube	*Membrane Separation*	Jaw crushers
Fire Heater Furnace	Reverse Osmosis, seawater	Cone crushers
Steam Boiler	Reverse Osmosis, brackish water	Hammer mills
Fire Heaters for Specific Purposes	Gas permeation	Ball mills
Reformer	Jet mills	Jet mills
Pyrolysis	Ultrafiltration	*Expressions*
Hot Water	*Solid Liquid Separator*	Screw presses
Molten Salt and Mineral Oils	Thickener, steel	Roll presses
Cooling Towers	Thickener, concrete	*Mixer for powder, paste, polymer, dough*
Evaporators	Clarifier, steel	Kneaders, tilting double arm
Horizontal Tube	Clarifier, concrete	Kneaders, sigma double arm
Long Tube Vertical (falling film)	Plate and frame filter	Muller
Forced Circulation	Pressure leaf filter	Ribbon
Falling Film	Rotary-drum vacuum filter	Tumblers, double cone
Continuous Evaporative	Rotary pan	Tumblers, twin shell
Forced circulation	Wet Classifiers	*Vacuum Systems*
Draft-tube baffled	*Dust Collectors*	One-stage jet ejector
Batch Evaporative	Bag filters	Liquid-ring pumps
Crystallizers	Cyclones	Three-stage lob
Dryers	Electrostatic precipitators	Three-stage claws
Batch Tray	Venturi scrubbers	Screw compressors
Direct-heat rotary	Wet Classifiers	*Adsorption Materials*
Indirect-heat steam-tube rotary	*Dust Collectors*	Molecular sieves
Spray	Bag filters	Activated alumina
Centrifugal Pumps	Cyclones	Activated carbon
Gear Pumps	Electrostatic precipitators	Silica gel
Reciprocating Pumps	Venturi scrubbers	

Through the sizing of the equipment, which is required to determine the cost of the equipment, we are assuming that traditional equipment, such as those summarized in Table 3.17, can be used, and that they will be scalable based on the available data. It also important to point out that at this stage of development, mainly heuristics are used to size the equipment for simplicity. All heuristics introduce some amount of risk to the project. We should also note that there are scale-up issues and challenges to still consider. We will introduce those in the next module.

For those having access to modeling tools such as ASPEN Plus or Hysys Plus, either of these tools can be used to size and cost the equipment.

Let us now go back to our nitrobenzene process example to estimate the CAPEX of the novel and incumbent processes we have been following.

The equipment list for both the novel nitrobenzene process and the incumbent technology is presented in Table 3.18. It is extracted from the PFD of Figures 3.8. In our particular case, both technologies have the same equipment, although not necessarily the same size of equipment.

Table 3.18 – Basic Equipment List - Both the Novel and Incumbent Technologies

Equipment Number	Equipment Description	Equipment Number	Equipment Description
R-101	Nitration Reactor	S-111	Nitrobenzene/Caustic Sol. Sep.
E-132	Benzene Heater	P-112	Separator Nitrobenzene Pump
S-102	Product Separator	C-113	Product Distillation Column
F-103	Acid Evaporator	E-114	Product Distillation Col. Reboiler
E-104	Evaporator Condenser	E-115	Product Distillation Col. Condenser
X-105	Vacuum System	S-116	Benzene/Water Separator
E-106	Evaporator Reboiler	P-117	Reflux Pump
P-107	Acid Pump	P-118	Product Pump
C-119	Organic Scrubber	T-125	Waste Water Tank
E-120	Organic Scrubber Cooler	A-126	Waste Water Tank Agitator
P-121	Organic Scrubber Pump	C-127	Waste Water Stripper
C-122	Nitrogen Oxide Scrubber	E-128	Waste Water Stripper Condenser
E-123	Nitrogen Oxide Cooler	P-129	Waste Water Stripper Feed Pump
P-124	Nitrogen Oxide Pump	E-130	Waste Water Stripper Reboiler
T-108	Caustic Solution Tank	P-131	Waste Water Pump
P-109	Caustic Solution Pump	E-133	Product Distillation Col. Interch.
M-110	Static Mixer	E-134	Waste Water Interchanger

The equipment sizes and materials of construction for the novel and incumbent technologies are summarized in Table 3.19. The detailed calculations involved in sizing the equipment are not included. However, some key assumptions that were made to size the equipment are covered in Table 3.20. These are assumptions that present process risks that must be eventually assessed.

Table 3.19 – Equipment Sizing for Both the Novel and Incumbent Nitrobenzene Production Technologies

Equipment Number	Equipment Description	Equipment Size And Material of Construction (novel technology)	Equipment Size And Material of Construction (incumbent technology)
R-101	Nitration Reactor	2.21 m^3 glass-lined steel	2.29 m^3 glass-lined steel
E-132	Benzene Heater	7.54 m^2 stainless steel	7.57 m^2 stainless steel
S-102	Product Separator	27.33 m^3 glass-lined steel	22.50 m^3 glass-lined steel
F-103	Acid Evaporator	31.44 m^3 glass-lined steel	31.44 m^3 glass-lined steel
E-104	Evaporator Condenser	135 m^2 stainless/carbon steel	135 m^2 stainless/carbon steel
X-105	Vacuum System	2-stage stainless steel	2-stage stainless steel
E-106	Evaporator Reboiler	0.48 m^2 tantalum/carbon steel	0.48 m^2 tantalum/carbon steel
P-107	Acid Pump	68 kW Teflon-lined steel	56 kW Teflon-lined steel
C-119	Organic Scrubber	0.15 m^3 stainless steel	0.40 m^3 stainless steel
E-120	Organic Scrubber Cooler	0.25 m^2 stainless/carbon steel	0.25 m^2 stainless/carbon steel
P-121	Organic Scrubber Pump	0.3 kW stainless steel	0.8 kW stainless steel
C-122	Nitrogen Oxide Scrubber	4.00 m^3 stainless steel	10.60 m^3 stainless steel
E-123	Nitrogen Oxide Cooler	2.95 m^2 stainless/carbon steel	7.80 m^2 stainless/carbon steel
P-124	Nitrogen Oxide Pump	0.3 kW stainless steel	0.8 kW stainless steel
P-109	Caustic Solution Pump	0.6 kW stainless steel	0.6 kW stainless steel

M-110	Static Mixer	small	Small
S-111	Nitrobenzene/Caustic Sol. Sep.	7.4 m^3 stainless steel	7.5 m^3 stainless steel
P-112	Separator Nitrobenzene Pump	1.1 kW stainless steel	1.1 kW stainless steel
C-113	Product Distillation Column	10.6 m^3 stainless steel	10.6 m^3 stainless steel
E-114	Product Distillation Col. Reboiler	6.73 m^2 stainless/carbon steel	6.73 m^2 stainless/carbon steel
E-115	Product Distillation Col. Condenser	5.09 m^2 stainless/carbon steel	5.09 m^2 stainless/carbon steel
S-116	Benzene/Water Separator	0.23 m^3 stainless steel	0.23 m^3 stainless steel
P-117	Reflux Pump	0.3 kW stainless steel	0.3 kW stainless steel
P-118	Product Pump	1.2 kW stainless steel	1.2 kW stainless steel
T-125	Waste Water Tank	10.92 m^3 stainless steel	9.64 m^3 stainless steel
A-126	Waste Water Tank Agitator	0.9 kW stainless steel	0.9 kW stainless steel
C-127	Waste Water Stripper	3.40 m^3 stainless steel	3.05 m^3 stainless steel
E-128	Waste Water Stripper Condenser	1.81 m^2 stainless/carbon steel	1.28 m^2 stainless/carbon steel
P-129	Waste Water Stripper Feed Pump	0.5 kW stainless steel	0.5 kW stainless steel
E-130	Waste Water Stripper Reboiler	1.47 m^2 stainless/carbon steel	1.07 m^2 stainless/carbon steel
P-131	Waste Water Pump	0.3 kW stainless steel	0.3 kW stainless steel
E-133	Product Distillation Col. Interch.	16.34 m^2 stainless steel	16.33 m^2 stainless steel
E-134	Waste Water Interchanger	81.72 m^2 stainless steel	73.47 m^2 stainless steel

Table 3.20 – Key Assumptions Made in the Sizing of the Equipment that Introduce Process Risk

Reaction Area	
	The reaction rate doubles every 10 ºC of average temperature increase. This is a widely accepted rule of thumb. Reaction kinetic data is not available in the open literature. (The average reaction temperature between the novel process and the incumbent technology is different)
	The separation of the nitrobenzene and the acid in the Product Separator (S-102) is complete (i.e., at the exit of the unit, insignificant entrainment of one phase on the other) occurs. The separation residence time requirement is 5 minutes (based on experience)
Product Purification	
	The partition coefficients for the nitrophenol between the nitrobenzene and caustic solutions are high enough that one stage of washing is sufficient to remove the nitropenols from the nitrobenzene below 10 ppm (more than one washing stage may be required)
	The separation between the nitrobenzene and the caustic solution in Nitrobenzene/Caustic Solution Separator (S-111) is very good, leading to insignificant caustic leaving with the product nitrobenzene, which could present a product quality issue if it is not the case. The assumed separation residence time is 20 minutes (based on experience)
Effluent Treatment	
	The separation between the benzene and the water in Benzene/Water Separator (S-116) is very good, with an assumed separation residence time of 20 minutes (based on experience)

At this point of the TEA analysis, we have a list of the equipment involved in the process, the equipment sizes, and the materials of construction. With this data, we can now proceed to estimate the Purchased Equipment Cost for both the novel process and the incumbent process using the cost estimate correlations presented in Appendix C. Table 3.21 presents a summary of the estimated Purchased Equipment costs.

Table 3.21 – Summary of Estimated Purchased Equipment Costs

Equipment Number	Equipment Description	Purchased Equipment Cost for Novel Tech. (US$)	Purchased Equipment Cost for Incum. Tech. (US$)	Source of Cost Data (from Appendix C)
R-101	Nitration Reactor	69,300	70,700	Table C-17
E-132	Benzene Heater	56,700	56,700	Figure C-9 + Equation C-1
S-102	Product Separator	270,000	243,000	Table C-17
F-103	Acid Evaporator	291,000	291,000	Table C-17
E-104	Evaporator Condenser	87,300	87,300	Figure C-9 + Equation C-1
X-105	Vacuum System	2,500	3,700	Table C-17 + Table C-18
E-106	Evaporator Reboiler	86,400	86,400	Figure C-9 + Equation C-1
P-107	Acid Pump	25,500	24,300	Figure C-14 + Table C-9
C-119	Organic Scrubber	14,300	22,400	Figure C-1 + Table C-3
E-120	Organic Scrubber Cooler	3,400	3,400	Figure C-10 + Table C-7
P-121	Organic Scrubber Pump	8,500	8,500	Figure C-14 + Table C-9
C-122	Nitrogen Oxide Scrubber	85,400	138,300	Figure C-1 + Table C-3
E-123	Nitrogen Oxide Cooler	5,000	6,000	Figure C-10 + Table C-7
P-124	Nitrogen Oxide Pump	8,500	8,500	Figure C-14 + Table C-9
T-108	Caustic Solution Tank	17,900	19,000	Figure C-2 + Table C-2
P-109	Caustic Solution Pump	8,500	8,500	Figure C-14 + Table C-9
M-110	Static Mixer	Insignificant	Insignificant	
S-111	Nitroben./Caustic Sol. Sep.	33,600	33,600	Figure C-2 + Table C-2
P-112	Separator Nitroben. Pump	9,200	9,200	Figure C-14 + Table C-9
C-113	Product Distillation Column	134,600	134,600	Figure C-1 + Table C-2
E-114	Product Dist. Col. Reboiler	17,900	17,900	Figure C-9 + Equation C-1

S-116	Benzene/Water Separator	12,800	12,800	Figure C-1 + Table C-2
P-117	Reflux Pump	8,500	8,500	Figure C-14 + Table C-9
P-118	Product Pump	8,500	8,500	Figure C-14 + Table C-9
T-125	Waste Water Tank	42,600	40,300	Figure C-2 + Table C-2
A-126	Waste Water Tank Agitator	8,300	8,300	Table C-17 + Table C-19
C-127	Waste Water Stripper	75,200	68,500	Figure C-1 + Table C-2
E-128	Waste Water Strip. Cond.	4,900	4,500	Figure C-10 + Table C-7
P-129	W.W. Strip. Feed Pump	8,500	8,500	Figure C-14 + Table C-9
E-130	Waste Water Stripper Reb.	4,700	4,300	Figure C-10 + Table C-7
P-131	Waste Water Pump	8,500	8,500	Figure C-14 + Table C-9
E-133	Prod. Dist. Col. Interch.	44,800	44,800	Figure C-10 + Table C-7
E-134	Waste Water Interchanger	62,700	58,300	Figure C-10 + Table C-7
TOTALS =		1,541,100	1,564,400	

As previously mentioned, the Delivered Equipment cost, which are used in the CAPEX Lang factor approach estimate, are typically 1.1 to 1.25 times the Purchased Equipment cost. We are going to assume the average of those two values to estimate the Delivered Equipment cost for both the novel and incumbent processes. Next, we can proceed to use the factor of Table 3.16 to estimate the numbers for the different CAPEX categories. Table 3.22 presents the final CAPEX numbers, which are $10.31 million and $10.39 million for the novel and incumbent processes respectively.

Table 3.22 – CAPEX Estimates for the Novel and Incumbent Technologies

	Novel Process ($ million)	***Incumbent Process ($million)***
Direct Costs		
Delivered Equipment	1.81	1.83
Installation	0.85	0.86
Instrumentation	0.33	0.33
Piping	1.19	1.21
Electrical	0.20	0.20
Building and Services	0.33	0.33
Yard Improvements	0.18	0.18
Service Facilities	1.27	1.28
Land	0.11	0.11
Total Direct Plant Costs	**6.27**	**6.33**
Indirect Costs		
Engineering and Supervision	0.60	0.60
Construction Expenses	0.74	0.75
Total Direct + Indirect Plant Costs	**7.61**	**7.68**
Contractors Fee	0.38	0.38
Contingency (10%)	0.76	0.76
Fixed Capital Investment	**8.75**	**8.82**
Working Capital	1.55	1.57
TOTAL CAPITAL INVESTMENT	**10.31**	**10.39**

With the CAPEX estimated, we can now proceed to complete the OPEX estimate for the processes by calculating the last few operating costs that, as shown in Table 3.9, are linked to the CAPEX estimated numbers, mainly maintenance, taxes and insurance, financing costs, and operating supplies. Table 3.23 presents the overall OPEX numbers for both the novel and incumbent processes, which are $86.49 million/year and $88.80 million/year for the novel and incumbent processes respectively.

Table 3.23 – OPEX Estimates for the Novel and Incumbent Technologies

	Novel Process ($million/year)	***Incumbent Process ($million/year)***
Variable Costs		
Raw Materials	63.27	63.47
Utilities	0.20	0.19
Effluent Treatment	1.12	2.82
Operating Supplies	0.08	0.08
Sub-total A	*64.67*	*66.56*
Fixed Costs		
Operating Labor Costs	1.40	1.40
Supervision	0.28	0.20
Plant Overheads	0.70	0.70
Maintenance	0.77	0.78
Taxes and Insurance	0.36	0.36
Financing Costs	1.03	1.04
Sub-total B	*4.54*	*4.48*
Sales Expenses and General Overheads	*17.28*	*17.76*
First Pass OPEX =	**86.49**	**88.80**

In the next two sections, we are going to integrate all generated cost numbers and technical data (i.e., identified process risks) to complete the first-pass economic analysis and technical risk assessment of the novel process technology, which would take us to the end of the TEA review.

3.3.3.3 Economic Analysis

We are now ready to look at a more complete first-pass economic analysis of a novel process technology.

The ultimate approach to the economic analysis depends upon the goals and objectives of the TEA, and these goals and objectives can be very diverse in nature. However, the economic analysis is trying to answer economic questions about the process. It does not deal with technical, environmental or societal issues that the TEA may want to address. In general, the economic analysis tries to answer two main questions:

- Is the process profitable?
- How does the economics of the process compare against the baseline of comparison?

These questions can be answered using a number of different economic methods, some of which are discussed in Appendix D. However, the most used method in industry involves the estimation of an internal rate of return (IRR) for the project, estimated based on the net present values (NPV) of costs and revenues being equal, which is then compared against the stakeholders' (e.g., investors) minimum rate of return (MRR) expectation for the investment. It all starts with the OPEX and CAPEX numbers.

In the previous sections, a methodology for estimating the OPEX and CAPEX of a process, or process modification, was presented. However, being able to estimate the capital and operating costs of a process, as we have done so far, does not yet allow us to make an effective economic decision about the process because we do not yet know how to combine the one time capital expenditure with the continuous operating costs. This point is illustrated by the following example:

A boiler is to be used to raise process steam - should we fire it with oil or coal given the following costs?

- Oil Fired: CAPEX = $100,000 / OPEX = $325,000
- Coal Fired: CAPEX = $400,000 / OPEX = $250,000

The question is - does the cheaper fuel cost for coal offset the higher initial capital cost of the coal-fired boiler? Note that in the case of the oil-fired unit, the $300,000 capital savings could be invested, producing earnings which could make the oil-fired option more attractive.

The above example leads us into two important economic concepts that we need to understand first. The first concept is the idea of cash flow, which is the cumulative amount of money inflow or outflow from a company or a project, which includes for example capital expenses and annual operation costs. The second concept is that cash flow has a time axis (i.e., cash comes in and out at different times) and since money has a "time value" we cannot make simple comparisons among cash flows (in or out) that occur at different times. The "time value" of money can be explained as follows, suppose we need $1000 in 5 years to pay for the replacement of a pump. We can place some lesser amount in an investment now so that this amount plus the interest earned in the next five years ensures that we have the needed $1000 five years after.

So how do we combine CAPEX, OPEX, and the concepts of cash flow and the time value of money? Let us look at the Present Value Analysis.

Present Value Analysis

Let us first define what Present Value (PV) is. PV is a financial calculation that measures the worth of a future amount of money or stream of payments in today's dollars adjusted for interest and inflation. In other words, the PV calculation is used to compare the buying power of one future amount against the purchasing power of another amount today.

The present worth value of a single benefit or cost can be estimated using equation 3.1. Its derivation is presented in Appendix D.

$$P = \frac{S}{(1+i)^n} \qquad 3.1$$

Where, P: present value

S: is the amount of cash inflow or outflow in year n

n: year

i; interest rate

For a series of constant streams of payments, e.g. - equal annuities (e.g., OPEX or annual revenue, assuming they are always the same), the present worth value of those streams of constant payments can be estimated using equation 3.2. Its derivation is also presented in Appendix D.

$$P = \frac{R \times [(1+i)^n - 1]}{[i \times (1+i)^n]} \qquad 3.2$$

Where, R: value of the annuity

Using the above equations, we can now estimate and compare the present worth of cash *inflows* from the project, for example revenues, against the present worth of the cash *outflows*, for example OPEX. The difference is the Net Present Value (NPV) of the project and, obviously, a positive value is desired.

NPV = PV of Benefits – PV of Costs

As it is quickly obvious, the analysis cannot be completed without defining an interest rate and a number of years to use in the analysis. Let us start by discussing the number of years to use in the analysis.

The number of years to use in the analysis is typically the depreciation period for the project. For a chemical or biological process, this is the depreciation period for the plant. Seider (4) presents the following typical depreciation rates for process plants:

- Petroleum and natural gas equipment – 7 years
- Petroleum refining – 10 years
- Pipeline and nuclear power production – 15 years
- Power production equipment and water utilities – 20 years

Let us now discuss the interest rate to use in the analysis, which brings us to the calculation of the internal rate of return (IRR) for the project. In the economic analysis discussed here, which is very commonly used in industry, the approach is to estimate an interest rate that makes the PV

of benefits equal to the PV of costs, or an interest rate where NPV is zero. The calculated interest rate is defined as the IRR for the project. So in this analysis rather than inputting an interest rate in the above equations, an interest rate is calculated using the above equations.

The last step of the proposed economic analysis methodology is to compare the calculated IRR against the project stakeholders' minimum rate of return (MRR) expectation. As discussed in module 2, for many chemical and biological plants, investors expect to get their investment back in 7 to 9 years for new green-field projects and 2 to 3 years for expanded brown-field projects. These are MRRs of 8-10% for green-field projects and 26-40% for brown-field projects.

Let us now go back to our nitrobenzene process example to use all these concepts to perform an economic evaluation.

We are going to use a simplified method to analyze the economic merits of the novel technology of our example. For example, we are not going to account for inflation or salvage value of the plant or equipment, and we are going to assume that revenues and operating expenses are fixed equal value annuities, and that the CAPEX is all spent at the beginning of the project. A more complex analysis can be performed using the background covered in Appendix D.

As shown in Table 3.22 and 3.23, the novel technology has a lower CAPEX and a lower OPEX than the incumbent technology, so a question may be, what is the point of doing a Present Worth Analysis? The novel technology has obviously better economics. However, the reader should keep in mind that the incumbent technology is proven. There are no significant technical risks associated with it. On the other hand, the novel technology is unproven and therefore introduces process risks, which are discussed in the next section. For a potential client to accept technical risks, there needs to be an economic advantage, a sufficiently large advantage. The PV Analysis will tell us how significant that economic advantage is. In addition, not all projects involve the construction of complete new process plants, in fact, more often than not, technology improvement projects involve the retrofitting of existing plants with new technology. Therefore, the additional question to ask may be whether the novel technology economic advantage is sufficient to warrant the consideration of retrofitting an existing plant or not. Let us now answer these questions.

The key data required for the analysis can be summarized as follows,

- Production capacity of the process plant, 100,000 MTPY of nitrobenzene
- *CAPEX*: incumbent technology = $10.39 million / novel technology = $10.31 million

- *OPEX*: incumbent technology = $88.80 million / novel technology = $86.49 million
- Depreciation period = 7 years
- The annual revenue of the plant is approximately $115 million (estimated in Module 2)

Based on the above data, the calculated IRRs are 252% and 276% for the incumbent and novel technologies respectively. Both cases show very attractive IRRs, much above typical MRRs. However, the difference between the two cases is just over 9%. Therefore, the question moving forward would be how much we would need to de-risk the novel technology for a potential investor (client) to accept a 9% improvement on the IRR. Experience shows that the technology would need to be de-risked significantly.

Let us briefly look at the more interesting case of retrofitting existing nitrobenzene plants with the novel technology. In this case, the changes required in the plant would include changing the following equipment:

- Nitration Reactor (R-101)
- Product Separator (S-102) – i.e., the data on Table 3.19 shows that the separator needs to be larger.
- Acid Pump (P-107) – i.e., the data on Table 3.19 shows that the pump needs to be larger.

The total delivered cost of these equipment is approximately $397,000 (i.e., data from Table 3.21), for a Total Capital Investment (TCI) of approximately $2.26 million (i.e., using the factor of Table 3.16). With this TCI, the client would attain operating cost savings of approximately $2.31 million per year (i.e., the OPEX difference between the novel technology and the incumbent technology). Therefore, this investment would provide an IRR of approximately 102%, which is higher than the MRR of 26-40% expected by most companies for a brown-field project.

The economic analysis shows that the novel technology is attractive for both new plants and for the retrofitting of existing plants. The question now is, how much risk does the new technology present to potential clients?

3.3.3 Technical Process Risk and Sensitivity Analysis

Within the concepts discussed up to now and the degree of development expected from a process technology up to his point, *technical* risk analysis involves:

- Identifying the main design or development variables that affect significantly the goals and objectives of the development work.
- Estimating how much risk is associated to each development variable of concern

Based on the limited amount of development work typically performed up to this stage, technical risks are mainly associated with the assumptions made so far. For example, many assumptions were made to develop the flowsheet and mass and energy balance for the process, and many assumptions were made to preliminarily size the equipment. These are all assumptions that introduce some technical risk. This is a reason of why it is important that from the early stages of a development project all assumptions are kept tabulated and up to date. As an example, Table 3.24 shows a tabulation of all assumptions made so far in the development of the nitrobenzene process of the example that we are following. The next step is to quantify the effects that these technical risks present. Obviously, technical risks that significantly affect the results need higher attention than those that do not. However, the type of work involved in de-risking assumptions would also play a role on when the identified technical risks would be addressed. For example, assumptions that can be de-risked through further literature reviews or using an existing bench-scale apparatus may happen ahead of any de-risking work involving the construction of, for example, a pilot plant. With our technical risks identified, we now can move into assessing them.

Risks are typically quantified through the introduction of *sensitivity analysis* and *uncertainty analysis*. Both types of analyses are the study of how uncertainty in the inputs to a deterministic model affect the outputs of the model. Deterministic models are just mathematical models were inputs lead to exact outputs. Examples are mass and energy balances or economic models. If we know how much inputs to the model can vary, then the deterministic model can tell us how much the outputs would be affected.

The *sensitivity analysis* approach is typically used to rank how the assumptions may affect the results. By results, it is meant the objectives of the TEA. In our particular case, it is the IRR of our nitrobenzene technology project. The most basic type of sensitivity analysis is a contribution analysis in which an identical error distribution, rather than the actual known error distribution, is provided to all variables where assumptions had to be made (e.g., +20% and -20%). Figure 3.12 (a) is Tornado Diagram where the results of a sensitivity analysis on the IRR of a project are

shown. In this particular example, we can see that Feed Conversion and Price of Products are the variables with the most potential to significantly affect the IRR of the project

The *uncertainty analysis* approach is used to quantify the actual potential error introduced by each variable on the results. In this approach, the known errors for each variable where an assumption had to be made are used. Figure 3.12 (b) shows the results of an uncertainty analysis on the IRR of the same project of Figure 3.12 (a). In this particular example, we can see that the uncertainty introduced by the Price of Products on the IRR is low because the price is actually known with good accuracy (i.e., the IRR is very sensitive to the Price of the Product (Figure 12 (a)) but the uncertainty introduced by it is low (Figure 12 (b)).

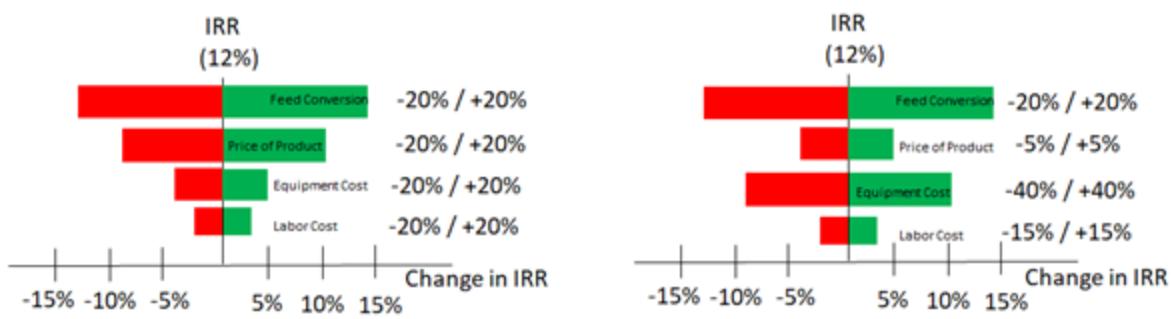

(a) (b)

Figure 3.12 – Tornado Diagrams – (a) Sensitivity Analysis - Equal Change in Independent Variables (b) Uncertainty Analysis - Actual Known Variability in Independent Variables

Different statistical tools and methodologies can be used to perform the uncertainty analysis. These tools are specifically useful when dealing with complex processes where many variables can be affecting the goals and objectives. A well-known uncertainty analysis tool is the Monte Carlo method, which is a mathematical technique that performs risk analysis by building models of possible results through the introduction of random values, within ranges specified by the user, for any factor that has inherent uncertainty. The output from a Monte Carlo simulation tells the user not only what may happen, but also how likely it is to happen.

A further review of sensitivity analysis tools and methods is outside the scope of this module. However, Raychaudhuri (26) provides a good introduction to Monte Carlo simulations, and Dheskali (27) provides a good example of how the Monte Carlo method can be used to assess

bio-based chemical processes against fossil fuel processes. Through the remainder of this section, we are going to assume that the relevant variables are few, and that a simpler qualitative/quantitative analysis is sufficient. Under this scenario, the risk and sensitivity/uncertainty analyses steps typically involve the following steps:

- Tabulating all the relevant assumptions made through the development of the flowsheets, mass and energy balance model, OPEX and CAPEX estimate, and economic analysis. We are looking for assumptions that may affect the goals and objectives of the TEA and development work.
- Using the tools developed (i.e., models – e.g., the mass and energy balance), determining how these assumptions (i.e, variables – e.g., assumed yield in a reactor) may affect the goals and objectives. This is a sensitivity or uncertainty analysis, where variables are changed by a fixed reasonable range or variable reasonable ranges respectively, while quantifying the effects on goals and objectives.
- Ranking the variables by the risk they pose
- Determining and defining the work required to decrease the risks associated with the main variables of concern. This step requires judgement.
- Adding the identified de-risking work to the development plan. Add only the work deemed necessary or important. Risks deemed remote or low in their effect on the goals can be parked.

Let us go back to our nitrobenzene process example to work through the above-described steps.

Through the development of the TEA for the novel technology of our example, the following assumptions were made that were deemed to introduce risk to the project:

- Development of the process flowsheet, assumptions summarized on Table 3.5
- Development of the mass and energy balance, assumptions summarized on Table 3.8
- Estimation of the CAPEX, which forms part of the economic analysis, assumptions summarized on Table 3.20.

All the above assumptions are tabulated on Table 3.24. We should keep in mind that the specific technology development of our example only involves a new reactor and reaction conditions, but for completeness, we are looking at the whole process because the product quality of the new

technology, mainly the formation of different by-products types and yields, may affect the operating performance of downstream systems.

Table 3.24 – Summary of Identified Technical Process Development Risks

Reaction Area	
	Flowsheet Development
1-a	Acceptable conversion can be attained without a stirred reactor downstream of the main plug flow reactor, R-101 (concern - patent literature calls for the potential need of an additional stirred reactor)
1-b	A pump is not required to move the sulfuric acid from the Product Separator (S-102) to the Acid Evaporator (F-103) (concern - the volume of acid is large and may not be possible to gravity flow this flow, but this would a very expensive pump)
	Mass and Energy Balance Development
1-c	Full conversion is obtained in 70 seconds for the operating conditions selected (concern – this is based on patent data, but not sufficient kinetic data is available)
1-d	The separation of the nitrobenzene and the acid in the Product Separator (S-102) is complete (i.e., at the exit of the unit, insignificant entrainment of one phase on the other) occurs (concern – it is not possible to predict and it can significantly affect operating costs if much acid, which needs to be eventually neutralized, is entrained in the product)
1-e	Insignificant sulfuric acid is entrained with the water vapor leaving the Acid Evaporator (F-103) (concern - this could affect how much acid is lost in the process, same concern as previous assumption)
	Economic Analysis
1-f	The reaction rate doubles every 10 ºC of average temperature increase. This is a rough well-known rule of thumb. Reaction kinetic data is not available in the open literature. (The average reaction temperature between the novel process and the incumbent technology is different) – (concern – sizing of the novel reactor may not be adequate if assumption does not hold true, which may lead to unconverted feeds leaving the reactor, drastically affecting the economics of the process)
1-g	The separation of the nitrobenzene and the acid in the Product Separator (S-102) is complete (i.e., at the exit of the unit, insignificant entrainment of one phase on the other) occurs. The separation residence time requirement is 5 minutes (based on experience) (concern – sizing of separator may not be adequate if assumption is incorrect, potentially leading to entrainment of acid with a significant effect on operating costs)

Product Purification	
	Flowsheet Development
2-a	The partition coefficients for the nitrophenol between the nitrobenzene and caustic solutions are high enough that one stage of washing is sufficient to remove the nitropenols from the nitrobenzene below 10 ppm (concern - more than one washing stage may be required if this assumption proves incorrect)
2-b	The separation between the nitrobenzene and the caustic solution in Nitrobenzene/Caustic Solution Separator (S-111) is very good, leading to insignificant caustic leaving with the product nitrobenzene, which could present a product quality issue if it is not the case.
	Mass and Energy Balance Development
2-c	The partition coefficients for the nitrophenol between the nitrobenzene and caustic solutions are high enough that one stage of washing is sufficient to remove the nitropenols from the nitrobenzene below 10 ppm (concern - more than one washing stage may be required, potentially affecting product quality)
2-d	The separation between the nitrobenzene and the caustic solution in Nitrobenzene/Caustic Solution Separator (S-111) is very good, leading to insignificant caustic leaving with the product nitrobenzene, which could present a product quality issue if it is not the case.
	Economic Analysis
2-e	The partition coefficients for the nitrophenol between the nitrobenzene and caustic solutions are high enough that one stage of washing is sufficient to remove the nitropenols from the nitrobenzene below 10 ppm (concern - more than one washing stage may be required)
Effluent Treatment	
	Mass and Energy Balance Development
3-a	The waste water effluent can be neutralized using a single stage of neutralization (concern - in many processes two stages are required)
	Economic Analysis
3-b	The separation between the benzene and the water in Benzene/Water Separator (S-116) is very good, with an assumed separation residence time of 20 minutes (based on experience) (concern- significant water may be entrained with the benzene recycled back to the reactor, which may affect reactor performance)

Not tabulated in Table 3.24 are a number of heuristics used to size the equipment. The use of heuristics introduces risk to the project, mainly equipment scale-up risk. We are going to deal with those risks in the next module.

Within the main objectives of the development work for our example, which are mainly to lower the operating and capital costs of nitrobenzene plants, a sensitivity analysis was performed to determine how each of the assumptions tabulated on Table 3.24 affects the objectives. Next, development work to address the risks presented by those assumptions were proposed. Table 3.25 presents the results in order of priority, from most important to address to least important to address. As Table 3.25 shows, approximately half of the identified process risk can be addressed or de-risked through bench-scale work or calculations (i.e., an iteration to the bench-scale phase is required before moving forward), while the other half would need the design and construction of a pilot plant to be properly addressed.

Table 3.25 – Summary of the Outcome of the Uncertainty-Risk Analysis

Case (by priority)	Development Work Required
1-a 1-c 1-f	All these assumption are related. It was determined that accurate conversion numbers could only be obtained at the pilot scale. The assumptions will be confirmed on the pilot phase of the project.
1-d 1-g	It was determined that some scale and real reactor output, with all its impurities, which can affect separation, are required to determine separation efficiency in S-102. The assumptions will be confirmed on the pilot phase of the project.
2-b 2-d	It was determined that some scale and real process product, with all its impurities, which can affect separation, is required to determine separation efficiency in S-111. The assumptions will be confirmed on the pilot phase of the project.
2-a 2-c 2-e	This assumption can be confirmed by determining the partition coefficients, which can be done in the lab. Bench-scale work is sufficient to address this risk.
1-e	This assumption can be confirmed by working with suppliers of entrainment separation equipment.
3-b	This risk can be assessed by performing lab experiments where the benzene feed contains some water. Bench-scale work is sufficient to address this risk.
3-a	This assumption can be confirmed through bench-scale experiments
1-b	This assumption can be confirmed through engineering hydraulic calculations

3.4 Summarizing the Work and Assessment Findings Through TEA Phase

As was discussed through this module, through the TEA phase the process is reviewed in more detail using available literature and laboratory gathered data. However, the technology is now assessed as a complete process. We are considerably expanding the boundaries of the review, and the technology assessment goes deeper into details.

Through the TEA phase, our objectives are the following:

- Developing an expanded flowsheet for the process technology
- Preparing a detailed mass and energy balance model for the developed flowsheet
- Estimating the operating expenses (OPEX) and capital expenses (CAPEX) associated with the process
- Completing an economic analysis of the process
- Identifying, summarizing, and ranking process risks that must be addressed

Let us go back to our development example to show how the TEA affected the early stages of the scale-up and commercialization pathway of a process technology, beyond the Idea phase.

Through the TEA, we have been able to better quantifying the commercial advantages of the novel technology against the incumbent technology. We have been able to assess that the technology may produce substantial economic advantages in both green-field and brown-field projects. The commercial advantages of the novel technology are now more obvious than they were through the Idea phase of the development project. As important, we have been able to better quantify the technical risks associated with the novel technology at this stage of its development, and to identify the development work ahead to mitigate these risks. Some of the development work to mitigate process risks involve going back to the bench work, which means expanding the scope of the lab experiments done to date (i.e., our first iteration in the development pathway). It is at this point that we finally have some of the background required to start putting together a defendable and structured development program for the technology. What is missing to build a complete development program is identifying the work required to develop the scale-up models for the technology, which we will cover on the next module.

At the end of this phase, most process technologies would be at a Technology Readiness Level (TRL) of approximately 3.

One concluding remark is the importance of documenting work and findings. Through every stage of development, a detailed report must be prepared and circulated to stakeholders. A report from the assessment work completed through the TEA phase should include most of the following sections:

- Goal and scope of the analysis
- A clear definition of the boundaries assumed for the analysis
- Calculation and results
  - Flowsheet
  - Mass and energy balance
  - OPEX and CAPEX
  - Economic analysis
  - Risk and sensitivity assessment
- Proposal for the next phase of development

References

1- Maranghi S., Brondi C., (2020). *Life Cycle Assessment in the Chemical Product Chain: Challenges, Methodological Approaches and Applications*, First Ed., Springer.

2- Moriguchi Y., Kondo Y., Shimuzu H, (1993). Analyzing the Lie Cycle Impact of Cars: The Case of CO_2, *Ind Environ 16:42-45*.

3- Anastas P.T., Warner J.C., (1998). *Green Chemistry: Theory and Practice*, Oxford University Press.

4- Seider, D.W., et al., (2017). *Product And Process Design Principles: Synthesis, Analysis, and Evaluation*, Fourth Ed., Wiley.

5- Guenkel, A. A.; Maloney, T. W., (1996), Recent Advances in Technology of Mononitrobenzene Manufacture. In Nitration: Recent Laboratory and Industrial Developments, *ACS Symposium Series 623*, *American Chemical Society*, Washington, DC.

6- Guenkel, A. A..(2013), The Adiabatic Mononitrobenzene Process from the Bench Scale in 1974 to a Total World Capacity Approaching 10 Million MTPY in 2012, *Chemistry, Process Design, and Safety for the Nitration Industry, ACS Symposium Series 1155; American Chemical Society*: San Diego, CA.

7- Guenkel A. et al., (1994), *Nitration Process*, US 5,313,009

8- Brereton C. M., Guenkel A. A., (1998), *Nitration Process*, US 5,963,878

9- Buchi S., (2018), *Method of Purifying Nitrated Aromatic Compounds from a Nitration Process*, US 10,155,719

10- Boyd T., (20010, *Integrated Effluent Treatment Process for Nitroaromatic Manufacture*, US 6,288,289

11- Knauf T., Drinda P., (2018), *Process for Producing Nitrobenzene*, US 10,023,524

12- Pohlmann J., et al., (2017), *Method and Apparatus for Purifying Nitration Products*, US 9,540,313

13- Smith R., (2017), *Chemical Process: Design and Integration*, Second Ed., Wiley

14- Chambers F. S., Sherwood T. K., (1937), Absorption of Nitrogen Dioxide by Aqueous Solutions, *Industrial and Engineering Chemistry, Vol. 20, No. 12, pages 1415-1422*

15- Murphy D. T., (1977), Design and Analysis of Industrial Experiments, *Chemical Engineering*, *June, 168-182*.

16- Harmsen J., (2019). *Industrial Process Scale-up: A Practical Innovation Guide from Idea to Commercial Implementation*, Second Ed., Elsevier B.V.

17- Knauf T., Von Gehlen F., Schmiedler J., Pilarczyk K., Drinda P., (2008), *Process for the Production of Nitrobenzene*, US 7,326,816

18- Guenkel A. et al., (1994), *Nitration Process*, US 5,313,009

19- Smith J. C., Foecking N. J., Barber W. P., (1949), Solubility Data for Aniline-Nitrobenzene-Water System, *Industrial And Engineering Chemistry*, 41, 2289-2291

20- Eckenfelder W. W., Musterman J. L., (1995), *Activated Sludge Treatment of Industrial Wastewate*, Technomic Publishing.

21- Smith R., (2017). *Chemical Process: Design and Integration*. Second Ed., Wiley

22- Reid R.C., Prausnitz J.M., Poling B.E., (1987), *The Property of Gases and Liquids*, Fourth Ed., McGraw-Hill.

23- S. Brahadeeswaran et al., (1998), Crystal growth and characterization of semiorganic nonlinear optical material: sodium p-nitrophenolate dehydrate, *J. Mater. Chem., 8(3), 613-618.*

24- Lang, H.J., (1947), Cost Relationship in Preliminary Cost Estimates, *Chem. Eng., 54(9), 130-133.*

25- Peters, M.S.K., et al, (2003), *Plant Design Economics for Chemical Engineers*, 5th ed., McGraw-Hill.

26- Raychaudhuri S., (2008), Introduction to Monte Carlo Simulation, *Proceedings of the 2008 Winter Simulation Conference*, 91-100.

27- Dheskali E., Koutinas A. A., Kookos I. K., (2020), Risk Assessment Modeling of Bio-Based Chemicals Economics Based on Monte-Carlo Simulations, *Chemical Engineering Research and Design*, 163, 273-280.

Appendix A – Typical LCI Output Sheet - Polyethylene Terephthalate (PET) Process

Plastic LCI Dataset

Functional unit: 1000 kg Polyethylene Terephthalate (PET) (1)

1 Material Inputs		**Unit**
Main material inputs		
Process Chemicals (2)	7.20E+00	kg
Sodium Chloride	1.20E+00	kg
Other (3)	3.70E-01	kg
Land use		
Primary ancillary materials		

2 Energy		**Unit**
Coal	1.34E+04	MJ
Crude Oil	1.81E+04	MJ
Natural Gas	3.18E+04	MJ
Hydro	7.15E+02	MJ
Nuclear	3.27E+03	MJ
Other	2.36E+00	MJ
Total Fuels	6.73E+04	MJ
Coal		
Crude Oil	1.66E+04	MJ
Natural Gas	4.97E+03	MJ
Total Feedstocks (4)	2.16E+04	MJ
Total Fuel and Feedstocks	8.89E+04	MJ

3 Water Use		**Unit**
Total water		
Fuel related water		
Process related water		

4 Emissions to Air		**Unit**
Carbon dioxide	2.80E+03	kg
CO2 fossil fuel		
CO2 biomass		
Carbon monoxide	1.10E+01	kg

Sulphur oxides (reported as SO2)	1.40E+01	kg
Nitrogen oxides (reported as NO2)	9.50E+00	kg
Methane	2.50E+01	kg
Dust & particles (includes metals) (5)	4.62E+00	kg
Acid gases	4.90E-01	kg
NMHC (non-methane hydrocarbons)		
VOC (6)	7.20E+00	kg
Hydrocarbons (unspecified)	1.20E+00	kg
Nitrogen	2.10E+02	kg
Other organic compounds (7)	3.40E+00	kg
Other (8)	3.52E-01	kg

5 Emissions to Water		**Unit**
Phosphates and ammonia	1.50E-02	kg
Oils and greases	3.30E-01	kg
Suspended solids	4.50E+00	kg
Other organics	1.00E-01	kg
Other (8)	1.50E+00	kg
Hydrocarbons	3.90E-02	kg
Metals	2.80E-01	kg
Heavy Metals		
Acids	2.00E-02	kg
BOD	2.00E+00	kg
COD	1.10E+00	kg
Salinity	4.30E+00	kg
Dissolved solids	1.90E+01	kg

6 Wastes		**Unit**
Total waste		
Process related wastes		
Municipal wastes		
Emissions to Land		
RCRA D (9)	2.40E+02	kg
RCRA C (10)	2.00E+00	kg
Emissions to Deepwell		
RCRA D (9)	1.10E+01	kg
RCRA C (10)	1.30E-02	kg

Footnotes
(1) Numbers may not add up exactly due to rounding off
(2) Includes additives, catalysts, chemicals, etc.
(3) Includes other feedstocks, such as sulfur, SO2 from recovery operations, etc.
(4) Feedstock values are the theoretical energy that could be recovered via combustion
(5) Total of Metals and metal compounds and PM10

Appendix B – Development of the Process Flow Diagram – Example

In these notes, we will work in detail how the Blow Flow Diagram (BFD) for the example we introduced in Module 2 is transformed into a complete Process Flow Diagram (PFD). For this example, a BFD and first pass mass balance was previously developed (i.e., see section 2.1.1). This BFD is shown again in Figure B-1.

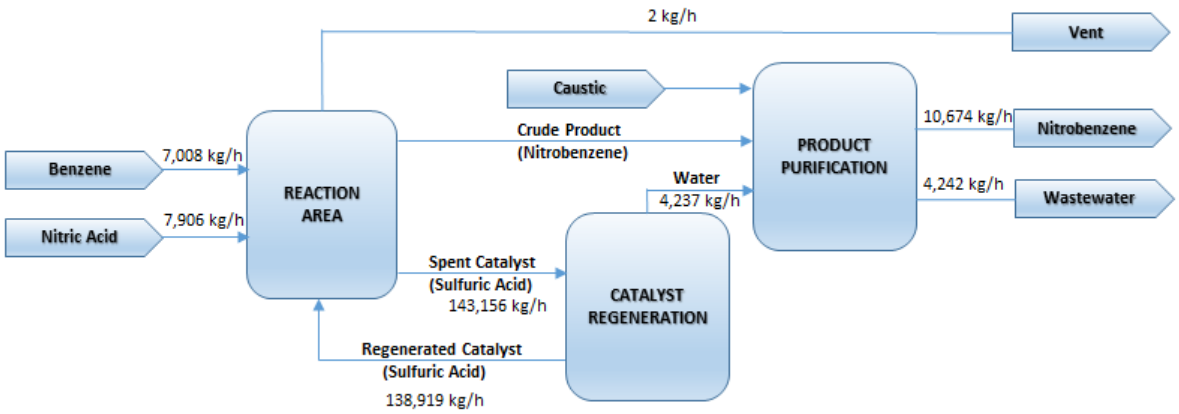

(a)

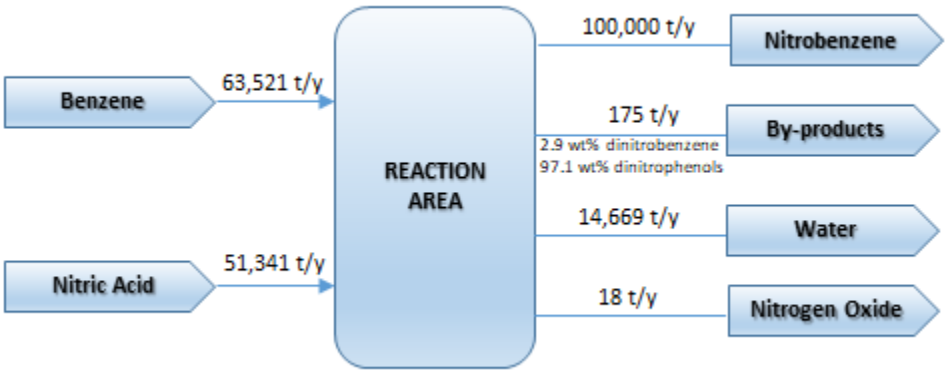

(b)

Figure B-1 – BFD and Mass Balance, (a) For the Process, (b) For the Reaction Area

The relevant chemistry for this process was discussed in section 2.1.1 of Module 2, and the relevant stoichiometric equations are shown below.

$$\underset{benzene}{C_6H_6} + \underset{nitric\ acid}{HNO_3} \Rightarrow \underset{nitrobenzene}{C_6H_5NO_2} + \underset{water}{H_2O} \qquad \text{(nitrobenzene formation)}$$

$$\underset{benzene}{3\ C_6H_6} + \underset{nitric\ acid}{8\ HNO_3} \Rightarrow \underset{dinitrophenol}{3\ C_6H_3(NO_2)_2OH} + \underset{water}{7\ H_2O} + \underset{nitrogen\ oxide}{2\ NO} \qquad \text{(dinitrophenol formation)}$$

$$\underset{benzene}{C_6H_6} + \underset{nitric\ acid}{2\ HNO_3} \Rightarrow \underset{dinitrobenzene}{C_6H_4(NO_2)_2} + \underset{water}{2\ H_2O} \qquad \text{(dinitrobenzene formation)}$$

We should keep in mind that the nitrobenzene reaction is typically run with a stoichiometric excess of benzene.

Let us now summarize the quality specifications the nitrobenzene product must meet. From section 2.1.4 in Module 2, we know that the product quality must meet the following specifications,

- Dinitrobenzene concentration < 50 ppm
- Nitrophenol concentration < 10 ppm
- Water concentration < 1,000 ppm

Nothing is mentioned in the open literature about feed quality requirements (i.e., benzene or nitric acid). However, any impurity entering the process with the feeds will need to be followed carefully through the process to ensure it does not cause issues. To do so, we will follow these impurities through the process using the mass and energy balance model that will develop later.

Let us now summarize the emission targets that the process must meet. From section 2.1.5 in Module 2, we know that the process emissions will need to meet the following standards or guidelines,

- Nitrogen oxide gas in the vented gas emissions < 75 mg/m^3
- Nitrobenzene concentration in water effluent < 8 micrograms/liter
- Benzene concentration in water effluent , 40 micrograms/liter
- BOD of water effluent , 45 mg/L

Let us now start building the PFD. Good process descriptions of the incumbent technology are presented by Guenkel (5,6). In addition, there are a number of patents that cover in some detail different parts of the process. However, let us first break the process into the following parts as we build the overall process flowsheet – refer to Figure B-2:

- Reaction loop
- Product purification
- Effluent treatment

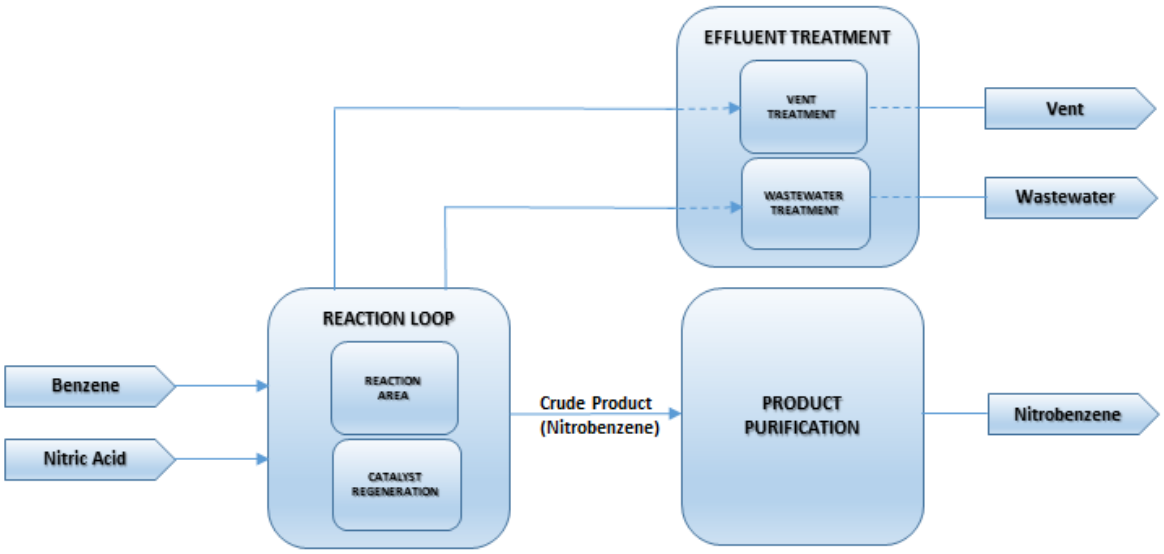

Figure B-2 – Breakdown of the Process for the Purpose of a Flowsheet Review

Warning - It is here that we will start to get very technical on our work, and following the discussion, without doing the actual work or being familiar with the process of our example, may be somewhat challenging. However, a sense for the work required and the approach to that work should be apparent. The reader should concentrate on the described approach rather than the details.

Reaction Loop Block

The US nitration patents by Guenkel (7) and Brereton (8) provide sufficient information to start building the flowsheet for the reaction loop. The following information was gathered from a review of those patents:

- The reactor is a plug flow reactor followed by a stirred reactor, but the stirred reactor is not required if the reaction is fast.
- The reaction is fast, with residence time requirements of 25 to 70 seconds.
- A separator is placed at the discharge of the reactor to separate the produced nitrobenzene and diluted sulfuric acid catalyst.
- The separated product nitrobenzene flows to the product purification steps of the process.
- The diluted sulfuric acid catalyst is reconcentrated in an evaporator before being sent back to the reactor.
- The evaporator is operated under vacuum.
- The gas formed as by-product in the reaction flashes off in the evaporator.
- The separator at the discharge of the reactor may operate under pressure.

The patent descriptions also indicate that the heat generated by the nitration reaction is used, in the catalyst regeneration step, to evaporate the by-product water produced in the reaction. However, a simple mass and energy balance calculation on the reaction loop shows that the reaction, even though fairly exothermic at 1190 kJ/kg of benzene, does not produce sufficient energy (heat) to evaporate all the by-product water that accumulates in the sulfuric acid catalyst (i.e., the water produced by the reaction is miscible in the sulfuric acid catalyst flowing through the reaction loop but not in the nitrobenzene leaving the reaction loop), which means that additional heat needs to be introduced into the evaporator. This was determined while developing the mass and energy balance of the process. It should be apparent that there is a feedback loop connecting the development of the flowsheet and the mass and energy balance model.

Putting all the above facts together, we come up with the flowsheet shown in Figure B-3. Sulfuric acid is pumped from the Acid Evaporator (F-103) to the Nitration Reactor (R-101). Benzene and nitric acid are pumped into the reactor. The product nitrobenzene and sulfuric acid catalyst, two

immiscible phases, separate in the Product Separator (S-102) at the discharge of the reactor. With the separator running under pressure, the product nitrobenzene flows, without a pump, to the purification steps of the process. The sulfuric acid flows, without a pump, to the Acid Evaporator (F-103). The evaporator runs under vacuum. In the evaporator, the water produced in the reaction is evaporated, and the reconcentrated sulfuric acid is pumped back into the reactor. Make-up heat is added to the evaporator to aid the water evaporation. The by-product gas from the reaction, mainly nitrogen oxide, leaves the reaction loop with the water vapor leaving the evaporator.

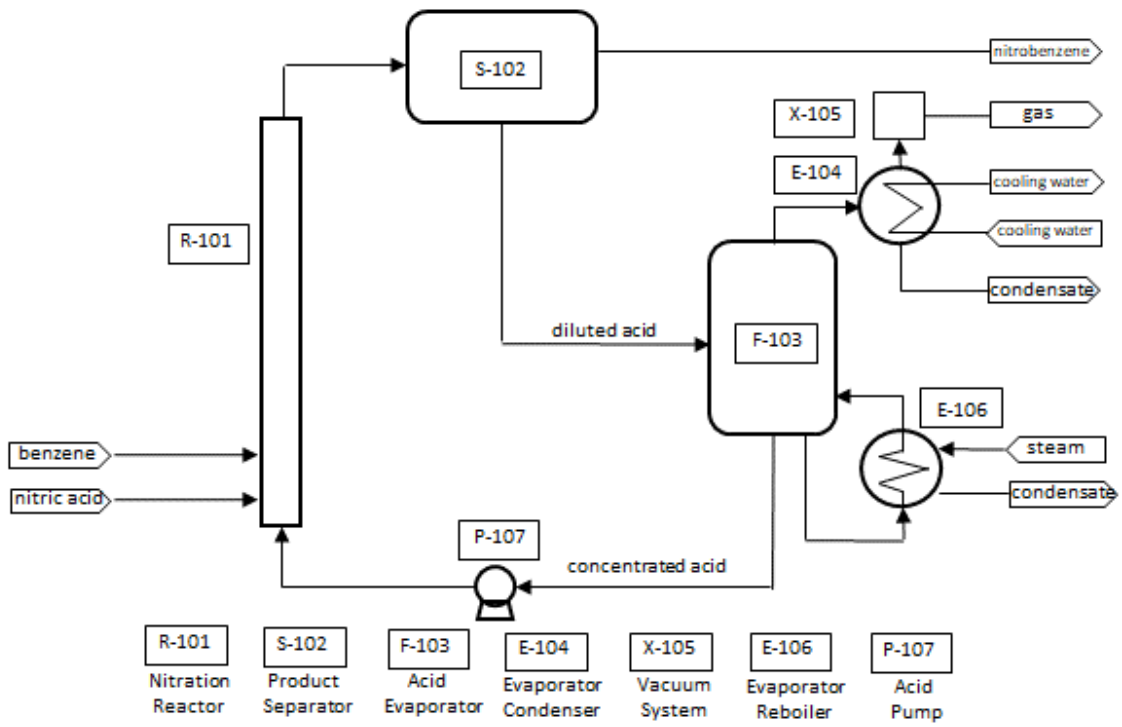

Figure B-3 – Flowsheet of the Reaction Loop

We have now put together the flowsheet for the first block of our BFD (i.e., the Reaction Loop).

The list of assumptions made to develop the flowsheet of Figure B-3, that present a process or design risk that must be eventually assessed, include:

- Acceptable conversion can be attained without a stirred reactor downstream of the plug flow reactor
- A pump is not required to move the sulfuric acid from the Product Separator (S-102) to the Acid Evaporator (F-103)

Product Purification Block

Both the reaction dinitrobenzene and nitrophenol by-products are miscible in the product nitrobenzene leaving the reaction loop. According to the product specifications, the dinitrobenzene concentration in the final product must be below 50 ppm, which according to the inventor's patent data (7) it already meets. However, the nitrophenol concentration specification is less than 10 ppm and the new process, even though it produces less nitrophenols that the incumbent industrial process, it still produces a nitrobenzene with a concentration of nitrophenols much above 10 ppm (i.e., 1700 ppm as reported by the inventor in his patent). The product also contains the excess benzene reactant introduced in the reactor, and following the second principle of green chemistry (i.e., Atom Economy), adding a process step to recover that benzene likely makes economic and environmental sense. Therefore, the product purification step must achieve three goals:

- Reduce nitrophenol concentration in the final product below 10 ppm
- Reduce the water concentration in the final product below 1000 ppm
- Recover the benzene dissolved in the final benzene product

The US patents by Buchi (9), Boyd (10), Knauf (11), and Pohlmann (12) provide sufficient information to start building the flowsheet for the product purification area. The following information was gathered from those patents:

- Nitrophenols are extracted from the nitrobenzene by contacting it with a caustic solution, which converts the nitrophenols dissolved in the nitrobenzene into nitrophenolate salts that then transfer to the caustic solution phase.
- The caustic solution with the nitrophenol salts, called "red water" for its color, is typically treated separately from other water effluent generated in the process because of its high toxicity (i.e., the other wastewater can be treated in a typical biological water treatment facility, the red water cannot).

- The nitrobenzene and caustic solution are contacted using a static mixer or an agitator and then separated in a gravity separator.
- The "red water" can be treated in a thermolysis unit (i.e., a high temperature and high pressure unit) before being discharged – this step will be skipped in our analysis to simplify the review.
- The product nitrobenzene to caustic solution flow ratio for good extraction of the nitrophenols should be in the range of 5:1 to 1:1.

To minimize the amount of wastewater generated, we are going to introduce enough water to keep the nitrophenol salts from crashing out of solution, which according to S. Brahadeeswaran (23) is approximately 6 wt% at room temperature. In addition, using the first principle of green chemistry (i.e., Prevention), we are going to aim to use some of the water produced in the reactor as the water in the caustic solution; therefore decreasing the amount of wastewater generated by the process. It also becomes apparent through the mass and energy balance calculations that to minimize water and caustic use, the caustic solution should be recirculated to maintain the desired nitrobenzene to caustic solution flow ratio of 5:1 to 1:1.

Putting all the above facts together, we come up with the flowsheet shown in Figure B-4. A portion of the condensate generated in Evaporator Condenser (E-104) is sent to the Caustic Solution Tank (T-108). This condensate is pumped to the Static Mixer (M-110) where is mixed with concentrated caustic ahead of reaching the mixer generating the caustic solution. In the Static Mixer (M-110), the caustic solution and nitrobenzene are mixed before flowing into the Nitrobenzene / Caustic Solution Separator (S-111) where the two phases are separated. The nitrobenzene, free of nitrophenols, is pumped to the next purification step. Most of the caustic solution flows back to the Caustic Solution Tank (T-108) with a slipstream (i.e., the generated wastewater stream) being pumped out to further treatment.

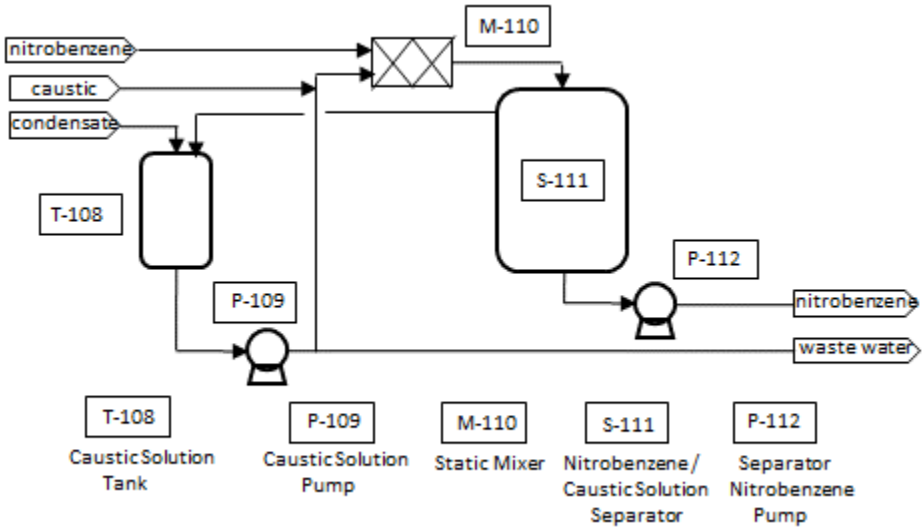

Figure B-4 – Product Purification – Part 1

The list of assumptions made to develop the flowsheet of Figure B-4 that present a process or design risk that must be eventually assessed, include:

- The partition coefficients for the nitrophenol between the nitrobenzene and caustic solution are high enough that one stage of washing is sufficient to remove the nitropenols from the nitrobenzene below 10 ppm.
- The separation between the nitrobenzene and the caustic solution in Nitrobenzene/Caustic Solution Separator (S-111) is very good, leading to insignificant caustic leaving with the product nitrobenzene, which could present a product quality issue.

The last step of the purification process involves the recovery of the excess benzene dissolved in the nitrobenzene, and the reduction of dissolved water in the nitrobenzene to below 1000 ppm.

The European patent by Knauf, EP 1,816,117 describes the use of a distillation column as a means of removing the excess benzene and dissolved water from the product nitrobenzene pumped out from the Nitrobenzene / Caustic Solution Separator (S-111). Figure B-5 shows the last proposed step for the product purification part of the process based on Knauf's patent description. Nitrobenzene is pumped from the Nitrobenzene / Caustic Solution Separator (S-111) to the Product Distillation Column (C-113). Benzene and water are stripped from the product

nitrobenzene and leave through the top of the column where both condense in the Product Distillation Column Condenser (E-115). Then the benzene and water are separated in the Benzene / Water Separator (S-116). The benzene is recycled back to storage before being introduced again into the Nitration Reactor (R-101). The separated water forms part of the wastewater of the process. The final product nitrobenzene leaves the bottom of the column and it is sent to storage or to the downstream process.

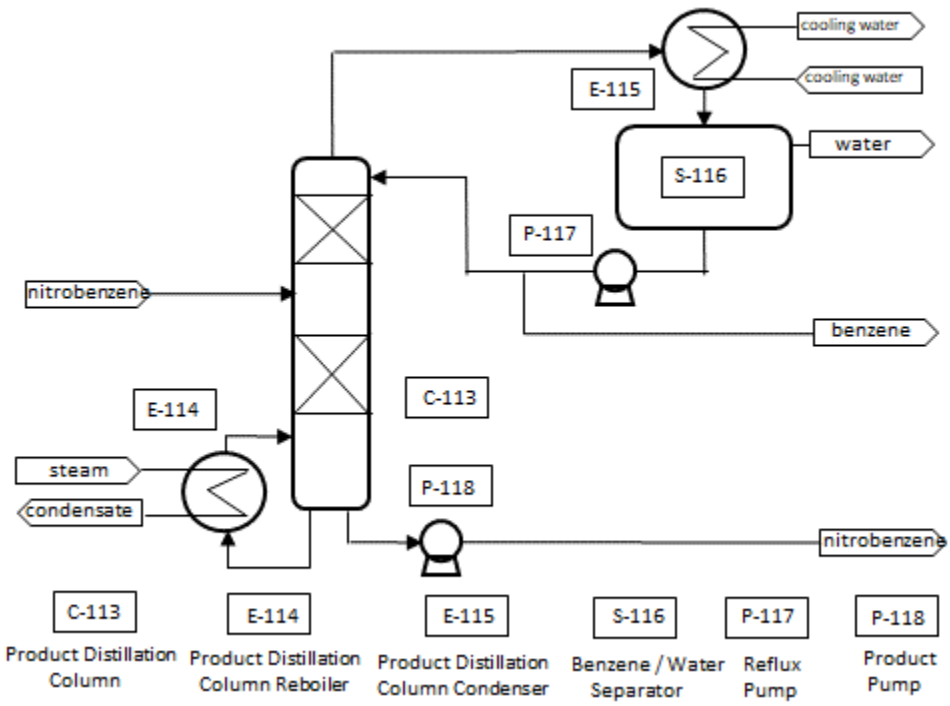

Figure B-5 – Product Purification – Part 2

We have now put together the flowsheet for the second block of our BFD (i.e., the Production Purification block).

To complete the overall process flowsheet, we need to finish dealing with the by-product gas generated in the reactor and the remaining of the by-product water generated in the reactor (i.e., the Effluent Treatment block).

Effluent Treatment Block

The process has two effluents that must be dealt with. There is a waterwaste stream, and there is a gas waste stream.

The gas stream originates in the Acid Evaporator (F-103), and it contains the nitrogen oxide by-product produced in the reaction and significant water/benzene/nitrobenzene vapors. As discussed in section 2.1.5 of Module 2, the gas effluent from the process contains too much nitrogen oxide to be discharged without treatment. It also likely contains too much organic vapors. Process options to deal with organics and nitrogen oxide in waste gas streams are described by Smith (13), with scrubbing (i.e., absorption) being a good option for our process. In the case of the organics and following the fifth principle of green chemistry (i.e., Safer Solvents and Auxiliaries), we should aim to use what we already have in the process as absorption solvent. Using cold nitrobenzene product, which has a very low vapor pressure, is an obvious options for capturing organic vapors from the vent. A caustic scrubber for the capture of nitrogen oxide gas is the other sensible option, as proposed by Smith (13). Figure B-6 shows the proposed vent treatment steps of the overall process. The waste gas from the Acid Evaporator (F-103) flows into the Organic Scrubber (C-119) where cold circulating nitrobenzene absorbs the organics from the waste gas. Make-up nitrobenzene is added to the scrubber on a continuous or batch basis, while an equal slipstream is removed from the scrubber and sent back to the main process. The waste gas leaves the organic scrubber and is mixed with air. The air is introduced to convert the nitrogen oxide into nitrogen dioxide which is what is absorbed in the caustic solution. The chemistry of nitrogen oxide absorption in caustic solutions is well documented, e.g., see Chambers (14). The waste gas enters the Nitrogen Oxide Scrubber (C-121) where cold circulating caustic solution absorbs the converted nitrogen dioxide. The waste gas leaves the scrubber and is discharged. Make-up caustic solution is added to the scrubber on a continuous or batch basis, while an equal slipstream is removed from the scrubber and sent to the wastewater treatment part of the process for further treatment before being discharged.

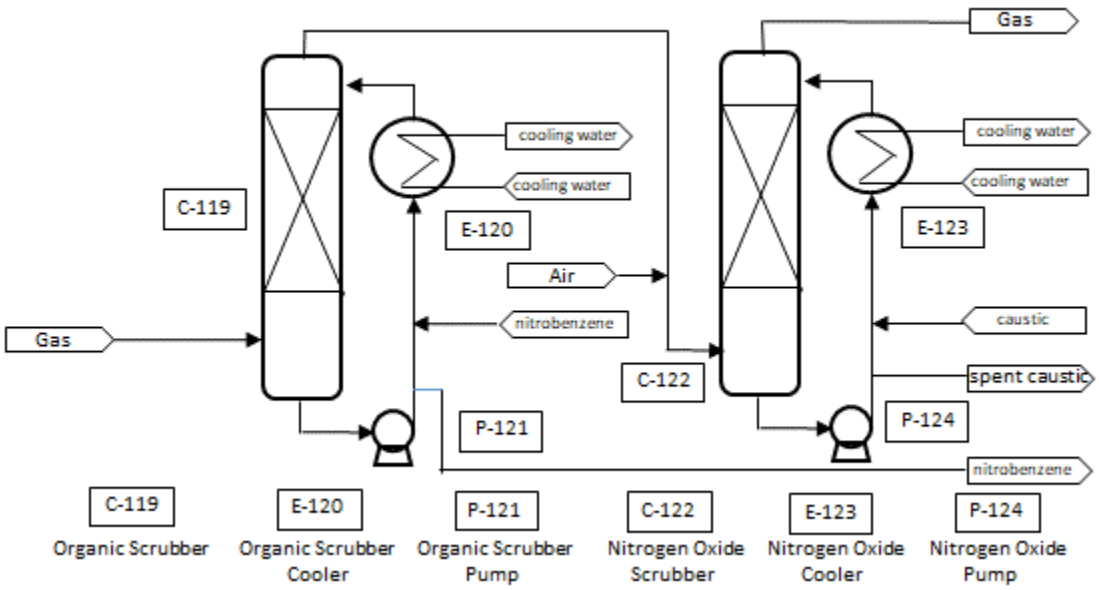

Figure B-6 – Waste Gas Treatment

The water effluents from the process include the condensate from the Evaporator Condenser (E-104), the water from the Benzene / Water Separator (S-116), and the spent caustic solution from the Nitrogen Oxide Scrubber (C-121). The first stream will contain dissolved nitrobenzene and likely acidity, from any entrained acid leaving the Acid Evaporator (F-103). The wastewater from S-116 will contain dissolved benzene. The spent caustic solution from C-121 just needs to be properly neutralized before it can be discharged.

As discussed in section 2.1.5 of Module 2, the water effluent from the process has too much organic content to be discharged, and as discussed above it likely needs a pH adjustment as well. Process options to deal with high organic content in wastewater are described by Smith (13), with steam stripping being a good option for our process. However, even when stripping most of the organic out, it would still likely not meet the required low limits for direct discharge. It becomes apparent that the effluent treatment within the process would involve recovering as much as possible of the nitrobenzene dissolved in the wastewater (i.e., following the second principle of green chemistry – Atom Economy) and effluent neutralization, before send it out for further biological treatment. It is very typical for large chemical complexes to have centralized biological treatment to treat wastewater effluent from different plants. Figure B-7 shows the proposed wastewater treatment steps for the process. Condensate from the Evaporator Condenser (E-

104), water from the Benzene / Water Separator (S-116), and spent caustic solution from the Nitrogen Oxide Scrubber (C-121) enter the Waste Water Tank (T-125). Caustic is also introduced to this tank to neutralize the overall mixed wastewater. The neutralized wastewater is pumped to the Waste Water Stripper (C-127) where indirect steam is added to strip the nitrobenzene and benzene from the wastewater. The stripped nitrobenzene and benzene are condensed and sent back to the process. The stripped wastewater is pumped out to further treatment.

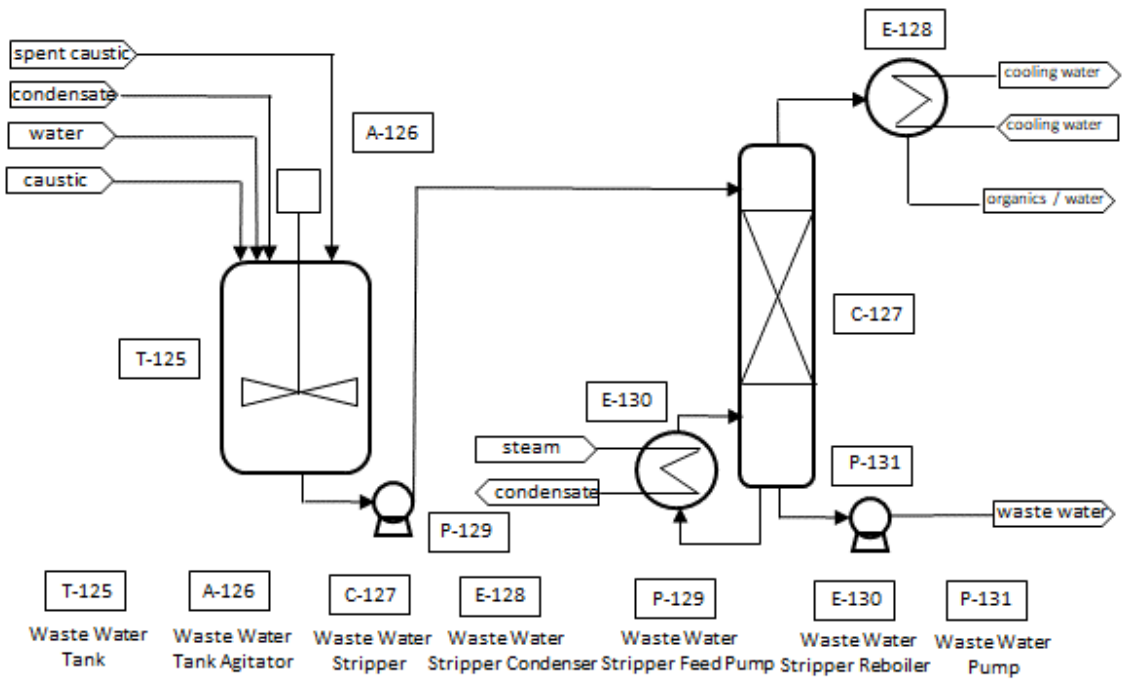

Figure B-7 – Waste Water Treatment

We have now put together the flowsheet for the last block of our BFD (i.e., the Effluent Treatment block).

By now, we have defined most of the unit operations that are required within each block of the BFD of Figure B-2 – the extended BFD of the overall process. The last step for producing an overall flowsheet for the process is to integrate all the process parts defined in Figure B3 to B-7. Let us pay particular attention to the Green Chemistry Principles (GCP) as we integrate the overall process.

Following the GCP, we have so far made the following process decisions:

- We are using part of the by-product water produced in the reactor as the water used to make the caustic solution used to extract nitrophenols from the produced nitrobenzene – GCP #1 / Prevention (i.e., by not using additional water we are decreasing the waste water produced by the process)
- We are introducing a process step to recover the excess benzene used in the nitration reaction – GCP #3 / Atom Recovery (i.e., we are minimizing raw material consumption by recovering and reusing the excess benzene)
- We are using the nitrobenzene produced in the reaction as the solvent to absorb organic vapors present in the waste gas of the process – GCP #5 / Safer Solvents and Auxiliaries (i.e., the introduction of another solvent into the process is avoided. No additional chemicals are added or used)
- We added a stripper to recover the nitrobenzene and benzene dissolved in the wastewater – GCP #3 / Atom Recovery (i.e., we are minimizing raw material consumption by recovering product from the waste stream)

What else should we consider when integrating the individual flowsheets? Here is one more possibility:

- GCP # 6 / Design for Energy Efficiency – For every single flowsheet and for the integrated flowsheet we should add heat integration strategies (i.e., heat exchangers) to minimize the use of energy in the process. These integrations are more obvious once the mass and energy balance for the overall process is developed. So it becomes obvious that an iterative process takes place between the development of the flowsheet and the development of the mass and energy balance.

The integrated flowsheet, developed after a number of iterations, is shown in Figure B-8 – Part 1 and 2. As an example of further considerations that took place in the integration process, a heat recovery scheme was added to recover heat from the nitrobenzene leaving the reactor loop, which in the overall reaction loop decreases the amount of steam used in the Acid Evaporator. The heat is transferred to the benzene feed, and not the nitric acid feed because, following GCP #12 / Inherently Safer Chemistry for Accident Prevention, Guenkel (6) describes that nitric acid and nitrobenzene can react violently when in direct contact, which one can argue it may happen if the interchange springs a leak.

In Figure B-8 numbered diamonds are shown. These are streams numbers which are used to define the mass and energy balance around the flowsheet.

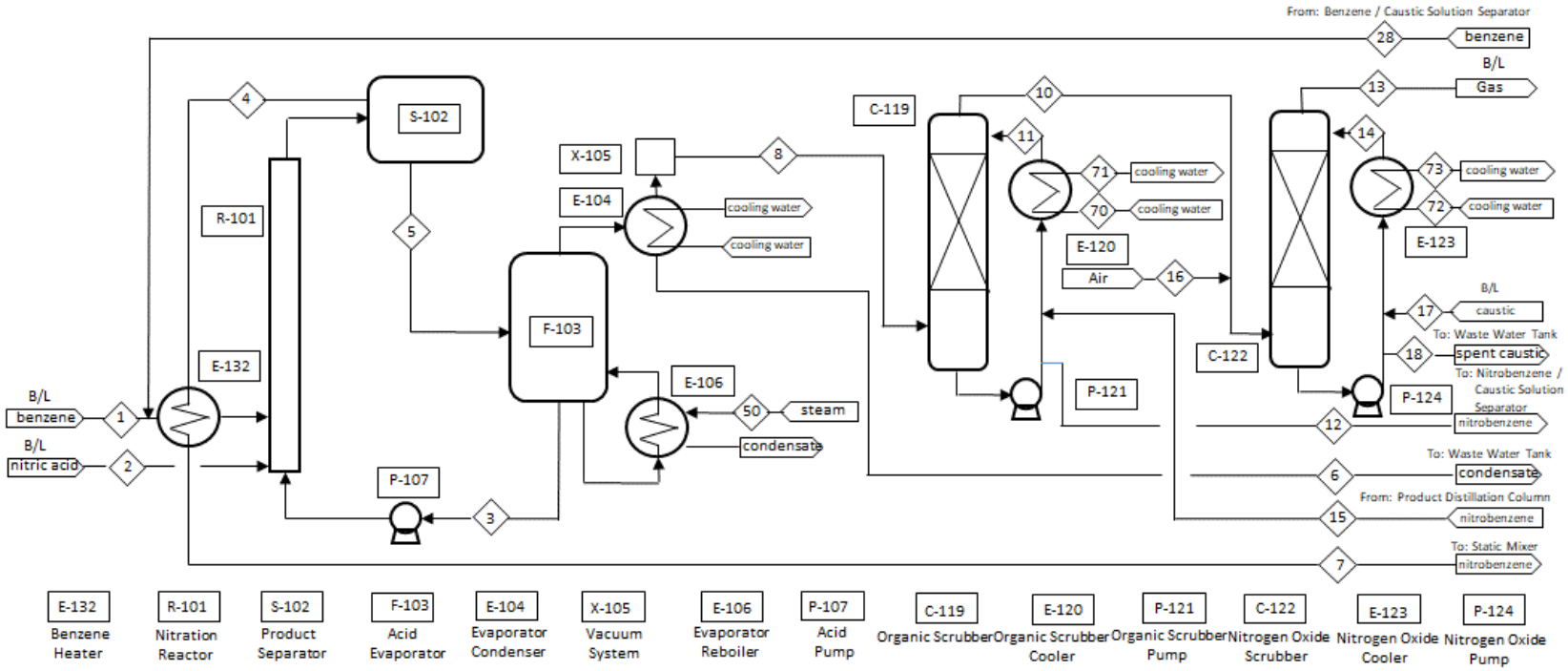

Figure B-8 – Part 1 – Process Overall Flowsheet

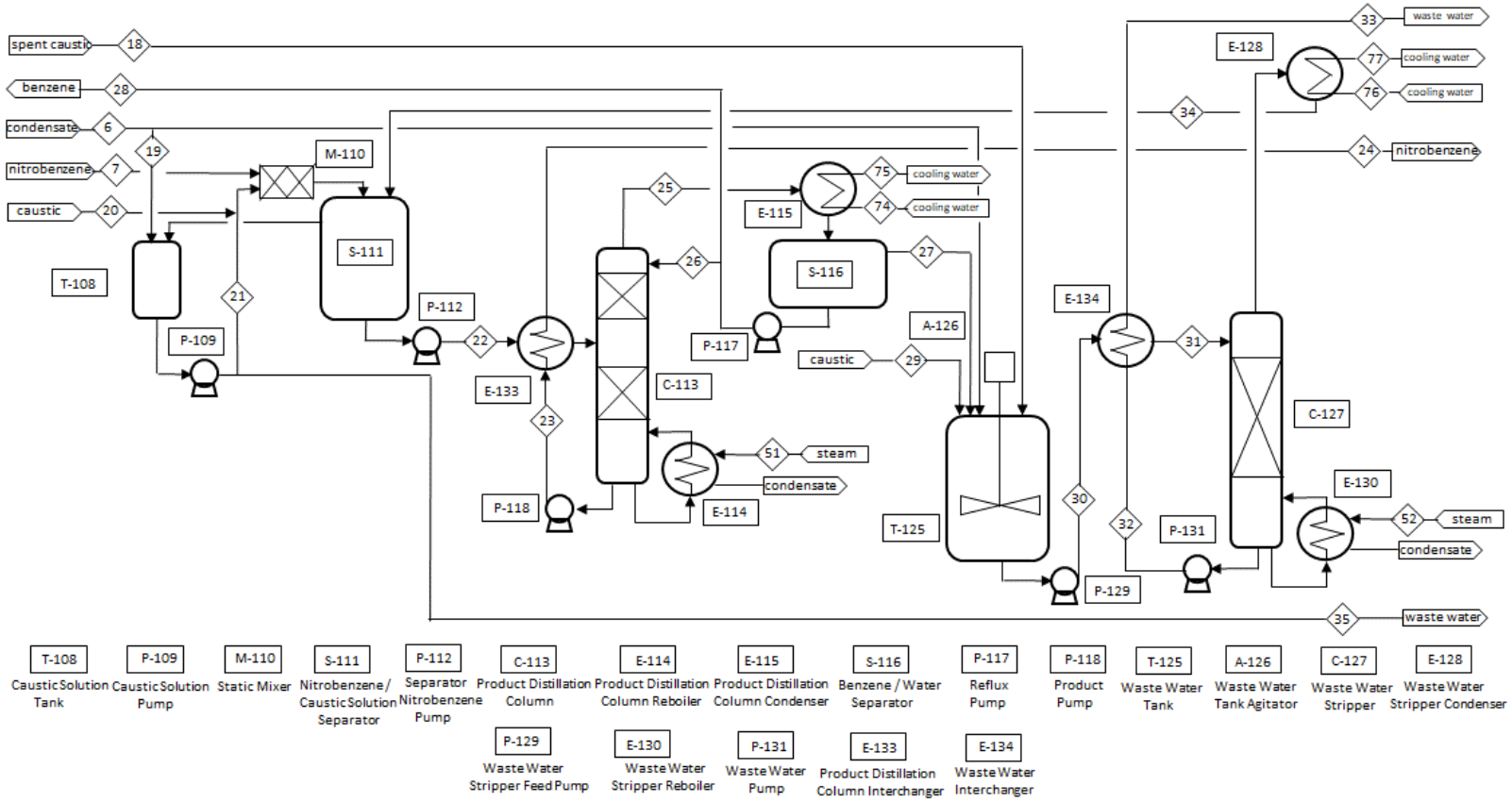

Figure B-8 – Part 2 – Process Overall Flowsheet

The development of the mass and energy balance for the flowsheet developed through this appendix is discussed in the main body of this module.

Let us now look at the incumbent technology. In general, significant changes in reactants types, yields, by-product formation, or energy requirements may lead to significant physical changes to the process. However in the example that we are following, only the amount of by-product formation changes between the incumbent technology and the novel process, and not by much. As a result, the flowsheet for the incumbent technology can be assumed to be the same as the one developed for the novel process.

Appendix C – Equipment Cost Estimates

The equipment cost estimates presented in this appendix were gathered from the following two sources:

- Seider, D.W., et al., 2017. Product And Process Design Principles: Synthesis, Analysis, and Evaluation, page 481, Fourth Ed., Wiley.
- Loh, H.P, et al., 2002, Process Equipment Cost Estimation Final Report, US Department of Energy, National Energy Technology Laboratory.

Table C-1 presents a list of the equipment covered in this appendix. Costs are typically presented for a unique specification, e.g., specific materials of construction. Cost correction factors for other specifications are provided in the different tables of this appendix.

Table C-1 – List of Equipment Covered in this Appendix

Equipment	Source	Equipment	Source
Pressure Vessels	Figure C-1	*Fire Heaters for Specific Purposes*	
Non-Pressure Vessels	Figure C-2	Reformer	Table C-17
Storage Tanks		Pyrolysis	Table C-17
Open	Table C-17	Hot Water	Table C-17
Cone roof	Table C-17	Molten Salt and Mineral Oils	Table C-17
Floating roof	Table C-17	Cooling Towers	Figure C-13
Spherical, 0-30 psig	Table C-17	*Evaporators*	
Spherical, 30-200 psig	Table C-17	Horizontal Tube	Table C-17
Gas holders	Table C-17	Long Tube Vertical (falling film)	Table C-17
Low Pressure Valve Tray Column	Figure C-3	Forced Circulation	Table C-17
High Pressure Valve Tray Column	Figure C-4	Falling Film	Table C-17
Low Pressure Sieve Tray Column	Figure C-5	*Continuous Evaporative*	
High Pressure Sieve Tray Column	Figure C-6	Forced circulation	Table C-17
Low Pressure Packed Column	Figure C-7	Draft-tube baffled	Table C-17
High Pressure Packed Column	Figure C-8	Batch Evaporative	Table C-17
Random Packed Material	Table C-3	Crystallizers	Table C-17
Autoclaves		*Dryers*	
Steel	Table C-17	Batch Tray	Table C-17
Stainless Steel	Table C-17	Direct-heat rotary	Table C-17
Glass lined	Table C-17	Indirect-heat steam-tube rotary	Table C-17
Shell and Tube Heat Exchangers	Figure C-9	Spray	Table C-17
Double Pipe Heat Exchangers	Figure C-10	Centrifugal Pumps	Figure C-14
Air Coolers	Figure C-11	Gear Pumps	Figure C-15
Air-cooled fin-fan	Table C-17	Reciprocating Pumps	Figure C-16
Plate and frame	Table C-17	Electric Motors	Figure C-17
Spiral Plate	Table C-17	Axial Flow and Centrifugal Fans	Figure C-18
Spiral Tube	Table C-17	Centrifugal and Straight-lob Rotary Blower	Figure C-19
Fire Heater Furnace	Figure C-12	Gas Compressors	Figure C-20
Steam Boiler	Table C-17		

Table C-1 (Continuation) – List of Equipment Covered in this Appendix

Equipment	Source	Equipment	Source
Other Drives (than electric motors)		*Conveyors*	
Steam turbines (noncondensing)	Table C-17 & C-16	Belt	Table C-17
Steam turbines (condensing)	Table C-17	Screw	Table C-17
Gas turbines	Table C-17 & C-16	Vibratory	Table C-17
Internal combustion engines	Table C-17	Pneumatic Conveyors	Table C-17
Agitators		*Solid Handling Systems*	
Propeller, open tank		Bins	Table C-17
Propeller, closed vessel	Table C-17	Belt feeders	Table C-17
Turbine, open tank	Table C-17	Screw feeders	Table C-17
Turbine, closed vessel	Table C-17	Vibratory feeders	Table C-17
Power Recovery Turbines		*Size Enlargement*	
Gas expanders (pressure discharge)	Table C-17	Disk agglomerators	Table C-17
Gas expanders (vacuum discharge)	Table C-17	Drum agglomerators	Table C-17
Liquid expanders	Table C-17	Pellet mills	Table C-17
Centrifuges		Pug Mill Extruder	Table C-17
Batch top-drive vertical basket	Table C-17	Screw extruders	Table C-17
Batch bottom-drive vertical basket	Table C-17	Roll-type presses	Table C-17
Vertical auto-batch	Table C-17	Tableting presses	Table C-17
Horizontal auto-batch	Table C-17	*Size Reduction*	
Continuous reciprocating pusher	Table C-17	Gyratory crushers	Table C-17
Continuous scroll solid bowl	Table C-17	Jaw crushers	Table C-17
Hydrocyclones	Table C-17	Cone crushers	Table C-17
Membrane Separation		Hammer mills	Table C-17
Reverse Osmosis, seawater	Table C-17	Ball mills	Table C-17
Reverse Osmosis, brackish water	Table C-17	Jet mills	Table C-17
Gas permeation	Table C-17	*Expressions*	
Pervaporation	Table C-17	Screw presses	Table C-17
Ultrafiltration	Table C-17	Roll presses	Table C-17
Solid Liquid Separator		*Mixers for powder, paste, polymer, doughs*	
Thickener, steel	Table C-17	Kneaders, tilting double arm	Table C-17
Thickener, concrete	Table C-17	Kneaders, sigma double arm	Table C-17
Clarifier, steel	Table C-17	Muller	Table C-17
Clarifier, concrete	Table C-17	Ribbon	Table C-17
Plate and frame filter	Table C-17	Tumblers, double cone	Table C-17
Pressure leaf filter	Table C-17	Tumblers, twin shell	Table C-17
Rotary-drum vacuum filter	Table C-17	*Vacuum Systems*	
Rotary pan	Table C-17	One-stage jet ejector	Table C-17
Wet Classifiers	Table C-17	Liquid-ring pumps	Table C-17
Dust Collectors		Three-stage lob	Table C-17
Bag filters	Table C-17	Three-stage claws	Table C-17
Cyclones	Table C-17	Screw compressors	Table C-17
Electrostatic precipitators	Table C-17	*Adsorption Materials*	
Venturi scrubbers	Table C-17	Activated alumina	Table C-17
Screens		Activated carbon	Table C-17
Vibrating grizzlies	Table C-17	Silica gel	Table C-17
Vibrating screens, 1 deck	Table C-17	Molecular sieves	Table C-17
Vibrating screens, 2 decks	Table C-17	*Waste Water Treatment*	
Vibrating screens, 3 decks	Table C-17	Primary	Table C-17
Bucket Elevator	Table C-17	Primary + Secondary	Table C-17
		Primary + Secondary + Tertiary	Table C-17

Refer to the above sources for correlations that can be used to estimate pricing.

Copyright permission has been obtained to share with appropriate University of British Columbia students.

Appendix D - Engineering Economics

(Courtesy of Dr. Kevin Smith, Chemical and Biological Engineering Department, University of British Columbia)

D-1. INTRODUCTION:

D-1.1 General comments:

In chemical engineering practice, no decision regarding the implementation (or modification) of a process is made without an assessment of the **economic impact** of our decision. The economics we are concerned with are referred to as engineering economics i.e. the micro economics related to a company that allows one to make a decision regarding the process:

Cost estimation - here methods will be presented that allows one to make estimates of capital cost as well as manufacturing cost associated with a project

Economic assessment and decision making - here the costs and benefits of a project are evaluated to provide a measure of the profitability of the project, and using this measure, techniques for decision making are described that are based on the economic measure.

Texts:

1. *Park, C.S., Porteous, K.C., Sadler, K.F. and Zuo M.J., Contemporary Engineering Economics: A Canadian Perspective, Addison Wesley, (1995).*
2. *Riggs, J.L., W.F. Rentz, A.L. Kahl and T.M. West, Engineering Economics - First Canadian Edition, McGraw-Hill Ryerson (1986).*
2. *Ulrich, G.D., A Guide to Chemical Engineering Process Design and Economics, J. Wiley and Sons, (1984).*
3. *Peters, M.S. and K.D. Timmerhaus, Plant Design and Economics for Chemical Engineers (5th Ed.) McGraw-Hill (1991).*

D-2. CAPITAL COST ESTIMATION

D-2.1 Introduction and definition of some terms:

For any new engineering project, be it a new plant or a modification, a certain amount of money must be available for the project to proceed. This money, referred to as the Total Capital Investment (TCI) is needed for the purchase and installation of equipment, all auxiliaries, purchase of land etc, and for the operation of the plant (to pay for feed, labor utilities etc) until

cash flow from product sales is generated. Obviously, a good estimate of the capital cost of a project is essential since this will be one important factor influencing our decision.

Total Capital Investment (TCI) is consequently made up of the **Fixed Capital Investment (FCI) plus the Working Capital (WC),**

TCI = FCI + WC

Direct Costs - costs directly related to the manufacturing process

Indirect Costs - costs not directly related to the manufacturing process but are costs incurred to get the process operating

Table D-1 lists the components making up the direct and indirect costs of the FCI:

Table D-1: Elements of the Fixed Capital Investment (FCI):

DIRECT COSTS	INDIRECT COSTS
1. Purchased equipment (PE) cost	1. Engineering and supervision
2. PE installation	2. Construction expenses
3. Instrumentation and controls	3. Contractor's fee
4. Piping	4. Contingency
5. Electrical equip and materials	
5. Buildings	
6. Yard improvements	
7. Service facilities	
8. Land	

The **Working Capital** will include capital invested in:

1. Raw materials and supplies in stock
2. Finished product in stock and working capital
3. Cash for monthly operating expenses such as wages, utility bills etc
4. Accounts receivable
5. Accounts payable
6. Taxes payable

Typically the WC is 10 -20% of the TCI for most chemical plants.

D-2.2 Scope of the Cost Estimate:

Before proceeding with making estimates of the TCI we must define the scope of the estimate. Usually we are concerned with either a:

Grass Roots Installation - this is also known as a green fields installation and implies that we are dealing with a new plant erected at a new site. Consequently, the estimate must include costs for utilities, laboratory facilities, administration etc.

Alternatively, we may require a:

Battery Limits Installation - a geographical boundary defining the process operations of a specific project is referred to as the battery limits. The battery limits installation will include all the process equipment of the new plant but will exclude facilities that would exist at the plant such as storage facilities, utilities administration and the like.

In large integrated chemical plants there would be many battery limit type installations.

D-2.3 Accuracy of the Cost Estimate:

Once we know the scope of the cost estimate, we need to decide on the required accuracy of the estimate. Obviously the more accurate the estimate desired, the more information will be required to obtain the estimate and the higher the cost of the estimate. Usually at the start of a project during its conceptualization, very little information is available about the project. Consequently the first estimate would be very inaccurate. As the project concept develops and more information becomes available, more accurate cost estimates would be performed. The estimates can be broadly classified as follows, but note that the boundaries between these types of estimates sometimes merge, depending on the problem at hand.

1. **Order-of-Magnitude Estimate** - this estimate is done with the least amount of information and is based on historical data. Usually we use ratios to correct for capacity and time, but no details of the process steps would be required. The cost estimate will only have accuracy in the range +/- 30- 50%.

2. **Study Estimate** - this is usually an economic feasibility estimate done without committing large amounts of money. Usually the major pieces of equipment would have been identified and there

costs determined from historical data corrected for capacity and time using cost charts, capacity ratios, and cost indexes. Accuracy is typically +/-30%.

3. **Preliminary Estimate** - this is also referred to as a budget authorization estimate. It would require a significant amount of information on the process, including a preliminary flow sheet, mass and energy balances. Accuracy is typically +/-20-30%.

4. **Definitive Estimate** - also referred to as a project control estimate and is based on almost complete data including a flow sheet, mass and energy balance, site plan, utilities etc. Accuracy may be +/-20-10%.

5. **Detailed Estimate** - the final estimate based on complete design drawings, site survey, labor by craft. This estimate would be doe only once the project has been approved and would have accuracy +/-10-5%.

Estimates 1-3 are often referred to as pre-design estimates. Details of the components needed for each type of estimate are given in Table 2.

D-2.4 Cost Indexes

Most pre-design cost estimates are based on historical cost data that must be corrected for the effect of time and capacity (or unit size). A number of cost indices are available that track the changes in capital costs as a result of inflation, technology changes and the like.

These indices are useful for correcting estimated plant costs as well as for correcting estimated costs of individual pieces of equipment.

A Cost Index is a number stated for a given year that reflects the cost at that time relative to some base year:

$$C202x = C1982\ I200x/I1982$$

where C202x is the current cost
C1982 is the base year cost (here taken as 1982)
I202x is the cost index value for the year 202X
I1982 is the cost index value for the base year 1982.

A number of these indexes are quoted in, for example, Chemical Engineering Magazine.

These include:

Marshall and Swift Equipment Index (M+S Index):

The process industry equipment index is a weighted average of 8 process industries:

- Cement 2%
- Chemical 48%
- Clay products 2%
- Glass 3%
- Paint 5%
- Paper 10%
- Petroleum products 22%
- Rubber 8%

The index is also reported for each of these industries in addition to the related industries:

- Electrical Power
- Mining, milling
- Refrigerating
- Steam Power

The index is made up of costs for:

- Process or operating machines including tankage and piping
- Power equipment
- Installation labor
- Maintenance equipment
- Administration equipment

Hence the index is used to calculate installed equipment cost. The M+S Index has a basev alue of 100 in 1926.

Chemical Engineering Plant Cost Index:

This index is specific to chemical plants. The index is made up of 4 components each having its own index value. The overall index is weighted as follows:

- Equipment 61%
- Construction Labor 22%
- Buildings 7%
- Engineering and supervision 10%

The equipment index is further weighted as follows:

- Heat exchangers and tanks 37%
- Process machinery 14%
- Pipes valves and fittings 20%
- Process instrumentation 7%
- Pumps and compressors 7%
- Electrical 5%
- Structural support 10%

Note that heat exchangers and tanks would include items such as:

- fabricated equipment
- boilers, furnaces, heaters
- columns and towers
- heat exchangers, re-boilers, condensers
- process drums, reactors, pressure vessels
- storage tanks, evaporators

and process machinery would include items bought off the shelf including:

- centrifuges, mixers, filters
- rotary kilns, dryers, conveyers
- extruders, crushers, grinders
- thickeners, fans and blowers, refrigeration equipment.

The index had a value of 100 in 1957-59.

Other Indexes:

Vatavuk Air Pollution Control Cost Indexes – an index to follow changes in carbon absorbers, catalytic incinerators, electrostatic precipitators and the like. The index has a value of 100 for 1994.

Nelson Refinery Construction and Equipment Inflation Index - this index reflects the construction costs in the petroleum industry.

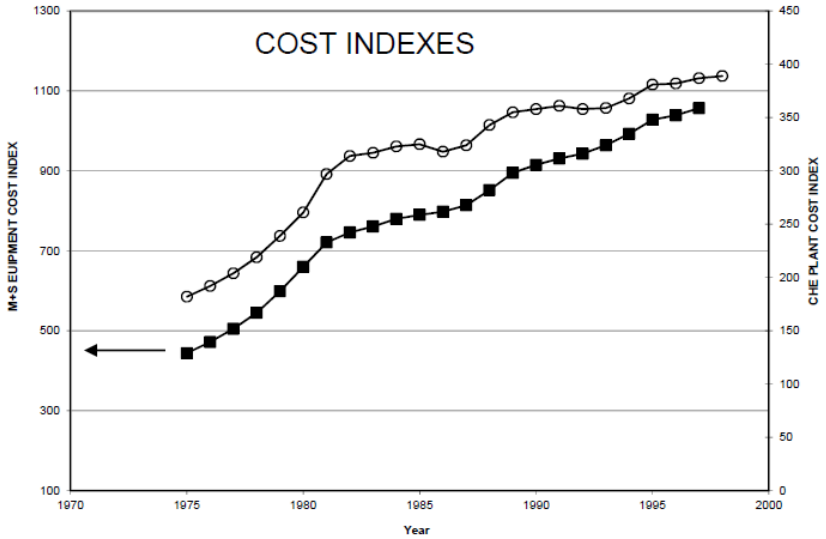

Date	CHE PLANT	M+S
1975	182	444
1976	192	472
1977	204	505
1978	219	545
1979	239	599
1980	261	660
1981	297	721
1982	314	746
1983	317	761
1984	323	780
1985	325	790
1986	318	798
1987	324	814
1988	343	852
1989	355	895
1990	358	915
1991	361	931
1992	358	943
1993	359	964
1994	368	993
1995	381	1028
1996	382	1039
1997	387	1057
1998	389	
1999		

D-2.5 Estimating the Total Capital Investment

D-2.5.1 Ratio Estimates

This method allows us to obtain order-of-magnitude cost estimates. Ratios are used to correct historical data for the effect of time, capacity and location.

The effect of time is accounted for using a current index value relative to the index value for which data are already available. The correction can be made for the whole plant or for each piece of equipment.

The effect of capacity on cost is usually expressed in the form of a power law:

$$C_A = C_B[P_A/P_B]^n$$

where

C_A is the cost of plant A with production capacity PA

C_B is the cost of the base plant B with production PB

P_A is the capacity of plant A

P_B is the capacity of plant B

n is the cost-capacity exponent that typically has a value of 0.6. n <1 reflects the economies of scale achieved with larger capacity plants

Cost-capacity exponents have been published as have factors for location. In the latter case higher costs can be expected when a facility is located in a remote location.

D-2.5.2 Factor Methods:

In these methods the TCI is estimated by multiplying the purchased equipment costs by some factor to obtain the total capital investment. We will consider two factor methods:

- Rule-of-thumb estimates of the elements that make up the TCI that are based on equipment costs
- Lang Factor estimates of the elements that make up the TCI that are also based on equipment costs

The rule-of-thumb estimates are best described by examining each of the components that make up the FCI as were listed in Table D-1.

1. Purchased Equipment Cost:

Usually an accurate estimate of the PE cost is essential since many of the other components of the FCI are taken as some factor of the PE cost. Estimating equipment costs will be discussed in detail in section D-3.

2. Purchased Equipment Installation

The installation costs for equipment include labor, foundations, supports, platforms, construction wiring etc - i.e. costs directly related to the erection of purchased equipment. Usually these are estimated as a function of the PE cost as shown in Table D-3, adapted from reference (3):

Table D-3: Installation cost as a percentage of PE Cost.

Type of equipment	Installation Cost as % of PE Cost
Centrifugal separators	20-60
Compressors	30-60
Dryers	25-60
Evaporators	25-90
Filters	65-80
Heat exchangers	30-60
Metal tanks	30-60
Mixers	20-40
Pumps	25-60
Towers	60-90

Note that there is a wide range for the installation cost which requires some judgement of the best value e.g. if we have no information on the installation we may use a simple arithmetic average, but if we know the installation is in a location where labor costs are high, the we would use the higher values.

Also note that basing the installation cost on the PE cost can lead to significant errors. Consider the installation of a pump which costs 30% of the purchase price. The installation would pay for building a foundation, securing he pump, wiring, testing etc. This cost would be the same whether the pump were made of mild steel or of Monel alloy - yet the purchase price of the latter would be much greater than for mild steel. Consequently, we note that in using the PE cost to estimate installation costs we do not include special alloy costs in the PE price.

3. Instrumentation and Controls

This includes instrument costs, installation labor costs and expenses for auxiliary equipment and materials. Total instrumentation costs are usually 6 - 30% of the PE cost - BUT this will depend on the amount of control needed. For chemical processing plants, a value of 13% is typical.

4. Piping, electrical, buildings and services:

The cost of piping includes labour, valves, fittings, pipe supports and other items involved in the complete installation of all piping used directly in the process. Piping costs can be as high as 80% of the PE cost.

Electrical consists primarily of installation labor and materials for power and lighting. This would include the following:

Power wiring 25-40 % of total electrical cost
Lighting 7 - 25 % of total electrical cost
Transformation 9 - 65 % of total electrical cost
Service 3 - 8 % of total electrical cost

In chemical plants electrical costs are typically 10 - 15% of purchased equipment costs.

Buildings and services consists of expenses for labor, materials and supplies involved in the erection of all buildings connected with a plant. This would include costs for plumbing, heating and ventilation. Typically these costs are 15 - 30% of PE costs.

The costs of buildings and yard improvements are typically 10 - 20% of PE cost whereas services are typically 30 - 80% of PE costs. The following tables provide additional details on these costs.

The Indirect Costs of the FCI are:

1. Engineering and supervision - which includes costs of construction design and engineering, drafting, purchasing/accounting, construction and cost engineering and the overhead for the home office. Typically, these costs amount to 30% of PE costs.
2. The construction expense - which includes the cost of construction tools, construction payroll, taxes and insurance and this will amount to about 10% of total direct costs.
3. The Contractor's fee is usually 1.5 - 6% of the FCI or 2 - 8% of direct plant costs.

4. Contingency - is required to cover the costs of errors in estimates, delays and other unpredictable events. Typically, a value of 5 - 15% of the FCI is required but this may be as high as 20% if a new technology is being used.

Lang Factors:

The simplest factor method is due to Lang who correlated cost data for different classes of plant. The factors multiply the delivered equipment cost to yield either the Fixed Capital Investment (FCI) or the Total Capital Investment (TCI). Note that the delivered equipment cost is typically 1.1 to 1.25 times the PE cost (or FOB cost). Table D-4 gives the Lang factors.

We observe that in general the TCI is four to five time the delivered equipment cost. Similar factors for the components of the FCI and TCI are also available relative to the delivered equipment cost. Table D-5 provides the factors for these components. Note that the factors would be used to calculate the cost of the components making up the TCI whenever we do not have more accurate data.

There are other factor methods that try to improve on Lang's factors. As noted by Cran, for example (Chem. Eng. Magazine, 88 (7), 65-79, 6 April 1981) Lang's factors were developed from a rather limited database. Cran developed a method that uses factors for:

1. equipment costs and direct costs associated with the equipment (FD)
2. instruments costs (FI)
3. indirect costs (FO)

i.e. the improvement is based on the observation that the cost of instrumentation is proportional more to function and type than to the size of the process equipment and that indirect costs are inversely proportional to the size of the plant.(Consider two identical processes one large and one small. Indirect costs for both will be similar; indirect costs will be a smaller fraction of the larger plant).

Hence Cran's formula is:

Total Plant Cost = $EF_D + IF_I + (EF_D+IF_I)\ FO$

where:

E is the total equipment cost

I is the total instruments cost

and the values for the factors were determined from a much larger data base to obtain:

F_D = 2.16 +/- 0.34

F_I = 2.50 +/- 0.25

F_O = 1.36 - 0.073 ln(C_D) +/- 0.15(1.36-0.073 lnC_D)

and C_D is the total direct costs.

Table D-4: Lang Factors

	Factor For	
Type of Plant	**FCI**	**TCI**
Solid processing plant	3.9	4.6
Solid-fluid processing Plant	4.1	4.9
Fluid processing plant	4.8	5.7

Table D-5: Factors for Estimating Components of TCI

	Solid Processing	Solid/Fluid Processing	Fluid Processing
DIRECT COSTS			
Delivered Equipment	100	100	100
Installation	45	39	47
Instrumentation	9	13	18
Piping	16	31	66
Electrical	10	10	11
Building and Services	25	29	18
Yard Improvements	13	10	10
Service Facilities	40	55	70
Land	6	6	6
TOTAL DIRECT PLANT COSTS	264	293	346
INDIRECT COSTS			
Engineering and Supervision	33	32	33
Construction Expenses	39	34	41
TOTAL DIRECT AND INDIRECT PLANT COSTS	336	359	420
Contractors Fee (5%)	17	18	21
Contingency (10%)	34	36	42
FIXED CAPITAL INVESTMENT	387	413	483
Working Capital (15% of TCI)	68	74	86
TOTAL CAPITAL INVESTMENT	455	487	569

D-*2.6 Estimating Equipment Costs*

The previous sections show that most often the TCI is estimated from the equipment costs. Consequently, in determining TCI we must obtain accurate estimates of all major pieces of equipment if we want an accurate estimate of the TCI. In this section, we examine ways of obtaining estimates of various pieces of equipment. Clearly, the most accurate approach to estimating equipment cost is to obtain quotations from vendors, but often, particularly in the early stages of the cost estimation procedure, we may not have sufficient information to obtain a detailed quote or we may require a quick estimate before deciding on proceeding with a more detailed cost estimate. We will examine equipment cost estimates using cost charts as well as using correlation's specific to various pieces of process equipment.

D-2.6.1 Some definitions related to equipment costs:

Equipment costs are often quoted in different ways so it is important to know exactly what services are being quoted. The following definitions provide the details of some common quotation terminology:

1. **F.O.B.** - free on board your shipping company's trailer; you pay for shipping
2. **Delivered Cost** - includes cost of freight, duties and taxes
3. **Installed Cost** - includes cost of uncrating and connecting to existing equipment
4. **Direct Module Cost** - delivered equipment cost plus all material and labor for integral piping, electrical, structural components and installation
5. **Bare Module Cost** - direct module cost plus engineering and field expenses
6. **Total Module Cost** - bare module cost plus contractors fee plus overhead

Some typical values for these costs are:

Delivered equipment cost is 1.1 - 1.3 x's the F.O.B. cost
Installed equipment cost is 1.4 - 2.2 x's the delivered equipment cost

D-2.6.2 Cost Charts

Ulrich has summarized equipment costs in a series of cost charts for different pieces of equipment. The cost charts are based on the mid-1982 Chemical Engineering Plant Cost Index of 315. Consequently, costs estimated from these charts must be corrected to the current time using the current value of the Chemical Engineering Plant Cost Index. In all cases the costs are given as a function of equipment size, such as vessel height and diameter, pump power, heat exchanger surface area etc.

In addition factors for special materials of construction, high pressure operation or other extreme process conditions are given.

The cost charts given by Ulrich also allow one to estimate the Bare Module Costs for certain pieces of equipment using the equipment cost multiplied by the bare module factor which is determined by the materials of construction, operating conditions etc.

Note that use of these cost charts provide only preliminary estimates and they must be used with caution since there are inherent errors and uncertainties associated with their use. These include:

1. Scatter in the data used to develop the correlations is not shown
2. The cost/capacity relations are plotted as continuous curves when they may not be. For example, storage vessels come in finite sizes so that there cost may jump discontinuously - and this is not shown on the charts
3. The prices are list prices - actual negotiated selling price may be significantly lower
4. The prices are quoted in US$ for purchase in the US. There is uncertainty associated with the mark-up from extra profits to local agents, freight etc.
5. In some cases rapid technological changes can make the charts obsolete – of particular importance in instrumentation for example.

The cost charts presented by Ulrich are for equipment needed for large scale operations. For smaller scale equipment as used for example in pilot-scale operations, charts for heat exchangers, pumps, distillation columns, packed towers etc. have been published in Chemical Engineering, November 21, 1988.

D-2.6.3 Costing Process Equipment:

Refer to Appendix C

D-3. Total Product Cost Estimation

D-3.1 Introduction and Definitions

We have examined the components of the Total Capital Investment of a project. This cost is usually paid off over time and it is a one-time cost. Paying off the capital is one component of the total cost to manufacture a product. We need to be able to calculate the Total Product Cost since this, together with the selling price of the product, will enable us to make a decision regarding the project profitability.

The **Total Product Cost** is made up of the **Manufacturing Cost** plus the **General Expenses**.

The Manufacturing Cost is equal to the **Direct Production Costs**, plus **Fixed Charges**, plus **Plant Overhead Costs**.

The General Expense is made up of the **Administrative Costs** plus **Distribution and Selling Costs** plus **Research and Development**.

Each of these terms can be defined as follows:

I. Manufacturing Cost

All expenses directly related to the manufacturing process or the physical equipment of a process plant itself are included in the manufacturing costs. These are usually classified as:

I.A. Direct Production Costs

Expenses directly related to the manufacturing operation. Includes raw materials, operating labour, maintenance, power, utilities etc. Most importantly, direct production costs vary according to the plant production rate.

I. B. Fixed Charges

Expenses that do not vary from year to year and are not a function of the plant production. This would include property taxes, insurance, depreciation etc.

I. C. Plant Overhead Costs

This includes the costs for general plant upkeep, payroll overhead, packaging, storage facilities, safety and protection, laboratories and the like.

Note that (I.A + I.B.) is also referred to as **Indirect Production Costs**.

II. General Expense

The expenses incurred as a result of operating a corporate entity. They would include:

II.A. Administrative Expenses

This would cover executive and clerical wages, office supplies and office communication costs

II.B. Distribution and Marketing Expenses

Expenses incurred from selling and distribution the product, including shipping, sales person salaries, advertising etc.

II.C. Research and Development

The R&D that is necessary to maintain a competitive position in the market.

II.D. Financing

This covers the interest paid on borrowed money. Sometimes this cost may be considered a fixed charge.

and

Total Product Cost = **Manufacturing Cost** + **General Expense**

In estimating the components of the Total Product Cost (TPC) we would use the most accurate data available. Table D-7 provides some typical values for each of the components. We now turn to making more accurate estimates of the Total Product Cost.

Table D-7: Components of the Total Product Cost

	Cost	Estimate
I	**Manufacturing Cost**	
I.A	**Direct production costs**	60% of TPC
	1. Raw materials	10 - 50% of TPC
	2. Operating labor	10 - 20% of TPC
	3. Direct supervisory and clerical labor	10 - 25% of operating labor
	4. Utilities	10 - 20% of TPC
	5. Maintenance and repairs	2 - 10% of FCI
	6. Operating supplies	10 - 20% of maintenance
	7. Laboratory charges	10 - 20% of operating labor
	8. Patents and royalties	0 - 6% of TPC
I.B	**Fixed Charges**	10 - 20% of TPC
	1. Depreciation	about 10% of FCI
	2. Local taxes	1 - 4% of FCI
	3. Insurance	0.4 - 1% of FCI
	4. rent	8 - 12% of rented land/bldgs
I.C	**Plant Overhead Costs**	5 - 15% of TPC
II	**General Expenses**	
II.A	**Administrative Cost**	2 - 6% of TPC
II.B	**Distribution and selling costs**	2 - 20% of TPC
II.C	**Research and Development**	2-5% of sales or 5% of TPC
II.D	**Financing**	0 - 10% of TCI
	TOTAL PRODUCT COST	**I + II**

D-3.2 Estimating the Components of TPC

In this section some guideline for estimating the components of TPC are described.

D-3.2.1 Raw materials

In the chemical industry this is one of the major contributors to the total product cost. The cost of raw materials is usually difficult to estimate since for very large scale plants these costs are determined by long term contract. Listed wholesale prices are published regularly (for example see *Chemical Week*, *Chemical Marketing Reporter*) among others.

Table D-8 provides a list of prices for 1995 for some common commodity chemicals. Note that freight and transportation costs must be added to the raw materials cost.

Table D- 8: 1995 Prices for some commodity chemicals

Chemical	**Price (US$)**	**Price US$/lb**
Sulfuric acid	75/ton	0.038
Ethylene		0.26
Ammonia	230/ton	0.12
Sodium hydroxide (50% liquid)	315/ton	0.16
Nitric acid	125/ton	0.11
Propylene		0.19
Formaldehyde		0.18
Benzene	1.10/gal	0.15
Polystyrene		0.45
Polyethylene (LDPE)		0.56
Polyethylene (HDPE)		0.47

D-3.2.2 Operating Labor

In preliminary cost estimates we can use published labor costs or use data from company experience. An exponent of n=0.2-0.25 is often used for capacity corrections of labor requirements. If the process is established and operating the raw material requirements and labor costs are generally available e.g. in Hydrocarbon Processing.

Typical labor requirements for process equipment, given by Peters and Timmerhaus are shown in Table D-9. Alternatively, the rule-of-thumb requirement can be used in the absence of other information (Table D-10).

Labor rates are highly dependent on location of the plant as well as the labor skill. Some typical rates in the US (1990) are as follows:

Supervisor US$28/hr
Operator US$21/hr
Helper US$17.40/hr

In addition a labor burden of 25% must be added to these rates.

Note that in calculating annual labor costs the number of days of operation varies and this must be accounted for in calculating the labor requirement. Most plants operate for less than a full 365 days per year. This is due to statutory holidays, maintenance and unexpected shutdowns. This may account for +/- 20 days of no operation i.e. an onstream factor of 340/365 = 93%. On stream factors vary from about 90 - 95% in many chemical industries. Note that if the on-stream factor is 91.3% then there would be 8000 operating hours per year. If the operating labour cost is $25/hour (including benefits) then the operator cost per year would be $200,000 year. If each operator worked 8 hrs/day, 5 days per week for 49 weeks per year (i.e. 1960 hrs/year) we would require 4 operators (8000/1960) for the process.

Table D-9: Typical Labor Requirements for Some Process Equipment

Type of Equipment	Workers/unit/shift
Dryer, rotary	1/2
Dryer, spray	1
Centrifugal separator	1/4 - 1/2
Crystallizer	1/4
Vacuum filter	1/8 - 1/4
Evaporator	1/4
Batch reactor	1
Continuous reactor	1/2
Steam plant (100,000 lb/h)	3

Table D-10: Rule-of-thumb Labor Requirements

Plant types	# employee hrs/ton
Fluids processing	1/3 - 2
Solid/Fluid processing	2 - 4
Solids processing	4 - 8

D-3.2.3 Power and Utilities

The cost of power and utilities will very much depend on the amount consumed and the location of the plant. Utility costs can generally be easily established for a particular location. Alternatively, they can be calculated. For example, Ulrich has provided a number of formulae for estimating utility costs (see Table 6.3 included here). Some US utility costs are also summarized in Table D-11 (1990 costs).

Table D-11: Rates for various utilities

Utility	Cost, US$, 1990
Steam, 500 psig	$3.25 - $3.90/1000lb
Steam, 100 psig	$1.50 - $3.20/1000lb
Process water	$0.35 - $1.50/1000lb
Compressed process air	$0.06 - $0.20/1000cuft(STP)
Natural Gas	$2.40 - $3.75/1000 cuft
Electricity	0.035 - 0.13 kWh

D-4. Economic Analysis and Assessment

D-4.1 Interest Calculations and the Time Value of Money

We have described procedures to obtain estimates of the Total Capital Investment and the Total Product Cost of a particular process, process modification etc. In most cases, the purpose of our economic study is to make a decision regarding the profitability of a particular process and/or to choose the best process among a series of options. The definition of best process is most often based on economic criteria although technological, social and political issues may also play a role.

Being able to estimate the capital and operating costs does not allow us to make a real decision about the process because we do not yet know how to combine the one time capital expenditure with the continuous operating costs. This point is illustrated by the following example:

A boiler is to be used to raise process steam - should we fire it with oil or coal given the following costs:

	Oil Fired	Coal Fired
Fixed Capital Investment	$100,000	$400,000
Operating cost per year	$325,000	$250,000

The question is - does the cheaper fuel cost for coal offset the higher initial capital cost of the coal-fired boiler. Note that in the case of the oil-fired unit, the $300,000 capital savings could have been invested and these earnings may make the oil fired option more attractive.

The above example identifies two important concepts that we need to make decisions in engineering economics. The first is the idea of cash flows i.e. the cumulative amount of money inflow or outflow from the company. Secondly, the cash flows occur at different times and since money has a time value we cannot make simple comparisons among cash flows that occur at different times.

The time value of money is easily demonstrated - suppose we need $1000 in 5 years time to pay for the replacement of a pump. We can place some lesser amount in an investment now so that this amount plus the interest we earn in the next five years ensures that we have the needed $1000 five years hence. Consequently, we can view money as a resource which generates income.

D-4.1.1 Time Value of Money - Interest

Money is a resource that generates income by being loaned and from which we receive payments on the principal amount and payments of interest. There are various ways in which the interest payments are set.

Simple Interest:

In this case equal interest payments are made according to the equation:

$$I = P * i * n$$

where

I is the amount of interest

P is the present value loaned or principal amount
i is the interest rate per period
n is the number of interest periods

Eventually the principal must be repaid - thus the total amount due after n interest periods is:

$$S = P + I = P(1+i*n)$$

Hence S represents the future value of the principal amount P after n interest periods.

Compound Interest

In simple interest calculations the amount of interest paid is the same whether you pay at the end of each time unit or after many time units. However, interest also has a time value i.e. if the interest were paid after each period the receiver could use this money as a resource to earn more income. Compound interest takes this factor into account by requiring payment at the end of each time unit. If payment is not made the interest due is added to the principal and interest is charged on this total in the next period. The compound interest can be simply calculated:

Time Period	Principal at the Start of the Period	Interest During the Period	Compound Amount at the End of the Period
1	P	$P \times i$	$P(1 + i)$
2	$P(1 + i)$	$P(1 + i) \times i$	$P(1 + i)(1 + i)$
3	$P(1 + i)^2$	$P(1 + i)^2 \times i$	$P(1 + i)^2(1 + i)$

Clearly we can see that the future value (S) of the principal amount is given by:

$$\mathbf{S = P(1 + i)^n}$$

where $(1 + i)^n$ is known as the **discrete single payment compound interest factor**. The factor determines the value of the single future payment from an amount invested now.

We can represent the formula on a simple cash flow diagram, drawn from the point of view of the lender, as follows:

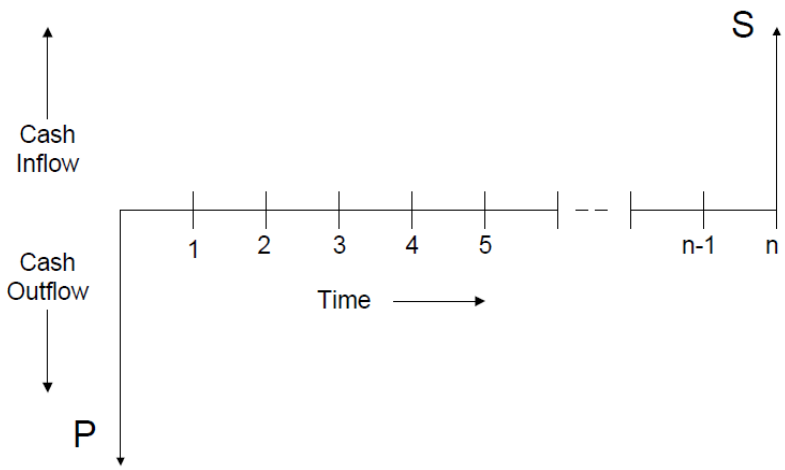

Note that the compound interest formula allows us to calculate the present value or present worth of a future payment S simply as:

$$\mathbf{P = S/(1+i)^n}$$

i.e. the future payment S must be discounted or reduced by the single sum present worth factor.

Nominal and effective interest rates

Usually the period for interest is assumed to be 1 year. However, in some cases the period for the interest calculation may be less than 1 year even though the interest rate is stated as 10% per year. Suppose the nominal rate is 10% per year but the interest is compounded every 3 months. Then for each $1000, the amount due after one year is:

$$S = (1 + 0.10/4)^4$$

i.e. the effective interest rate is 10/4% per 3 month period. Hence

$$S = \$1103.81$$

Thus the nominal rate is 10% per year but since the interest is compounded quarterly the effective rate is 10.38%.

In general terms:

r = nominal interest rate

m = number of interest periods per year

i = r/m

Then $S1 = P(1+i)^m$

$S2 = [P(1+i)^m](1+i)^m = P(1+i)^{2m}$

and hence

$Sn = P(1+i)^{nm}$

i.e. the number of payments in n years is mn.

The formula for the effective rate of interest can be calculated as follows

$P(1+i_{eff}) = P(1+i)^{nm}$

i.e. $(1+i_{eff}) = (1+i)^m$

Hence $\mathbf{i_{eff} = (1+r/m)^m - 1}$

Continuous interest compounding

In this case, interest periods per year approach infinity (e.g. daily compounding) and interest is compounded continuously. By applying the limit as x => 0 of $(1+X)^{1/x} = e$ it can be shown that:

$\mathbf{S = Pe^{rn}}$

And $\mathbf{i_{eff} = e^r - 1}$

D-4.1.2 Annuities

The above formulae allow us to calculate the present worth or future worth of a single sum. However, in most cases we need to generalize the above approach to determine the present and future worth of a series of cash flows. A series of equal payments is sometimes referred to as an annuity.

Let R be the periodic uniform payment made during n discrete periods, i is the interest rate per period and S is the total amount of the annuity at the end of n periods i.e. S is the sum of all the accumulated amounts from each payment - it is the future value of the annuity. We can determine S as follows:

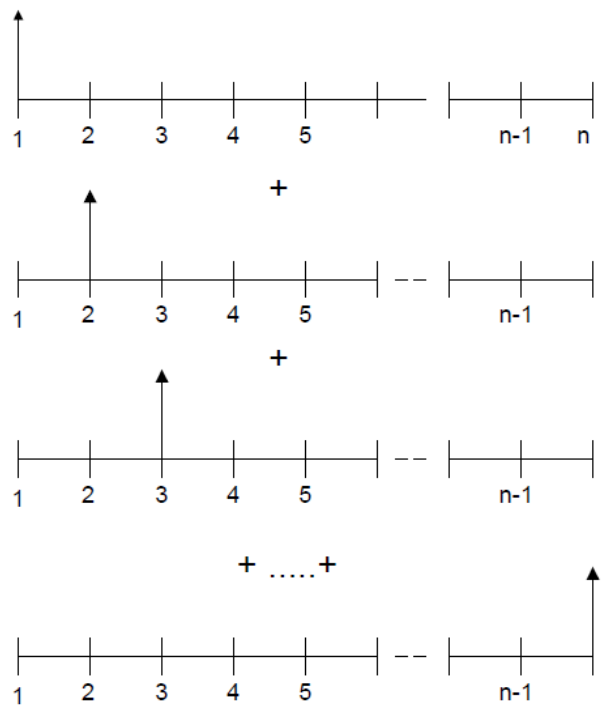

The future value of these periodic payments will be:

$$S = R(1+i)^{n-1} + R(1+i)^{n-2} + R(1+i)^{n-3} + ... + R$$

and by multiplying both side by (1+i) we obtain:

$$S(1+i) = R[(1+i)^{n} + (1+i)^{n-1} + (1+i)^{n-2} + (1+i)^{n-3} + ... + (1+i)]$$

by subtracting these two equations we obtain:

$$S(1+i) - S = R(1+i)^{n} - R$$

or

$$\mathbf{S = R * [(1+i)^{n} - 1]/i}$$

The factor $\mathbf{[(1+i)^{n} - 1]/i}$ is referred to as the discrete uniform series compound amount factor.

The equation tells us that if we invest an amount R each year at an interest rate of i, S is the amount of our investment after n years i.e. the future value of R uniform payments after n years earning i interest per year, is S.

We can easily calculate the present value of the annuity from our previously derived compound interest factor:

i.e. $P = S/(1+i)^n$

so that $\mathbf{P = R * [(1+i)^n - 1]/[i\ (1+i)^n]}$

and the factor $[(1+i)^n - 1]/[i\ (1+i)^n]$ is known as the discrete uniform series present worth factor.

The above formulae may be generalized for the case of different periodic payments i.e. R varies from period to period. Simply:

$$\mathbf{S = \Sigma\ R_k(1+i)^{n-k} \quad for\ k = 1\ ....n}$$

and to determine the present worth of these unequal payments:

$$P = \Sigma\ R_k(1+i)^{n-k}/(1+i)^n$$

or

$$\mathbf{P = \Sigma\ R_k(1+i)^{-k} \quad for\ k = 1\ ....n}$$

D-4.1.3 Some Examples

Example 1:

Suppose your company must pay $2000 per year for fuel costs to run a device for the next five years. if the interest rate is assumed 8%, what is the present value of the fuel costs?

We need to determine P given the equal uniform payments of R = $2000. Hence we use the discrete uniform series present worth factor:

$P = R * [(1+i)^n - 1]/[i\ (1+i)^n]$ with i = 0.08, n = 5 and R = $2000

$P = 2000 * [(1.08)^5 - 1]/[0.08(1.08)^5]$

P = $7985.42

Example 2:

The maintenance cost of a compressor is projected to increase with the following values:

Year	Maintenance Costs paid at the end of year (EOY)
1	$1200
2	$1500
3	$1800

4	$2100
5	$2400

If the interest rate is 10%, what is the present value of these payments and calculate the equivalent annual cost.

In this case the annuity has unequal payments. Thus to determine the present value we use the formula:

$$P = \Sigma R_k(1+i)^{-k} \text{ for } k = 1 \ldots n$$

i.e. P = 1200/1.1 + 1500/(1.12) + 1800/(1.13) + 2100/(1.14) + 2400/(1.15)

P = $6607.48

Now to obtain the equivalent annual cost we must convert the present value of these unequal payments to a series of uniform payments. i.e.

$$P = R * [(1+i)^n - 1]/[i (1+i)^n]$$

is re-arranged to obtain:

$$R = P / [(1+i)^n - 1]/[i (1+i)^n]$$

$$R = 6607.48/([1.1^5-1]/[0.1 (1.1^5)]$$

R = $1743.04

i.e. the unequal annual maintenance costs are equal to annual uniform payments of $1743.04.

The above methods of dealing with the time value of money are at the center of the procedures we use to make an economic assessment of different projects. In addition, these equations are used in analyzing alternative projects and to perform replacement analysis.

D-4.2 Economic Assessment

D-4.2.1 Present Worth Analysis

In this method of assessment, the present worth of cash inflows from the project are compared against the present worth of the cash outflows. The difference is the Net Present Worth (Value) of the project and obviously a positive value is desired.

Net Present Worth = Present Worth Benefits - Present Worth Costs

To make this assessment note that the interest rate must be defined to take account of the time value of money. Using an appropriate interest rate is important in this calculation and often the value is determined by the company cost of capital. We will discuss the issue of cost of capital in a later section.

The method is demonstrated using the base case of the feasibility study.

Example:

Case 1 of the feasibility study assumed a capital cost of $15 million for the phosphoric acid purification plant. The annual operating costs are $1,028,300. The revenues come from the sale of the uranium produced and for the base case the production rate is 26476.9 kg per year with a selling price of $26/kg U. Assuming an interest rate of 8% and a 15 year operation period, calculate the Net Present worth of the project.

In this simple example, we will first assume the capital is all spent in year zero. The operating costs are assumed uniform over the life of the project. The benefits are also assumed uniform over the life of the project and amount to 26476.9 * $26 = $688,400. Hence with i = 0.08 and n = 15 years:

Present Worth Costs (PWC) = $15,000,000 + $1,028,300 * $[(1+i)^n - 1]/[i (1+i)^n]$

PWC = $15,000,000 + $1,028,300 * 8.55948

PWC = $23,801,712

Present Worth Benefits (PWB) = $688,400 * $[(1+i)^n - 1]/[i (1+i)^n]$

PWB = $5,892,345

Consequently the Net Present Worth (Value) is

NPW = $5,892,345 - $23,801,712

i.e. **NPW = -$17,909,367**

Note that if we assume the capital is paid over the initial two years in amounts of $6,000,000 and $9,000,000 respectively, then the analysis period is 17 years and the calculation must be modified. The appropriate cash flow diagram is as follows:

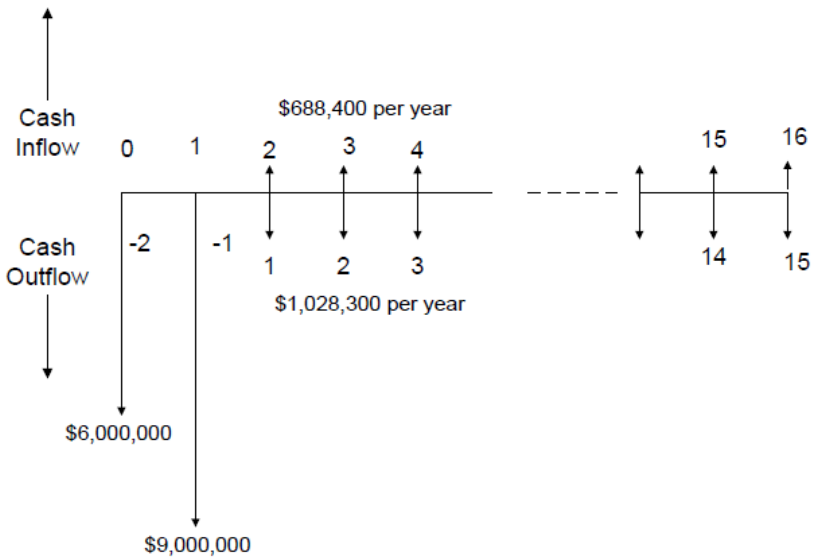

Hence to calculate the Present Worth at year -2 we have:

PWC = \$6,000,000+\$9,000,000/(1.08^1)+{\$1,028,300 * $[(1.08)^{15}$- 1]/$[0.08(1.08)^{15}]$}/1.08

[Note: the last term is divided by 1.08 to refer the cash flows to present value with year -2 as year zero].

i.e. PWC = \$6,000,000 + \$9,000,000/(1.08)+ \$1,028,300 * 7.338373

PWC = \$22,483,067

and

PWB = \$688,400 * $[(1.08)^{15}$ - 1]/$[0.8\ (1.08)^{15}]$/1.08 = \$5,455,875

Hence

NPW = -\$17,027,191

[Note: the answer provided in the feasibility study for this case is -\$17,118,818. However, the feasibility study spreadsheet has assumed 16 years of operation instead of 15.]

Note that this example highlights an important assumption that is made in our interest calculations, i.e. we assume in all the calculations that the cash flows occur at the end of the year or period. Hence in all calculations the year zero cash flows occur at the end of year zero and

therefor are not discounted. Present value refers to the value at the end of year zero. Hence, in the above example year zero refers to the end of year -2.

D-4.2.2 Annual Worth Method

In this approach, we resolve the cash flows into an equivalent uniform annual cost (EUAC) or benefit (EUAB). If we have a series of different cash flows then we calculate the present worth of the cash flows and convert them to a series of uniform annual costs or benefits using the discrete uniform series present worth factor ($R = P * [(1+i)^n - 1]/[i (1+i)^n]$).

To demonstrate we can calculate the EUAC for the previous example:

$$EUAC = \$17,027,191 / ([(1+i)^n - 1]/[i (1+i)^n])$$

i.e.

$$EUAC = \$17,027,191 / ([(1.08)^{16} - 1]/[0.08 (1.08)^{16}])$$

EUAC = $1,839,239

Hence the project would cost $1,839,239 per year over the seventeen year life of the project.

D- 4.2.3 Discounted Cash Flow Rate-of-Return Method

In both the NPW and EUAC/EUAB methods described in the previous sections, the interest rate on which to base the analysis must be known. Often the most appropriate value to use for the life of a project is not known, particularly for a large scale capital project that may have a life well in excess of 10 years. The discounted cash flow rate-of return method (DCF ROR) of analysis avoids this problem by determining the value of the interest rate (iROR) that satisfies the condition:

PW of the benefits = PW of the costs

for the project under consideration. Alternatively, we define i_{ROR} as the interest rate that satisfies the condition:

Net Present Worth (NPW) = 0

The ROR analysis is probably the most widely used analysis technique in industry. Its major advantage is that it gives a readily understood figure of merit and it does not require the interest rate to be defined. Note that i_{ROR} essentially gives the interest that the capital expenditure will earn over the life of the project.

Proceeding with the same example as before we must obtain i_{ROR} such that:

PW of the benefits = PW of the costs

Now

PW costs = \$6,000,000 + \$9,000,000/(1+i)+ \$1,028,300 * $[(1+i)^{15}- 1]/[i(1+i)^{15}]/(1+i)$

and

PW benefits = \$688,400 * $[(1+i)^{15} - 1]/[i (1+i)^{15}] /(1+i)$

Setting these two equations equal and solving for i (by trial-and-error if needed):

Interest	PW Costs	PW Benefits	NPW
0.999	1.101716E+07	6.890679E+05	-1.032809E+07
0.8	1.171399E+07	8.603725E+05	-1.085362E+07
0.6	1.269522E+07	1.146338E+06	-1.154888E+07
0.4	1.425302E+07	1.709937E+06	-1.254308E+07
0.2	1.750649E+07	3.218595E+06	-1.428790E+07
0.1	2.129212E+07	5.236025E+06	-1.605609E+07
0.001	3.027752E+07	1.024386E+07	-2.003366E+07
-0.1	6.006763E+07	2.655115E+07	-3.351649E+07
-0.2	1.934859E+08	9.438552E+07	-9.910037E+07
-0.4	9.129264E+09	3.658541E+09	-5.470723E+09
-0.6	3.990353E+12	1.068536E+12	-2.921817E+12
-0.8	1.961327E+17	2.626038E+16	-1.698723E+17
-0.999	1.029329E+54	6.890891E+50	-1.028640E+54

This example shows one of the difficulties in finding the correct solution to the equation defining i_{ROR}, i.e. PW of the benefits = PW of the costs. In this case there is no meaningful solution in that for $0<i<1$ the equation is never satisfied. However, the project has no rate-of-return - the project costs us money even when the interest rate is zero, and so obviously this project would not be considered as economically viable.

Note that when solving for i_{ROR} it is also possible that we obtain more than one solution. This occurs since the NPW equation is equivalent to:

$$NPW(i) = A_0/(1+i)^0 + A_1/(1+i)^1 + A_2/(1+i)^2 + ... + A_N/(1+i)^N = 0$$

and this equation will have N roots. However, not all roots will be real and not all will be within the range $-1<i<\infty$.

D-*4.3 Analysis of Alternatives*

In this section, a number of different techniques are described that are useful for making decisions regarding the choice among a number of mutually exclusive alternatives. The methods can be used to examine alternative large scale projects, or simply to examine alternatives among a single piece of equipment such as a pump.

D-4.3.1 Present Worth Analysis

In this method, the Net Present Worth (NPW) of various alternative cash flows is calculated and the project with the highest value is chosen. In this method, there are three basic situations or scenarios each with a different criterion for choosing among the alternatives:

	Scenario	Present Worth Criterion
1	Fixed input	Maximize the PW of the benefits
2	Fixed output	Minimize the PW of costs
3	Neither input or output fixed	Maximize the NPW

In scenario (1), a fixed input may refer to, for example, an equal $1 million investment that can be made in either Plant A or Plant B.

In scenario (2), a fixed output may require the supply of 1 million BTU/hr at 900F using either a gas burner or an oil fired burner.

In scenario (3) we may have to choose between two different control systems each having different costs and different benefits.

Example:

A company is considering installing alternative scales to weigh out a crystalline product. Both scales allow better control over the bag filling operation than the current scales and yield benefits because of less overfilling. If the scales last 6 years and the interest rate is 8% p.a., which is the better choice based on the following data:

	Cost	Annual benefit	Salvage Value
A	$20,000	$4,500	$1,000
B	$30,000	$6,000	$7,000

In this case nether inputs nor outputs are fixed so we base the analysis on the NPW.

For Scale A:

PW benefits = $R * [(1+i)^n - 1]/[i (1+i)^n] + S/(1+i)^n$

$= \$4,500* [(1.08)^6 - 1]/[0.08 (1.08)^6] + 1000/(1.08)^6$

PW benefits = $21,433

Note that the salvage value is also considered a benefit since it returns cash to the company.

The PW cost is simply $20,000. Hence

NPW of Scale A = $1,433

For Scale B:

PW benefits = $R * [(1+i)^n - 1]/[i (1+i)^n] + S/(1+i)^n$

$= \$6,000* [(1.08)^6 - 1]/[0.08 (1.08)^6] + 7000/(1.08)^6$

PW benefits = $32,148

Note that the salvage value is also considered a benefit since it returns cash to the company.

The PW cost is simply $30,000. Hence

NPW of Scale A = $2,148

Hence based on our selection criterion we would choose Scale A.

In the present worth analysis example we have assumed that the analysis periods are equal for each alternative and that the useful life of the equipment is equal to the analysis period. In many cases this is not true simply because alternative equipment may not have the same useful life.

One approach to perform an analysis of alternatives using the NPW approach even when the useful life is different , is to simply consider replacement of the equipment with the shorter useful life. This approach assumes we can replace the equipment for the same amount as the initial

cost. Also, we require the useful lives to be reasonable multiples of each other (e.g. 3 years and 2 years would require a 6 year period, but a 5 year and 7 year life for the two alternatives would require a 35 year analysis period - hardly practical).

Example:

Suppose we must choose between alternative 1 and 2 below with i = 0.07:

	Cost	Useful Life	Salvage Value
1	$9,000	5 years	$2,000
2	$16,000	10 years	$3,250

For alternative #2:

PW costs = $P - S/(1+i)^n$

$= \$16,000 + 3250/(1.07)^{10}$

= $14,348

For alternative #1 we would have to consider replacing the equipment after 5 years i.e. at the end of the fifth year we incur another cost of $9,000 but receive $2,000 in salvage from the old equipment. Hence

PW costs = $\$9,000 - (-9000+2000)/(1.07)^5 - 2000/(1.07)^{10}$

= $11,541

Hence we would choose alternative #1.

D-4.3.2 Annual Worth Analysis

One of the difficulties with the analysis of alternatives using the NPW method is deciding on the analysis period. The annual worth method avoids this problem if there is a **continuing requirement**. We can use the annual worth method even if the life of the alternatives are not simple multiples.

In a similar fashion to the NPW method some basic situations arise:

	Scenario	Annual Worth Criterion
1	Fixed input	Maximize the EUAB
2	Fixed output	Minimize the EUAC
3	Neither input or output fixed	Maximize the (EUAB-EUAC)

The approach to calculate the EUAB and EUAC was described previously.

Example:

Consider the case of three alternatives being evaluated to improve a particular process. Each has a 10 year life, scrap value of 10% of the original cost. If i = 0.08 which should be chosen based on the following data:

	A	B	C
Installed equipment cost, $	15,000	25,000	33,000
Material + labour savings, $/year	14,000	9,000	14,000
Annual operating expense, $/year	8,000	6,000	6,000
Scrap value at end of life, $	1,500	2,500	2,300

In this case both the benefits and costs vary with each alternative. Therefore we base our choice on the maximum of the (EUAB-EUAC).

	Factor	A	B	C
EUAB				
Material + Labour	1	14,000	9,000	14,000
Scrap	$S/\{([(1+i)^n - 1]/[i\ (1+i)^n])\}/(1+i)^n$	103.5	172.6	227.8
TOTAL EUAB		14,104	9,173	14,228
EUAC				
Equipment	$P/\{[(1+i)^n - 1]/[i\ (1+i)^n]\}$	2235	3725	4918
Operating expense	1	8000	6000	6000
TOTAL EUAC		10,235	9,725	10,918
EUAB-EUAC		**3869**	**-552**	**3310**

Factor A B C
Note: $\{[(1+i)^n - 1]/[i\ (1+i)^n]\} = 6.711$ and $\{([(1+i)^n - 1]/[i\ (1+i)^n])\}/(1+i)^n = 14.493$

Consequently, we would choose alternative A. Note that it would be better to do nothing than choose B since this loses money.

D-4.3.3 Rate-of-Return Method

In this method we proceed to calculate the ROR for the project as defined previously i.e. i_{ROR} such that NPW = 0. When analyzing projects by this method, we refer to the Minimum Acceptable Rate of Return (the MARR) for a company. The MARR would usually be greater than the cost of borrowing money from the bank or raising capital from other sources and may also reflect the technological status of the project, political environment and other investment risk factors. Hence we calculate i_{ROR} for the project and compare it to the MARR.

In a similar fashion to the other analysis methods some basic situations arise:

	Scenario	Rate-of-Return Criterion
1	Fixed input	Maximize the ROR
2	Fixed output	Maximize the ROR
3	Neither input or output fixed	If both alternatives have i_{ROR}>MARR calc. ROR on difference between alternatives. If i_{ROR} on diffs > MARR choose high cost alternative*

In the case (3) if we are considering more than 3 alternatives we would proceed using incremental analysis as described below.

The ROR criterion are demonstrated and discussed by way of the following example.

Example:

Consider the case where neither inputs nor outputs are fixed. We are required to select one of two alternatives with the following cash flows and a MARR of 10%:

Year	Option 1	Option 2
0	-$10,000	-$20,000
1	$15,000	$28,000

If we simply determine the i_{ROR} for each alternative we obtain:

Option 1: $10,000 = 15,000[(1+i)^1 - 1]/[i\ (1+i)^1]$ which yields i_{ROR} = 50%

Option 2: $20000 = 28,000[(1+i)^1 - 1]/[i\ (1+i)^1]$ which yields i_{ROR} = 40%

If we based our choice only on maximizing i_{ROR} we would choose Option 1. However, i_{ROR} is a percent of the investment. The actual $ amount of the benefit will depend on the $ amount of the

investment. Consequently, we consider the i_{ROR} on the increment needed to make the high cost investment:

Year	Option 1	Option 2	Option (2 - 1)
0	-$10,000	-$20,000	-$10,000
1	$15,000	$28,000	$13,000

For the increment (Option 2- Option 1) we have:

$$10{,}000 = 13{,}000[(1+i)^1 - 1]/[i\,(1+i)^1] \quad \text{which yields } i_{ROR} = 30\%$$

The 30% ROR on the increment is greater than the MARR, hence we choose the high cost alternative.

The analysis of i_{ROR} on the increment is based on the observation that the extra money we must invest for the high cost alternative must have a i_{ROR} > MARR else we would not be justified in spending the extra money. We would rather choose the low cost alternative, provided i_{ROR}>MARR.

Note that for the i_{ROR} analysis method with fixed inputs or outputs, we use identical replacement and a common multiple of the useful life. In the case of neither inputs or outputs fixed, we use an incremental analysis over a common multiple of the useful life with identical replacement. The following example demonstrates the procedure:

Example:

Two machines are available for purchase with the cash flows given in the table below. If the MARR is 10% which option should be chosen.

	Option X	Option Y
Initial cost	$200,000	$700,000
Uniform annual benefit	$95,000	$120,000
Salvage	$50,000	$150,000
Useful Life	6	12

We can first check if the individual projects meet the required MARR:

Option X:

$$\text{PW Benefit} = 95{,}000[(1+i)^6 - 1]/[i\,(1+i)^6] + 50{,}000/(1+i)^6$$

PW Cost = $200,000

Yields by trial-and-error i_{ROR} = 43% >> MARR

Hence Option X is an acceptable alternative.

Option Y:

PW Benefit = $120{,}000[(1+i)^{12} - 1]/[i\,(1+i)^{12}] + 150{,}000/(1+i)^{12}$

PW Cost = $700,000

Yields by trial-and-error i_{ROR} = 13.5% > MARR

Hence Option Y is an acceptable alternative.

Now since neither inputs (costs) nor outputs (benefits) are fixed we perform an incremental analysis. However, since Option X has a useful life of 6 years we must assume equivalent replacement after 6 years. Consequently, the Cash Flow and incremental cash flow is as follows:

Year	Option Y	Option X	Y - X
0	-700,000	-200,000	-500000
1	120,000	95,000	25,000
2	120,000	95,000	25,000
3	120,000	95,000	25,000
4	120,000	95,000	25,000
5	120,000	95,000	25,000
6	120,000	95,000+50,000-200,000	175000
7	120,000	95,000	25,000
8	120,000	95,000	25,000
9	120,000	95,000	25,000
10	120,000	95,000	25,000
11	120,000	95,000	25,000
12	120000+150,000	95000+50000	125000

Hence:

$500{,}000 = 25{,}000[(1+i)^{12} - 1]/[i\,(1+i)^{12}] + 150{,}000/(1+i)^{6} + 100{,}000/(1+i)^{12}$

and solving yields i_{ROR} = 1.3% which is << MARR

Hence we would choose the lower cost alternative. The additional $500,000 investment needed for Option Y does not generate a sufficient return to justify making the investment on this option. It would be better to seek out another opportunity and make the $500,000 investment elsewhere.

D- 4.3.4 Incremental Analysis

In the previous example of the ROR analysis method we considered choosing between two alternatives by analysing the ROR on the difference in cash flows. This approach can be extended to more than two alternatives using the incremental ROR analysis method.

We proceed by ranking the projects in ascending order of initial cost after checking first that all the alternatives individually meet the criterion that i_{ROR} > MARR. Then, we proceed one pair at a time starting from the lower cost alternative, to determine the i_{ROR} on the increment. Provided i_{ROR} on the increment is > MARR, we select the higher cost alternative. The incremental procedure is repeated, thereby checking that the additional investment needed for the higher cost alternative is justified in each case.

Example:

Consider the following example with 5 mutually exclusive alternatives. The MARR is 6% and the life is 20 years. The project have been ranked in order of increasing cost and each project has a ROR > MARR so they are all considered in the incremental analysis.

After each increment a choice is made between the high cost alternative and the low cost alternative.

MARR = 6%
Usefull life = 20 years

	D	B	A	C	E
Initial cost, $	1000	2000	4000	6000	9000
Uniform annual benefit, $ per year	117	410	639	761	785
R.O.R., %	10	20	15	11	6
Increment		B-D	A-B	C-A	E-A
Initial cost, $		1000	2000	2000	5000
Uniform annual benefit, $ per year		293	229	122	146
ROR on the increment, %		29	10	2	<0
Choice		**B**	**A**	**A**	**A**

Note that in each case the increment ROR is calculated from the formula:

$$\Delta Cost = \Delta Annual\ Benefit * [(1+i)^{20} - 1]/[i\ (1+i)^{20}]$$

The final Choice is project A, even though on its own the i_{ROR} of 15% was not the highest among all alternatives. However, project A is the highest cost alternative that meets the requirement that the incremental amount being invested for A meets the MARR requirement. Consequently, we get the highest $ amount returned with option A while still meeting the MARR requirement.

Note that for Option B, the project with the highest ROR, we are better off investing more money (Option A) even if the ROR overall is slightly lower i.e. we want to maximize benefits while ensuring that incremental costs incurred to achieve this have an acceptable rate of return.

D-4.3.5 Other Analysis Methods

There are a number of other methods that are used for financial assessment. These are described briefly here since they are considered of less importance than the methods already described.

Future Worth Method

In this approach, the consequences of investment are converted to a future sum (S) using the interest and annuity formulae already described. This approach is analogous to the present worth method.

Cost-Benefit Analysis

This is essentially what we have already dealt with in the Present Worth method and the Annual Worth method except that the result is expressed as a ratio of benefits to costs and this ratio must be >1 i.e. we calculate:

(PW Benefits)/(PW Costs) or the EUAB/EUAC.

Payout or Payback Period

In this procedure, we examine the payout time for a project defined as:

Payout time = time required for benefits to equal the cost of the investment.

This method is in common use and is most informative when the analysis is based on discounted cash flows. Although the method is appealing, it should be used in conjunction with other methods.

For example, if two alternatives have very similar i_{ROR} then the option with the much shorter payout time would be preferred since it would release money for another investment opportunity. However, if we use the payback period only, it suffers from ignoring all economic consequences beyond the payback time. For example, a project may have a short payout time but an alternative project may payout more ultimately, but pay it later in the life of the project.

D-5. Financial Analysis

In this section of the course, we examine how the performance of a corporate entity is reported in financial statements. In addition, factors that have an important impact on company performance are examined briefly, including depreciation and inflation as well as the impact of taxes.

D-5.1 Financial Statements

The performance of a corporate entity is reported periodically in a set of financial statements that summarize the cash flow within a company. The corporate cash flow diagram illustrates how the company cash generated from sales are utilized within the company. This diagram is important since it also provides the definitions of various cash flow terms as they are often used in industry, and as they will be used in the following sections of the course. Some of the more important definitions are as follows:

Before Tax Cash Flow (BCTF) = Operating Revenue - Operating Costs

Taxable Income (TI) = BTCF - Debt Interest - Depreciation Allowance

Net Income = TI - taxes paid

After Tax cash Flow (ATCF) = BCTF - Taxes paid

The two most important financial statements are the **Income Statement** and the **Balance Sheet.**

The **Income Statement** describes the cash flow in and out of the company over a specific period of time. Usually the income statement is provided for a previous quarter, half-year or year. The

report will show the income from all sources compared to all the operating expenses. In addition, depreciation, interest and taxes for the period will be given. Finally, the net income will show the profitability of the operation for the period in question.

The **Balance Sheet** describes the company net worth at any specific point in time. The balance sheet reports net worth according to the fundamental accounting equation:

Net Worth (Equity) = Total Assets - Total Liabilities

An example of the layout of an Income Statement and Balance Sheet are attached. Both the Income Statement and the Balance Sheet can be examined to determine the company performance. This is often done by way of ratio analysis to measure profitability, stability, liquidity, efficiency and growth. Often these ratios are calculated for a number of years so that changes can be monitored. In addition, it is most useful to compare the values from one company to others in a similar field so that the relative performance of the company can be determined.

An example is provided on the following pages and some of the important ratios are described below:

1. Profitability:

ROI: this is simply the ratio of the net profit after taxes (net income) divided by the average years equity

2. Stability:

Net worth to total assets: this gives the % of assets financed through the owners stock or retained earnings. A high ratio means that it would be easier to borrow money for further asset expansion.

3. Liquidity:

Current ratio - is the ratio of total current assets to total current liabilities. Current assets refers to assests that are readily convertible to cash.

Acid test ratio - is similar to the current ratio but excludes inventory from current assets

Working capital is simply the difference between the current assests and current liabilities. Note that the liquidity ratios can be too high or too low. If the current assets are too high, it implies that the company is not utilizing its cash effectively. Alternatively, if the ratio is low it implies the company may not be able to meet its short term debt obligations.

4. Efficiency:

Fixed assets/sales - if this number is small it means the assets are being used very efficiently. Large sales volumes are being generated by the use of a small amount of assets.

D-5.2 Depreciation

Depreciation is an accounting mechanism employed to describe the decline in value of assets as they are used. In a "going concern" revenues must be sufficient to defray all expenses incurred and to provide for reinvestment in new productive assets and still generate profit for the owners. The depreciation is a way of allocating a series of costs to the investment in assets.

Since depreciation is an expense it will affect the gross profit and the taxable income (see the Cash Flow diagram) and hence the taxes paid. The larger the depreciation expense the smaller the taxes paid. An increased depreciation also increases the cash flow from the project i.e. the net income plus depreciation, since the depreciation expense is not paid outside the company. However, depreciation is also reflected in the balance sheet since fixed assets are reported as the original cost minus the accumulated depreciation expense.

We can think of depreciation as the cash flow to recover the capital cost of the original asset. We would obviously want to recover the cost of capital as quickly as possible i.e. have very large depreciation expense initially, but government regulations limit the amount of depreciation that can be charged as an expense. The laws governing depreciation depend on the tax laws of each country. Here we will describe two common approaches - Straight Line Depreciation and Declining Balance Depreciation.

D-5.2.1 Straight Line Depreciation:

This is the simplest and most widely used procedure. The depreciation charge is taken in equal increments over the life of the project. The annual depreciation charge is given by:

$$d = [V-Vs]/n$$

where

d is the annual depreciation charge

V is the installed cost of the asset

Vs is the salvage value at the end of the asset life

n is the life of the asset.

The book value of the asset at any time t is

$$Bt = V - t\,[V-Vs]/n$$

Often the life of the asset that can be used in depreciation calculations is also determined by government legislation.

D-5.2.2 Declining Balance Depreciation:

In this case, the annual depreciation charge is a fixed fraction f of the book value at the end of the previous year:

Year	Depreciation Amount	Book Value
1	$d_1 = fV$	$B_1 = V\text{-}fV = V(1\text{-}f)$
2	$d_2 = fB_1 = Vf(1\text{-}f)$	$B_2 = V(1\text{-}f)\text{-}Vf(1\text{-}f) = V(1\text{-}f)^2$
t	$d_t = Vf(1\text{-}f)^{t-1}$	$Bt = V(1\text{-}f)^t$

Note that the declining balance depreciation charge will be greater in early years compared to the SLD approach.

D-5.3 Financial Leverage and Income Tax Considerations

The general cash flow diagram given previously showed that both depreciation and interest payments are subtracted from the BTCF (Before Tax Cash Flow) when calculating the taxable income. Consequently, both depreciation and interest give rise to positive cash flow. This can be demonstrated by defining the following variables:

R - annual revenues from operations

C - all costs incurred to earn the revenue

I - interest paid on money borrowed to build facilities

D - depreciation expense

BTCF - is the before tax cash flow

TI - is the taxable income

t - is the fractional tax rate on taxable income

ATCF - is the after tax cash flow

then

$$BTCF = R - C$$

and

$$TI = BTCF - I - D$$

so that

$$ATCF = BTCF - t(TI)$$

$$= R - C - t\,(BTCF - I - D)$$

$$= R - C - tR + tC + tI + tD$$

i.e. $$ATCF = R(1-t) - C(1-t) + tI + tD$$

Even if the revenues and costs are balanced the favorable tax treatment of depreciation and interest payments results in a positive cash flow. This is one reason that there is an incentive to finance at least part of the project using borrowed money.

Financial leverage refers to the extent to which a project is financed through equity verus debt. Financial leverage is defined as the ratio of total debt to total assets. The ratio varies depending on the facility; e.g. public utilities typically have a financial leverage of 60% whereas in the manufacturing industries it may be 30 - 40%. Since an investment is partitioned into equity and debt, when considering the company rate-of-return we consider only the equity portion of the investment. This, together with the favorable tax treatment received by debt, provides a significant incentive to finance a project through debt rather than retained earnings. Of course, financing through debt increases the risk of the project since the company becomes more vulnerable to small changes in revenues or operating costs. This effect is readily demonstrated in the following example:

Example:

An investment of $10,000 has zero salvage after a 10 year life. The BTCF is $3000 per year and the tax rate is 46% with straight line depreciation. Consider the effect of

(a) 100% equity financing

(b) 50:50 equity:debt financing. The laon costs 10%p.a. with the loan repaid at the end of the 10th year

on the rate-of-return for the investment. Also determine the impact of a 50% reduction in the BTCF on the rate-of-return calculation.

Case (a):

Straight line depreciation so that D = $10,000/10 = $1000

Hence:

TI = BTCF - D = $3000 - $1000 = $2000

Cash flow from operations = BTCF - taxes = $3000 - 0.46*2000 = $2080

To obtain the iROR on the initial investment of $10,000:

10000 = 2080□[(1+i)10-1]/[i(1+i)10] which yields $\mathbf{i_{ROR} = 16.1\%}$

Case (b):

The interest payment on the loan is I = 0.10*0.5*$10,000 = $500

The depreciation is as for case (a)

Hence:

TI = BTCF - D - I = $3000 - $1000 -$500= $1500

Cash flow from operations = BTCF - taxes - I = $3000 - 0.46*1500 - 500 = $1810

Hence to obtain the i_{ROR}:

$5000 = 1810*[(1+i)^{10}-1]/[i(1+i)^{10}] - 5000/[1+i]^{10}$ which yields $\mathbf{i_{ROR} = 32\%}$

Thus, debt financing increases by a factor of 2 the rate-of-return on the equity portion of the investment.

However, repeating the calculation for the case of a 50% reduction in BTCF yields:

Case (a):

Straight line depreciation so that D = $10,000/10 = $1000

Hence:

TI = BTCF - D = $1500 - $1000 = $500

Cash flow from operations = BTCF - taxes = $1500- 0.46*500 = $1270

To obtain the i_{ROR} on the initial investment of $10,000:

$10000 = 1270*[(1+i)^{10}-1]/[i(1+i)^{10}]$ which yields $\mathbf{i_{ROR} = 6\%}$

Case (b):

The interest payment on the loan is I = 0.10*0.5*$10,000 = $500

The depreciation is as for case (a)

Hence:

TI = BTCF - D - I = $1500 - $1000 -$500= $0

Cash flow from operations = BTCF - taxes - I = $1500 - 0.46*0 - 500 = $1000

Hence to obtain the i_{ROR}:

$5000 = 1000*[(1+i)^{10}-1]/[i(1+i)^{10}] - 5000/[1+i]^{10}$ which yields $\mathbf{i_{ROR} = 1\%}$

i.e. the highly leveraged option has a very large drop in the rate-of-return when the revenues drop, compared to the 100% equity financed option.

D-*5.3.1 Cost of capital*

Usually an investment will be financed through a mix of equity and debt. Under these circumstance we must know the cost of the capital since this will influence the company MARR - the company would only invest in projects that have a rate-of-return significantly greater than the average cost of capital for the company. The weighted cost of capital sets the lower bound for the minimum acceptable rate-of-return (MARR).

The weighted cost of capital is given by:

$k_W = \Sigma p_j k_j$

where

p_j is the proportion of the total capital that is financed from source j

k_j is the cost of capital from source j

There are a number of sources of capital that a company may utilize including:

Bonds - which represents a debt to the bondholder. They pay a specified interest and have a specified value at the maturity date.

Preferred stock - which represents part of the capital of the business. Preferred stock usually pays fixed dividends

Common stock - which gives the holder a share in the ownership of the assets of the company and proportional control of the business

Retained earnings - this is the income retained within the company

The cost of preferred stock is simply given as:

$k_{Preferred\ stock}$ = Dividend/Price

and for common stock:

$k_{Common\ stock}$ = dividend next year/price + growth rate

Example:

20% of a firm's capital comes from $1000 bonds now selling for $926, which mature in 10 years and pay annual interest of $50. 80% of the capital is represented by common stock which now sells for $65 per share, pays no dividends, but is expected to continue to increase in price by $7 per share for the next 5 years. What is the weighted cost of capital?

For the bonds we must calculate i such that:

$$\$926 = \$50[(1+i)^{10}-1]/[i(1+i)^{10}] + 1000/(1+i)^{10}$$

which yields:

$$kb_{onds} = 0.06$$

For the stocks note that we need i such that:

$$\$65 = [65+7(7)]/(1+i)^5$$

which yields:

$$k_{stocks} = 0.09$$

Hence the weighted cost of capital is:

$$k_W = 0.2(0.06) + 0.8(0.09) = \mathbf{8.4\%}$$

D-5.4 Inflation

Up to now we have assumed a stable economic situation where the purchasing power of the currency (here we will refer to a generic dollar) remains constant. Inflation is characterized by

rising prices, reduced purchasing power or a reduction in the value of money. Inflation therefore makes future amounts (dollars) of less value than present amounts (dollars).

We define Real Dollars as currency of constant purchasing power. Hence, we can refer to real dollars as year zero dollars.

We define Actual Dollars as currency of reduced purchasing power. Hence, actual dollars refer to the actual paper currency or future exchange dollars.

We need to examine the effects of inflation in our economic evaluations, especially when inflation rates are significant. In general, we do this by eliminating inflation effects by converting all cash flows to money units of constant purchasing power i.e. real dollars.

Inflation can benefit long term borrowers since they repay their loan with dollars ofreduced purchasing power. However, inflation is unfavorable for long term lenders. If all costs and benefits are changing at the same inflation rate then inflation will have no effect on before-tax economic considerations. However, suppose we bought equipment in 1995 and were depreciating it for tax purposes, our 1999 income tax calculations would be based on the taxable portion of the 1999 cash flow. But the depreciation is calculated based on the initial cost paid in 1995 costs. Since the depreciation expense cannot be adjusted for inflation, we will have lower values which will increase our tax charges.

The relationship between real dollars (F0) and actual dollars (Factual) can be written in terms of the periodic inflation rate iinfl as:

$$F0 = Factual/(1+i_{infl})^n$$

However, when we include the time value of money, note that the combined effect is not simple addition of the inflation rate and the interest rate. Suppose you receive 5 payments of $100,000 at the end of each of the next five years. If the inflation rate is 7% p.a. and the interest rate is 10% we can calculate the real dollar present value as follows:

End-of-Year	Payment Actual $	Payment Real $	Present Value	
1	$100,000	$100,000/1.07	$100,000/(1.07×1.1)	$84,962
2	$100,000	$100,000/1.07^2	$100,000/(1.07^2×1.1^2)	$72,185
3	$100,000	$100,000/1.07^3	$100,000/(1.07^3×1.1^3)	$61,330
4	$100,000	$100,000/1.07^4	$100,000/(1.07^4×1.1^4)	$52,107
5	$100,000	$100,000/1.07^5	$100,000/(1.07^5×1.1^5)	$44,271

and the total present value in real dollars is $314,855.

From the above we can write an equation for an interest factor that combines both inflation and the time value of money as follows:

$$[1+i_{comb}]^{-n} = [1+i_{infl}]^{-n}*[1+i]^{-n}$$

which implies that

$$1+i_{comb} = [1+i_{infl}]*[1+i]$$

and hence

$$\mathbf{i_{comb} = i_{infl} + i + (i_{infl}*i)}$$

The combined factor allows us to discount for both inflation and interest. For the above example:

$$i_{comb} = i_{infl} + i + (i_{infl}*i) = 0.07 + 0.1 + 0.007 = 0.177$$

so that

$$\text{Present Value} = 100{,}000 * [1.177^5 - 1]/[0.177*1.177^5] = \$314{,}854, \text{ as before.}$$

D-4.3.1 Effect of Inflation on the After Tax Calculation:

The impact of inflation is to increase the actual dollar cash flow, but the depreciation expense is not affected by inflation. Hence, the tax cost increases such that the after tax cash flow in real dollars decreases. Consequently, the real dollar rate-of-return decreases. The following example demonstrates these effects.

Example

A $12,000 investment returns annual benefits for 6 years of $2918 in real dollars. If there is zero salvage, straight-line depreciation, 48% tax rate, calculate the iROR with zero inflation and with 5% inflation rate.

With zero inflation:

The straight line depreciation (SLD) = $12,000/6 = $2,000 per year

Also,

BTCF = $2,918

TI = BTCF - SLD = $918

Taxes = $441

ATCF = \$2918 - 441 = \$2,477

Hence

$$12{,}000 = 2{,}477[(1+i)^6-1]/[i(1+i)^6]$$

which yields i_{ROR} = 6.5%

With 5% inflation:

We must correct the BTCF to actual dollars before calculating the TI and this will change each year:

Year	BTCF Real \$	BTCF Actual \$	SLD	Taxable Income	Taxes	ATCF Actual \$	ATCF Real \$
0	-12,000	-12,000					
1	2,918	3064	2,000	1064	511	2553	2432
2	2,918	3217	2,000	1217	584	2633	2388
3	2,918	3378	2,000	1378	661	2717	2347
4	2,918	3547	2,000	1547	742	2804	2307
5	2,918	3724	2,000	1724	828	2897	2270
6	2,918	3910	2,000	1910	917	2993	2234

Note: BTCF Actual = (BTCF Real) * $(1.05)^n$

ATCF Real = (ATCF Actual) / $(1.05)^n$

Module 4

A Review of Scale-up for

Chemical and Biological Process Development Projects

– The Engineer's Perspective –

[The *Pilot Phase* of a development, scale-up and commercialization project]

Module 4 – Review of Scale-up for Chemical and Biological Process Development Projects

As discussed through Module 3, through the Techno-Economic Analysis (TEA) phase of a process development project, a process innovation is reviewed as part of a complete process using available literature and bench-scale data. The emphasis is on completing an economic analysis and determining technical areas requiring de-risking. Some of this de-risking work involves more bench-scale work. However, a significant portion of it typically involves the design and construction of prototypes or pilot plants. This work typically involves scale-up considerations, which is an important focus of this module. At this development phase, which we are labelling it the *pilot phase*, we are back at working mainly on the innovation portion rather than the whole process as we did through the TEA phase.

Required Knowledge:

This module pre-requisite is that the reader be already familiar with:

- Developing process flow diagrams
- Developing mass and energy balance models
- Designing unit operations
- Designing reactors
- The concept of dimensionless numbers

Through this module, we will explore some techniques used to scale up process technologies. However, we will start by discussing types of scale-ups and what typical areas of a process need the design and construction of a prototype or pilot plant.

The typical main technical objectives of the pilot plant phase of a development project are:

- To complete the bulk of the technology technical de-risking work
- To gather the data that is required to scale up the technology to full commercial size

Much business development work runs in parallel to the technical activities discussed here. This business work may include updates to the business plan, which may involve the development of market penetration strategies, funding strategies, and/or a complete commercialization strategy. Yet another important activity at this project phase, which we will discuss in the next module, is the development of a more complete intellectual property position for the technology.

Figure 4.1 provides an overview of where the *pilot phase* falls within the process development pathway.

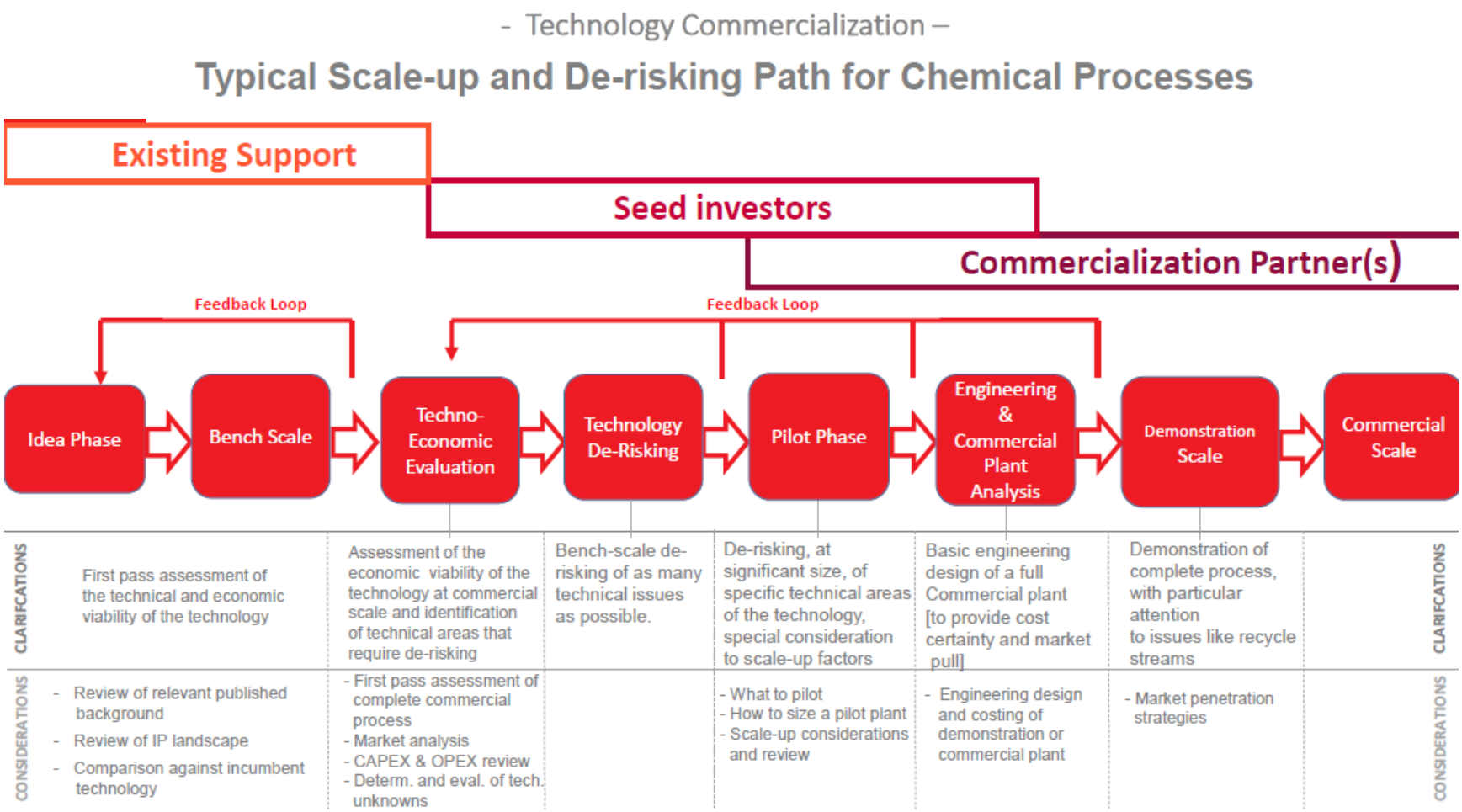

Figure 4.1 – Typical Process Development and Commercialization Path for Process Technologies

4.1 A General Introduction to Types of Process Scale-ups

In this module, we are assuming that a novel process technology has moved successfully through the *bench-scale* and *TEA* development phases. As much technical de-risking work as can be done has been completed at the bench-scale, and the results warrant moving the technology to the next development phase. The typical next phase involves the design, construction and operation of pilot plants or prototypes. These units are used to complete the technical de-risking work for the technology, which invariably involves the development or refinement of mathematical scale-up models that can be used to confidently design and build larger and larger models of the invention. As stated in previous modules, we are assuming that the invention involves process hardware in some fashion.

Within the context of these notes, let us start by defining *mathematical scale-up models* as tools that can be used to successfully design a commercial piece of equipment or process plant based on the data from experimentation at a smaller scale operation. To add further context, let us discuss some specific scale-up issues first.

In general, there are many factors that can affect the scale-up of a process technology. The most common factors are related to equipment shapes and sizes. Where most process development starts at the bench scale using experimental equipment at the liter scale or smaller, full size industrial equipment are typically in the cubic meter scale. Translating the bench-scale results to full size equipment is not an easy matter. Some factors that tend to affect this type of scale-up include:

- Equipment shape, which can affect mass and heat transfer performance (e.g., as equipment are made larger short-circuiting and stagnation areas are more prevalent)
- Surface-to-volume ratios (i.e., maintaining aspect ratios is not always easy or possible)
- Heat removal (i.e., it is easier to remove heat from smaller equipment, or harder to preserve heat in smaller equipment)
- Wall/edge/end effects, which are significant influencers on performance at the small scale but not at the large scale.
- Flow stability (e.g., it is easier to maintain stable two-phase flows in small equipment than it is on large equipment)

Another factor that may affect the scale-up of a process, that can only typically be assessed at the pilot scale, is the effect of impurity build-ups (e.g., by-products formed in the process, or impurities entering with the feeds). Many new processes reaching full-scale had been thwarted by unexpected build-ups that were not properly assessed through the pilot phase of a project. As an example, the first large commercial plant for the production of nanocrystalline cellulose was commissioned in Quebec in 2011. This process uses sulfuric acid as the catalyst for the hydrolysis of cellulose to nanocrystalline cellulose. On start-up, to the surprise of the commissioning and engineering design teams, the recirculating acid slowly became very dark and saturated with sugars, a by-product of the over-hydrolysis of the cellulose. The net effect was a reduction in production capacity and the need to purge acid. Much development work to find a solution to this process problem ensued. This example leads us to an important point, which is that even though pilot plant studies are typically expensive, the reactive work to finding solutions to problems once a technology has been commercialized is by far a greater cost[21].

A final point on impurity build-ups is that to properly identify causes at an early development phase, one must review the innovation as whole process, which is an activity that should have been completed through the TEA phase of the project. Modeling (i.e., mass and energy balance calculations) can be used to crudely assess if impurities can build up and what the effect in the process may be. However, ultimately the possibility and effects of build-ups should be checked and assessed through the operation of a pilot plant system that is purposely built for that goal. Fortunately, build-up effects can be easily studied on prototypes, and what is identified at the pilot scale tends to translate nicely to full commercial plants.

It is in the scale-up assessment of equipment that a lot more care is required because what is learned at the pilot plant scale does not necessarily translate well to the full scale unless the pilot work is very carefully planned and designed. The proper scale-up of process equipment is a complex activity.

Through the remainder of this module, we will focus on the scale-up of equipment.

As mentioned, tackling the scale-up issue of impurity build-ups requires first defining the complete commercial process. Similarly, an important first step on scaling up equipment involves defining how the commercial unit should perform. The work completed through the TEA phase should provide a good starting point for it. In short, through the TEA the equipment of the commercial plant is preliminarily sized, assuming a specific performance, typically the performance observed at the bench-scale. Therefore at this point of the development phase, we should have the possible

[21] By no means the author implies that there were any shortcuts taken in the development of the nanocrystalline cellulose commercialized in Quebec

size of the equipment at the commercial scale on one hand, and the bench-scale equipment used to define the performance of the technology on the other hand. We now need to bridge these two. We want a commercial size piece of equipment that performs similarly to the bench-scale equipment used through idea phase of the development project.

In general, there are four approaches or techniques to move a technology from the bench-scale to full commercial size:

- *Full-scale testing*. This approach does not involve scale-up. It requires the design, construction and installation of a full-size technology package from the knowledge gathered at the bench-scale. This approach typically applies to relatively small equipment to be installed in relative small applications, where the risk involved is small or modest. An example would be the novel process system package that was proposed for the removal of process impurities from the acid loop from the nanocrystalline cellulose process described above, which was a small package potentially applied to a small by-pass stream.
- *Scale-up with the use of correlations*. For some equipment, the science influencing the performance of the unit operation is so well understood that well-established mathematical correlations are available to scale up the equipment. A good example are heat exchangers. Heat exchangers can be scaled up to very large sizes using well-established sizing correlations, without the need for experimentation at a pilot scale. Distillation columns, absorbers and strippers are other examples, but within some limitations as further discussed later.
- *Empirical scale-up*. This approach involves sequential scale-up studies, each increment building upon the knowledge gained in the previous smaller increment, typically maintaining geometry homogeneity as much as possible.
- *Fundamental scale-up*. This approach involves the use of dimensional analysis, which will be described in more detail later. However, as it will be discussed, it is rare to apply the fundamental scale-up technique on its own.

It is the last two approaches that are most often used to scale up complex equipment, many times in combination. These are the two scale-up approaches that we will be reviewing in this module.

4.2 Prototypes and Pilot Plants versus Demonstration Plants

Before moving ahead with discussing scale-up techniques, let us dispel a common misunderstanding. *Pilot plants* or *prototypes* are not *demonstration plants*.

Prototypes or pilot plants, terms that are used interchangeably, are set-ups designed and built to study particular scale-up issues, specific phenomena. They are typically built to afford much flexibility and seldom look what the commercial unit may end up to be. On the other hand, demonstration plants are simply miniaturized commercial plants. They are small representation of the complete commercial process. Their purpose is not typically to gather scale-up data, and often lack the operating flexibility that would be required to do so. Demonstration plants have more of a business objective than a technical goal. They are often built to obtain market acceptance.

4.3 Scale-up of Equipment

Through this section, a practical approach to equipment scale-up is presented, which closely ties with the design of pilot plants. We will discuss the design of pilot plants later. We will start with a review of two of the four scale-up approaches presented in section 4.1: *fundamental scale-up, and empirical scale-up*. Furthermore, we will mesh them together to add practicality to the overall approach.

4.3.1 Fundamental Scale-up

In the context of this module, fundamental scale-up refers to the use of dimensional analysis for the purpose of sizing equipment. More specifically, the development of mathematical equations for the sizing and scale up of equipment. In broad terms, dimensional analysis is simply a mathematical tool, which when applied properly enables engineers to save considerable time in the experimental work and analysis of results that are required to develop the aforementioned mathematical equations. It is a tool to attack problems not amenable to a direct theoretical solution.

Let us first define three terms: physical quantity, dimension and numerical value. Through this module we will define a *physical quantity* as a physical characteristic of a problem or object (e.g., velocity or length). *Dimensions* are the units we use to define an amount of a physical quantity (e.g., meters or feet are used to define the dimension for length). *Numerical value* represents a quantitative description of a physical quantity on a specific dimension (e.g., for a mass of 5 kg, 5

represents the numerical value). Summarizing, a mass of 5 kg is broken down into physical quantity (i.e., mass), numerical value (i.e., 5), and dimension (i.e., kg)

Now we can proceed to broadly define dimensional analysis as *a technique used to combine independent physical quantities to reduce the number of relevant variables affecting a dependent physical quantity in an equation that combines them all, while maintaining dimensional homogeneity.* Dimensional homogeneity simply means that the dimensions on either side of an equality sign must be the same. Before adding dimensionless number to the discussion, let us broadly discuss dimensional analysis to add some context and make its definition easier to understand.

We are all familiar with certain aspects of dimensional analysis. For example, we are all familiar with the combination of the independent physical quantities of *distance* and *time* into a ratio, forming the new physical quantity of *velocity*. Most of us are also familiar with the physical quantity of *momentum*, which we know has SI dimensions (units) of kg . m/s, and therefore it is affected by the independent physical quantities of mass, distance and time. However, when defining the relationship between momentum and the independent physical quantities affecting it, we typically combine distance and time into the physical quantity of velocity, reducing the variables affecting momentum from three to two. The momentum equation is,

$$P = m * v \qquad (4.1)$$

Where, p: momentum;

m: mass

v: velocity.

Note that when combining distance and time, we did so maintaining dimensional homogeneity between the two sides of the equal sign. Therefore, we just reduced the number of physical quantities affecting momentum while maintaining dimensional homogeneity. In this example, we have just applied the essence of dimensional analysis to a very simple physical problem. We should stress the word *essence* because to get really into dimensional analysis we need to introduce dimensionless numbers, which we will do later in this section.

Let us introduce one more concept at this point, the difference between *base and secondary physical quantities*. In physics, there are seven *base physical quantities*, and *base dimensions*:

- Length (SI dimension, meter)
- Mass (SI dimension, kilogram)
- Time (SI dimension, seconds)
- Temperature (SI dimension, Kelvin)
- Amount of substance (SI dimension, mol)
- Electric current (SI dimension, ampere)
- Luminous intensity (SI dimension, candela)

Secondary physical quantities form from the combination of base physical quantities. Some examples are:

- Energy (SI dimension, Joules, J ≡ kg . m^2 / s^2)
- Pressure (SI dimension, Pascal, Pa ≡ kg / m . s^2)
- Force (SI dimension, Newton, N ≡ kg . m / s^2)
- Power (SI dimension, Watt, W ≡ kg . m^2 / s^3)
- Thermal conductivity (SI dimension, W / m . K)

With the above added concept, let us now introduce dimensionless numbers into the dimensional analysis discussion by studying the following example. We are here introducing the *heat transfer coefficient*, a very familiar coefficient to chemical and mechanical engineers. The heat transfer coefficient simply tells us how much energy flows through a specific unit area of heat transfer per unit time and unit temperature difference between the two sides of the heat transfer area. The SI dimensions for a heat transfer coefficient are J/s.m^2.K. Heat transfer coefficients are found experimentally, and are used to size and scale heat exchangers through the following well-established correlation:

$$A = \frac{Q}{U \times LMTD} \tag{4.2}$$

Where, A is the area of the heat exchanger, which is usually what we are trying to determine when sizing or scaling a heat exchanger; Q is the heat transfer required; LMTD is the logarithm mean temperature difference between both sides of the heat transfer area; and U is the overall heat transfer coefficient. As mentioned, it is U that needs to be determined experimentally. Therefore, much scale-up work goes into determine correlations that can predict U based on experimentally gathered data. To do so, we must first determine what physical quantities affect it.

In the case of the heat transfer coefficient, in a tube for example, the following physical quantities affect U:

- Velocity of fluid (v)
- Density of fluid (ρ)
- Viscosity of fluid (μ)
- Specific heat of fluid (c_p)
- Thermal conductivity (k)
- Diameter of the tube (d)

It should be obvious that to determine a proper correlation for the heat transfer coefficient as a function of the physical quantities affecting it, we would need to perform a very large number of experiments to account for all possible interactions among all combinations of these physical quantities. We would also find it a challenge maintaining dimensional homogeneity in whatever correlation we are trying to develop from the experimental data gathered. The latter being a significant challenge. As an example, we know that the SI dimensions for the heat transfer coefficient are J/s.m2.K, but what if we find experimentally that the heat transfer coefficient for our set-up changes to the cube power of the fluid velocity and the square root of the thermal conductivity? How do we maintain dimensional homogeneity? How do we create a correlation where the dimensions on the right hand side of the equation simplify to the units of J/s.m^2.K? It is dealing with this challenge where some of the elegance of dimensionless numbers comes into play.

Through the application of dimensional analysis, we may be able to combine some of the physical quantities affecting U so that we can reduce the number of variables affecting it. In that case, we would be able to reduce the number of experiments required to find a mathematical equation that correlates U to the physical quantities affecting it, mainly because we need to consider less

interactions. This is one important benefit of dimensional analysis. Now, if we could also combine physical quantities into new variables such that their dimensions (units) cancel out to produce dimensionless quantities, then maintaining dimensional homogeneity in a correlation would be significantly easier. It would be easier because we can now raise any of the determined dimensionless quantities to any power without affecting the dimensional homogeneity of the problem. Just like we combine distance and time to obtain the physical quantity of velocity, which has dimensions of length/time, can we combine some of the physical quantities affecting the heat transfer coefficient into one or more new physical quantities where all dimensions cancel out creating dimensionless physical quantities? [We will discuss later how to combine physical quantities into dimensionless quantities]. It turns out that others have worked through this problem and determine that the overall heat transfer coefficient for a tube can be estimated through the following experimentally determined equation:

$$U = \frac{k}{D} \times [0.023 \times Re^{0.8} \times Pr^{0.3}] \qquad (4.2)$$

Re and Pr are two well-known dimensionless quantities, numbers. Re is the Reynolds number which brings together velocity, density, diameter and viscosity into a single physical quantity and in such a way that all dimension cancel out (see equation 4.3). Pr is the Prandlt number which brings together heat capacity, viscosity and thermal conductivity into another dimensionless physical quantity (see equation 4.4). For those familiar with heat transfer, the portion of equation 4.2 in between brackets is just the Nusselt number.

$$Re = \frac{\rho * v * d}{\mu} \qquad (4.3)$$

$$Pr = \frac{Cp \times \mu}{k} \qquad (4.4)$$

In all, equation 4.2 has all six physical quantities known to affect the heat transfer coefficient in a tube. Four of them are not directly in the correlation, but they are there embedded in the two dimensionless numbers.

As we are going to discuss further later, dimensional analysis does not directly help us to determine equation 4.2 from the six physical quantities affecting U. However, it provides us with a tool to determine the dimensionless numbers that must be considered. Testing in an experimental set-up is later required to determine the mathematical correlation tying the dimensionless numbers to U.

Through the introduction of dimensionless physical quantities, we have done the following:

- We have reduced the number of variables that need to be considered to experimentally determine a correlation for the heat transfer coefficient (i.e., from six to four)
- We have reduced the need to maintain dimensional homogeneity to only having to combine k and D in the correlation in such a way that the dimensions end up as $J/s.m^2.K$. The other two physical quantities, Re and Pr, can be combined through multiplications and divisions and to any power, without affecting the dimensional homogeneity of the final correlation.

There is one more important element of dimensional analysis that relates to scale-up that we must briefly discuss. When combining independent physical quantities into another single physical quantity, it is the relationship among those variables, as defined within the new physical quantity, that is relevant rather than the absolute value of each of those physical quantities; and this adds a lot of flexibility in the scale-up of equipment. As an example, refer to equation 4.2. This equation is a function of the Reynolds number, and the Reynolds number is a function of variables such as velocity and diameter, for the case of heat transfer through a tube. Assuming that density and viscosity are constant, then on scale-up what we must maintain constant is *velocity x diameter* rather than *velocity* and *diameter*. On scale-up, we do not need to maintain the tube diameter proportional in size as we go from one size to another as long as the velocity is changed so that *velocity x diameter* is equal in both cases, and that adds much flexibility when sizing equipment.

Above, we summarized the three main reasons of why dimensional analysis is so useful in the scale-up of equipment, mainly

- It reduces the numbers of experiments required to develop a mathematical scale-up correlation
- It simplifies the complexity of attaining dimensional homogeneity
- It adds flexibility in how we can combine physical quantities when sizing equipment

We are now going to discuss dimensionless numbers is some more details. From our discussion point of view, dimensionless numbers are physical quantities, and to us physical quantities have some meaning that we can relate to (e.g., time or length). Similarly, some dimensional numbers also have some meaning that we can relate to, although they may be somewhat more abstract. Here are some examples:

- Reynolds number: it is often used to define the onset of turbulence of a fluid
- Rayleigh number: it is often used to predict whether a fluid's heat transfer will happen mostly through natural convection or through conduction
- Peclet number: it is often used to predict if mass transport will happen through active convection or diffusion

However when it comes to dimensional analysis, dimensionless numbers do not necessarily need to always have a physical meaning. They are means that simplify our work.

In the scale-up of equipment often the first step of the dimensional analysis process is to identify all physical quantities that affect or are involved in the problem. Above, we listed all six physical quantities affecting the heat transfer coefficient. The step of identifying all relevant physical quantities requires much experience. Miss one relevant physical quantity and the outcome of the work may be meaningless. It is here where a weakness of using dimensional analysis alone to scale up equipment lies. There is no procedure or recipe to identify all physical quantities, other than much experimental work at the bench scale. But as said, it requires experience. This is a reason why experienced engineers combine fundamental scale-up techniques with empirical scale-up techniques when scaling up processes, mainly to decrease risk. However for now, let us move on the assumption that all relevant physical quantities can be identified. Then, at least two questions should come to mind. How do we combine physical quantities into dimensionless numbers? And how many dimensionless numbers do we need to consider when developing a correlation that models a physical problem? As shown above, two dimensionless numbers are involved in the mathematical correlation for the heat transfer coefficient. To answer these questions, we are introducing two new concepts: the *Principle of Similarities* and the *Buckingham Pi Theorem.*

Informally, we have already discussed the *Principle of Similarities*, but let us now be more specific. The *Principle of Similarities* states that to scale up equipment from laboratory or pilot plant data, we must maintain relevant dimensionless groups characterizing the phenomena of interest

constant from the smaller to the larger scale. In our example above, when scaling a heat exchanger we would need to maintain the Re and Pr dimensionless numbers constant if we want to obtain the same performance, that is the same heat transfer coefficient.

The reader may have noticed that when defining the *Principle of Similarities*, we referred to dimensionless groups, plural, to define a phenomena of interest, a physical problem. Many physical problems need groups of dimensionless numbers to be modelled properly. In other words, all the physical quantities affecting the physical problem need to be combined into a set of dimensionless numbers. On scale-up, performance similarity between small and large equipment requires that the set of dimensionless groups have the same values. But how many dimensionless numbers are required in a set? According to the *Buckingham Pi Theorem*, the number of dimensionless numbers required to define the performance of a piece of equipment or a physical problem is given by p,

$$p = n - r \qquad (4.5)$$

Where n is the total number of physical quantities affecting the physical problem and r is the number of base dimensions involved in those physical quantities. Base dimensions were defined above. Going back to our heat transfer coefficient example, a total of seven physical quantities are involved, six independent variables (i.e., velocity, density, viscosity, specific heat, thermal conductivity, and diameter), and one dependent variable, U. Those seven physical quantities are described by four base dimensions: dimension of length, dimension of time, dimension of mass, and dimension of temperature (e.g., specific heat's SI dimensions are J/g ºC, which in base dimensions simplifies to m^2/s^2 ºC, involving the base dimensions for length, time, and temperature). Since we are dealing with seven physical quantities and four base dimensions, then three dimensionless quantities are needed to correlate all variables, but only two to correlate all independent variables to the dependent variable, which as we found out are the Reynold number and the Prandlt number (see equations 4.6 to 4.8). Appendix A provides the derivation, where using the *Buckingham Pi Theorem* all six independent variables are combined and reduced to the Re and Pr numbers.

We can now move to the last part of this discussion which is how do we combine physical quantities into relevant dimensionless numbers. This brings us back to the *Buckingham Pi Theorem*. This theorem provides the steps required to combine all relevant physical quantities affecting the physical problem into the number of dimensionless quantities needed. In our heat

transfer coefficient example, we estimated that two dimensionless numbers are required to correlate the dependent variable to the independent variables. We also defined the six physical quantities affecting the heat transfer coefficient. Using the *Buckingham Pi Theorem,* we end up combining all six physical quantities into the groups defined in equations 4.3 and 4.4 above which are in fact the Re and Pr dimensionless numbers.

A detailed review of the *Buckingham Pi Theorem* is outside of the scope of these notes. The reader is referred to Zlokarnik (1) for a detailed discussion on this theorem. However as mentioned, in Appendix A an example is provided to show how the theorem is used to determine that Re and Pr are the dimensionless numbers affecting the heat transfer coefficient (i.e., equation 4.2). The work in Appendix A shows that,

$$f(U, v, \rho, \mu, c_p, k, d) = f(\Pi_1, \Pi_2, \Pi_3) = f(\Pi_1, Re, Pr) = 0 \qquad (4.6)$$

where, $\Pi_{1\text{-}3}$, dimensionless numbers

and where $\Pi_1 = U * d / k$ (4.7)

Therefore,

$$U = (k/d) * f(Re, Pr) \qquad (4.8)$$

Based on the application of the theorem, we determined that the heat transfer coefficient is equal to the ratio of the thermal conductivity and the tube diameter times a function containing the Re and Pr numbers. Experimentally, we would need to determine what that function is, and this work requires the design and construction of an experimental set-up.

Based on this brief discussion, the reader should now understand that the *Buckingham Pi Theorem* only allows us to:

- Determine the number of dimensionless numbers required to model a physical phenomena
- Properly combine all physical quantities affecting the physical phenomena into the required number of dimensionless numbers

The theorem does not tell us:

- What the relevant physical quantities affecting the phenomena are. Only experience and experiments can tell us that.
- How to develop an equation that can properly model the physical phenomena of interest using those dimensionless numbers defined by the theorem. Only experimentation can provide the data required to do so.

4.3.1.1 Well-Established Dimensionless Numbers

As mentioned in the previous section, the *Buckingham Pi Theorem* provides a method for determining the dimensionless numbers that should be considered in defining a physical phenomena. The determination of the relevant dimensionless numbers is a starting point towards the design and construction of a pilot plant, if its reason to be is the development of a scale-up mathematical model. As was mentioned previously, there are many reasons to design and built a pilot plant. However as also mentioned, the fundamental scale-up technique relies on the engineer identifying properly all the physical quantities affecting the physical phenomena, which requires much experience and is often challenging. As a result, experienced scale-up engineers sometimes take a different approach. Rather than developing their own dimensionless numbers, they instead select well-established dimensionless numbers that they know are relevant to their physical phenomena. The challenge is to become very familiar with established dimensionless numbers to know which ones to select for the specific problem at hand. In this section, let us discuss some of the most commonly established dimensionless numbers.

Reynolds Number (Re)

$$Re = \frac{\rho * v * d}{\mu} \tag{4.9}$$

As previously discussed, the Re number is used to determine whether fluid flow is laminar or turbulent in nature, or how turbulent it is. Looking carefully at the equation, the reader would see that Re number is simply the ratio of inertia forces (numerator) and viscous forces (denominator). High viscous forces makes a fluid flow behave laminar in nature, while high inertia forces makes a fluid behave turbulent in nature. For any physical phenomena where the fluid flow behavior is important, the Re number will play a role. Some examples are heat transfer or mass transfer

problems, i.e. the determination of correlations for heat transfer coefficients or mass transfer coefficients.

Prandtl Number (Pr)

$$Pr = \frac{Cp \times \mu}{k} \tag{4.10}$$

The Pr number is a dimensionless quantity that puts the viscosity of a fluid in correlation with its thermal conductivity. Therefore, it assesses the relationship between the momentum transport and the thermal transport capacities of a fluid. It only depends on the fluid properties. In general, Pr > 1 means that momentum diffusivity is greater than heat diffusivity. In simpler terms, the Pr number tells us whether heat convection effects or heat conduction effects will dominate the specific physical problem. Under low Pr numbers, heat conduction effects will be prevalent over heat convection effects. For heat transfer problems, the Pr number tells us if the heat transfer will be happening mainly through conduction or convection effects. For any physical phenomena involving heat transfer, the Pr number my play an important role. An example is the determination of correlations for heat transfer coefficients.

Nusselt Number (Nu)

$$Nu = \frac{L \times h}{k} \tag{4.11}$$

Where L: length

h: heat transfer coefficient

The Nu dimensionless number quantifies the ratio of convection heat transfer to conduction heat transfer. It is typically a function of two other dimensionless numbers, Re and Pr. It is used in the determination of correlations for heat transfer coefficients.

Biot Number (Bi)

$$Bi = \frac{L \times h}{k} \tag{4.12}$$

The Biot dimensionless number is the ratio of heat transfer resistance inside a solid body to the heat transfer resistance at the surface of that solid body. It has the same formula as the Nu dimensionless number. However, in the Bi number the k referrers to the thermal conductivity of the solid. It is of relevance in unsteady state heat transfer conditions. For example, the heating or cooling of a solid object. It provides a way to compare the conduction resistance within a solid body to the convection resistance of that body to heat transfer. Therefore, it plays a fundamental role in conduction problems that involve surface convection effects. It is used to estimate the heat transfer coefficient of transient conduction problems.

Schmidt Number (Sc)

$$Sc = \frac{\mu}{\rho \times D_{AB}} \tag{4.13}$$

Where, D_{AB}: mass diffusivity

The Sc number is the mass transfer equivalent of the Pr number. It assesses the relation between momentum transport and mass transport of a fluid. It only depends on the fluid properties. In simple terms, the Sc number tells us whether convective mass transfer or diffusion mass transfer is the dominant effect in a mass transfer problem. High values for the Sc number would indicate that momentum transport is prevalent and therefore convective mass transfer is more dominant. Convective mass transfer is really diffusion (the random movement of molecules) in combination with advection (molecules being carried along with the motion of the fluid). For physical phenomena involving mass transfer, the Sc number may play an important role. An example is the determination of correlations for mass transfer coefficients.

Lewis Number (Le)

$$Le = \frac{k}{\rho \times Cp \times D_{AB}} \tag{4.14}$$

The Le dimensionless number is simply the ratio of the Sc to the Pr dimensionless numbers. It is a measure of the relative thermal diffusivity to the mass diffusivity of the fluid, or the thermal and concentration boundary layers. It is a relevant dimensionless number to characterize fluid flow when simultaneous heat and mass transfer by convection are involved. It should be considered

in reactive system with significant heat transfer. For example, it is an important dimensionless number in the study of combustion.

Peclet Number (Pe)

Pe (mass transfer)

$$Pe = \frac{v \times L}{D_{AB}} \tag{4.15}$$

Pe (heat transfer)

$$Pe = \frac{v \times L}{\frac{k}{\rho \times Cp}} \tag{4.16}$$

The Pe dimensionless number is the product of Re and Pr, for the heat transfer case, and Re and Sc, for the mass transfer case. It is the ratio of the thermal energy convected to the fluid to the fluid thermal energy, or the ratio of mass transfer convected to the fluid to the mass transfer conducted within the fluid. For example, small Pe numbers tell us that conduction is important. The Pe dimensionless number is typically used to decide whether transport (heat or mass) by advection should be considered. For example on heat transfer through a tube, the Pe number can tell us whether or not heat diffusion resistance through the wall of the tube can be disregarded or not.

Damkohler Number (Da)

For a first-order reaction,

$$Da = K \times \tau \tag{4.17}$$

Where, K: reaction rate constant

τ: mean residence time

The Da dimensionless number is defined to be the characteristic mixing time relative to the characteristic chemical time. It tells us how long it takes for the fluid to mix relative to how long it takes for the chemical reactions to occur. It is useful to determine whether the diffusion rate or

chemical rate effects are more prevalent in the particular problem. It is typically used in the scale-up of reactors.

Sherwood Number (Sh)

$$Sh = \frac{h \times L}{D_{AB}} \tag{4.18}$$

The Sh dimensionless number is analogous to the Nu dimensionless number in heat transfer problems. The Sh dimensionless number quantifies the ratio of convection mass transfer to conduction mass transfer. It is typically a function of two other dimensionless numbers, Re and Sc. It is used in the determination of correlations for mass transfer coefficients.

Grashof Number (Gr)

$$Gr = \frac{g \times ß \times (Ts - T\infty) \times L^3}{u^2} \tag{4.19}$$

Where, g: acceleration of gravity

ß: volumetric thermal expansion coefficient

Ts: surface temperature

T∞: bulk temperature

ʊ: kinematic viscosity

The Gr dimensionless number plays the same role in free convection that the Re dimensionless number plays in forced convection. Just like the Re dimensionless number provides a measure of the ratio of inertial to viscous forces, the Gr dimensionless number provides a measure of the ratio of the buoyancy to viscous forces. It is typically used to estimate heat transfer coefficients for problems where buoyancy forces are more prevalent than convection forces, e.g., a hot plate standing on still air. In general, if $Gr/Re^2 >> 1$, heat transfer is dominated by buoyant forces in which case the Nu dimensionless number becomes a function of Gr and Pr numbers, rather than the Re and Pr numbers.

Fourier Number (Fo)

$$Fo = \frac{\alpha \times t}{R^2} \tag{4.20}$$

Where α: thermal diffusivity

t: time

R: length through which conduction occurs

The Fo dimensionless number is the ratio of heat conduction to the rate of heat storage. It is used along with the Bi number to solve transient state heat transfer problems. It can also be understood as the time taken to reach steady state.

Froude Number (Fr)

$$Fr = \frac{v}{\sqrt{g \times L}} \tag{4.21}$$

The Fr dimensionless number is the ratio of inertial to gravitational forces. It is very commonly used together with the Re number in gas dispersion or solid draw down applications. However, the Fr number is only relevant if gravitational effects are significant in the specific problems.

Weber Number (We)

$$We = \frac{\rho \times v^2 \times L}{\sigma} \tag{4.22}$$

Where σ: surface tension

The We dimensionless number is often useful in analyzing fluid flows where there is an interface between two different fluids. It is the measure of the relative fluid inertia compared to the surface tension. It is useful in analyzing thin film flows and the formation of droplets and bubbles.

The above dimensionless numbers are just a short list of some of the most commonly used dimensionless numbers in diverse physical problems. Table 4.1 provides a short list of common process applications and related relevant dimensionless numbers.

Table 4.1 – Typical Relevant Dimensionless Numbers for Different Physical Problems

Process Application	Dimensionless Numbers
Determination of Flow Regime	Reynolds
Separation of solids through a fluid	Reynolds, Froude, Drag Coefficient
Separation of bubbles through a liquid	Reynolds, Froude, Weber, Drag Coefficient
Creation of liquid/liquid dispersion	Reynolds, Weber
Liquid/Liquid emulsions	Laplace, Ohnesorge
Transient Conductive Heat Transfer	Biot, Fourier
Free Convection Heat Transfer	Grashof, Prandtl, Nusselt
Force Convection Heat Transfer	Reynolds, Prandtl, Nusselt
Mass Transfer without heat transfer	Reynolds, Schmidt, Sherwood
Mass Transfer with heat transfer	Reynolds, Schmidt, Sherwood, Lewis
Liquid atomization	Reynolds, Weber, Froude, Bond, Ohnesorge
Aerosols separation in cyclones, wire filter	Euler, Reynolds, Stokes
Pressure Drop	Reynolds

4.3.2 Empirical Scale-up

For the fundamental scale-up technique to work well, it must follow the *Principle of Similarities*, which again states that the relevant dimensionless numbers defining a physical problem should remain constant during scale-up. This is a fine principle, but in practice, it frequently remains impossible to fulfill. To illustrate this point, let us look at the scale-up of an exothermic reaction performed isothermally in a jacketed mixed reactor. Let us assume that we want to scale the reactor from 2 meters in diameter to 4 meters in diameter, keeping the geometry the same. In this particular case, the length of the reactor would scale up by 2 times, but the heat transfer area would then automatically scale up by 4 times and the liquid volume by 8 times. The heat removal from the reactor depends on the amount of heat to be removed, which for non-perfect mixing

cases is affected by the mass of the fluid in the reactor, which is 8 times larger in the larger reactor, and the heat transfer area, which is only 4 times larger in the larger reactor. This clearly presents a scale-up problem. From the dimensionless number point of view, this problem may involve both the Nusselt (Nu) and Sherwood (Sh) dimensionless numbers because we are dealing with both heat transfer and mass transfer phenomena. The Nu number relates to the heat transfer area, and the Sh number relates to the mass transfer area. In our example, the heat transfer area changes by 4 times but the mass transfer area by 8 times if we assume a constant mixing power input into the reactor. So how can we maintain both the Nu and Sh numbers constant as we scale the reactor up? It is not possible unless we substantially change the geometry of the reactor.

In general, the best possible compromise is to weigh the effect of each dimensionless group while carrying out intermediate scale-up experiments between the bench-scale and the commercial scale. The approach involves sequential scale-up studies, each increment building upon the knowledge gained from the previous increment. It is this approach that we refer to as the *empirical scale-up* technique; and the addition to it of dimensional analysis as a *hybrid fundamental-empirical scale-up* technique. But what should the intermediate sizes of the prototypes be to develop sensible scale-up mathematical models?

To define what intermediate scales we should consider through the empirical or hybrid scale-up analysis (i.e, the pilot size), we must first define the ultimate size of the equipment involved at the commercial scale, and from there we work backwards to the pilot scale. In most cases, the determination of the commercial equipment size should have been determined through the Techno-Economic analysis phase of the project.

We are now moving into the pilot phase of a development project, where prototypes are often designed and built to gather specific scale-up data, as well as to complete the technical de-risking of the technology. They are usually built, at least in part, with the objective of developing the mathematical models around the fundamental functions developed using techniques such as the *Buckingham Pi Theorem.*

The preceding discussion on the challenges involved in using the Fundamental Scale-up technique to scale-up equipment does not imply that mathematical models based on the dimensional analysis approach should not be developed. Quite the opposite, mathematical models that can be used to scale-up equipment must be proposed based on the bench-scale work if possible. The pilot plant experimental work is then used to refine or correct those models, or develop new ones if that is warranted.

Let us get back to the question of what intermediate sizes we should be experimenting with to obtain reliable data that can be used for scale-up purposes. The answer relies on experience.

There is no fundamental approach that we can apply. Table 4.2 provides scale-up ratios that have been successfully used in industry for the particular case of scaling up reactors. The data from this table was amended from Bisio (2) based on the experience of the author of these notes.

Table 4.2 – Industrial Scale-up Ratios for Reactors

System	Scale of Operation – kg/h		Scale-up Ratio	
	Bench-Scale	Pilot Plant	Bench-Scale to Pilot Plant	Pilot Plant to Commercial
Substantial Gaseous (ammonia, hydrogen)	0.02-0.15	15-150	500-1000	200-1000
Gaseous reactants, liquid or solids products (urea, maleic, anhydride)	0.01-0.2	15-150	300-500	100-400
Liquid and gaseous reactants, liquid products (sulfuric acid, methanol)	0.01-0.3	1-35	200-500	200-500
Liquid reactants, solid or viscous liquid products (polymerization, agricultural chemicals)	0.01-0.2	1-25	20-200	20-200
Solid reactants, solid products (phosphoric acid, cement, ore smelting)	0.10-2.0	20-200	10-100	10-150

Additional scale-up ratios and rules of thumb for different types of unit operations are provided in the next section. But let us now move into an example to provide some clarity on how we can use the empirical data of Table 4.2 and dimensional analysis to scale-up reactors.

Let us now go back to the example that we have been following through the different modules, the scale-up of a novel process for the production of nitrobenzene. Let us apply scale-up techniques to the ongoing effort of scaling up and commercializing this technology.[22]

[22] As mentioned in Module 1, facts and data presented through this example may not be accurate. They may have been altered to enhance the learning outcome.

Tables 3.24 and 3.25 from Module 3, which are shown here again, present the technical risk identified with the development of the technology and the work required to de-risk it, based on all work done up to the TEA phase. As shown in Table 3.25, it was determined that much of the identified technical development risk could be properly addressed through bench-scale work. It is here assumed that the bench work was completed and that now we are dealing with the remaining technical development risks that must be addressed through the construction of prototypes. Referring to Table 3.24, addressing the following technical risks need pilot plant work: 1-a, 1-c, 1-f, 1-d, 1-g, 2-b, and 2-d. The reader is referred to Module 3 for a detailed description of the process of this example.

As it can be deduced from the information of Table 3.24 and 3.25, potentially two prototypes would need to be designed and built. The first prototype would include the reactor and the phase separator downstream of the reactor. This first prototype would be used to study technical development risks 1-a, 1-c, 1-f, and 1-g. The second prototype would include the washer separator. This second prototype would take the product made in the first prototype and study technical development risks 2-b and 2-d.

Table 3.24 – Summary of Identified Technical Process Development Risks

Reaction Area	
	Flowsheet Development
1-a	Acceptable conversion can be attained without a stirred reactor downstream of the main plug flow reactor, R-101 (concern - patent literature calls for the potential need of an additional stirred reactor)
1-b	A pump is not required to move the sulfuric acid from the Product Separator (S-102) to the Acid Evaporator (F-103) (concern - the volume of acid is large and may not be possible to gravity flow this flow, but this would a very expensive pump)
	Mass and Energy Balance Development
1-c	Full conversion is obtained in 70 seconds for the operating conditions selected (concern – this is based on patent data, but not sufficient kinetic data is available)
1-d	The separation of the nitrobenzene and the acid in the Product Separator (S-102) is complete (i.e., at the exit of the unit, insignificant entrainment of one phase on the other) occurs (concern – it is not possible to predict and it can significantly affect operating costs if much acid, which needs to be eventually neutralized, is entrained in the product)

1-e	Insignificant sulfuric acid is entrained with the water vapor leaving the Acid Evaporator (F-103) (concern - this could affect how much acid is lost in the process, same concern as previous assumption)
	Economic Analysis
1-f	The reaction rate doubles every 10 ºC of average temperature increase. This is a rough well-known rule of thumb. Reaction kinetic data is not available in the open literature. (The average reaction temperature between the novel process and the incumbent technology is different) – (concern – sizing of the novel reactor may not be adequate if assumption does not hold true, which may lead to unconverted feeds leaving the reactor, drastically affecting the economics of the process)
1-g	The separation of the nitrobenzene and the acid in the Product Separator (S-102) is complete (i.e., at the exit of the unit, insignificant entrainment of one phase on the other) occurs. The separation residence time requirement is 5 minutes (based on experience) (concern – sizing of separator may not be adequate if assumption is incorrect, potentially leading to entrainment of acid with a significant effect on operating costs)
Product Purification	
2-a	The partition coefficients for the nitrophenol between the nitrobenzene and caustic solutions are high enough that one stage of washing is sufficient to remove the nitropenols from the nitrobenzene below 10 ppm (concern - more than one washing stage may be required if this assumption proves incorrect)
2-b	The separation between the nitrobenzene and the caustic solution in Nitrobenzene/Caustic Solution Separator (S-111) is very good, leading to insignificant caustic leaving with the product nitrobenzene, which could present a product quality issue if it is not the case.
	Mass and Energy Balance Development
2-c	The partition coefficients for the nitrophenol between the nitrobenzene and caustic solutions are high enough that one stage of washing is sufficient to remove the nitropenols from the nitrobenzene below 10 ppm (concern - more than one washing stage may be required, potentially affecting product quality)
2-d	The separation between the nitrobenzene and the caustic solution in Nitrobenzene/Caustic Solution Separator (S-111) is very good, leading to insignificant caustic leaving with the product nitrobenzene, which could present a product quality issue if it is not the case.

	Economic Analysis
2-e	The partition coefficients for the nitrophenol between the nitrobenzene and caustic solutions are high enough that one stage of washing is sufficient to remove the nitropenols from the nitrobenzene below 10 ppm (concern - more than one washing stage may be required)
Effluent Treatment	
	Mass and Energy Balance Development
3-a	The waste water effluent can be neutralized using a single stage of neutralization (concern - in many processes two stages are required)
	Economic Analysis
3-b	The separation between the benzene and the water in Benzene/Water Separator (S-116) is very good, with an assumed separation residence time of 20 minutes (based on experience) (concern- significant water may be entrained with the benzene recycled back to the reactor, which may affect reactor performance)

Table 3.25 – Summary of the Outcome of the Sensitivity-Risk Analysis

Case (by priority)	Development Work Required
1-a 1-c 1-f	All these assumption are related. It was determined that accurate conversion numbers could only be obtained at the pilot scale. The assumptions will be confirmed on the pilot phase of the project.
1-d 1-g	It was determined that some scale and real reactor output, with all its impurities, which can affect separation, are required to determine separation efficiency in S-102. The assumptions will be confirmed on the pilot phase of the project.
2-b 2-d	It was determined that some scale and real process product, with all its impurities, which can affect separation, is required to determine separation efficiency in S-111. The assumptions will be confirmed on the pilot phase of the project.
2-a 2-c 2-e	This assumption can be confirmed by determining the partition coefficients, which can be done in the lab. Bench-scale work is sufficient to address this risk.

1-e	This assumption can be confirmed by working with suppliers of entrainment separation equipment.
3-b	This risk can be assessed by performing lab experiments where the benzene feed contains some water. Bench-scale work is sufficient to address this risk.
3-a	This assumption can be confirmed through bench-scale experiments
1-b	This assumption can be confirmed through engineering hydraulic calculations

Let us focus on the design of the first prototype.

The novel nitrobenzene process of our example revolves around a novel set of reaction conditions that produce nitrobenzene with less by-products. As we have previously discussed, the reaction is performed in a plug flow adiabatic reactor. The reactor is central to the technology. Therefore, let us discuss how we scale up the reactor from the bench-scale, which is all we have done up to this point, to a pilot size and to a commercial size. By scaling up the plug flow reactor, we mean increasing its size while maintaining the same conversion as was obtained in the bench-scale reactor.

[It should be mentioned that most times, the performance of a pilot plant reactor would not match what was obtained in the bench-scale reactor, even under the best of designs. In that case rather than refining scale-up correlations, the pilot plant is used to develop new scale-up correlations that can be used to size the commercial reactor, or the next iteration of prototypes.]

The first point to note about the scale-up of our reactor is that we are dealing with a reaction problem involving mass transfer without heat transfer considerations. There is no addition or removal of heat. The reactor operates adiabatically. Through experience, it is known that under these conditions an ideal plug flow reactor is scaled up maintaining a constant Damkohler (Da) dimensionless number, as shown by varied references - e.g. Rehage (3). In fact, for many physical problems involving unit operations, the open literature usually provides a good starting point not only for the relevant dimensionless numbers to consider in the analysis but also for mathematical models showing the function relating the dependent physical quantities to the dimensionless numbers. However, they are just a starting point and any correlation must be checked and/or refined through the pilot plant phase.

For a first-order reaction, which is the case for the reaction of benzene to nitrobenzene, the conversion rate in an ideal plug flow reactor is represented by the following equation,

$$X = 1 - e^{-Da} \tag{4.23}$$

Where, X: conversion

$$Da = K \times \tau$$

K: Reaction Rate Constant

τ: Mean residence time

To maintain the reactor performance constant as we increase the reactor in size, we must maintain the Da number constant, which means that we must maintain the product of K and τ constant.

The reaction rate constant (K) can be found experimentally through bench scale experiments. K is just a function of temperature, and remains constant on scale-up as long as the reactants ratio is maintained constant and the conversion is not significantly affected (i.e., a constant average temperature through the reactor).

Ideally, the Mean Residence Time (τ) is just the ratio of the volumetric flowrate and the volume of the reactor. Practically, it is not because of issues such as dead-volumes, which are typically a function of the reactor geometry and pressure drop. Therefore, our scale-up goal reduces to develop a mathematical correlation that we can use to estimate τ, which we can then use to calculate Da and, through equation 4.23, conversion.

The Mean Residence Time is a function of the following variables:

- Reactor length, L (dimension, m)
- Reactor diameter, D (dimension, m)
- Fluid velocity, v (dimension, m/s)
- Fluid density, ρ (dimension, kg/m^3)
- Fluid viscosity, μ (dimension, kg/m s)
- System constant, K (dimensionless)

The system constant, K, is a function of the reactor pipe's roughness and the loss coefficients for the reactor entrance and exit. It is an individual constant for every geometry.

Applying the *Buckingham Pi Theorem* method, we can determine that the function relating τ to the above six variables is given by,

$$\tau = \frac{D}{V} \times f\left(\frac{L}{D}, K, Re\right) \qquad (4.24)$$

As expected, the variables inside the function are all dimensionless numbers and the overall equation is dimensionally homogeneous.

Moving forward, an important objective of designing and operating a pilot plant is to gather data that would allow the development of a mathematical correlation for the function described in 4.24. However, we are still to determine how large we need to make the prototype to move ahead with our objective. It is here that the Empirical Scale-up rules-of-thumb come into play.

From Table 4.2, we know that we need to design and construct a pilot plant reactor that is 100-500 smaller than the commercial size reactor. Targeting the higher end of this range and knowing from our previous discussions that the commercial size reactor would have a nitrobenzene production rate of approximately 12,500 kg/hour, the pilot plant reactor would need a production capacity of approximately 25 kg/h of nitrobenzene.

With the bench-scale data for the fluid velocity, reactor diameter and length, and a production capacity of 25 kg/h, we now have sufficient information to size the plug flow reactor for the pilot plant. Assuming that the only objective in designing and building the pilot plant is to develop a mathematical model to estimate τ, then our next step is to:

- Develop an experimental program that study the effects of the following variables on τ, and the interactions among these variables (e.g., a factorial experimental program):
  - Diameter of the reactor
  - Velocity of the fluid
  - Ratio of reactor length to diameter
  - System constant
  - Reynolds number

These effects can easily be studied through tracing tests, where for every set of conditions a tracer is injected in the reactor and measured at the discharge.

Once a mathematical correlation for determining τ is formulated and through the use of equation 4.21, we now have a set of equations that we can use to scale-up the plug flow reactor.

We should point out that for many scale-ups, the prototypes are designed and built to develop correlations that can be used to scale up the equipment. However in many other cases and as previously discussed, the open literature offers correlations that are proven to be applicable to specific scale-up problems, in which case the pilot plant work is reduced to check their validity.

4.4 Design of Pilot Plants and Relevant Scale-up Rules of Thumb

As presented in section 4.2, pilot plants or prototypes are set-ups designed and built to study particular scale-up issues, specific phenomena, or to de-risk specific technical issues. They are typically built to afford much flexibility and seldom have the particular geometry that the commercial unit may end up with. Through this section, we are introducing some useful scale-up considerations and rules of thumb that may prove to be valuable in the design of pilot plants.

The first step in designing a pilot plant is to clearly state the reasons and objectives for building a prototype. These are expensive set-ups, with pilot plants costing as much as a few million dollars. Therefore, their functionality and worth must be justified. They tend to be built to study particular scale-up issues, which means that there may be a number of reasons to build them and that more than one prototype may need to be built to study different issues. Some common objectives for building prototypes are:

- Develop or check scale-up correlations
- Weigh in the effect of different operating or geometry variables, or dimensionless numbers
- Study the effect of impurities build-up
- Check materials of construction
- Produce substantial amounts of product to validate downstream processes
- Study specific technical issues identified through the TEA phase

Depending upon the objectives, one must decide if a prototype is required. This decision is based on experience. As a starting point, Table 4.3 presents some valuable rules of thumb for different types of unit operations, amended from Bisio (2) based on the experience of the author of these notes.

Table 4.3 – Deciding What Equipment Requires Prototype Testing – Rules of Thumb

Equipment	Is a prototype required?	General Comments
Columns (absorbers, adsorbers, strippers, distillation)	Typ. not required. May be needed to gather HETP data or tray efficiency	Prototypes may allow the investigation of unpleasant surprises such as foaming effects
Reactors	Almost always	For homogeneous reaction, the prototype may not be required, but heterogeneous reaction it is always required
Extraction	Almost always	It should be tested in similar type of equipment as that proposed for the commercial scale plant
Solids Handling	Always	Usually done using vendor equipment
Crystallization	Always	Usually done using vendor equipment
Evaporators, heat exchangers	Typically not	Scale-up through the use of correlations is acceptable
Dryers	Almost always	Usually done using vendor equipment
Polymerizers	Almost always	
Fluid Flow	Frequently	Usually not for single phases but almost always for multi-phase flow

Further important considerations in the design of pilot plants and effects on scale-up are provided in Table 4.4, amended from Moreira (4) based on the experience of the author of these notes.

Table 4.4 – General Effects to Consider through Scale-up

Criteria	Bench-Scale (<10 L)	Pilot Scale (<7,000 L)	Commercial Scale
Reproducibility of Results	Variable	Reasonable	Good
Heat Transfer	Easily controlled	Well Controlled	Often limiting
Gas flow through Liquid	Controllable	Fairly controllable	Limiting
Agitation	Uniform	Fairly uniform	Non-uniform
Process Control Response Time	Small	Small to Medium	Large, non-uniform
Risk Tolerance	High	Moderate	Low

Assuming that a prototype should be built, the next consideration that must be carefully assessed is how big the prototype should be. The answer really depends on the objectives set for designing and building the pilot plant. In general, there will be a minimum acceptable size, and going larger would be acceptable but it would lead to higher costs and likely more waste handling. In the previous section, some scale-up rules of thumb were presented for reactors, which can be used to determine the minimum acceptable size of the prototype. For other common pieces of equipment, some rules of thumb are presented here for determining the minimum size of the unit.

An additional point to make is that if the pilot system involves the simultaneous operation of more than one unit operation, the sizing of all pilot plant equipment is set by the smallest common denominator, which means that the capacity of the smallest unit operation sets the capacity of all other unit operations.

Fixed Catalytic Reaction Beds

At commercial scale, several different mechanical designs are typically used for fixed catalytic bed reactors. Two common types are packed beds and packed tubes, the second being often used for cases where heat transfer is important. In packed beds, the catalyst is typically scaffolded into a single packing piece, and hundreds or thousands of these packing pieces are then piled up inside the body of the reactor. In packed tubes, the catalyst is packed inside of each tube. In the case of a packed tube catalyst reactor, the prototype would be best served by including a single full size tube, which would typically have a diameter of 1" to 3". Therefore, the smallest pilot plant would have one catalyst tube. For the case of packed beds, refer to the comments under Columns, discussed later.

Agitated Vessels

Agitated vessels, whether for blending or dispersing phases or mixing immiscible liquids, are difficult to scale up, and therefore determining the minimum size the unit should have at the pilot scale can prove challenging. To understand the challenge, we must first introduce some well-established design rules of thumb for agitated vessels.

Power and mixing relationship - ½ to 1 HP per 1000 gal of thin liquid gives mild agitation; 2-3 HP vigorous mixing; 4-10 HP gives intense agitation.

Agitator to vessel ratio - for dispersing a gas in a liquid the optimum ratio is 0.25; for bringing two immiscible liquids into contact (e.g., liquid-liquid

extract) the optimum ratio is 0.4. For blending the ratio should be 0.6 or more. These ratios relate to the shear produced by the impeller for the same power input.

Liquid level to diameter ratio – for applications not involving heat transfer through a jacket in the vessel, and aspect ratio of 1:1 is desired. For applications involving heat transfer through a jacket, an aspect ratio of 2:1 up to 4:1 is desired. In the latter case, multiple impellers are used in the agitator.

The above rules of thumb imply that on the scale-up of an agitated vessel we want to maintain at least three parameters constant: power to volume ratio, volumetric flow in vessel to volume ratio, and tip speed of the agitator. Maintaining the vessel aspect ratio at 1:1 and the agitator tip speed constant, and knowing that the power input by an agitator and the volumetric recirculation flow in the vessel change proportionally to the third power and fifth power of the agitator diameter respectively, it becomes apparent that maintaining the three ratios constant is impossible.

Therefore, significant work must be done at the bench-scale to determine which of the above three parameters are important in the performance of the specific system being studied. If only one of the two ratios described above is significant, then using the scale-up ratios presented in Table 4.2 to size the pilot plant agitated vessel would be adequate. If both ratios are significant, then scale-up will need to be done in a step-wise approach with scale-up ratios of 3 to 4 at most (i.e., the first prototype would have a capacity of 3 to 4 times larger than the bench-scale). One important observation to keep in mind as the agitated vessel is scaled up is that up to vessels of 5-7 m^3, good uniform agitation can be achieved, but at larger volumes uniform agitation is harder to be attained making results less reliable.

Electrochemical Cells

Many electrochemical processes involve stacks of parallel electrochemical cells. These stacks may contain dozen or even hundreds of cells. Commercial cell sizes, which are typically presented as full area of a cathode, anode and/or membrane, are in the range of 0.25 m^2 to 2 m^2. At the prototype scale, a single full cell would best serve a pilot plant. However, to account properly for possible shunt current losses, a minimum of three or four cells should be considered. For flow pattern studies, the full length of one cell and 9" of width have been successfully used.

Columns

Columns may include absorbers, adsorbers, strippers or distillation columns. These units typically use plates or packing as the medium to aid the mass transfer. For random packing, the minimum column diameter of the prototype must be equivalent to at least seven pieces of packing to minimize wall effects. At the prototype scale, packing heights of 6 feet are adequate, but it should not exceed 10 feet without a liquid redistributor. In all cases, the throughput per cross-sectional area should be held constant, and the distributor must be designed to provide even distribution.

To minimize column sizes at the pilot plant scale, smaller random packing tends to be used, and the performance difference between the smaller packing used in the prototype and larger packing used in the commercial column is corrected through the use of *relative mass transfer coefficients*. Table 4.3 shows some typical *relative mass transfer coefficients*. Packing materials with the same *relative mass transfer coefficient* have similar mass transfer performance, but not necessarily similar hydraulic performance. Hydraulic performance comparisons among different packing materials can be done through hydraulic packing factors.

Table 4.3 – Typical Relative Mass Transfer Coefficients

Packing Type	**Material**	**Size**	**Relative Mass-Transfer Coefficient**
Intalox Saddles	Ceramic	½"	2.27
		1"	1.54
		1-1/2"	1.18
		2"	1.0
IMTP	Metal	1"	1.74
		1-1/2"	1.37
		2"	1.19
Pall Rings	Plastic	1"	1.36
		1-1/2"	1.18
Raschig Rings	Ceramic	½"	1.52
		1"	1.36
		1-1/2"	1.0
		2"	0.92

Heat exchangers

Depending on the type of heat exchanger being tested, their ultimate commercial design may involve a bundle of tubes or a bundle of plates, often a large number of them. In such a case, the prototype would be best served by including a single full size tube or plate.

Heat exchanger prototypes are not typically designed and built to develop scale-up correlations. As was previously discussed, there are well-established mathematical correlations for sizing heat exchangers. However, prototypes may be built to study issues such as fouling or corrosion.

Solid Handling Equipment

Solid handling equipment may include conveyors, rotary valves, or silos. Experience has shown that it is almost impossible to scale up these units using data from small-solid handling units; characteristics such as adhesion to surfaces and to other solids are highly dependent on many factors. In this particular case, tests at almost full scale are required, and equipment suppliers' experience can become very valuable.

Bubble Columns

Under bubble columns, we cover any application where liquid is the continuous phase and gas bubbles are the non-continuous phase (e.g., heterogeneous two-phase reactors, air flotation separation, etc.). A good rule of thumb is that the minimum diameter of the prototype vessel must be at least 40 times larger than the diameter of the bubbles. Experimentally, it has been found that column diameters of 10 cm or larger can provide results that are representative of large units at the same operating conditions.

Rotary equipment

Rotary equipment such as pumps, fan, blowers, compressors, and turbines can all be scaled up using well-established correlations without any need to build prototypes.

4.5 Translating Scale-up Work Results into Engineering Documents

Through the pilot phase of a development project, sufficient data and information is typically gathered to complete the technical de-risking of a process innovation. As part of that work, mathematical scale-up correlations are typically developed to properly design the commercial unit(s) and process. All results and findings are also used to update again the TEA report and the business plan, and provided that the conclusions remain positive, the development project moves into the last three phases of the process development pathway: Engineering and Commercial Plant Analysis, Demonstration Plant, and Commercialization. The Commercial Plant Analysis, and the design of the demonstration plant and commercial plant, which form part of the last two steps, involve engineering design techniques – i.e., the creation of engineering documents and drawings that can be used by fabricators and construction companies to build and install the larger equipment and/or systems. They are also used to more accurately estimate the capital cost of the commercial units.

At a high level, we will review the next phases in the next module. However, an important step, that is often overlooked or poorly addressed or understood, is the translation of R&D results into engineering documents that engineering design companies, usually involved through the last three steps of the process development pathway, can understand. Up to now, we have been talking about TEAs, LCAs, scale-up mathematical models, dimensional analysis, de-risking, etc. But process engineering design companies talk about mass and energy balances, design basis memorandum, piping and instrumentation diagrams, layout drawings, instrument data sheets, equipment drawings, etc. There is a disconnect in the language here, and if not handled well, the development of the innovation may end up failing, not because of any technical shortcomings but because of miscommunication. It would likely be a mistake to assume that an engineering design company can take on the developed mathematical models, collected R&D data, and whatever else the R&D team have put in writing, and from there develop a complete engineering design package for the technology. It takes special skills to translate R&D results into engineering language. It needs the involvement of professionals that have experience in both R&D and engineering design.

In short, translating R&D results into engineering language involves the preparation of a pre-FEED package. FEED stands for Front End Engineering Design. The pre-FEED package feds into the FEED package. As we will cover in the next module, the FEED package involves the preparation of a significant number of engineering documents, all of which are later used to prepare the detailed engineering package of the technology. It is the detailed engineering package that fabricators and construction companies will use to bring the process innovation into

the reality of a commercial system or plant, or just a demonstration plant. But let us discuss here, the pre-FEED package.

The content of a pre-FEED package is not set in stone. However, depending on the specific process innovation, it may contain some of the following engineering documents:

- Design Basis Memorandum
- Flow Diagram
- Mass and Energy Balance
- Simplified Piping and Instrumentation Diagrams
- Equipment Layout Drawing or relevant Equipment Data Sheets

We will discuss each of these engineering documents in some detail in the next module. However, for a development project to move relatively smoothly from the *Pilot Phase* into the *Engineering and Commercial Plant Analysis*, the R&D team must prepare these documents before getting an engineering design company involved. This work is the last technical step of what we have defined in these notes as the *Pilot Phase*. As we will also discuss in the next module, once the pre-FEED package is ready, it is time to get an engineering design company involved. Technically speaking, the engineering design company takes over from here. However, it does not mean that the R&D team is done. It is important that key members of the R&D team take on an advisory role through the next three phases, providing insight on the technology and reviewing the work from the engineering company. The author of these notes have seen a number of process development projects fail because either the engineering design company refused to let R&D team members being intimately integrated into the design team or R&D teams did not recognize the importance of their involvement through the design phases.

4.6 Summarizing the Work and Assessment Findings Through Pilot Plant Phase

As was discussed through this module, by the end of the *Pilot Phase* most of the process innovation technical de-risking is done, and modeling tools to scale it up are ready. The typical scale-up activities and where they fit within the development and commercialization pathway of chemical and biological processes are summarized in Figure 4.2.

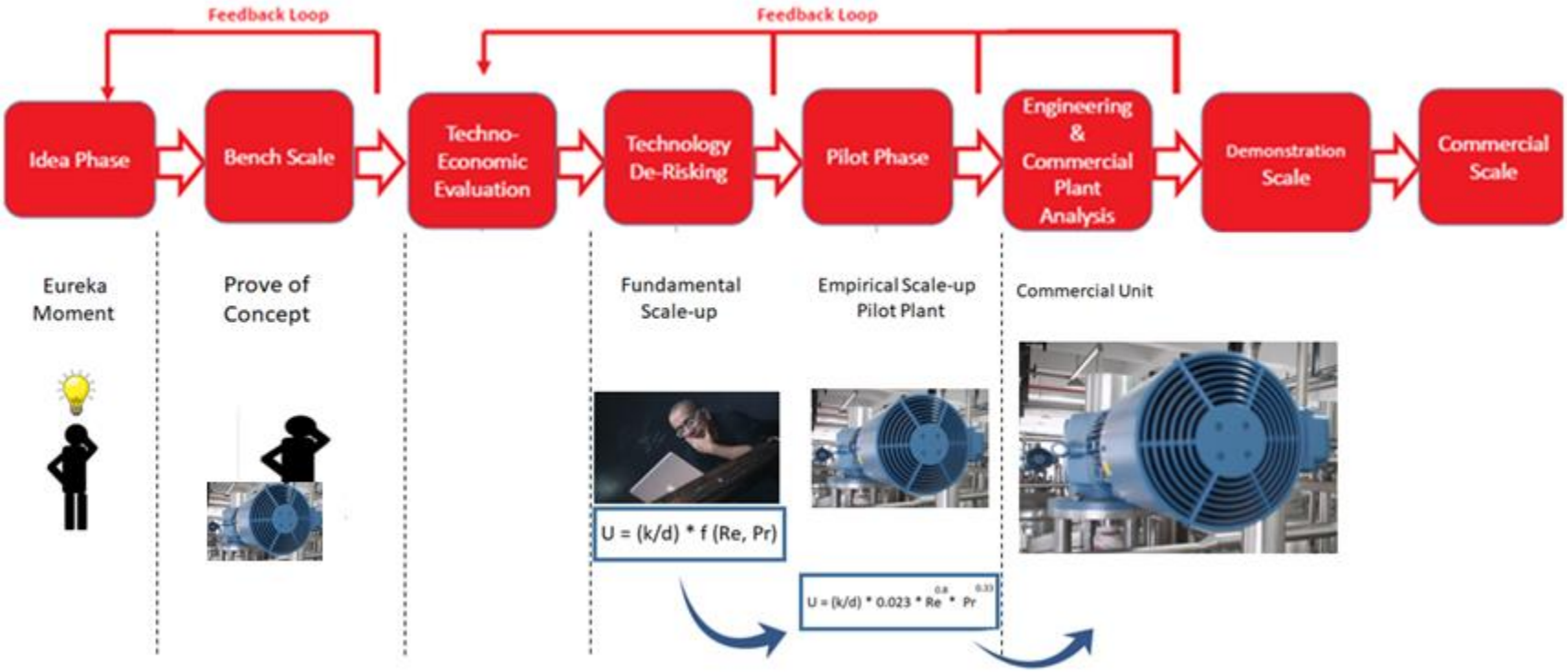

Figure 4.2 – Integration of Scale-up Activities in the Development and Commercialization Pathway

Findings and results are now used to prepare the pre-FEED package. They are also used to update the TEA and business plan once more.

At the end of this phase, most process technologies would be at a Technology Readiness Level (TRL) of 5 to 6.

One concluding remark is the importance of documenting the performed work and findings. Through every stage of development, a final detailed report must be prepared and circulated to stakeholders. A report from the assessment work completed through the *Pilot Phase* should include most of the following sections:

- List of areas of the technology de-risked (results)
- Scale-up mathematical models
- Pre-FEED package
- Updated TEA and business plan
- Proposal for the next phase of development

In the next module, we will review in more detail what is included in a Pre-FEED package and how it gets used to produce the FEED package for the technology. We will also discuss the development of IP strategies and positions for the technology, which should have started after the completion of the *TEA Phase* and refined through the *Pilot Phase*. Finally, in Module 6 we will review market penetration strategies for process technologies, which is arguably the highest hurdle to overcome in the commercialization of a novel process technology. In the same module, we will discuss funding strategies.

References

1- Slokarnik M., (2002), *Scale-up in Chemical Engineering*, Wiley-VCH

2- Bisio A., Kabel R.L., (1985), *Scaleup of Chemical Processes*, John Wiley & Sons

3- Rehage H., Kind M., (2020), The First Damkohler Number and its Importance for Characterizing the Influence of Mixing in Competitive Reactions, *Chemical Engineering Science, Volume 229*, Elsevier.

4- A.R. Moreira and K.K. Wallace, (1996), Strategies for Bioreactor Scale-up, *Computer and Information Science Applications in Bioprocess Engineering, 125-142*. Kluwer Academic Publishers.

APPENDIX A – Using the Buckingham Pi Theorem – Example

In this appendix section the Buckingham Pi Theorem is used to determine the dimensionless numbers that can be considered when developing a correlation for the heat transfer coefficient in a tube. A review of the theorem is outside of the scope of these notes. However, this example provides an overview. The reader is referred to section 4.3.1 for further background information.

An important point to make is that the theorem tells us how many dimensionless numbers we should use to fully defined the problem. It also shows us how we may combine the physical variables affecting the problem. However, the reality is that we can combine the variables in any way we may chose. In the end, we are using this dimensional numbers to experimentally correlate the dependent variable of a problem to the independent variables. The trick is to combine them so that we have a best chance of developing sensible correlations, and the technique provided by the theorem helps in that respect.

In Section 4, the following equation was presented for estimating the heat transfer coefficient across a tube:

$$U = \frac{k}{D} \times [0.023 \times Re^{0.8} \times Pr^{0.3}] \tag{4.2}$$

The heat transfer coefficient is a function of two dimensionless numbers, the Reynolds number (Re) and the Prandtl (Pr) number. These two dimensionless numbers are defined by the following two equations.

$$Re = \frac{\rho * v * d}{\mu}$$

$$Pr = \frac{Cp \times \mu}{k}$$

Equation 4.2 was determined experimentally by *Dittus-Boelter*. However, the question that should be asked is how was it known that heat transfer coefficient can be expressed as a function of Re and Pr. The answer to this question introduces us to the Buckingham Pi theorem.

It is known that the heat transfer coefficient through a tube is affected by the following physical quantities:

- Velocity of fluid (v) – base physical dimensions (m/s)
- Density of fluid (ρ) – base physical dimensions (kg/m^3)
- Viscosity of fluid (μ) – base physical dimensions (kg/m s)
- Specific heat of fluid (c_p) – base physical dimensions (m^2/s^2 K)
- Thermal conductivity (k) – base physical dimensions (kg m /s^3 K)
- Diameter of the tube (d) – base physical dimension (m)

In total we have one dependent variable, U, and six independent variables. We are dealing with the following function:

$$f\,(U, v, \rho, \mu, c_p, k, d) = 0$$

From the above information and using equation 4.3, we can determine that the number of dimensionless numbers that must be used to correlate all variables, dependent and independent, is 3 (i.e, total number of variables is 7 and total number of base physical dimensions is 4, which are kg, m, s, K).

The second step in the theorem is to determine what is called the "repeating variables". These are the variables that will be repeated in the determination of all three dimensionless numbers. Any of the *independent* variables can be selected as repeating variables, but within the following constraints:

- The number of repeating variables must be equal to the number of base physical dimensions (i.e., in our case 4)
- Selected repeating variables must not have the same dimensions (e.g., if we were dealing with *height* and *diameter* as variables, both of which have length as dimension, only of the two can be used as a repeating variable)
- As repeating variables, if possible select variables that will cover the following three areas: geometry, flow, and fluid (e.g., in our case the only geometry variable is Diameter, the only flow variable is Velocity, and possible fluid variables are density, viscosity, specific heat, and thermal conductivity)
- The selected repeating variables must cover all base physical dimension (e.g., in our case the combined variables must include: kg, m, s, and K)

- Do not select the dependent variable as a repeating variable

Based on the above criteria, the following dependent variables are selected as repeating variables:

- Diameter (d)
- Velocity (v)
- Density (ρ)
- Thermal conductivity (k)

Therefore, the non-repeating variables are

- Heat transfer coefficient (U)
- Viscosity (μ)
- Heat capacity (c_p)

In the next step of the theorem, repeating variables and non-repeating variables are combined into dimensionless forms using the following formula:

$$\prod_1 = V_1 * (V_2)^a * (V_3)^b * (V_4)^c * (V_5)^d$$

Where, $\prod_1$ – dimensionless number

V_1 – non-repeating variable

$V_{2\text{-}4}$ – repeating variables

a-d – constants, exponents

With the above procedure, the number of non-repeating variables and number of dimensionless numbers will match, and one non-repeating variable per dimensionless number will be used as variable V_1.

The next step is to calculate the constants a to d. The value of the constants must be such that $\prod_1$ is a dimensionless number. To clarify this point, let us work through the problem. For the first non-repeating variable, we will select the dependent variable U.

$$\prod_1 = U * \overbrace{(v)^a * (\rho)^b * (d)^c * (k)^d}^{\text{Repeating variables}}$$

From the base physical dimensions, we are dealing with,

$$\Pi_1 = (kg/s^3\ K) * (m/s)^a * (kg/m^3)^b * (m)^c * (kg\ m/s^3\ K)^d$$

For Π_1 to be dimensionless, all base physical dimensions must cancel out. This means that,

kg: $1 + b + d = 0$

m: $a - 3\,b + c + d = 0$

s: $-3 - a - 3\,d = 0$

K: $-1 - d = 0$

We are dealing with four linear equations and four constants. Solving the equations, we find that,

$a = 0$

$b = 0$

$c = 1$

$d = -1$

As a result, Π_1 resolves to,

$$\Pi_1 = U * d / k$$

Π_2 and Π_3 are determined in a similar fashion,

$$\Pi_2 = \mu * (v)^a * (\rho)^b * (d)^c * (k)^d$$

$$\Pi_3 = c_p * (v)^a * (\rho)^b * (d)^c * (k)^d$$

The final equations are,

$\prod_2 = \mu / (v * \rho * d)$

$\prod_3 = c_p * v * \rho * d / k$

We now how initial dimensionless numbers that correlate all the seven variables of our problem.

From here, some manipulation is required, and the reader must keep in mind that the objective is to combine the dependent and independent variables into equations where all dimensions cancel out. There is a lot of freedom in how we do so.

It is likely obvious to the reader that the inverse of $\prod_2$ is the Reynolds number,

$\prod_2' = 1 / \prod_2 = (v * \rho * d) / \mu$ (Reynolds number)

Practically, there is no difference where $\prod_2'$ or $\prod_2$ is used in determining a correlation for U. So we will use $\prod_2'$.

In the case of the equation for $\prod_3$, dimensionally the terms of v * ρ * d can be replaced by μ since the overall base physical dimensions are the same. The reader may note that we are dealing with the numerator and denominator of the Reynolds number. As a result, $\prod_3$ simplifies to the Prandtl number,

$\prod_3 = c_p * \mu / k$ (Prandtl Number)

Overall, we are now dealing with the following function,

$f (U, v, \rho, \mu, c_p, k, d) = f (\prod_1, \prod_2, \prod_3) = f (\prod_1, Re, Pr) = 0$

Or,

$\prod_1 = f (\prod_2, \prod_3) = f (Re, Pr)$

Where, $\prod_1 = U * d / k$

As a result,

$U = (k/d) * f (\prod_2, \prod_3) = (k/d) * f (Re, Pr)$

The heat transfer coefficient is a function of the ratio of the thermal conductivity and the diameter times a function with Re and Pr as variables. *Dittus-Boelter* found experimentally that,

$$U = \frac{k}{D} \times [0.023 \times Re^{0.8} \times Pr^{0.3}]$$