QUALITY CONTROL AND QUALITY ASSURANCE IN HYBRID MASS TIMBER HIGH-RISE CONSTRUCTION: A CASE STUDY OF THE BROCK COMMONS

by

Francisco Calderon

B.A.Sc., Universidad San Francisco de Quito, 2015

A THESIS SUBMITTED IN PARTIAL FULFILLMENT OF

THE REQUIREMENTS FOR THE DEGREE OF

MASTER OF APPLIED SCIENCES

in

THE FACULTY OF GRADUATE AND POSTDOCTORAL STUDIES

(Civil Engineering)

THE UNIVERSITY OF BRITISH COLUMBIA

(Vancouver)

April 2018

Abstract

Wood has seen a resurgence recently as a construction material driven by technological advances and a growing concern for the environment. Although an increasing amount of mass timber high-rises are being built all around the world, lack of information and outdated preconceptions are some of the obstacles that are keeping mass timber products from increasing their market share in high-rise construction. Academia and industry leaders must keep track of the progress that is being made and inform the general public as innovation and technological advances continue to take place.

In this context, the University of British Columbia has recently completed the construction of the Brock Commons Tallwood House. This 18-story residence building employs two reinforced concrete cores and a mass timber structure composed of cross laminated timber panels, glued-laminated columns, and parallel strand lumber columns. With this, the building is currently the tallest wood building in the world and a testament to the suitability of engineered wood elements for high-rise construction.

Aiming to address the lack of information surrounding mass timber high rise construction, this thesis documents the quality assurance (QA) and quality control (QC) practices that were put in place during the delivery of the building. The main objective of this research was to identify and present lessons learned from the application of these QA/QC practices. To do this, various QA/QC practices were identified and analyzed by reviewing the project specifications and other project documents, reviewing recognized industry standards, and interviewing various members of the project team.

This study found a series of comprehensive and well-planned QA/QC practices that were put in place by the project team and that were appropriate to comply with the project requirements.

This study concluded that most of these practices are replicable and advisable for future projects. The different QA/QC practices that were identified and the lessons learned from their application are presented in this thesis.

Lay Summary

The key goals of this study were to document and present lessons learned from the quality assurance and quality control practices that were employed during the delivery of the Brock Commons Tallwood House. The Tallwood House is a new residence building located on the Vancouver campus of the University of British Columbia and is currently the tallest mass timber building in the world. The main contributions of this study are (1) the documentation and presentation of replicable quality assurance and quality control practices that were put in place during the delivery of the building and that are appropriate for mass timber high-rise construction and (2) a presentation of lessons learned from the application of these practices.

Preface

All images, figures and tables used in this research include references to the owners and are used with the permission of the applicable sources. Any figures without acknowledgements were developed and created by the author.

Table of Contents

List of Tables

List of Figures

List of Abbreviations

AAMA: American Architectural Manufacturers Association

AHJ: Authorities Having Jurisdiction

ANSI: American National Standard Institute

APA: American Plywood Association

ASCE: American Society of Civil Engineering

ASHRAE: American Society of Heating, Refrigerating and Air-Conditioning Engineers

ASQ: American Society for Quality

BCBC: British Columbia Building Code

BIM: Building Information Modeling

BMS: Building Management System

BSLC: Binational Softwood Lumber Council

CLT: Cross laminated timber

CNC: Computer numerical controlled

CSI: Construction Specifications Institute

Cx: Commissioning

ERW: Energy recovery wheel

GLT: Glued-laminated timber

HRV: Heat recovery ventilation

HSS: Hollow Steel Structure

HVAC: Heating, ventilation and air conditioning

ISO: International organization of Standards

LEED: Leadership in Energy and Environmental Design

MSR: Machine stress rated

NLGA: National Lumber Grades Association

OPR: Owner's Project Requirements

PSL: Parallel Strand Lumber

QA/QC: quality assurance and quality control

QA: Quality assurance

QC: Quality control

SSR: Site Specific Regulation

TWH: Brock Commons Tallwood House

UBC: University of British Columbia

VAV: Variable air volume

VDC: Virtual Design and Construction

Acknowledgements

I want to express my sincere gratitude to my research supervisors Dr. Sheryl Staub-French and Dr. Thomas Froese. Reading their work and publications was what pushed me to pursue this graduate degree, which resulted in some of the most fulfilling experiences of my life. Their constant supervision and guidance made this study possible and helped me to become a better researcher. I also want to thank the rest of Civil Engineering Department and my classmates. My experience at The University of British Columbia has exceeded all my expectations and they all played an important role in that.

I also want to express my sincere gratitude to Zahra Teshinzi, Research Project Coordinator at The University of British Columbia. Our meetings and her constant supervision shaped this study to become what it is today. I also want to thank the Brock Commons project team and the members of UBC that collaborated with this study. Our meetings and engaging conversations were an invaluable source of information.

Finally, I want to thank my family. Their genuine commitment to my education and their support is what made this possible.

Dedication

I dedicate this thesis to my parents and siblings. Their support, love, and encouragement will always push me to new heights.

Chapter 1: Introduction

1.1 Background

In recent times, wood has seen a resurgence as a construction material. This phenomenon has been driven by technological advances and a growing concern for the environment (Mayo, 2015). Technological advances include the replacement of carpentry shops by computer-assisted design and processes and robotic controlled precision tools (Mayo, 2015). Computer numerical controlled (CNC) machines have become more common and advanced. While CNC machines that can cut in three axes are common in wood manufacturing, we are now seeing high-tech CNC machines that resemble robotic arms allowing highly crafted and unique elements to be fabricated with an accuracy in the ranges of 0.05 to 0.1mm (Mayo, 2015).

Material technology and engineering is another area that has seen continuous evolution and improvement. The use of engineered wood products eliminates potential issues when compared to sawn timber, including:

- The size of timber elements needed for building construction can take a hundred years to grow.
- Solid sawn lumber can have knots and inconsistencies, reducing the overall strength of the material.
- Large sawn timber pieces lose moisture after being cut, which can lead to split, twist, or to experience different dimensional changes (Mayo, 2015).

By combining small dimension lumber sticks and using adhesives and pressure during manufacture, engineered wood elements can be fabricated from younger trees, achieving high

design values and low variability of the final product (Mayo, 2015). As technology continues to improve, the maximum dimensions and design values of engineered wood products will continue to increase.

On the topic of sustainability and green construction, Van De Kuilen et al. (2011) present wood as a material with a negative CO_2 balance. Wood sequesters an approximately 0.8 tonnes of CO_2 per cubic meter (Kuilen et al., 2011; Mayo, 2015), while a similar quantity of concrete can produce 1.1 tonnes of CO_2 (Kuilen et al., 2011). Although the sustainability advantages of wood and mass timber products are widely recognized (BSLC, 2014; d'Errico, 2016; Green et al., 2012; Van De Kuilen et al., 2011; Mayo, 2015, Mohammadi et al., 2017), there are certain barriers that have kept it from being more widely employed. In the specific case of high-rise construction, Green et al. (2012) present a series of perceived disadvantages of mass timber elements that are negatively impacting their market share (see Table 1.1).

Table 1.1. Perceived disadvantages of mass timber

Area	Perception
Cost	More expensive than concrete
	Detailing of tall wood will add cost to construction
	Expensive fire protection
	Not enough competition in mass timber market
	Liability for cost and risk incurred
Design	Limits design freedom
	Thicker walls; loss in floor area
Code	Fire resistance not on par with concrete
	In case of fire, entire structure will contribute to fire
	Inadequate level of safety for emergency responders
Structural	Wood is weaker than concrete
	Lack of seismic performance
	More prone to leaky condo syndrome
	Excessive deflection in wind
Public Opinions	Shrinkage
	Rotting
	Flammability
	Glue off-gassing
Marketability	Less valuable than a concrete building
	Higher insurance premiums
	Lack of competition with steel and concrete industries
	Wood supplies compromise sustainably managed forests
Schedule	Slower than one floor/week (standard concrete time)

As innovation and technological advances continue to take place, it is important for academia and industry leaders to keep track of the progress that is being made and inform the general public. As these perceived disadvantages continue to be addressed and are no longer a reality, it is important to remove misconceptions from the industry. Indeed, different studies indicate that some of the perceptions presented in Table 1.1 are debatable or outdated. Mayo (2015) mention that wood has caught up to concrete and steel in many places around the world when it comes to industrialized manufacturing, prefabrication, and rapid site erection. For example, Smith et al. (2018) conducted a comparative analysis between mass timber and conventional site-built

projects. This study found mass timber construction to be especially advantageous when employed in housing, commercial, and office buildings with a height of 3 to 4 stories. The study highlights a cost per square foot comparison and a schedule comparison between seven mass timber projects from around the world and equivalent conventional projects. The results found that mass timber construction had an average of 4.2% cost savings (Figure 1.1) and a 20% schedule reduction (Figure 1.2). These savings were explained by different advantages of mass timber over conventional construction, including reduction of labor hours, precision of construction, foundation reduction, speed of construction, and an enhanced capacity to build in remote locations (Smith et al., 2018).

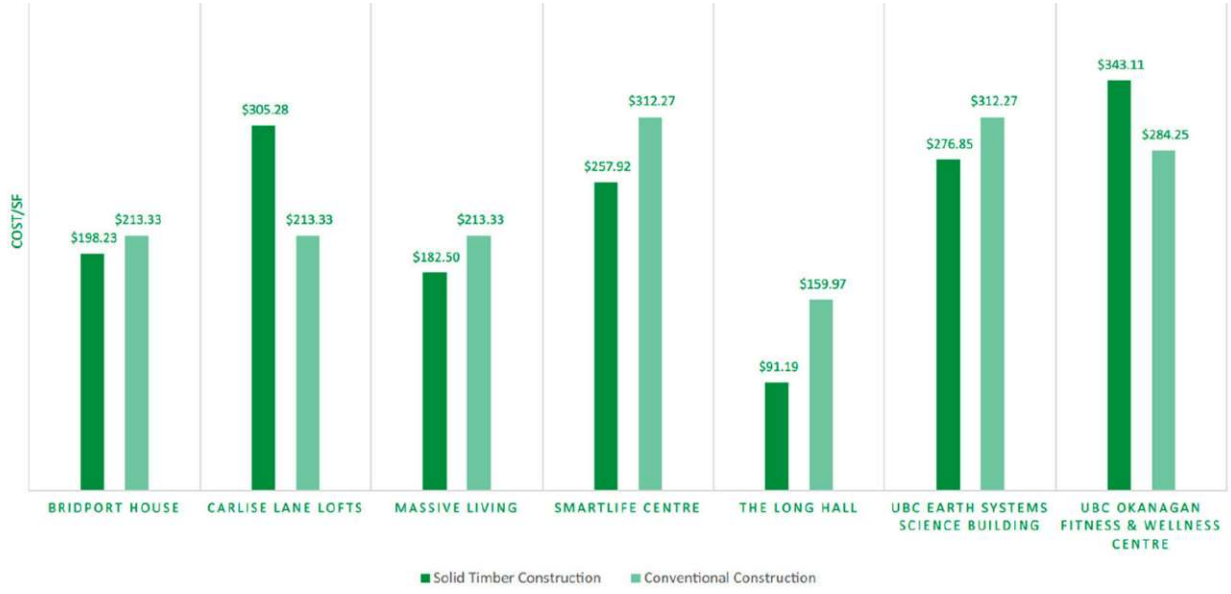

Figure 1.1. Cost per square foot comparison between solid timber construction (on the left) and conventional construction (on the right) for seven projects, showing a 4.2% average saving for wood (Smith et al., 2018)

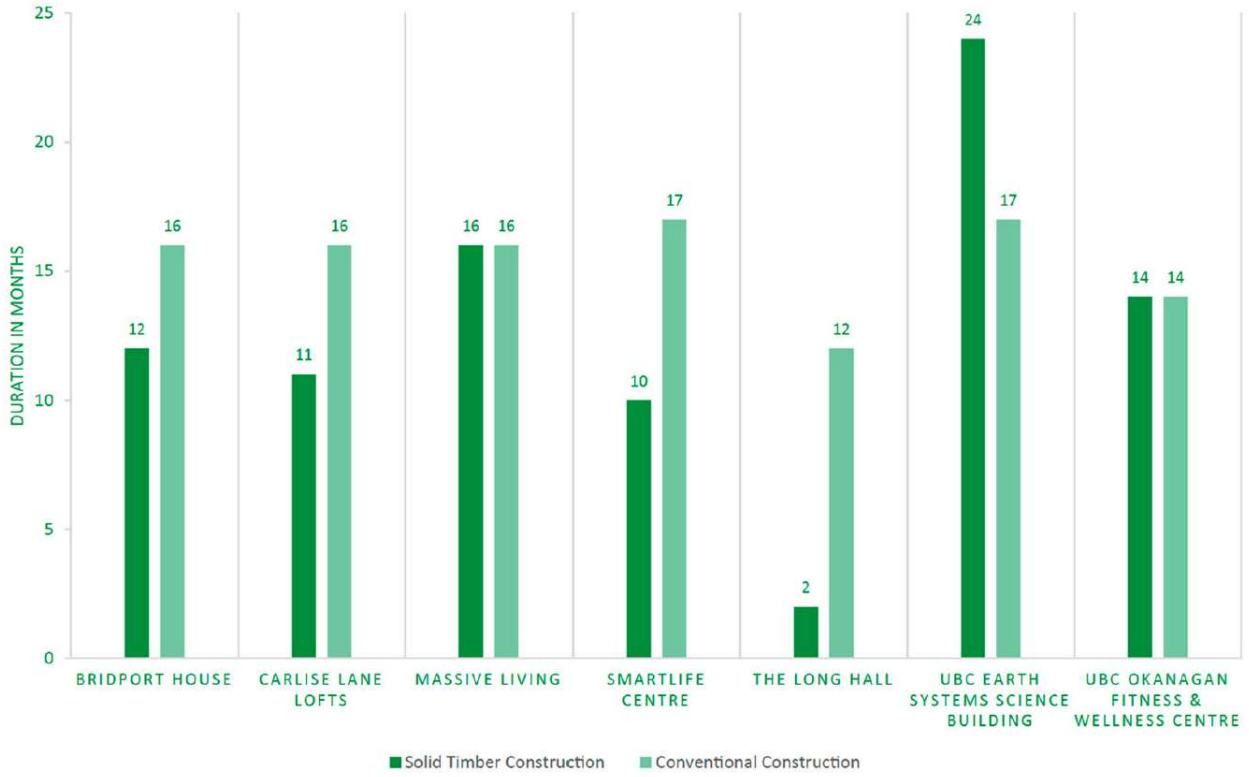

Figure 1.2. Schedule comparison between solid timber construction (on the left) and conventional construction (on the right) for seven projects, showing a 20% average schedule reduction for wood (Smith et al., 2018)

However, the use of wood and mass timber in construction has shown the possibility to exceed heights of 3 and 4 stories, with multiple projects exploring increasingly record heights around the world. The Binational Softwood Lumber Council (2014) conducted a series of surveys targeting key stakeholders that were involved in the construction of tall wood buildings (Figure 1.3).

PROJECT NAME	LOCATION	BUILDING TYPE	STOREYS	WOOD CONSTRUCTION TYPE	COMPLETION DATE
E3	Berlin, Germany	Commercial / Residential	7	Post and Beam	2008
Limnologen	Vaxjo, Sweden	Residential	8	Panelized	2009
Bridport House	London, England	Residential	8	Panelized	2010
3XGRÜN	Berlin, Germany	Residential	5	Combination Panels / Post and Beam	2011
Holz8 (H8)	Bad Aibling, Germany	Commercial / Residential	8	Panelized	2011
Forté	Melbourne, Australia	Commercial / Residential	10	Panelized	2012
University of British Columbia Earth Sciences Building (ESB)	Vancouver, Canada	Institutional	5	Combination Panels / Post and Beam	2012
LifeCycle Tower One (LCT One)	Dornbirn, Austria	Commercial	8	Combination Panels / Post and Beam	2012
Tamedia	Zurich, Switzerland	Commercial	6	Post and Beam	2013
Cenni di Cambiamento	Milan, Italy	Commercial / Residential	9	Panelized	2013

Figure 1.3. Tall wood building projects studied by the Binational Software Lumber Council (BSLC, 2014)

Although the study found that the design team typically required additional resources and time and that the Authorities Having Jurisdiction (AHJ) usually required additional documentation, the construction team usually reported the attainment of a faster construction schedule (BSLC, 2014). Additionally, most owners reported the willingness to pursue new tall wood projects (see Figure 1.4).

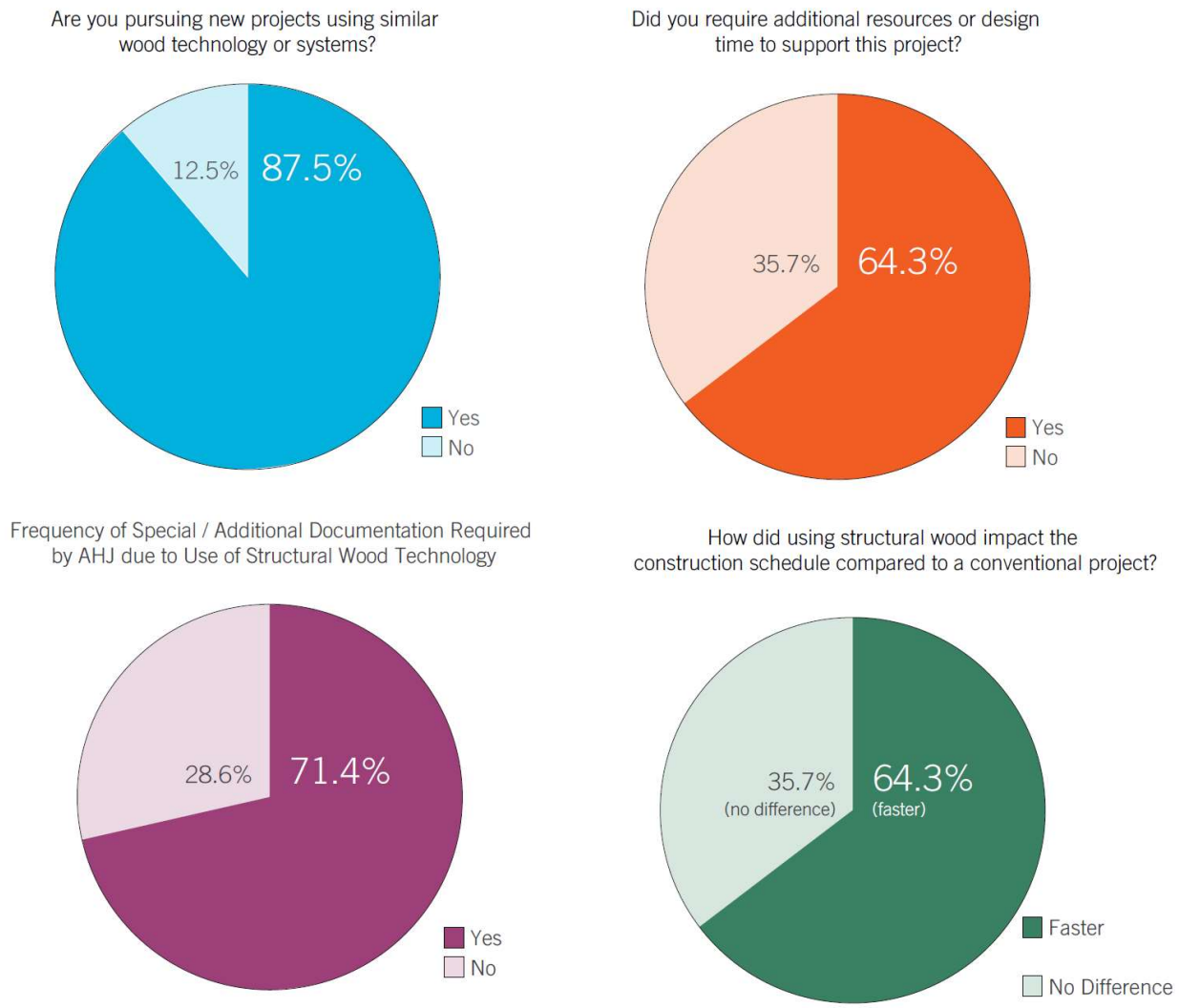

Figure 1.4. Summary of surveys (BSLC, 2014)

Table 1.2, extracted from the literature review conducted by Moudgil (2014), presents a list of additional tall wood building projects from around the world, indicating their location and height.

Table 1.2. Example of existing tall wood buildings (Moudgil, 2014)

Name	Location	Year	Stories
Limnologen	Växjö, Sweden	2009	8
Stadthaus	London, U.K.	2010	8
Bridport House	London, U.K.	2010	8
Holz8	Bad Aibling, Germany	2011	8
E-3	Berlin, Germany	2011	7
Forte	Melbourne, Australia	2012	10
Lifecycle Tower One	Dornbirn, Austria	2012	8
Pentagon II	Oslo, Norway	2013	8
Wagramerstrasse	Vienna, Austria	2013	7
Cenni di Cambiamento	Milan, Italy	2013	9
Maison de I'Inde	Paris, France	2013	7
Panorama Glustinelli	Triste, Italy	2013	7
TREET	Bergen, Norway	2015	14
Strandparken	Stockholm, Sweden	2014	8
WIDC	B.C, Canada	2014	8
Contrailminada	Liedo, Spain	2014	8
St. Die-des-Vosges	St.Die-des-Vosges, France	2014	8
Trafalgar Place	London, U.K.	2015	10
Banyan Wharf	London, U.K.	2015	10
Dalston Lane	London, U.K.	2015	10
Shoreditch	London, U.K.	2015	10

More examples of tall wood buildings and their presentation as case studies can be found in the studies conducted by Mayo (2015), Green et al. (2012), Fallahi (2017), and Poirier et al. (2016). Additionally, as innovation continues to take place and the advantages of implementing wood become recognized and obtainable by projects of different sizes, more tall wood projects are set to take place and break record heights in the future (Table 1.3).

Table 1.3. Upcoming tall wood building projects (Moudgil, 2014)

Name	City	Country	Stories
Wood City	Helsinki,	Finland	8
Arbora	Montreal	Canada	8
Carbon 12	Portland,	USA	8
Framework/Beneficial Bank	Portland,	USA	12
475 West 18th	New York	USA	10
HoHo	Vienna	Austria	24
Origine	Quebec City	Canada	13
Hypérion	Bordeaux	France	18

In this context, the Brock Commons Tallwood House (TWH) was recently built at the University of British Columbia (UBC). The TWH is currently the tallest wood building in the world, being an 18-storey student residence. This building was selected as the case study of this research and is further presented in Chapter 3.

1.2 Motivation

Although we are witnessing a resurgence in the use of wood in construction and the appearance of innovative technologies, materials, and construction methods, there is still a lot of work left to be done. As recognized by Mohammadi (2017), literature on the application of timber in tall buildings is rather scarce and is definitely not comparable to the amount of information and data available for steel and concrete systems. This lack of information can lead to scenarios of uncertainty and an erroneous perception of high risk. As discusses by Poirier et al. (2016), the implementation of mass timber in the TWH was feared to increase the amount of contingency and risk allocation in the hard bids of different trades. One of the strategies to mitigate this was to develop a detailed 4D model. “The project team hoped that the model would allow any trades to see that while the project was innovative in its use of mass timber, it was not a complex and

risky project" (Poirier et al., 2016). In fact, the TWH presented an ideal scenario for various trades since potential site conflicts and coordination issues were largely resolved during the design phase (Poirier et al., 2016).

This study aims to address this gap and help to position wood as a well-known and familiar material in high-rise construction. By doing this, this study hopes to diminish a potential sense of uncertainty that could surround future mass timber projects. To do this, the study is set to provide the industry and readers with in-depth information related to various practices that can be expected to take place in, or that are recommended for, mass timber high-rises. As such, this study presents lessons learned from the construction of the TWH (see Chapter 3). More specifically, this study focuses on the quality assurance (QA) and quality control (QC) practices that took place during the overall delivery of the project. As mentioned by Carrillo (2005), documenting and presenting lessons learned can help to:

- continuously test experience, and transform experience into knowledge;
- encourage the capture and dissemination of knowledge gained on past projects and enhance learning in future projects;
- reduce the risk of "reinventing the wheel" and avoid the repetition of mistakes;
- outline precise problems and describe successful and unsuccessful solutions.

1.3 Research Objectives

This study had two main objectives, which were:

- To identify and document some of the main QA/QC practices that were implemented during the design and construction of the TWH.

- To document the lessons learned from the application of the identified QA/QC practices.

Additionally, the following subobjectives were also pursued:

- To determine if the observed QA/QC practices are common or uncommon to project participants and the local industry.
- To determine if the observed QA/QC practices were appropriate and compliant with the project requirements.
- To identify the QA/QC practices, if any, that were implemented specifically in response to the use of mass timber elements.
- To be a first step towards providing the Canadian construction industry with guide specifications for mass-timber high-rise construction.

1.4 Scope

This study focused on the QA/QC practices that responded to the mass timber component of the building. Although this research studied several QA/QC practices that were not directly linked to the mass timber elements, an emphasis was made on understanding if and how they had to be modified or adapted due to the implementation of mass timber elements as part of the building's structure. Whenever practices were observed to be common and unrelated to the mass timber nature of the building, their review and description in this thesis was omitted or completed at a more superficial level.

Additionally, this research only considered the QA/QC practices that were applied to:

- The building's structure

- The building's envelope
- The mechanical and electrical systems

Finally, this study focused on the QA/QC practices that were implemented during design and construction of the TWH. As a clarification, this study considers commissioning to be a process and not a phase that takes place after the construction of a facility. This view of commissioning is in line with the definition of the ASHRAE Guideline 0. As a result, various QA/QC practices that were part of the commissioning process are also presented in this thesis.

1.5 Methodology

The following sequential methodology was followed to obtain the objectives of this thesis:

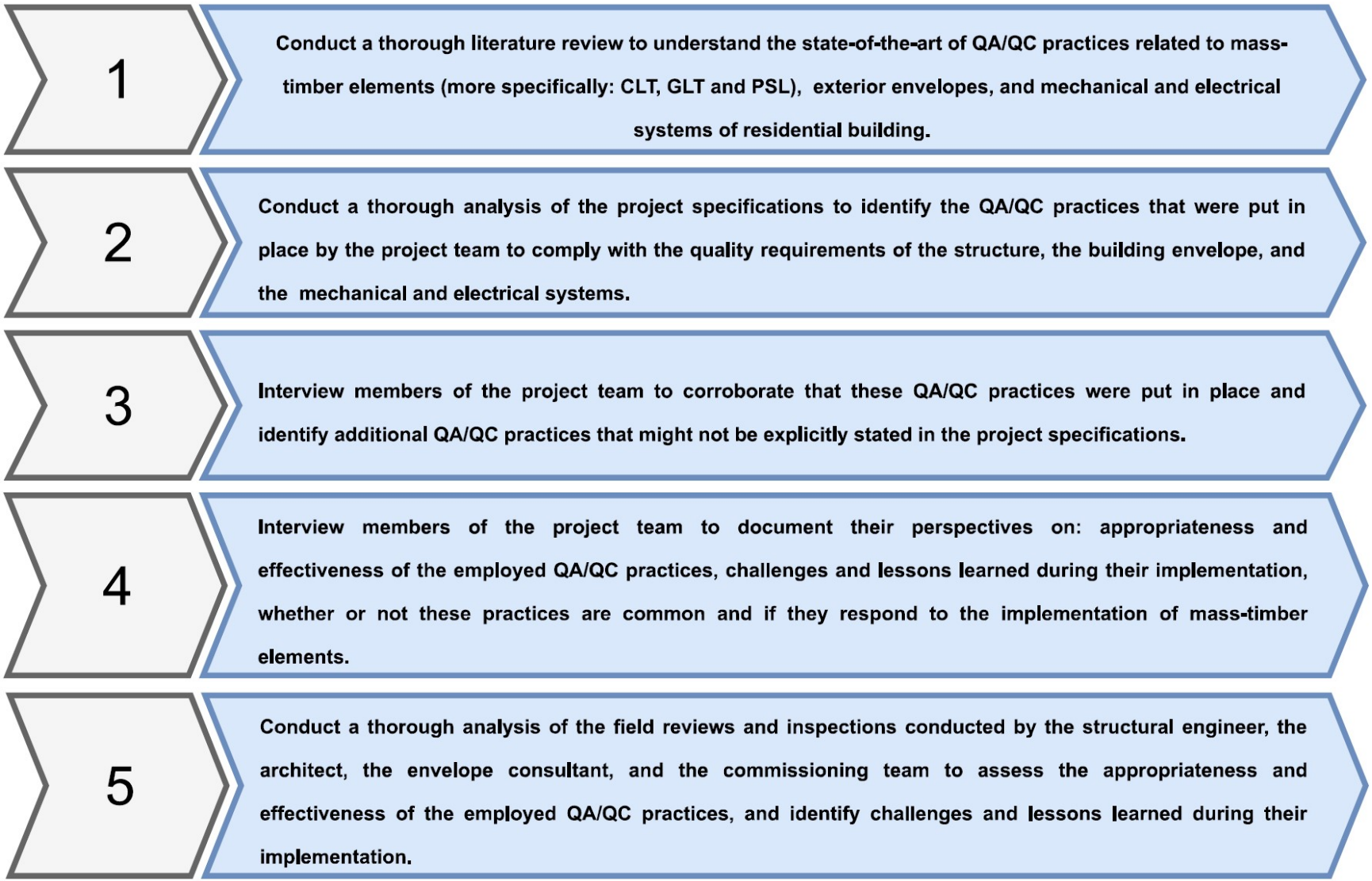

Figure 1.5. Methodology

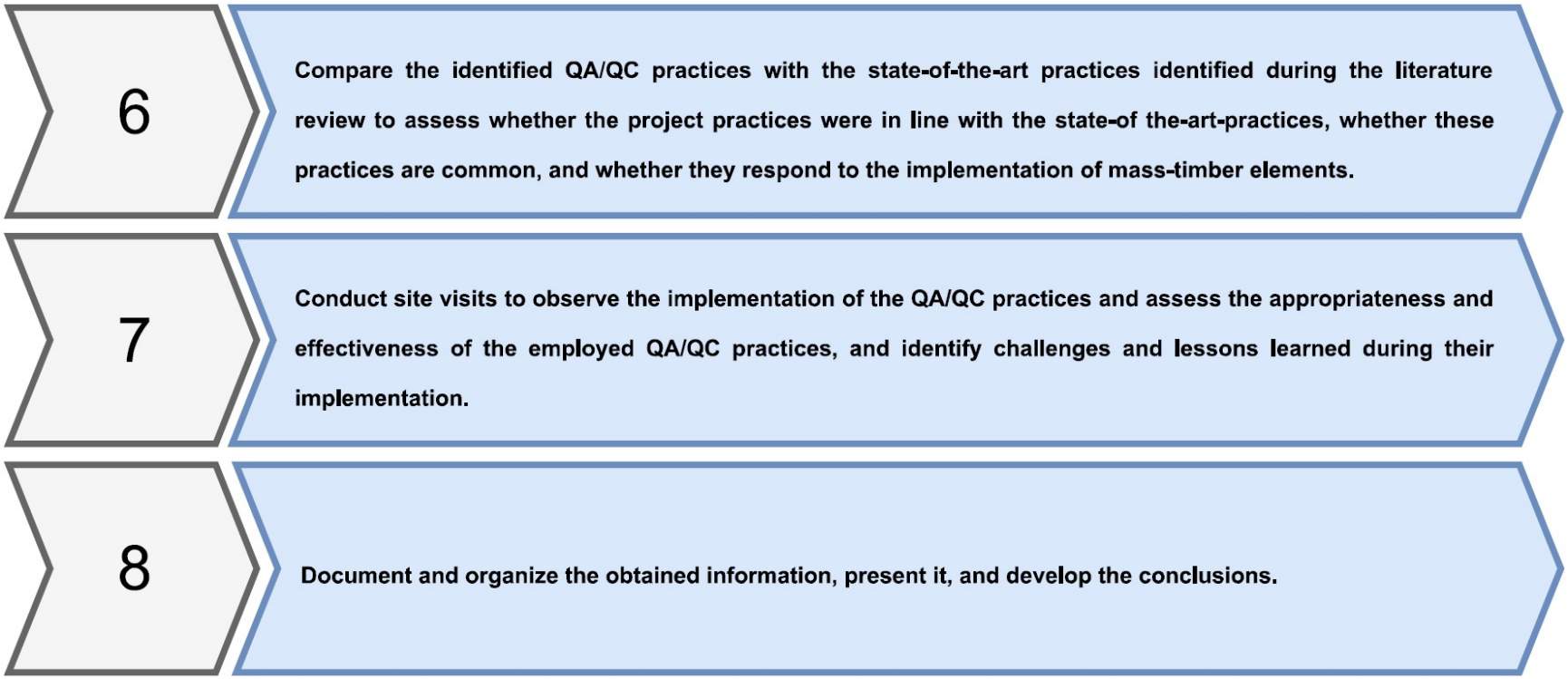

Figure 1.5. Methodology

Steps one, two, and three were not always strictly sequential, more specifically:

- Analyzing the project specifications (step 2) allowed the identification of industry standards that were then used as part of the literature review (step 1).
- The same held true when interviewing the members of the project team. In several cases they were able to signal industry standards that were relevant for the literature review of this thesis.

Additionally, the site visits that were conducted as part of this thesis begun on June 2017, when the construction of the building was reaching its final stages. As a result, the site visits were only able to capture information related to the commissioning process. This, however, was not seen to be an issue since the project team was very open to collaborate with this study and to provide historical information. Additionally, this study found a rather rich project documentation describing the construction process. This documentation included reports from field reviews with extensive photographic records. Some of these images have been shared by the project team and are presented as part of this study. Finally, the TWH has been treated as a showcase project and numerous reports and studies have been conducted in the past, including Fallahi (2017), Kasbar (2017), and Poirier et al. (2016). All this literature helped to develop a deep understanding related to different design and construction processes and the project as a whole.

The list of interviewees is presented in Table 1.4, the different sections of the project specifications that were reviewed are presented in Table 1.5 and the list of project documents that were reviewed is presented in Tables 1.6. The list of standards that were analyzed to comprehend the state-of-the-art practices is presented in section 2.3 (see Table 2.3, Table 2.4 and Table 2.5) as part of the literature review.

Table 1.4. List of interviewees

Date	Position	Topic
June, 2017	Director of Energy Planning and Innovations at UBC	LEED & commissioning at UBC, goals and drivers.
June, 2017	BMS Manager, Energy and Water Services at UBC	Building Management Systems at UBC.
June, 2017	Commissioning Authority at TWH	Commissioning process at the TWH.
June, 2017	Superintendent Asset Stewardship, Building Operations at UBC	UBC Commissioning Technical Guideline. Role of UBC Building Operations. Relationship between Building Operations and Student Housing and Hospitality Services (SHHS).
July, 2017	BMS Technical Specialist, Energy and Water Services at UBC	Specifics of the Building Management System (BMS) installed in the TWH.
July, 2017	Trades Manager and Director of Facilities and Building Services, SHHS at UBC	TWH Owner's Project Requirements. Role of SHHS. Experiences with the design and execution of the project.
July, 2017	Commissioning Agent for various UBC projects	Commissioning at UBC. Owner's Project Requirements, Commissioning Requirements and their inclusion in the Contract Documents, lines of communication, deliverables, and benefit to the client.
July, 2017	Commissioning Authority at TWH	Commissioning process at the TWH (cont.).
July, 2017	Mechanical Commissioning Agent at Brock Commons	his role in the commissioning team, lines of communication, and carried activities.
August, 2017	Superintendent at TWH	Structure QA/QC practices during execution.
August, 2017	TWH building operator	His experience operating other SHHS buildings, his expectations about the TWH, his use of the BMS, and his day to day activities.
August, 2017	Managing Director, Infrastructure Development at UBC	TWH Owner's Project Requirements, design stage, 3D model.
August, 2017	Commissioning Authority at TWH	Commissioning process at the TWH (cont.).
August, 2017	Mechanical Commissioning Agent at Brock Commons	His role in the commissioning team, lines of communication, and carried activities (cont.).
September, 2017	Envelope consultant engineer	Field reviews done by the Envelope Consultant, assessment of weather protection plan, envelope testing and performance.
September, 2017	Project engineer of the structural engineering firm	QA/QC of the structure and the structural elements.
October, 2017	Mass Timber Manufacturer Quality Control Manager	QA/QC of timber elements during manufacture.
November, 2017	Envelope Contractor Manager of Development and Technology	QA/QC of the envelope during manufacture, envelope testing and mockup.
November, 2017	Mass Timber Manufacturer Detailing Department Supervisor	QA/QC of timber elements during manufacture.
March, 2018	Mass Timber Manufacturer Detailing Department Supervisor	QA/QC of timber elements during manufacture.

Table 1.5. Review of project specifications

Section	Information
01 35 18: LEED Requirements	Obligations of contractors and subcontractors related to LEED Certification. Fundamental Commissioning and Verification. Enhanced Commissioning.
01 45 00: Quality Control	Inspection and testing requirements. Procedures to be followed in case of encountered defects.
01 45 50: Measurement and Verification	Commissioning roles of the Cx Authority, Cx Agents and contractors. Performance tests and training requirements.
01 75 16: Start-up Procedures	Role of the Cx Authority, Construction Manager, and contractors. Documentation requirements and procedures. Mandated reviews.
01 75 19: Testing Adjusting and Balancing	Rationale and purpose of testing. Roles and responsibilities. Documentation requirements.
01 77 00: Contract Closeout	Requirements for completion.
01 78 10: Closeout Submittals	Documentation requirements. Mandated reviews.
01 91 00: Commissioning	Goals of commissioning. Participants, responsibilities, documentation and general execution.
06 15 23: Cross Laminated Timber Panels	QA/QC of cross laminated timber (CLT) panels. Requirements and mandated standards.
06 18 19: Glued-Laminated Structural Units	QA/QC of glued-laminated timber (GLT) columns. Requirements and mandated standards.
06 18 20: Structural Composite Lumber	QA/QC of parallel strand lumber (PSL) columns. Requirements and mandated standards.
07 05 00: Prefabricated Unitized Wall and Glazing System	QA/QC of envelope panels. Requirements and mandated standards.
21 08 00: Commissioning of Fire Suppression	List of fire suppression equipment and systems to be commissioned. Responsibilities of contractors and manufacturer's.
22 08 00: Commissioning of Plumbing	List plumbing equipment and systems to be commissioned. Responsibilities of contractors and manufacturer's.
23 08 00: Commissioning of HVAC Systems	Commissioning during construction. Definition and intent of commissioning, sub-phases of commissioning during construction. Responsibilities of the Cx Authority, General Contractor, and other members of the Cx Team.

Table 1.6. Review of other project documents

Document	Information
Envelope Consultant Field Reviews	Assessment of weather protection plan. Field reviews of the facilities of the Envelope Contractor and Glazing Contractor. Reviews of mockup and onsite tests of the building envelope.
Mass Timber Manufacturer Shop Drawings	Reviews and comments done by the Architect, Structural Engineer, and VDC Modeler. Details of timber elements and connections.
Mass Timber Installer Installation Method Statement	Reviewed by the structural Engineer. Installation sequence, temporary loading conditions and bracing of the structure during installation.
Envelope Contractor Shop Drawings	Reviews and comments done by the Architect, Structural Engineer, and VDC Modeler. Details of envelope panels, installation process.
Envelope Testing Agency Test Report	Conditions and results of envelope tests.
Commissioning Plan	Project team organization, lines of communication, commissioning activities, goals, and schedule.
Owner's Project Requirements	High level project requirements and goals.
Commissioning Meeting Minutes	State, progress and next steps of the commissioning process.
Commissioning Design Review Report	Assessment of compliance with the project specifications.

1.6 Research Outline

This thesis has been structured resembling the methodology that was put in place to obtain the research objectives, more specifically:

- Chapter 2 presents the literature review that was carried as part of this study. This literature review:
    - Explores the concept of quality in construction, as well as quality assurance and quality control.
    - Explores the concept of project specifications and introduces the concept of guide specifications.

    - Presents the state-of-the-art of QA/QC practices in the area of mass timber structural elements, building envelopes, and mechanical and electrical systems of residential buildings.

- Chapter 3 presents the TWH as the case study of this research and provides the reader with general information about the project.
- Chapter 4 presents the QA/QC practices related to the structure of the building, including the ones that more specifically apply to the mass timber elements.
- Chapter 5 presents the QA/QC practices related to the building envelope.
- Chapter 6 presents the QA/QC practices related to the building mechanical and electrical systems.
- Chapter 7 summarizes the lessons learned presented throughout chapters 4, 5 and 6 and highlights opportunities for improvement and future studies.

Chapter 2: Literature Review

2.1 Quality in Construction

This literature review has found different definitions and approaches to quality. McCabe (2017) goes as far as stating that it is debatable whether or not we can give an exact and definitive definition to the concept of quality. She also states that quality appears to be in the eyes of the beholder, in which case the concept becomes a subjective matter (McCabe, 2017). The Transportation Research Board (2013), which is a division of the National Research Council of the United States, presents three definitions of quality:

- Degree of excellence of a product or service
- The degree to which a product or service satisfies the needs of a specific costumer
- The degree to which a product or service conforms with a given requirements

Contrasting with this, Chini and Valdez (2003) argue that quality should not be used as an expression of degree of excellence, and that it should refer to fitness for purpose. Arditi and Gunaydin (1997) present different definitions of quality, with each one coming from analyzing the concept from a different point of view. These points of view include a functional one, a legal one, an aesthetic one, and an industrial one. In any case, abundant literature discusses the topic of quality, both generally and in the context of a construction project. While it appears to be challenging to unambiguously define quality, several sources position quality as one of the cornerstones of a construction project and consider its fundamental relationship with other crucial parameters, such as cost and environmental responsibility (Goldbloom, 1989; Sherrat, 2015).

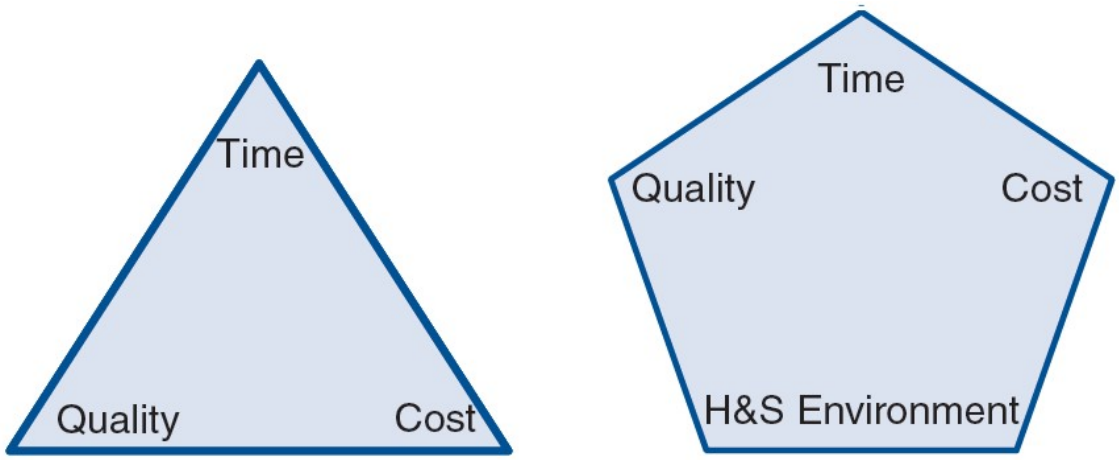

Figure 2.1 Production management triangle and production management pentagon (Sherrat, 2015)

While the purpose of this study is not to participate in the discussion of what should be defined as quality, a comprehensive definition of the term is required to establish a framework to study it and how it was approached in the TWH. According to the International Organization of Standards (IOS), quality can be defined as the degree to which a set of inherent characteristics of an object fulfill requirements (IOS, 2015). This definition is presented and used throughout the IOS 9000 Series standards, which is a "set of international standards on quality management and quality assurance developed to help companies effectively document the quality system elements to be implemented to maintain an efficient quality system" (ASQ, 2018).

The adoption of IOS 9000 is widespread in the construction industry and worldwide. Kam et al. (1997) stated that most of the largest European construction companies had an IOS 9000 certification by the late 1980s. He also mentions that by 1989, Singapore and Hong Kong were implementing strategies to improve quality in public construction that involved requesting contractors to have an IOS 9000 certification (Kam et al., 1997). The annual surveys carried by IOS indicate that the adoption of IOS 9000 in the construction industry has substantially

increased since 1998 and is still relevant to this day. In 1998 IOS reported that 19768 companies from the construction industry had a standing certification, by 2016 this number increased to 87605. To put this number in perspective, the construction industry accounts for almost 10% of the total amount of IOS 9000 certifications and is the sector with third the highest number of certifications, being just 877 certifications below the second largest. Furthermore, several independent studies have concluded that IOS 9000 is applicable and can benefit the construction industry, firms, and projects (Chini and Valdez, 2003; Din et al., 2010; Turk, 2005).

For the purposes of this study, quality in construction has been defined as "**meeting the requirements of the designer, the regulatory agencies, and the owner**" (Jraisat et al., 2015). This definition is essentially the same or similar to the definition given by various authors (Chini and Valdez, 2003; Jiang, 2011; Rajendran et al., 2012; Sherrat, 2015; Turk, 2005; USACE, 2004) and is in line with the definition given by IOS. Additionally, this definition is useful in that it eliminates ambiguity and subjectivity, establishing concrete parameters that can be used to assess quality.

With quality defined, the purpose of this thesis was do identify and study some of the practices and activities that were planned and performed by the project team to comply with the quality requirements. This literature review found that these practices and activities are closely linked to quality assurance and quality control. However, as with the concept of quality, QA and QC were not found to be unanimously and uniquely defined across different studies and publications. Different definitions of QA and QC are presented in Table 2.1.

Table 2.1. QA/QC definitions

Source	Concept	Definition
Sherrat, 2015	QA	Clearly stating what is going to be done to achieve quality, writing it down as a formal quality management system, execute the quality management system.
	QC	Carrying out inspection of work or sampling of materials to ensure that the requirements are being met.
O'Brien, 1997	QA	All the planned and systematic actions necessary to provide adequate confidence that a structure, system or component will perform satisfactorily and conform with project requirements.
	QC	Part of QA. The specific procedures involved in the quality-assurance process.
Tang et al., 2005	QA	All the planned and systematic actions necessary to provide adequate confidence that a structure, system or component will perform satisfactorily and conform with project requirements.
	QC	Part of QA. It is the specific implementation of the QA programme and related activities.
Low et al., 2014	QA	Is a process which verifies that QC has been addressed by dealing with policies and procedures associated with hiring, training, subcontracting and procurement to effectively realize good craftsmanship and workmanship.
	QC	Deals with issues relating to conformance to the plans and specifications.
Rajendran, 2012	QA	Activities that validate the effectiveness of the quality control.
	QC	Individual activities, such as inspecting and testing, by which conformance to the project specifications is validated.
McCabe, 1998	QA	All the planed activities to provide adequate confidence that the quality requirements will be fulfilled.
	QC	Operational technique and activities that are used to fulfil requirements of quality.
Jraisat et al., 2014	QA	The program.
	QC	The specific implementation of the QA program.
Arditi and Gunaydin, 1997	QA	A program covering activities necessary to provide quality in the work to meet the project requirements.
	QC	The specific implementation of the QA program.
TRB, 2013	QA	All the planned and systematic actions necessary to provide confidence that a product or facility will perform satisfactorily. Making sure that the quality of the product is what it should be.
	QC	The system used by a contractor to monitor, assess and adjust their production or placement process to ensure that the final product will meet the specified level of quality.
Goldbloom, 1989	QA	A function of the Owner's site representative. Involves monitoring the Contractor's work for conformance to the requirements of the Contract.
	QC	The Contractor's responsibility. Procedures to control and guide operations to produce the desired results.

Table 2.1. QA/QC Definitions

Harris, 2005	QA	The inspection, testing, and other relevant actions taken (often by an owner or his representative) to ensure that the desired level of quality is in accordance with the applicable standards or specifications for the product or work.
	QC	The inspection, analysis, and other relevant actions taken to provide control over what is being done, manufactured, or fabricated, so that a desirable level of quality is maintained.

As it can be seen in Table 2.1, an important part of the literature sees QC as being part of QA, with QA being the process of planning and executing the necessary actions to comply with the quality requirements. This definition is in line with the IOS definition of quality assurance (QA). According to IOS (2015), quality assurance is the part of quality management that focuses on providing confidence that quality requirements will be fulfilled. Additionally, IOS (2015) defines quality control as the part of quality management focused on fulfilling quality requirements. Following this line, the following terms will be used:

- Quality assurance: practices and activities that were planned and executed by the project team to provide confidence that quality requirements will be fulfilled.
- Quality control: practices and activities that were planned and executed by the project team to fulfill quality requirements.

2.2 The Project Specifications

The project specifications of the TWH were the main source used to identify and study the QA practices implemented in the project. This practice was adopted based on the idea that the project specifications define the overall quality of the project (ASCE, 2013). This practice has also been deemed appropriate since the project specifications of the TWH were found to be comprehensive and in line with recommended and good practices found in literature. These included

recommendations made by the Construction Specifications Institute (CSI) and the Committee on Specifications of the Construction Institute of the American Society of Civil Engineers (ASCE). This literature review presents a brief overview of some of the good practices and challenges related to the development of project specifications. While the purpose of this study was not to evaluate completeness or appropriateness of the THW's specifications, it was intended to be a first step towards providing the Canadian construction industry with ***guide specifications*** for mass-timber high-rise construction. Therefore, this literature review also presents the topic of guide specifications and its potential advantages.

According to the ASCE (2013), the project specifications provide written administrative and technical requirements of a construction project. According to the ASCE (2013), this document should:

- Describe the work to be performed.
- List applicable references, codes, and standards.
- Dictate the type of quality of materials to be supplied.
- Dictated the methods of construction or required finished properties.
- List the testing and inspection requirements.

The specifications of the TWH were observed to contain all this information and also to be written in a style suggested by the CSI (2011) which includes:

- Avoiding ambiguity and using and clear and simple sentence construction.
- Being concise, eliminating unnecessary words without compromising completeness and clarity.

- Presenting information in a correct manner, being accurate and precise.
- Not leaving out important information.

ASCE (2013) presents the results from studies, which included sending questionnaires to industry professionals, aimed at capturing some of deficiencies that can be found in the specifications of construction document and that should be avoided. These deficiencies are summarized in Table 2.2.

Table 2.2 Common deficiencies found in project specifications

Deficiency	Consequence
Conflicts between different sections of the specifications.	Guesswork and disagreement in the field. Loss of confidence in the document.
Complicated grammatical instructions and poor use of English.	Interpretation challenges.
Information that is out of place or difficult to locate within the document.	The clause may not be referenced when a change is made. Conflicts between sections or between the specifications and other documents can arise.
Missing information required to ascertain the type, quality, or importance of a work item.	Guesswork and disagreement in the field.
Unattainable results or inappropriate tolerances.	Loss of confidence in the whole document that can lead to ignore reasonable requirements.
Extraneous and superfluous information. References to unneeded specifications and standards.	Questioning the applicability of all requirements.
Over-specification of methods rather than results.	Can reduce the intended responsibility of the contractor.

ASCE (2013) also presents recommended practices to avoid the identified recurring issues. A total of 21 practices are recommended, some of which are presented below:

- Provide a clear and concise scope of work.
- Use the format suggested by the Construction Specifications Institute or another applicable industry standard format.

- Promote cooperation between field engineers, contractors, designers and owners.
- Emphasize performance specifications over descriptive.
- Make a comprehensive review of plans and specifications and coordinate them.
- Clearly define the codes and standards, or the specific portions and section, that apply.
- Use of standard of guide specifications.

As it can be seen, implementing guide specifications is one of the practices recommended by ASCE (2013). Guide specifications, also called standard or master specifications, can be simply defined as a compendium of clauses (Lam et al., 2004), or a book of specifications intended for general applications and repetitive use (Glodbloom, 1989). These clauses serve as a library that can be accessed by the project's specification writer(s) to extract the ones that are applicable to the project in question (Goldbloom, 1989). These clauses are then incorporated in the project specifications with little or no modifications. Goldbloom (1989) mentions that one of the advantages of standard specifications is that they reduce the chances of accidental omissions. More importantly, guide specifications help the specifier(s) to create the specifications of unfamiliar or complex portions of the work. ASCE (2013) recommends to use guide specifications whenever available. Otherwise, it is recommended for the specifier(s) to research the required information from various industry sources and to avoid over-specifying or setting standards that might be higher than necessary (ASCE, 2013). A case study that observed the process followed by a specifier to develop the project specifications is presented by Emmit (2001).

However, the use of guide specifications also requires caution. Carelessly copying clauses from guide specifications can lead to mistakenly including requirements that are not related to the work, or incomplete specifications (ASCE, 2013). The specifier(s) must make sure that the guide specifications are relevant and edit the clauses as needed to better fit the project. In his study, Lam et al. (2004) found project specifications that were based solely on guide specifications, lacking the necessary edition or inclusion of additional information. This practice can result in several clarifications being necessary during construction and conditions the capacity of the project specifications to effectively serve its purpose (Lam et al., 2004).

This literature review could not find guide specifications for mass-timber construction in Canada or elsewhere. However, this literature review demonstrates that developing such document could help to promote and standardize good practices and provide the project team with a useful source of information to establish appropriate requirements for a mass timber project. A sample of a comprehensive guide specifications document, although focused on steel moment-frame construction, is presented by the Federal Emergency Management Agency (2000).

2.3 QA/QC Practices (State-of-the-Art)

This section presents the standards that were analyzed as part of this literature review to understand the state-of-the-art QA/QC practices related to the mass timber elements, the building envelope, and mechanical and electrical systems. The name of the standards and a description are presented in Table 2.3, Table 2.4, and Table 2.5. A detailed presentation and discussion of the relevant information within these standards is presented throughout Chapters 4-6 whenever they become relevant.

Table 2.3. Reviewed industry standards - mass timber elements

Standard	Information
ANSI/PRG 320	Manufacturing and QA/QC requirements for CLT panels.
CSA O122	Minimum requirements to manufacture glued-laminated products that comply with CSA O86.
CSA O177	Qualification code for manufacturers of structural glued-laminated timber.
CSA O86	Criteria for the structural design and appraisal of structures and structural elements made from wood, including PSL column

Table 2.4. Reviewed industry standards - building envelope

Standard	Information
ASTM E283	Rate of air leakage under specified pressure differences test in a laboratory setting.
ASTM E331	Water penetration by uniform static air pressure difference test in a laboratory setting.
AAMA 501.1-17	Water penetration using dynamic pressure test in a laboratory setting.
ASTM E330	Structural performance by uniform static air pressure difference test in a laboratory setting.
AAMA 501.5-07	Thermal cycling test in a laboratory setting.
AAMA 501.4-09	Static inter story drift test in a laboratory setting.
ASTM E1105	Field determination of water penetration.
ASTM E1186	Field air leakage site detection.
ASTM E783	Field measurement of air leakage.

Table 2.5. Reviewed industry standards - mechanical and electrical systems

Standard	Information
ASHRAE Guideline 0-2013	Building commissioning process and practices recommended by ASHRAE.
LEED Fundamental and Enhanced Commissioning Guidelines	Guidelines detailing the LEED requirements for Fundamental and Enhanced Commissioning.

Chapter 3: Case Study

The TWH is an 18-story hybrid mass timber high-rise that employs cross-laminated timber (CLT) panels, glued-laminated timber (GLT) columns, and parallel strand lumber (PSL) columns in combination with reinforced concrete elements. The building houses 404 students in single and quad occupancy units. A rendering of the structure is presented in Figure 3.1.

Figure 3.1. Rendering of the TWH structure (courtesy of Urban One Builders)

A view that focuses on the reinforced concrete elements of the building is presented in Figure 3.2. As it can be seen, the building utilizes a concrete foundation and two concrete cores. Additionally, the columns of the Level 1 and the slabs of Level 1 and Level 2 are also made of reinforced concrete. All of these elements employed cast-in-place concrete.

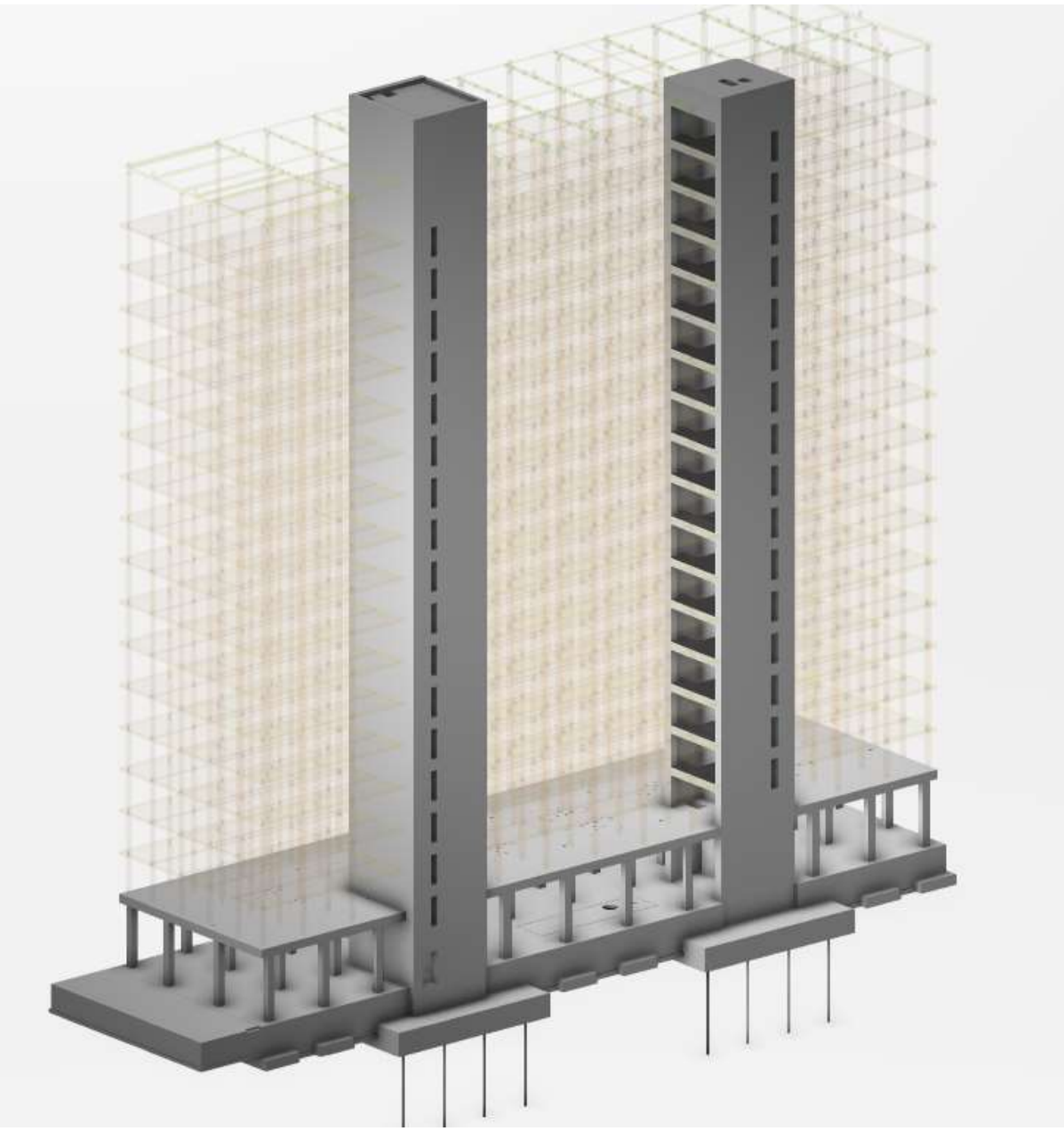

Figure 3.2. Rendering of the TWH concrete structural elements (courtesy of Urban One Builders)

A view that focuses on the mass timber elements is presented in Figure 3.3. As it can be seen, slabs from Level 3 to Level 18 are made of CLT panels. Additionally, columns from Level 2 to Level 5 are a combination of GLT and PSL. A typical floor plan of levels 2 to 5 is presented in Figure 3.4, where all PSL columns are clearly signaled (all other columns are made of GLT). From Level 6 onward, only GLT columns were employed. The columns and panels can be visualized in Figure 3.5 and Figure 3.6.

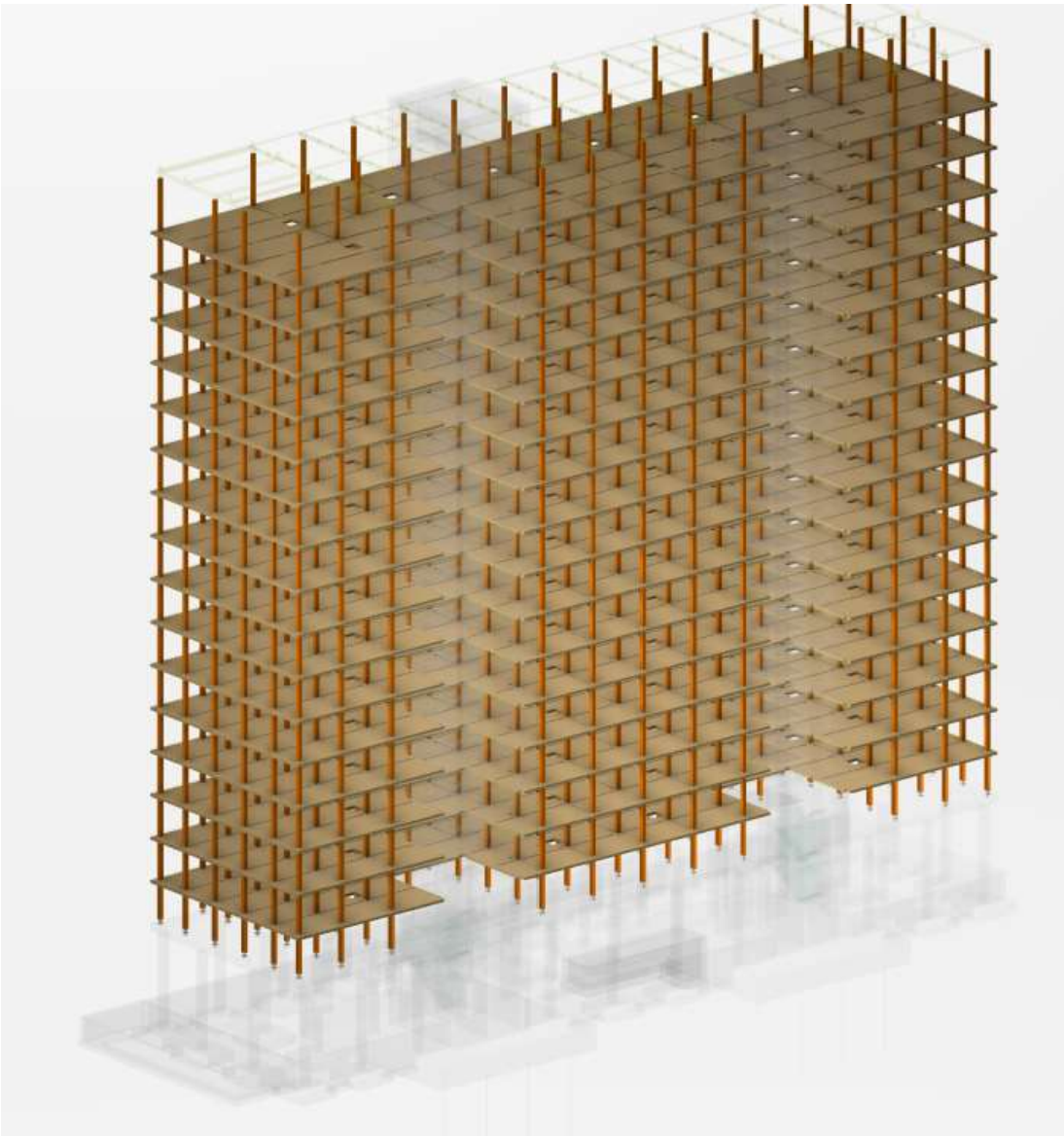

Figure 3.3. Rendering of the TWH mass timber elements (courtesy of Urban One Builders)

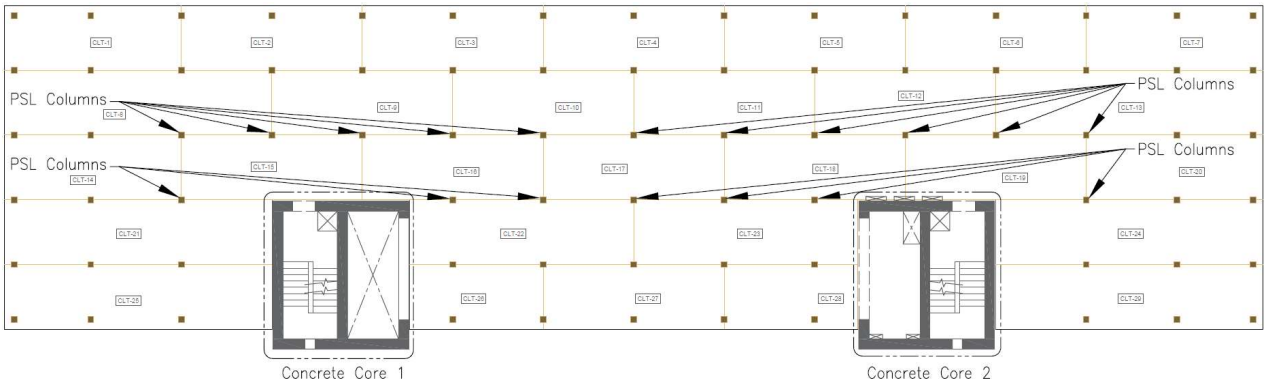

Figure 3.4. Typical floor plan of levels 2-5 (courtesy of Urban One Builders)

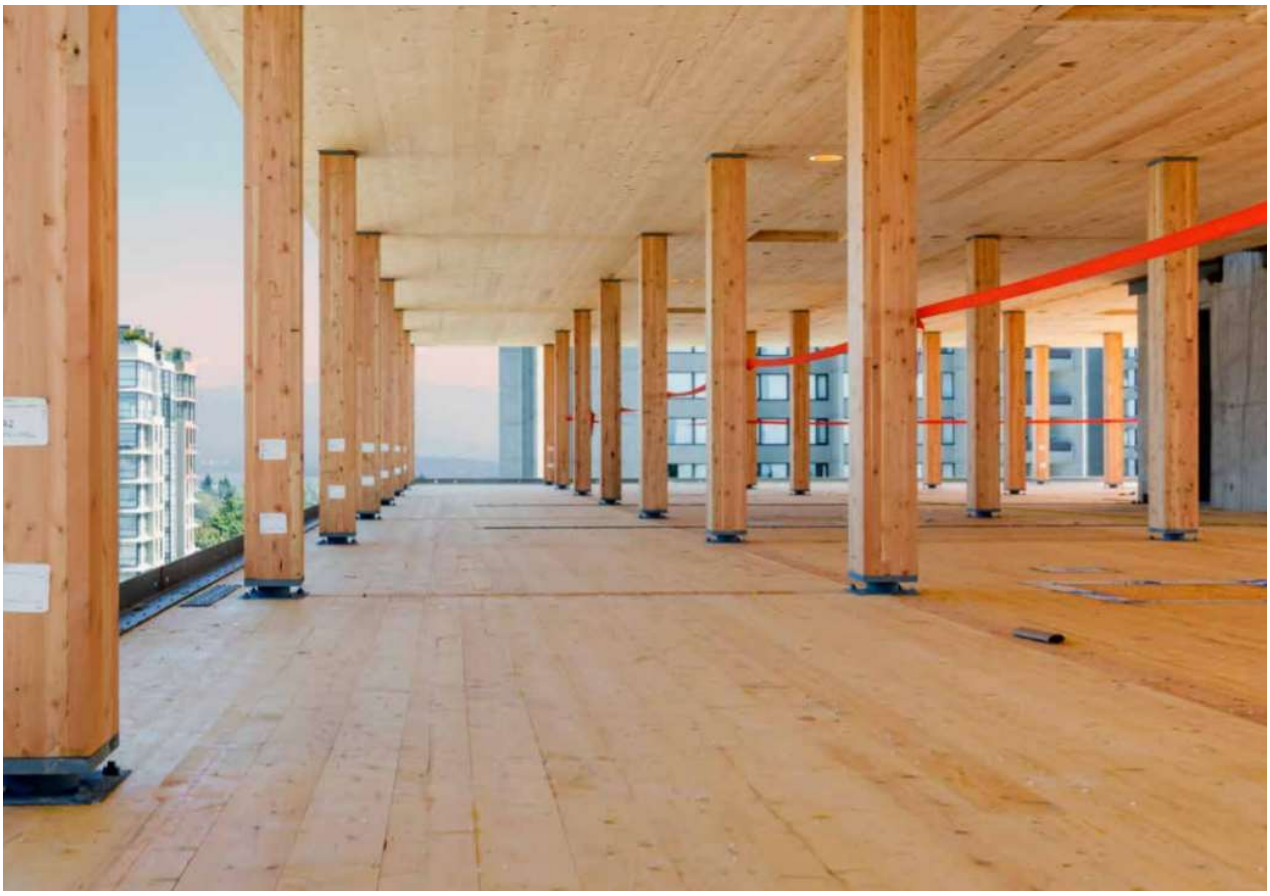
Figure 3.5. Mass timber columns and panels (UBC CIRS, 2017)

Figure 3.6. Mass timber columns and panels II (UBC CIRS, 2017)

The TWH employed an envelope made out of 13 types of prefabricated envelope panels (see Figure 3.7). The envelope panels were secured by connecting them to a continuous steel angle placed at the edge of the CLT panels (see Figure 3.8). A detail of the connection is presented in Figure 3.9.

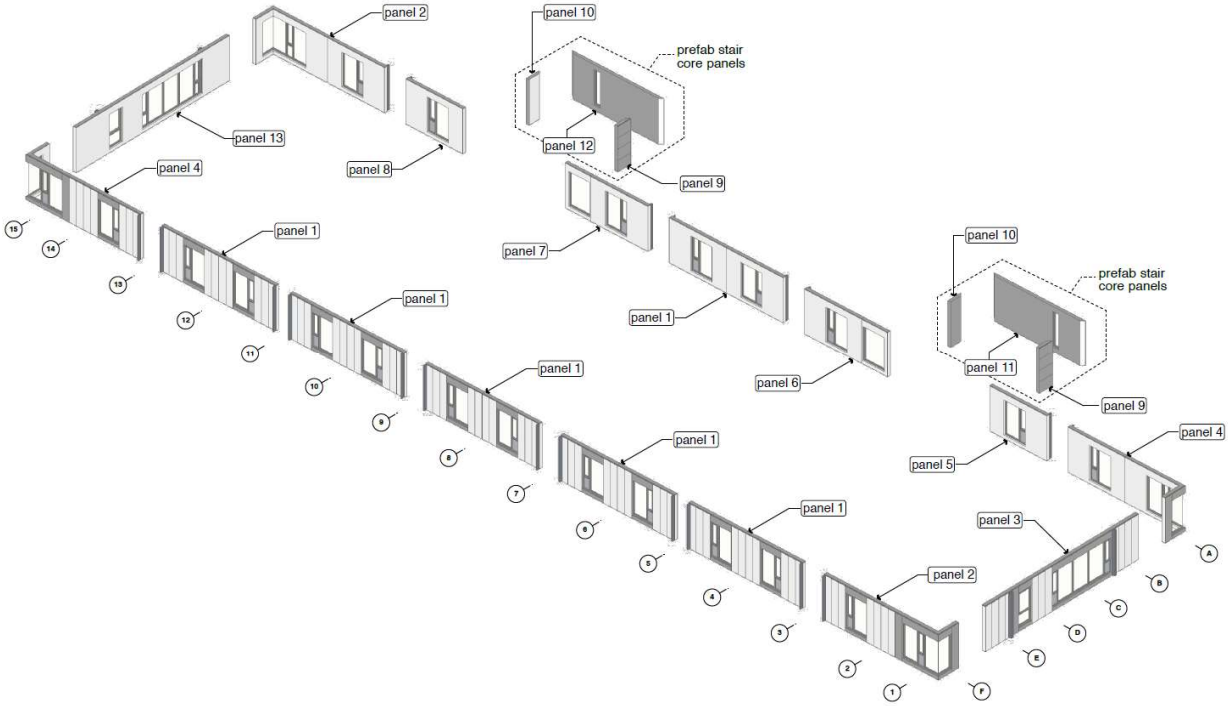

Figure 3.7. Prefabricated envelope panels (courtesy of Urban One Builders)

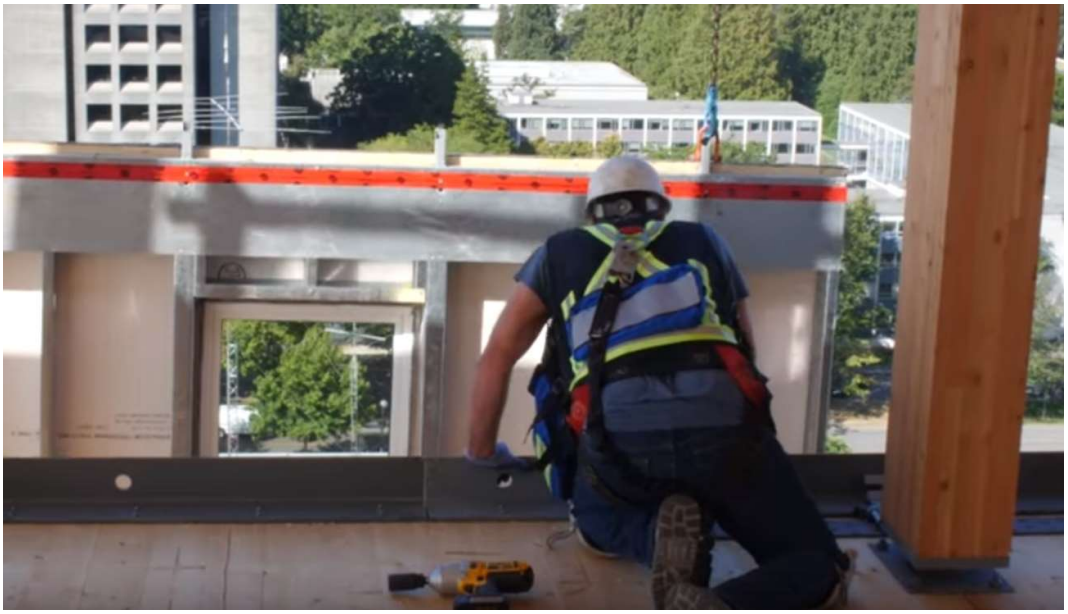

Figure 3.8. Continuous steel angle at the edge of the CLT panels

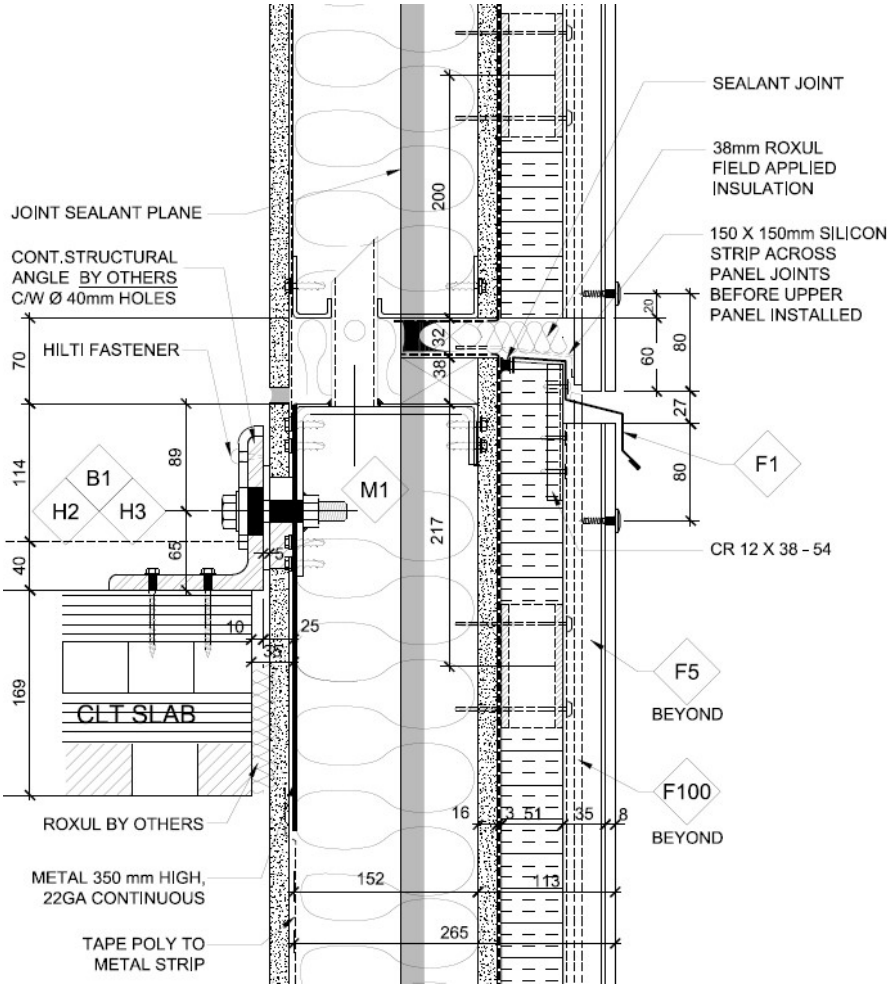

Figure 3.9. Envelope connection detail (courtesy of Urban One Builders)

As it can be seen in Figure 3.7, the tops of the envelope panels are bolted to the continuous steel angle at the edge of the CLT panels, with these being the only connection between the panels and the structure. Besides these, the panels connect with one another employing a male-to-female connection (also seen in Figure 3.9). This type of panel-to-panel connection was easy to manage onsite, requiring only one worker to align the bottom of the panels being installed (see Figure 3.10 and Figure 3.11). More details and information about the TWH can be found in the studies conducted by Fallahi (2017), Kasbar (2017), Moudgil (2014), and Poirier et al. (2016).

Figure 3.10. Envelope panel installation

Figure 3.11. Envelope panel installation II (UBC CIRS, 2017)

Chapter 4: Quality Assurance and Quality Control of the Building Structure

This chapter describes some of the main quality assurance (QA) and quality control (QC) practices that were implemented during the design, manufacture, and construction of the structure. Special attention was given to the QA/QC practices more closely related to the mass timber elements since the construction of the concrete elements followed common practices. The main parties involved in the design, manufacture, and installation of the structure are presented in Table 4.1.

Table 4.1. Main parties involved in QA/QC of the structure

Role	Description
Structural Engineer	Designed the structure and specified requirements for the manufacture and erection of the structural element. Carried field reviews, assuring that reinforced concrete and mass timber elements complied with the project specifications and the construction drawings. Responsible for authorizing modifications to the mass timber elements.
Reinforcing Steel Contractor	Responsible for supplying and installing concrete reinforcement. Work reviewed by the Structural Engineer.
Concrete Contractor	Responsible for pouring the concrete elements onsite. Work reviewed by the Structural Engineer.
Mass Timber Manufacturer	Manufacturer of the mass timber elements. Responsible for keeping QA/QC logs.
Mass Timber Installer	Installer of the mass timber elements. Responsible for keeping QA/QC logs.
Construction Manager	Oversaw and coordinated the construction process. Implemented a weather protection plan and a strategy to continuously monitor the height of the structure and the compression of columns.
Envelope Consultant	Oversaw the effectiveness of the weather protection plan.

The QA/QC practices were identified by reviewing the project specification and other project documents, and by interviewing members of the project team. The identified practices were classified in three categories:

- Performance related: practices meant to guarantee and check an adequate performance of the timber elements and the structure.

- Constructability related: practices meant to guarantee and check a construction process free from issues (e.g. delays, overruns, errors).
- Durability related: practices meant to guarantee and check and adequate durability of the timber elements and the structure.

These QA/QC practices are presented in this chapter, following the structure presented in Figure 4.1. As it can be seen, this chapter first describes the most general practices that were applied to the whole structure or to more than one type of structural element. After this, the more element-specific practices are described.

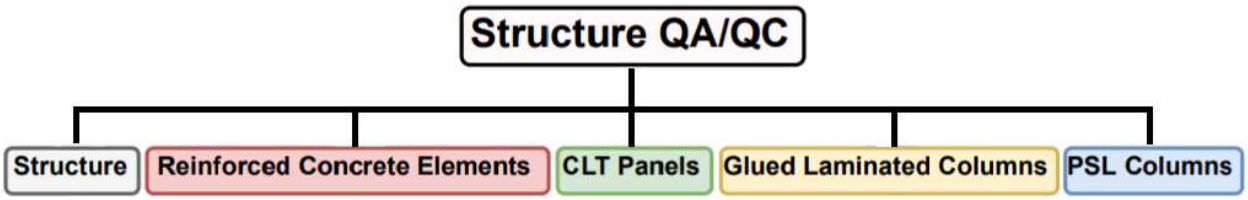

Figure 4.1. Classification of structure QA/QC processes

4.1 Structure

The QA/QC process related to the structure are presented in this section and have been classified as presented in Figure 4.2.

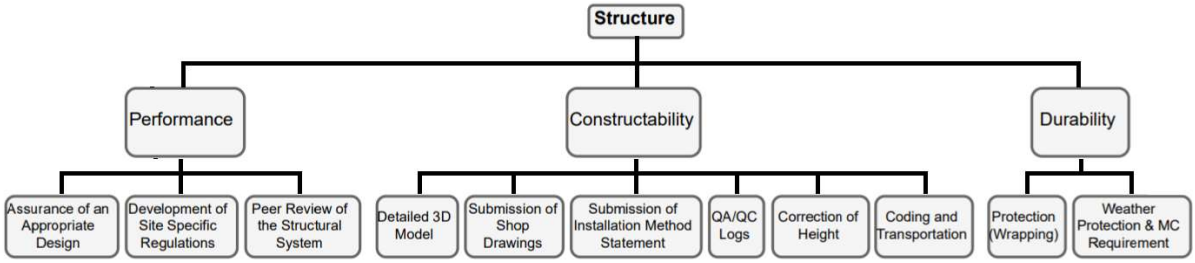

Figure 4.2. Classification of structure specific QA/QC processes

4.1.1 Performance

4.1.1.1 Assurance of an Appropriate Design

The TWH was the tallest wood building in the world at the time of its completion. The British Columbia Building Code (BCBC) does not allow a building of such height to be made of combustible construction and limits mass timber construction to two storeys (Office of Housing and Construction Standards, 2012). Therefore, the structure of the TWH is rather unique in the Vancouver area and in Canada, which demanded a special level of care during the structural design of the building. Two main practices that helped to guarantee an appropriate design were:

- The development of a Site Specific Regulation (SSR), involving experts in different areas.
- A peer review of the structural system.

4.1.1.1.1 Development of a Site Specific Regulation

According to the British Columbia Building Act Guide, a SSR is a document that specifies which requirements of the BCBC will not apply to a specific project and replaces them with substitute requirements (Office of Housing and Construction Standards, 2015). This route has been designed to allow the construction of innovative buildings, and the use of materials and construction methods that do not meet the requirements of the BCBC. However, an SSR is not meant to allow compromises in matters of safety and performance. Therefore, developing an SSR is a delicate procedure that requires care to assure that the final building will be as safe as one that follows the original requirements of the BCBC (Office of Housing and Construction Standards, 2015).

In the case of the TWH, a SSR was required to allow the construction of a hybrid mass timber building that exceeded the originally allowed height of just two storeys. The development of the SSR included reviews done by panels of experts (Fallahi et al., 2016). According to Fallahi et al. (2016), the structural review panel was formed by individuals from the following organizations:

- UBC Faculty of Forestry
- Gage-Babcock & Associates Ltd.
- Forest Innovation Investments
- StructureCraft Builders
- Read Jones Christoffersen consulting engineers
- Structural Engineers Association of British Columbia
- City of Vancouver
- McFarlane Biggar Architects + Designers inc.
- FP Innovations
- Equilibrium Consulting
- Wood Science and Technology Centre
- Representatives from British Columbia's Building Safety and Standards Branch
- National Research Council of Canada

Additionally, a fire safety review panel was also formed, integrating individuals from the following organizations:

- Gage-Babcock & Associates Ltd.
- Building Code Appeal Board

- Sereca Fire
- City of Vancouver Fire Department
- City of Surrey Fire Department
- City of Vancouver Engineering department
- National Research Council of Canada
- Representatives from British Columbia's Building Safety and Standards Branch
- Forest Innovation Investments

These panels focused on identifying all areas of uncertainty surrounding the performance of the building and assuring that all of them were adequately addressed by the SSR. Besides this, review sessions were carried out, giving the design team the opportunity to directly interact with the panels of experts and get their feedback on different items. According to Fallahi et al. (2016), structural-related items included:

- Type of glue to be used in the manufacturing of CLT.
- Charring of mass timber elements in the building in case of fire.
- Design of structural connections.
- Differential settlement and its impact on the building.
- Behavior of building in case of progressive failure.
- Obtaining consensus on design loads, including rolling shear and other loads.
- Risk of wood getting wet during construction and operations.
- Using the latest seismic codes (National Building Code of Canada 2015) and any difficulties in implementing them.

Similarly, fire safety-related items included:

- Presenting a conservative approach to fire protection to facilitate approval; for instance, there is no reliance on charring for fire resistance of structural elements.
- Providing different material options such as increasing quantity of mineral wool in the assembly or using Magnesium Oxide boards, which would require additional fire testing.
- Discussion of past events of fire during construction of a tall wood building in the UK.
- Questions around the contribution of mass timber to fire spread once all fire protection has disappeared.
- Encapsulation of structural connections, noting that no steel will be left apparent.
- Accounting for earthquake events and providing life safety measures for extreme cases.

4.1.1.1.2 Peer Review of the Structural System

According to Fallahi et al. (2016), the structural system was reviewed by two structural engineering firms:

- Read Jones Christoffersen consulting engineers (RJC), with expertise in local building codes.
- Merz Kley Partner AG (MKP), with expertise in tall wood construction.

The review carried by RJC was done at a preliminary stage of the design, before the development of the SSR. The review helped to identify the elements that were not covered under the original BCBC and that, therefore, required an “Alternative Solution” approach. RJC also checked the sizing of the gravity and lateral structural elements. This review found that, in general, members appeared to have appropriate dimensions. Whenever elements appeared to be

under designed, RJC reported them to the Structural Engineer. Examples of this included the corridor columns supporting higher loads and CLT panels that were observed to bear high shear and bending stresses.

The review carried by MKP focused on the structural capacity of the mass timber elements. Different load assumptions were provided by the Structural Engineer and used to establish critical conditions that would impose the highest structural demands on the mass timber elements. This review carried out by MKP focused on gravity loads and excluded the effects of lateral ones. Under all the identified critical conditions, the mass timber elements were observed to be within their structural capacity.

4.1.2 Constructability

4.1.2.1 Detailed 3D Model

One key tool used to guarantee the conception of a highly constructible design was the development of a detailed 3D model. The Virtual Design and Construction (VDC) Modeler was in charge of managing the model and communicating issues to the project team.

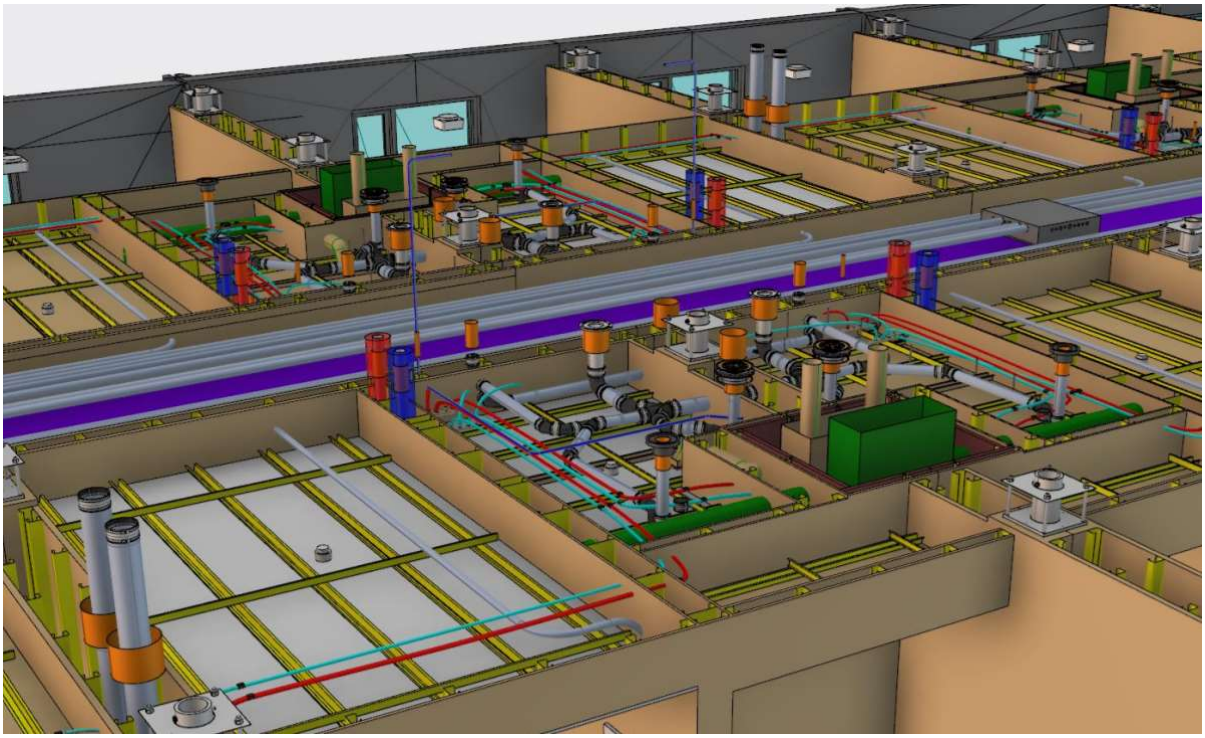

Figure 4.3. 3D model sample view (credit CadMakers)

As shown in Figure 4.3, the model included the structure and all utilities. This allowed the CLT panels to be prefabricated with all openings for utilities. Figure 4.4 illustrates some of the constructability issues that were identified in the model and the solutions that were proposed by the modeler. These issues included:

- hard clashes (when two or more objects occupy the same physical space),
- soft clashes (when one or more objects occupy a physical space that is required to be kept clear; for example, due to safety or code requirements), and
- placing an object in a location that results in unpractical working conditions.

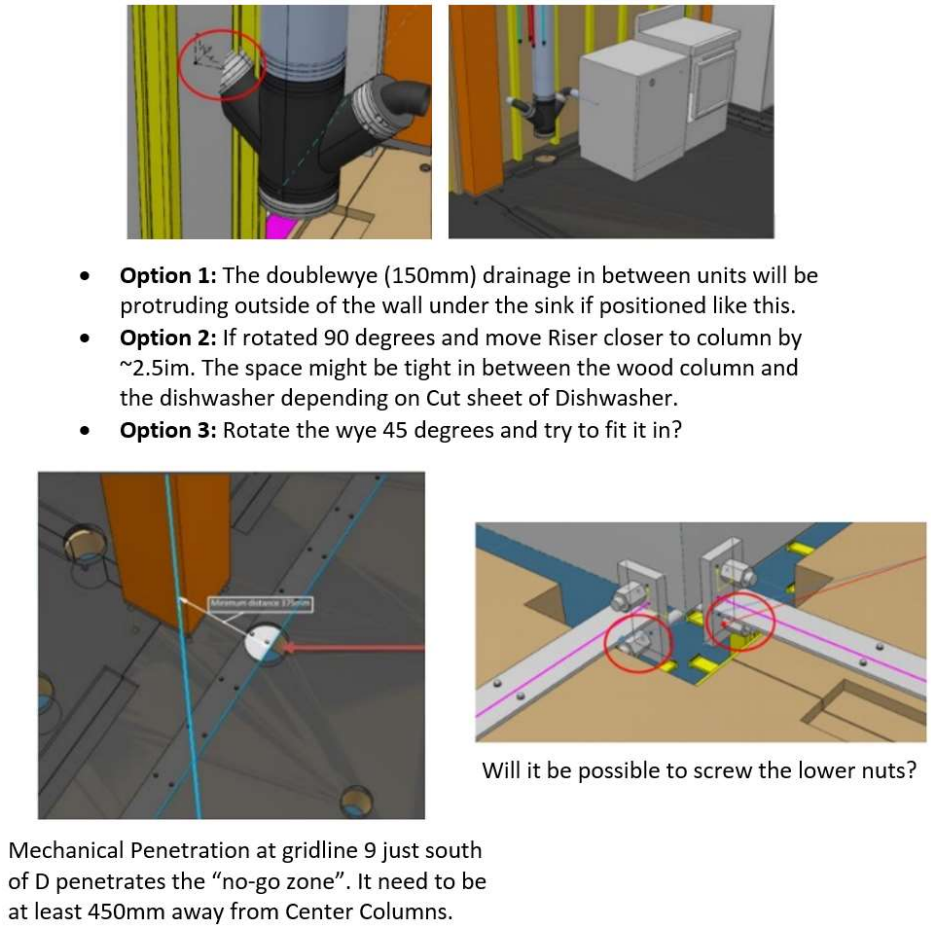

Figure 4.4. 3D model clash and detection of constructability problems (credit of CadMakers)

The 3D model was a key element of the integrated design process that was followed, allowing all parties to visualize the discussed and proposed designs and solutions. As the client, UBC saw the whole design process and the implementation of the 3D model as a highly positive experience. UBC is already employing this type of models for clash detection in other projects.

4.1.2.2 Submission of Shop Drawings

As a quality control measure, the project specifications required the Mass Timber Manufacturer to submit shop drawings of all the timber elements (project specifications, sections 06 15 23; 06

18 19; 06 18 20). These drawings were reviewed by the Architect, Structural Engineer, and VDC Modeler. The shop drawings were required to show:

- The location of each element, using its unique code to identify it.
- A layout, elevation, and dimension of each panel and each column.
- Details, cuts, openings, holes, and connections.

These shop drawings were delivered and reviewed as per the specifications. The following figures provide examples of the type of comments that were provided in the review and show the final state of the shop drawings.

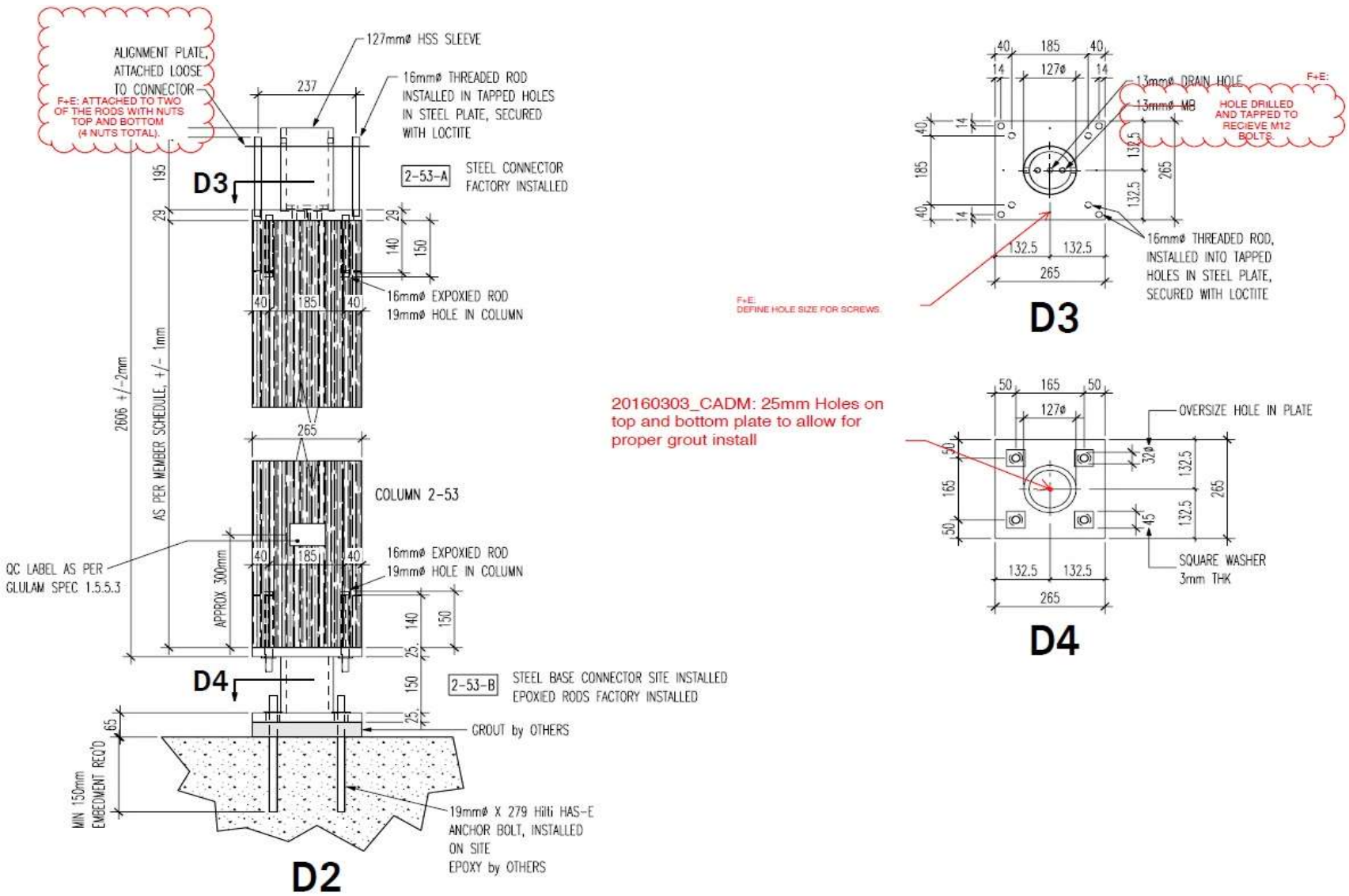

Figure 4.5. Column connection details - review (courtesy of Urban One Builders)

As it can be seen in Figure 4.5, the VDC Modeler had an active participation in these reviews, ensuring that the shop drawings had all the required information. In this case, the absences of holes to allow the installation of grout were noted and added to the final version of the shop drawings (see Figure 4.6). Further studying the various roles of the VDC Modeler and the flow of information between the 3D model and shop drawings constitutes an opportunity for a future study. The Structural Engineer also made several observations requesting information to be added and inaccurate annotations to be corrected.

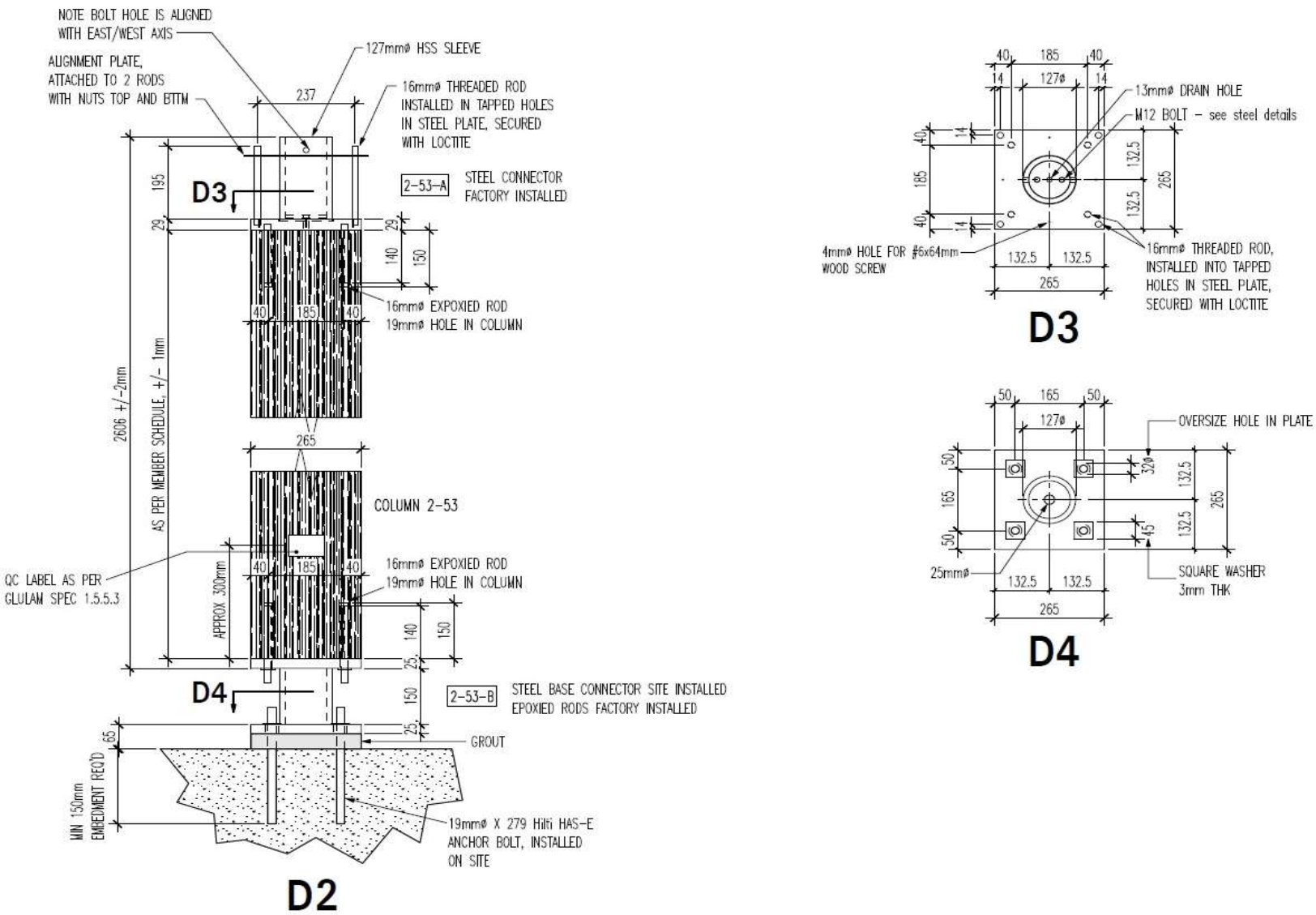

Figure 4.6. Column connection details - final version (courtesy of Urban One Builders)

Figure 4.7 shows the comments made on a different detail of the same package of shop drawings. The Structural Engineer took special care to clarify that CLT panels were not to be cut or trimmed onsite. The final version of this drawing, that includes the observations made during the revision, is presented in Figure 4.8.

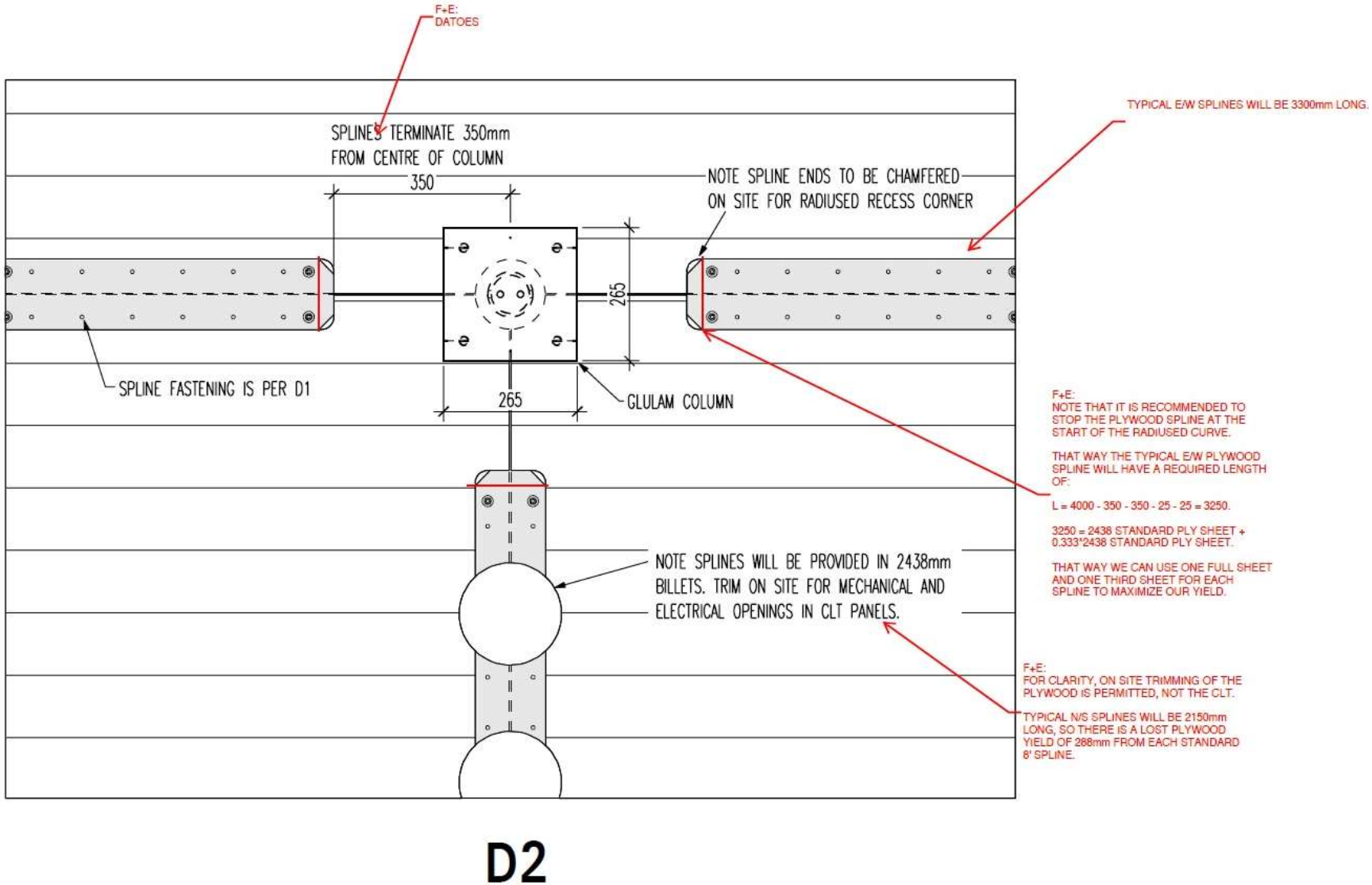

Figure 4.7. CLT panels and plywood spline details - review (courtesy of Urban One Builders)

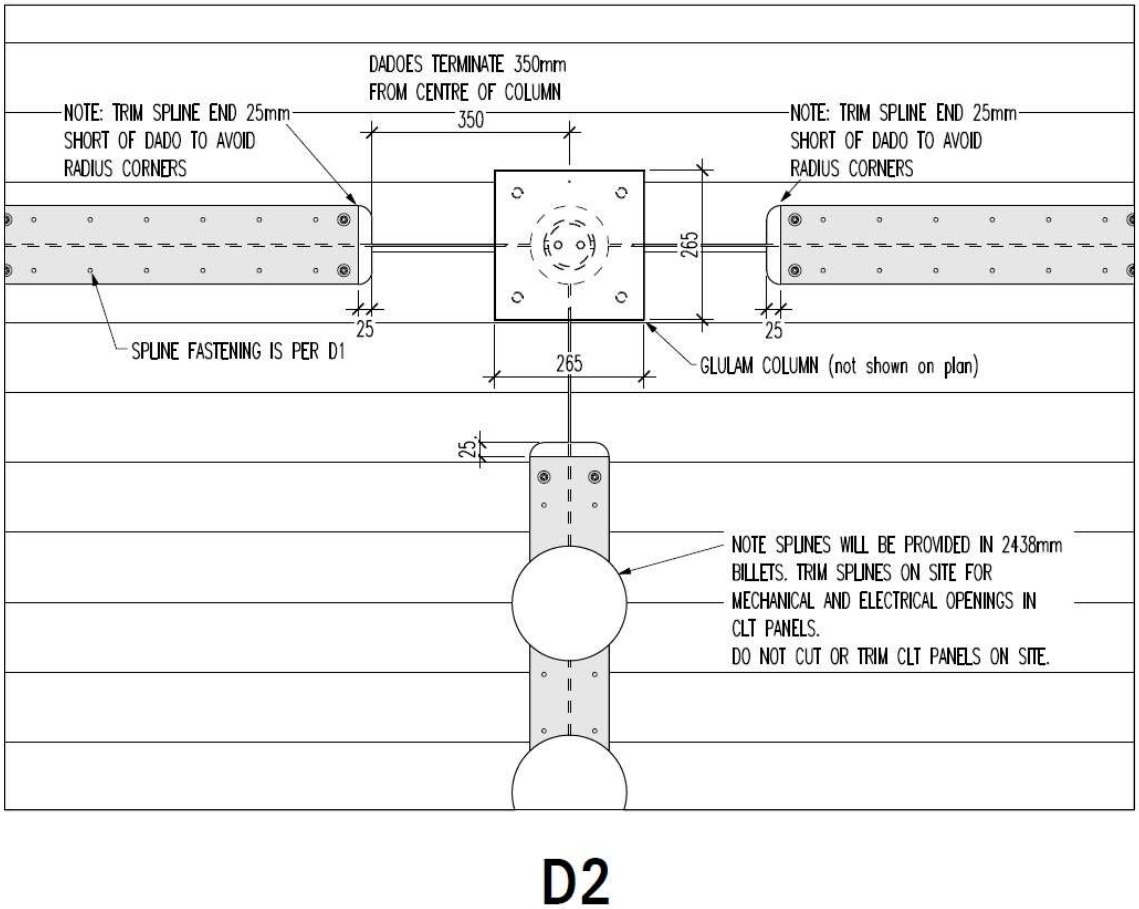

Figure 4.8. CLT panels and plywood spline details – final version (courtesy of Urban One Builders)

4.1.2.3 Submission of an Installation Method Statement

To assure that the installation method complies with the project specifications, the Mass Timber Installer was required to submit an installation method statement to be reviewed by the Structural Engineer. The document was required to include temporary loading conditions and bracing of the structure during installation (Project specifications, sections 06 15 23; 06 18 19; 06 18 20). According to the Mass Timber Installer, requiring such method statements is common in mass timber projects.

Figure 4.9 shows the reviewed method statement and examples of the comments and observations that were made by the Structural Engineer. These comments include:

- Clarifying that any modification to the timber elements, such as cuts or reaming holes, was not permitted without written approval of the Structural Engineer.
- Recommending to develop a plan indicating which CLT panels need to be stitched off with plywood splines before landing the next set of panels in order to guarantee a stable deck during installation.
- Indicating that the Mass Timber Installer was required to keep QA/QC logs in accordance with the specifications.
- Requiring a more detailed description of the surveying and shimming process to be followed during installation.

F+E:
FIELD MODIFICATIONS TO CLT PANELS IS NOT PERMITTED WITHOUT WRITTEN APPROVAL FROM FAST+EPP

Quality Control

CLT Panels

- Placement of panels is EXTREMLY critical with only 3mm theoretical gaps between panels in both length and width
- Any slight deviation in length or width of panels , out of squareness, swelling or creeping will mean that the panels will not fit without cutting or reaming of the holes
- We will need to be extremely accurate in the plumbing, lining, griding and squaring of the tops of the columns prior to landing the panels
- We should be prepared to cut or ream panels in order to fit
- Provide written documentation that work has been completed per specifications

F+E:
THIS WRITTEN DOCUMENTATION TO BE IN THE FORM OF THE QA/QC LOGS OUTLINED IN SPECIFICATION SECTION 06 15 23 CL1 6.6 AND 06 18 19 CL1 6.5

F+E:
A MORE DETAILED DESCRIPTION OF THIS LINE ITEM IS REQUIRED, SIMILAR TO THE "PROPOSED STRAGETY" OUTLINED ON S700

(I.E. WHICH LEVELS/HOW OFTEN YOU WILL ACCURATELY SURVEY THE TOP OF COLUMN ELEV, AND WHICH LEVELS WILL RECIEVE THE SHIM PACKS TO THE HIGHER DATUM

Execution

Columns

- When required and as required per structural specifications install steel shims provided by SLP to tops of column tubes to achieve required datum. Survey by others
- Install columns – smaller upper column tubes into larger lower column tubes - using tilting mechanism
- Sequence of installation is from SE corner and up and across working from right to left (East to West)
- Bundle make up and locations is as per proposed column installation sequence plan (attached)
- Install diagonal braces and spreaders per engineer approved bracing plan (See proposed bracing plan attached)
- Plumb and line glulam columns using offset gridlines, vertical line laser and line laser making adjustments as may be necessary to bring back to grid
- Install bolt and cotter pin to bottom tube connection

Figure 4.9. Extracts from the revised installation method statement (courtesy of Urban One Builders)

This requirement proved to be an effective way of assuring compliance with the specifications during installation and a mutual understanding between the Mass Timber Installer and the Structural Engineer on how to perform the work.

4.1.2.4 QA/QC Logs

With the goal of tracking and documenting the conditions of the timber elements during manufacture, transportation, storage and installation, the specifications (project specifications, sections 06 15 23; 06 18 19; 06 18 20) required QA/QC logs to be kept by the Mass Timber

Manufacturer and the Mass Timber Installer. The format of these documents had to be submitted to the Structural Engineer for revision and approval before use. For CLT panels and columns, the information that was documented in the logs was similar and included:

- A record of environmental conditions at all stages, including fabrication, transportation, storage, and erection.
- A record of the actual dimensions of the timber element, indicating compliance with the dimension tolerances.
- A record of elements delivered to the construction site and received by the Mass Timber Installer, indicating any damaged or missing materials at the time of arrival.
- Equipment used for installation, such as torque drills for screw installation.
- Log of any changes or modifications made to the timber elements.
- A confirmation of compliance with erection tolerances.
- Representative pictures.

According to the Mass Timber Installer, keeping these logs is a common practice and was not a challenging requirement to meet. According to the Mass Timber Installer, the logs were useful to communicate and track the results of the installation process and the performance of its tradespeople. The logs were kept and submitted to the Construction Manager. The approved format of the QA/QC logs is shown on Figure 4.10 and Figure 4.11.

	Date arrived on site	Verified Manifest	Install Date	Weather	Equipment Used	Changes/modifications	Photos	Comments
Truck #1								
Truck #2								
Truck #3								

CLT Placement and Sequence

<table>
<tr><td colspan="2">CLT-1
#23</td><td colspan="2">CLT-2
#24</td><td colspan="2">CLT-3
#25</td><td colspan="2">CLT-4
#26</td><td colspan="2">CLT-5
#27</td><td colspan="2">CLT-6
#28</td><td colspan="2">CLT-7
#29</td></tr>
<tr><td colspan="3">CLT-8
#17</td><td colspan="2">CLT-9
#18</td><td colspan="2">CLT-10
#19</td><td colspan="2">CLT-11
#20</td><td colspan="2">CLT-12
#21</td><td colspan="3">CLT-13
#22</td></tr>
<tr><td colspan="2">CLT-14
#7</td><td colspan="2">CLT-15
#6</td><td colspan="2">CLT-16
#5</td><td colspan="2">CLT-17
#4</td><td colspan="2">CLT-18
#3</td><td colspan="2">CLT-19
#1</td><td colspan="2">CLT-20
#2</td></tr>
<tr><td colspan="3">CLT-21
#13</td><td rowspan="2">CORE 1</td><td colspan="3">CLT-22
#9</td><td colspan="3">CLT-23
#8</td><td rowspan="2">CORE 2</td><td colspan="3">CLT-24
#15</td></tr>
<tr><td colspan="3">CLT-25
#14</td><td colspan="2">CLT-26
#12</td><td colspan="2">CLT-27
#11</td><td colspan="2">CLT-28
#10</td><td colspan="3">CLT-29
#16</td></tr>
</table>

Indicate on drawing any deviation from tolerances

G. Position of CLT panels are within erection tolerances, 2mm (+/- 2mm), max 4mm gaps between panels ☐ yes ☐ no

H. CLT panels have not been trimmed, cut, reamed to fit ☐ yes ☐ no

I. Elevation of CLT panels are within erection tolerances, +/- 2mm from theoretical datum ☐ yes ☐ no

J. Plate washers are secured over column tops onto CLT ☐ yes ☐ no

K. Protection of CLT is completed per Urban One Builders direction ☐ yes ☐ no

L. CLT Splines are fastened as per structural plans ☐ yes ☐ no

M. CLT panels are fastened to L angles at core per structural plans ☐ yes ☐ no

Figure 4.10. QA/QC log documenting the installation of CLT panels (courtesy of Seagate Structures Ltd.)

	Date arrived on site	Verified Manifest	Install Date	Weather	Equipment Used	Changes/modifications	Photos	Comments
Glulam columns								
PSL columns								

Column Placement and Bracing Sequence - L2 to L4

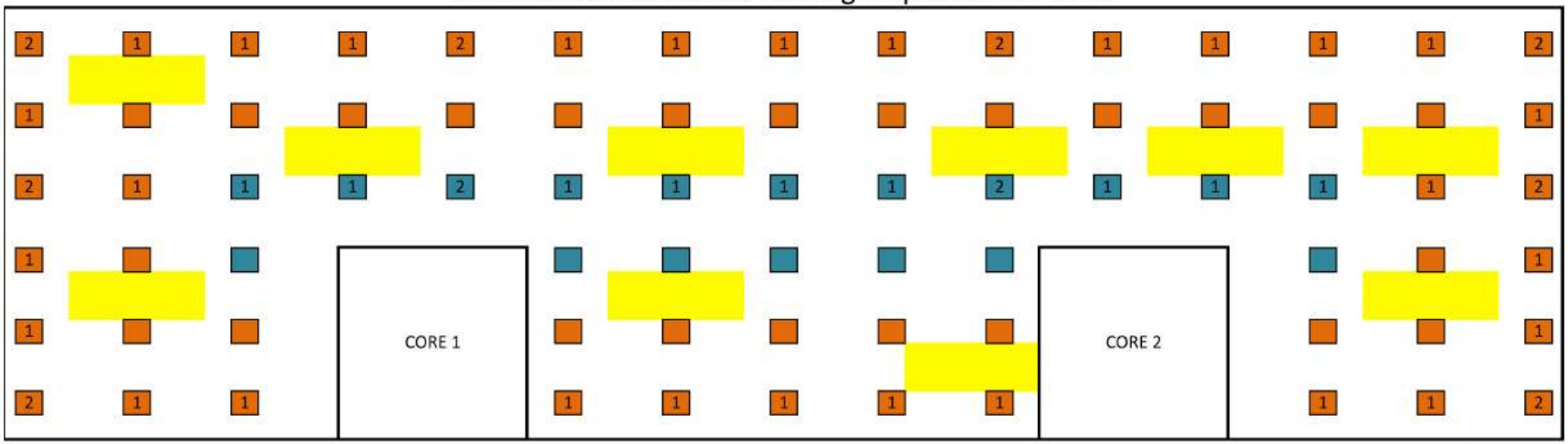

Indicate on drawing any deviation from tolerances

Numbers indicate how many braces are required

Column packs can be placed in these zones on 5' long - 6x6 dunnage

A. Position of base of columns are within erection tolernaces, +/- 2mm in both directions from theoretical ☐ yes ☐ no

B. Elevation of base of columns are within erection tolerances, +/- 2mm from theoretical datum ☐ yes ☐ no

C. Plumbness of columns are within erection tolerances, 2% OR 6mm maximum deviation from plumb ☐ yes ☐ no

D. Columns are temporarily braced inaccordance with engineered bracing plan. ☐ yes ☐ no
Bracing is NOT to be removed until drag straps and splines have been installed and fully fastened

E. 1/2" diameter bolt, complete with cotter pin, is in place at column to column connection ☐ yes ☐ no

F. Protection of columns is completed per Urban One Builders direction ☐ yes ☐ no

Figure 4.11. QA/QC log documenting the installation of columns (courtesy of Seagate Structures Ltd.)

For the Mass Timber Manufacturer, keeping QA/QC logs is also a common practice and part of their internal quality control process. The Mass Timber Manufacturer kept QA/QC logs for each timber element, as presented in Figure 4.12 and Figure 4.13. These logs were fed into the quality control spreadsheets presented in Figure 4.26, Figure 4.31, and Figure 4.33.

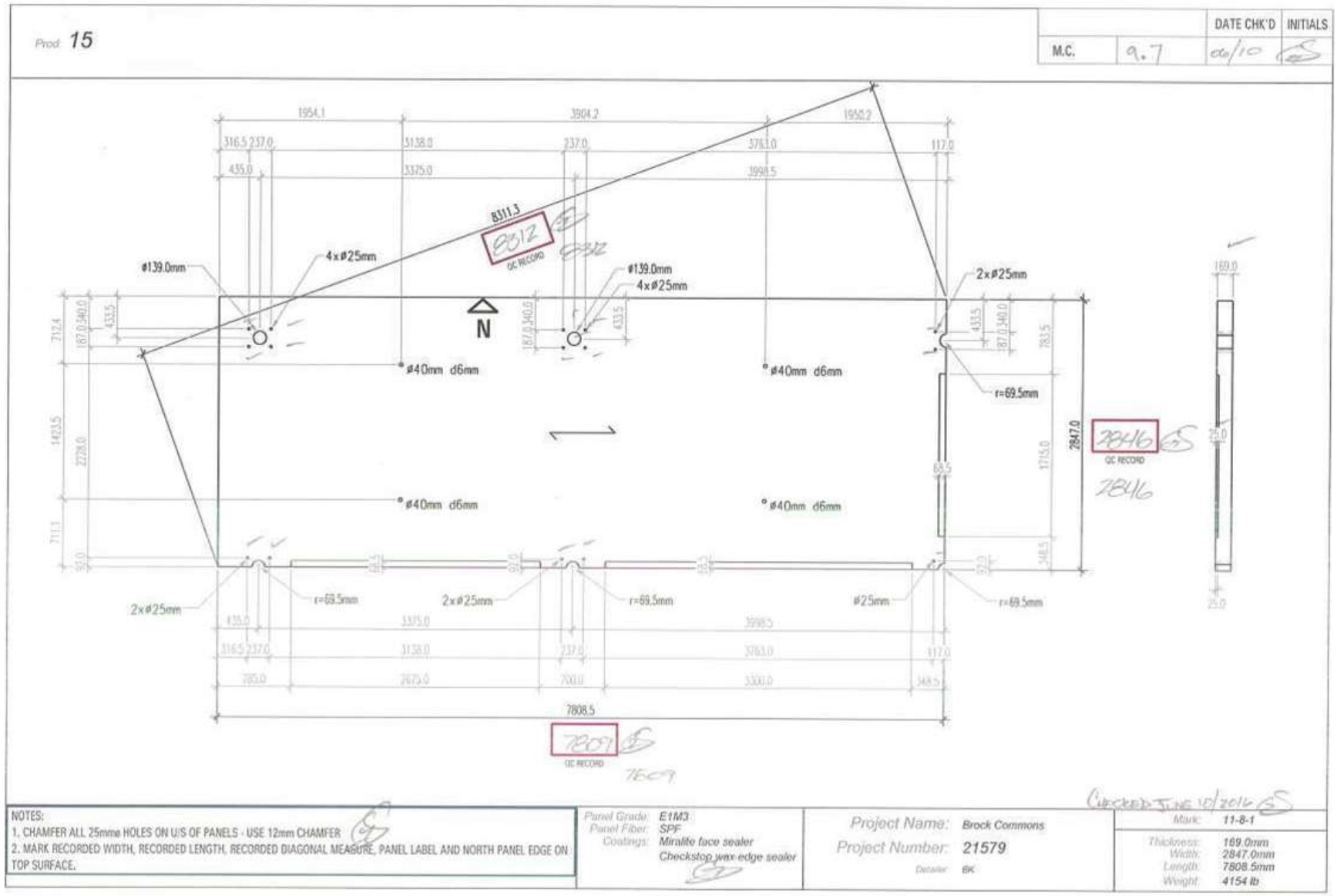

Figure 4.12. QA/QC log documenting the production results of CLT panels (courtesy of Structurlam Mass Timber Corporation)

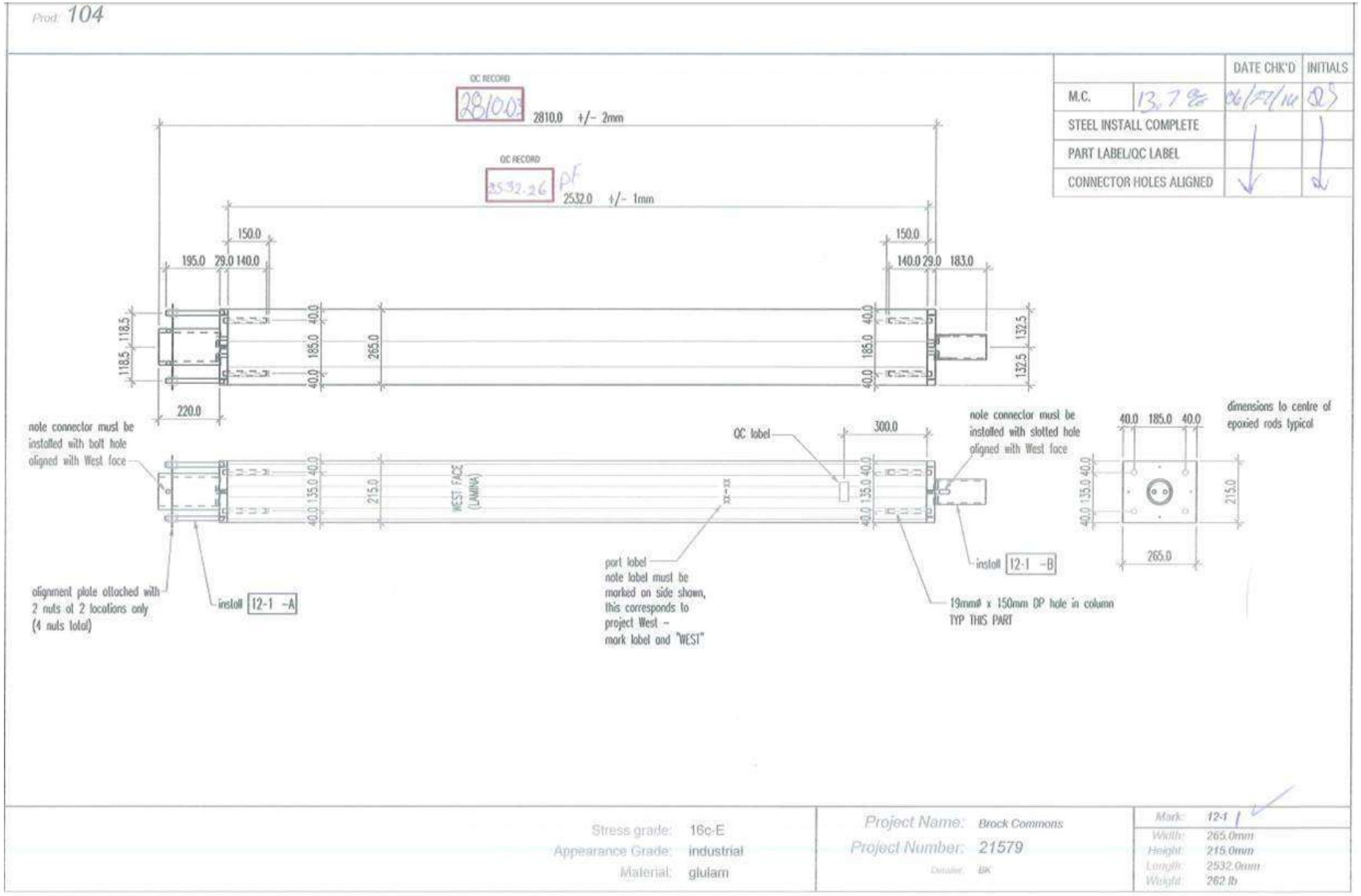

Figure 4.13. QA/QC log documenting the production results of columns (courtesy of Structurlam Mass Timber Corporation)

For the CLT panels, the QA/QC logs recorded the measured dimensions of the element, including its thickness, width, and length. The logs also indicate the unique identification code of the panel, and its weight. For columns, the logs recorded the width, height, and length. The logs also recorded the unique identification code of the column and its weight. All this information was submitted to the Construction Manager, serving as a record of compliance with the project specifications.

4.1.2.5 Correction of Height

The Structural Engineer developed a process to track and correct the height of the structure to a theoretical datum. Some of the goals of this process were to:

- Assure a proper fit of all prefabricated elements
- Avoid propagation of errors
- Avoid cuts to columns
- Avoid cuts to the hollow steel structure (HSS) connections
- Avoiding deflections and unintended stresses in the CLT panels

The process consisted on surveying the height of the structured at levels 2, 3, 9, 12 and 16 after finishing the installation of the upper level panels. Then, the height of the structure was corrected to match the theoretical datum. Matching the height of the structure with the theoretical datum was important because prefabricated elements were used and because the concrete cores had embedded steel angles to support the CLT panels (Figure 4.14).

Figure 4.14. Embedded steel angles in concrete cores

These angles served to support the CLT panels, as seen in Figure 4.15 and Figure 4.16. Discrepancies between the height of the structure and the theoretical datum would have required to slope the CLT panels in order to meet the height of the steel angles and the mass timber columns.

Figure 4.15. CLT to concrete core connection image

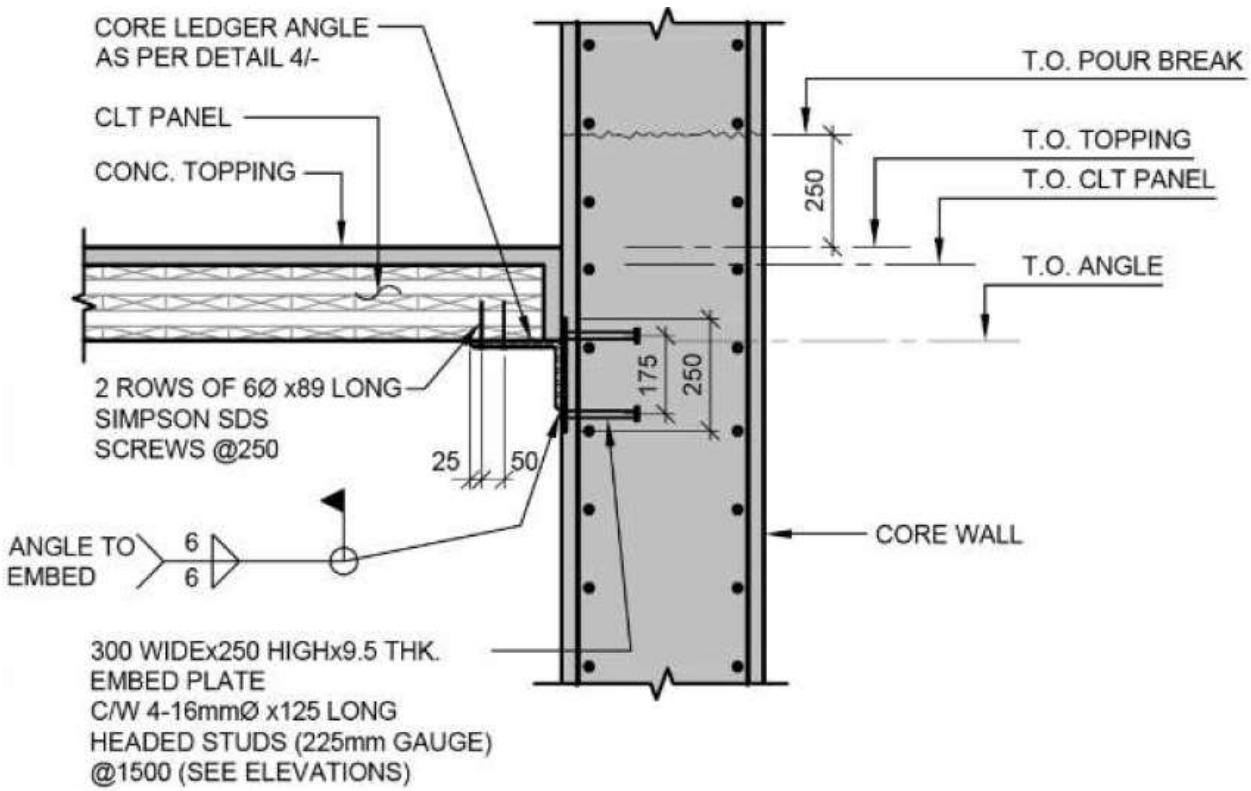

Figure 4.16. CLT to concrete core connection detail (courtesy of Urban One Builders)

Having this in mind, the Construction Manager decided to modify the proposed sequencing strategy. The intention was to make a more complete and continuous assessment of the state of the structure and avoid preventable issues. The following modification were made:

- Survey the height of the structure after the completion of each level, and not only at levels 2, 3, 9, 12 and 16.
- Besides recording the total height of the structure, record the total height of each column. This was done to assess the progressive compression of the columns, since each new level increased the total gravity load of the structure.

Shimming was the main process to correct the height of the structure. This process was conceived during the design phase. As per this process, steel plates of 1.58 mm of thickness (shims) were to be placed in the column-to-column connections, effectively increasing the height of the structure (see Figure 4.17 and Figure 4.18). A process to decrease the height of the structure to match the theoretical datum was not conceived during design.

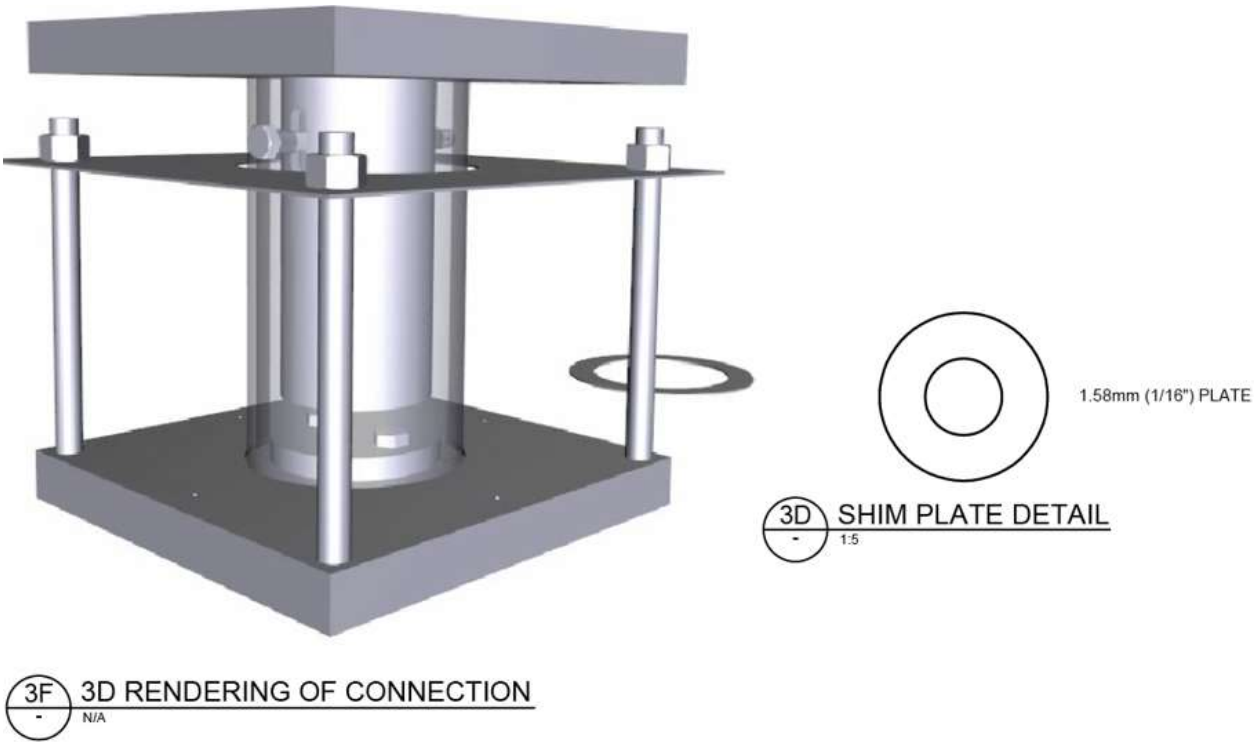

Figure 4.17. Connection and shim rendering (courtesy of Urban One Builders)

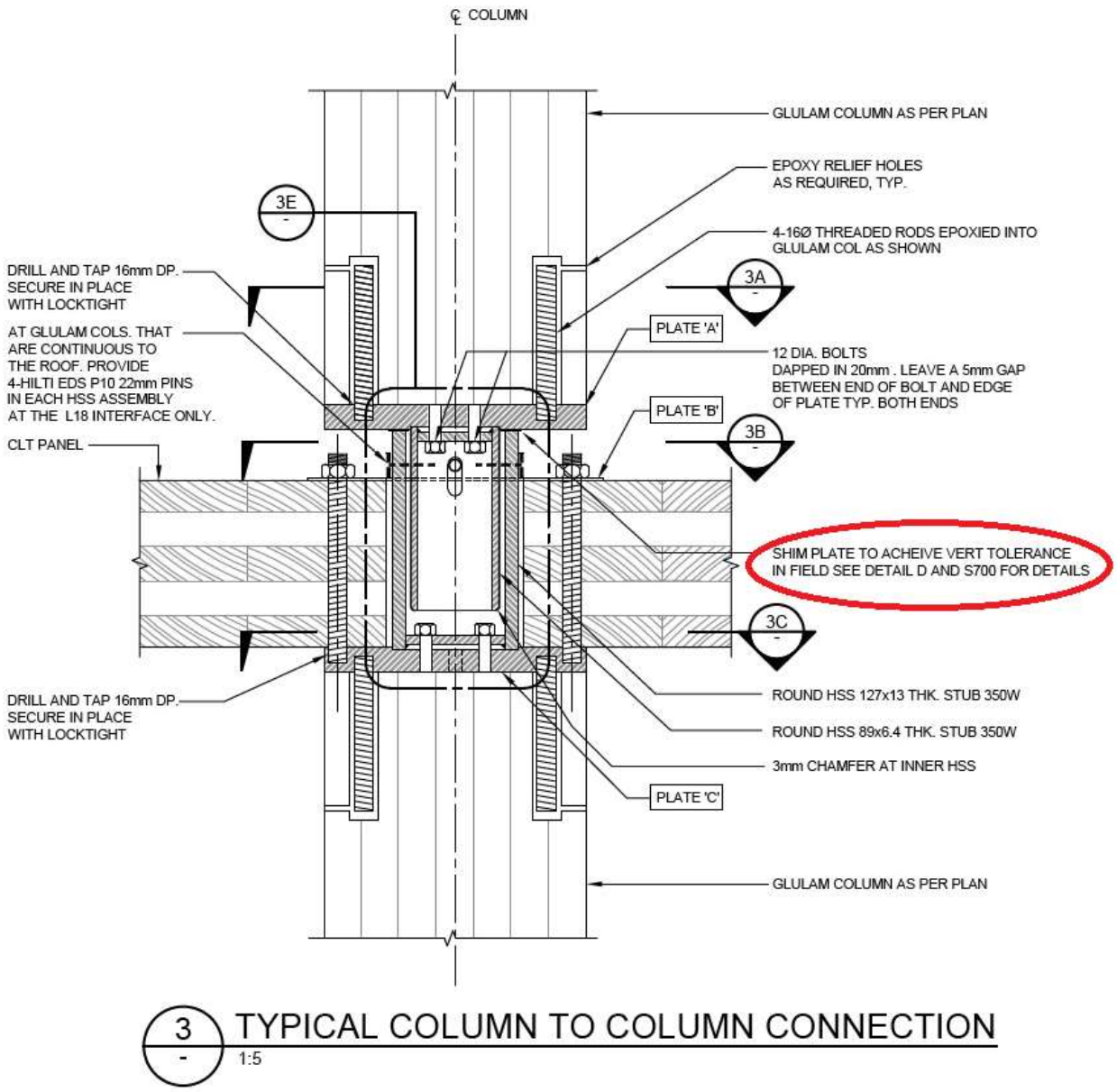

Figure 4.18. Connection and shim details (courtesy of Urban One Builders)

Shimming was routinely used to correct the height of the structure, proving to be efficient and effective. However, since the stiffness of the columns was higher than originally expected, the compression of columns was lower than the design estimates. A survey of level 9 indicated that the structure was higher than the theoretical datum. Therefore, a site instruction was emitted,

requiring the connections of all columns of level 11 to be cut 10mm. This correction had the following steps:

- Columns of the 11th floor were installed as usual
- After installation, the top HSS stubs were removed and transported offsite
- The connections were cut 10mm by the manufacturer in the factory
- Connections were transported back to the construction site and installed on the columns

Modifications or cuts to the bottom connection of the columns of level 12 were not required. The timber columns were not required to be cut or trimmed either. Besides this one-time correction, the erection of the structure did not require any other practice to be implemented, besides shimming, to match the theoretical datum. The capacity of the designed connections to allow corrections to the height of the structure without disrupting the construction process proved to be an important advantage.

4.1.2.6 Coding and Transportation

To avoid misplacement of the timber elements during transportation and installation, two measures were put in place:

- a unique identification code was placed on each timber element
- the loading and unloading cycles were modeled

During designs, each CLT panel and each column was assigned a unique identification code. The Mass Timber Manufacturer was in charge of placing these codes in the final product (see Figure

4.19). Then, the codes were used by the Mass Timber Installer to identify the location of each element during the installation.

Figure 4.19. Coding of a timber column (courtesy of Structurlam Mass Timber Corporation)

According to the Mass Timber Installer, coding is a common industry practice in timber structures. However, in this project coding was of a significant importance for the CLT panels since they came with cuts for utilities. The Mass Timber Installer confirmed that all elements were correctly coded and no issues were observed during installation.

Loading and unloading cycles had to be coordinated between the Mass Timber Manufacturer, Mass Timber Installer, and the Construction Manager. The sequence was conceived by the Mass Timber Installer and included the position of each element on the truck during transportation and at the storage location after unloading. Figure 4.20 illustrates the planned transportation of CLT panels.

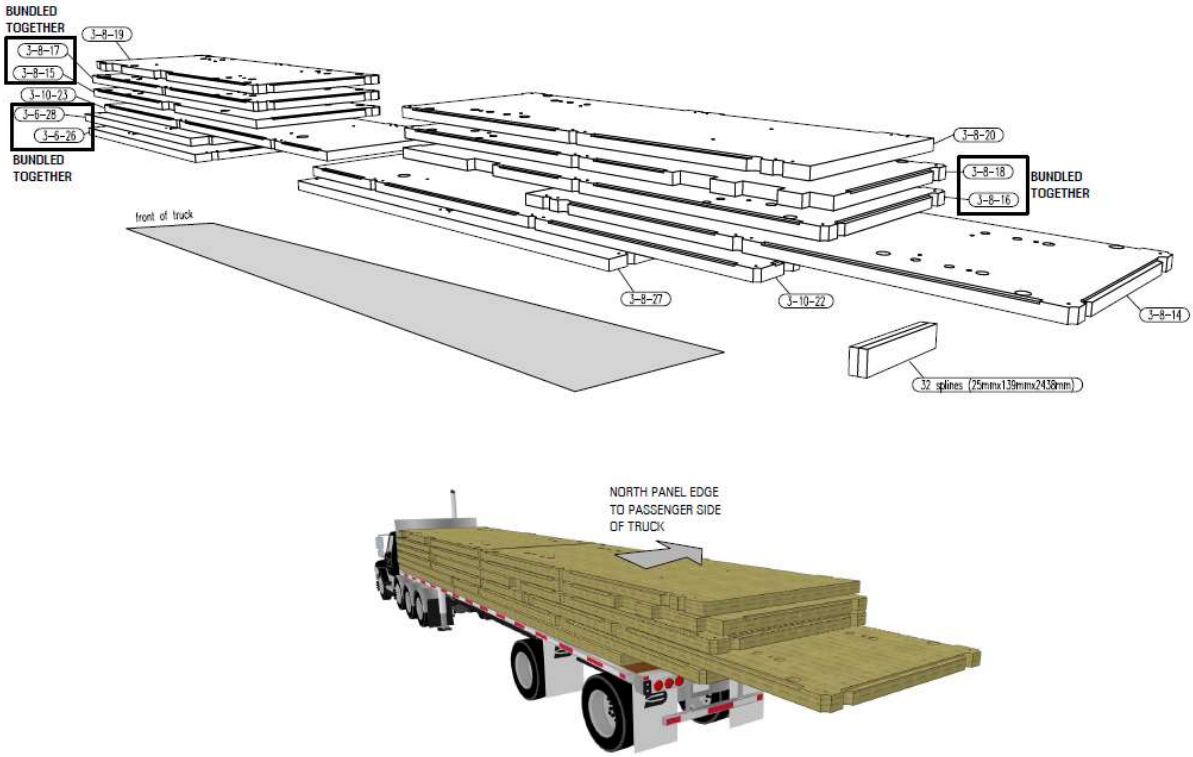

Figure 4.20. Model of a typical loading/unloading cycle (courtesy of Urban One Builders)

Although planning loading and unloading cycles to this level of detail is not a common industry practice and required additional work during the planning stages, the Mass Timber Installer considered this to be a successful practice that facilitated the installation process. The Mass Timber Installer, in charge of unloading the trucks, observed all trucks to be properly loaded as per the models.

4.1.3 Durability

4.1.3.1 Protection

To prevent damage to the timber elements, the specifications required the elements to be wrapped. Wraps were required to be kept in place until they no longer served a useful purpose (project specifications, sections 06 15 23; 06 18 19; 06 18 20). These wrappings (see Figure

4.21) were installed by the Mass Timber Manufacturer and were required to be slit in order to prevent the accumulation of moisture.

Figure 4.21. Wrapped CLT (courtesy of Structurlam Mass Timber Corporation)

The Mass Timber Manufacturer followed the specifications and the timber elements arrived to the construction site properly wrapped. Wrappings were removed just before installation for practical reasons. In the case of the CLT panels, wrappings were removed since the panels were quickly covered with a layer of concrete topping. In the case of the columns, wrappings were removed to have them ready for the installation of a first layer of gypsum that was required for fire protection. Both, concrete and gypsum layers, properly replaced the protective functions of the wraps.

4.1.3.2 Weather Protection and Moisture Content Requirement During Construction

Since a large number of timber elements were employed in the structure, one of the cornerstones of the construction process was to protect them from weather and moisture. This was important because excessive levels of moisture could activate growth and propagation of mold. Thus, the Construction Manager was required to coordinate a weather protection plan (project specifications, sections 06 15 23; 06 18 19; 06 18 20).

As a quality control measure, the Envelope Consultant monitored the efficacy and effectiveness of the weather protection plan. As part of this, they routinely monitored the moisture content of the timber elements and carried site inspections. The observations showed that water was able to migrate through the structure. As a result, after rain events, it was common to see ponding water at different levels, including the ones were the envelope had been already installed. As a response, the weather protection was constantly updated, including additional measures like temporarily waterproofing the openings between CLT panels and the top of the envelope panels. This was done by placing and securing a plastic sheet as shown in Figure 4.22. Despite this, issues related to the weather protection plan continued until the final enclosure of the building (envelop and roof) was finished.

Figure 4.22. Waterproofing openings between CLT and envelope panels

Observations made during construction showed that the timber elements had a good natural capacity to dry back to acceptable moisture levels, even after heavy rains and being exposed to ponding water. However, it was of particular importance to leave the timber elements uncovered until they reached a maxim moisture content of 15%. This was necessary because the natural capacity of timber elements to dissipate moisture can be negatively impacted by covering them with layers of gypsum or concrete.

After the roof and the envelope were installed, water penetrations got limited to small infiltrations through the envelope. As a result of water infiltrations, considerable quantities of gypsum had to be replaced. However, the inspections never indicated damages to the timber elements. Although the plan failed at moments during construction, pushing for a fast completion of the structure helped to enclose the building and stop rain and weather from being an issue.

The CLT panels showed fast drying cycles due to their high area, allowing a dissipation of moisture along the whole body. Plywood splines, however, had a much lower area. Conditions worsened since part of the plywood area was in close contact with the CLT panels, diminishing its capacity to liberate moisture. As a result, these elements were constantly found to have particularly high moisture contents, surpassing 30% and 40%. For future projects, it is advisable to take this matter into account and consider replacing plywood splines with a moisture resistant material.

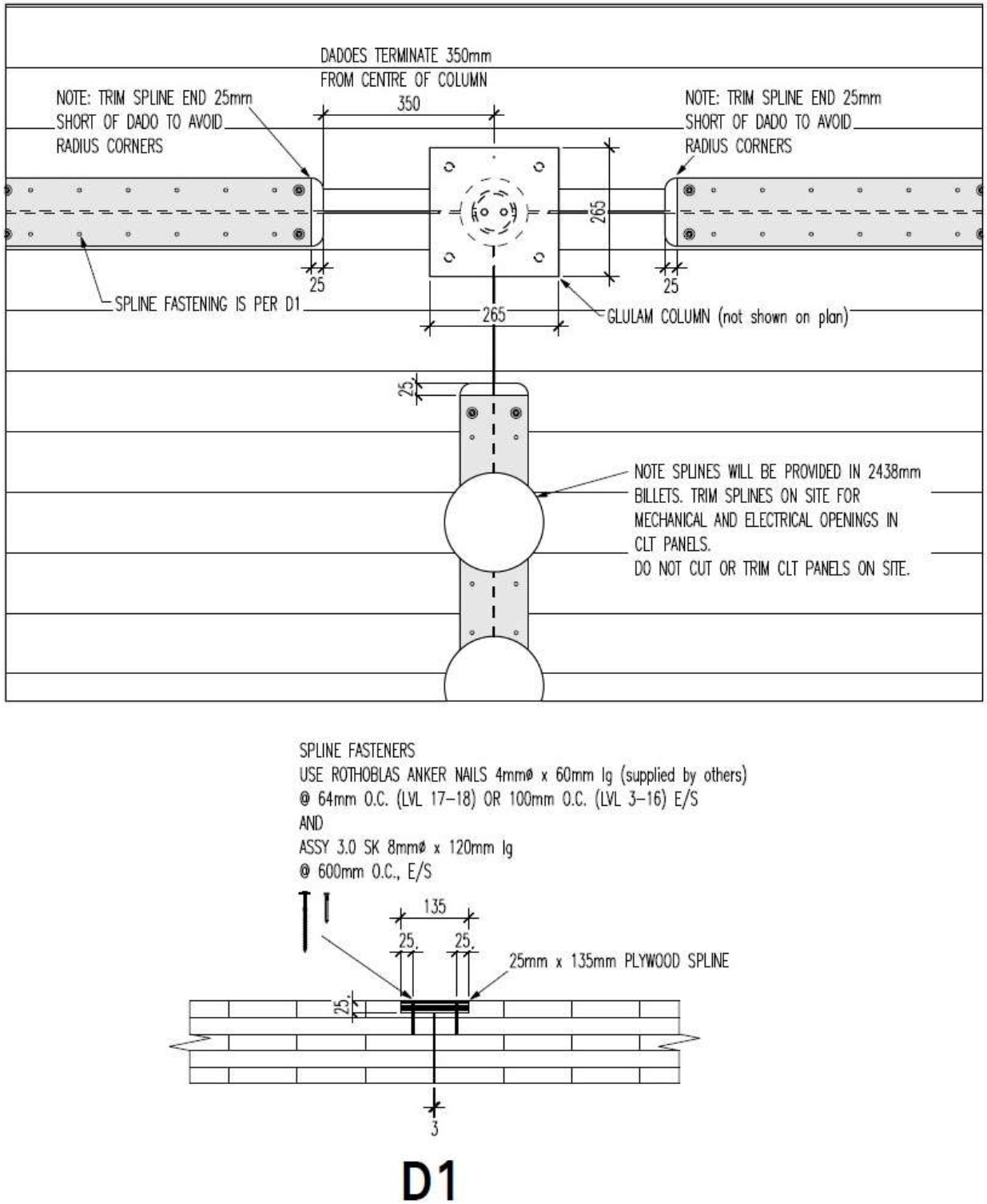

Figure 4.23. Plywood spline details (courtesy of Urban One Builders)

4.2 Reinforced Concrete Elements

The QA/QC practices related to the reinforced concrete elements have been reviewed at a more superficial level than the ones related to the mass timber elements. Mainly, this was done because the practices followed to manufacture and erect these elements were typical and the same that are followed in the construction of common concrete buildings.

4.2.1 Concrete Reinforcing Requirements and Specifications

The project specifications (project specifications, section 03 20 00) clearly detailed the practices that had to be followed by the contractors. Some of the main requirements are presented in this section.

The concrete reinforcing contractor was required to submit certified copies of all mill test reports. Mill test reports had to certify that the bars were in compliance with the project specifications. Among other things, these reports indicate the material's chemical composition and mechanical properties.

The manufacturer was required to submit certificates indicating that all employed welders had passed the qualification test specified in CSA W47.1 within the preceding 12 months. CSA W47.1 is a standard published by CSA Group titled "Certification of companies for fusion welding of steel". CSA W47.1 details requirements for companies, welding operators, supervisors, engineers, and procedures to be certified by CSA.

All concrete reinforcing steel was required to comply with one or more standards. This information is summarized in Table 4.2.

Table 4.2. Concrete reinforcing material requirements

Reinforcing Element	Standard	Description
Reinforcing Steel	CSA G30.18	Specifies requirements for hot-rolled deformed carbon steel bars.
Low-Alloy Reinforcing Steel	CSA G30.18	Specifies requirements for hot-rolled deformed carbon steel bars.
Galvanized Reinforcing Bars	CSA G30.18	Specifies requirements for hot-rolled deformed carbon steel bars.
	ASTM A767	Specifies requirements to cover reinforcing bars with protective zinc coatings by immersion.
Epoxy-Coated Reinforcing Bars	CSA G30.18	Specifies requirements for hot-rolled deformed carbon steel bars.
	ASTM A775	Specifies requirements to cover reinforcing bars with protective epoxy coating by electrostatic spray.
Epoxy-Coated Steel Wire	ASTM A884	Specifies requirements for deformed and plain steel wire reinforcement covered with protective epoxy coating.
Welded Steel Wire Reinforcement	ASTM A1064	Specifies requirements for welded wire reinforcement produced from hot-rolled rod.
Stud Rail Assemblies	ASTM A108	Specifies requirements for cold-finished carbon and alloy steel bars for heat treatment, machining into components, or for as-finished condition as shafting or in constructional applications.
	ASTM A1044	Specifies requirements for steel stud assemblies for shear reinforcement of concrete.

All concrete reinforcing was specified to be fabricated in accordance with CSA A23.1/A23.2 and RSIC - Reinforcing Steel Manual of Standard Practice. CSA A23.1/A23.2 is a standard published by CSA Group titled “Concrete materials and methods of concrete construction / Test methods and standard practices for concrete”. The standard presents requirements for the materials and installation methods of concrete used in construction of residential buildings, that conform to Part 9 of the National Building Conde of Canada. RSIC - Reinforcing Steel Manual of Standard Practice is a standard published by the Reinforcing Steel Institute of Canada that, among other topics, presents fabrication specifications up to current codes, standard, and practices.

Welding had to be performed in accordance with CSA W186 titled “Welding of reinforcing bars in reinforced concrete construction bundle”. The standard present requirements for:

- The design, fabrication, and inspection of welded connections utilizing deformed reinforcing bars.
- Direct welding of deformed reinforcing bar or through splice members.
- Welding of deformed reinforcing bars to structural steel members.

Stud rail assemblies were required to be tested for bending and tension in accordance with ASTM A370 and AWS D1.1. Stud rails used for testing were not permitted to be used in the structure.

- ASTM A370: Standard Test Methods and Definitions for Mechanical Testing of Steel Products
- AWS D1.1: Structural Welding Code published by the American Welding Society

Placement of the reinforcement had to be done in accordance with CSA A23.1, CSA A23.3 and the RSIC Manual of Standard Practice.

- CSA A23.1 (Concrete materials and Methods of Concrete Construction): The standard presents requirements for the materials and installation methods of concrete used in construction of residential buildings, that conform to Part 9 of the National Building Conde of Canada. This includes specifications to secure reinforcement against displacement, and positioning tolerances.
- CSA A23.3 (Design of Concrete Structures): This Standard specifies requirements, in accordance with the National Building Code of Canada, for the design and strength evaluation of reinforced concrete structures.

- RSIC Manual of Standard Practice: Standard published by the Reinforcing Steel Institute of Canada that, among other topics, presents placement specifications up to current codes, standard, and practices.

Project specifications require placing of reinforcement to be reviewed by the Consultant (The Structural Engineer) before placement of concrete.

4.2.2 Cast In-Place Concrete Requirements and Specifications

The cast in-place concrete requirements and specifications that had to be followed by the contractors are presented in Section 03 30 00 of the project specifications. Some of these main requirements are presented in this section.

- For each concrete mixture, the contractor was required to submit a certificate indicating that concrete complied with CSA A23.1/A23.2.
- A sample of each proposed mixture had to be supplied to a testing agency and the consultant, at least 14 days prior to the first pour. Information related to all used admixtures had to be included.
- Placement had to be done in accordance with CSA A23.1/A23.2, which includes requirements for density, mixing and transportation, conveying, cold weather placement, hot weather placement, concrete finishing, and curing and protection.
- For self-consolidating concrete, samples had to be prepared and the following tests had to be performed in accordance with CSA A23.1/A23.2 before placing:
    - Slump flow
    - J-ring

- L-box
- Columns segregation

- All elements of the mix design were required to comply with a standard. This information is summarized in Table 4.3.

Table 4.3. Cast in-place concrete material requirements

Element	Standard	Description
Blended Hydraulic Cement	CSA A3001	Specifies the chemical, physical, and uniformity requirements of cementitious materials used in concrete. Includes required tests and procedures for inspection and sampling.
Supplementary Cementing Materials	CSA A3001	
Fine and Coarse Aggregates	CSA A23.1	Specifies requirements for concrete materials used in construction of residential buildings that conform with Part 9 of the National Building Code of Canada.
Water	CSA A23.1	
Air Entrainment Admixture	ASTM C260	Specifies requirements for materials to be used as air-entraining admixtures to be added to concrete in the field.
Water Reducing Admixture	ASTM C494	Specifies requirements for materials to be used as chemicals admixtures to be added to hydraulic-cement concrete. Includes testing methods.
Retarding Admixture	ASTM C494	
Accelerating Admixture	ASTM C494	
High-Range Water Reducing Admixture	ASTM C494	
Viscosity-Modifying Admixture	ASTM C494	
Plasticizing and Retarding Admixture	ASTM C1017	Specifies requirements for materials to be used as chemicals admixtures to be added to produce flowing concrete.

- When used, joint filler had to be asphalt impregnated fibreboard, in compliance with ASTM D1751 (Standard Specification for Performed Expansion Joint Filler for Concrete Paving and Structural Construction).
- When used, joint sealant had to be self-leveling and two-part polyurethane type, in compliance with ASTM C920 (Standard Specification for Elastomeric Joint Sealants).

4.2.3 Field Reviews

To assure and control the quality of the concrete structure, The Structural Engineer carried out a series of site reviews to ensure that the structural elements were constructed following all

drawings and specifications. These site reviews were documented in site reports and delivered to the Construction Manager, the Reinforcing Steel Contractor, and the Concrete Contractor. These reviews were mandatory, and the contractors were clearly instructed not to place or conceal any elements of the structure before a review from The Structural Engineer. To avoid delays, taking photos and sending them for review was also permitted. In any case, concrete placement or concealing elements was not permitted before a notification from The Structural Engineer. Table 4.4 presents a sample of the observations documented in the reports.

Table 4.4. Reinforced concrete elements observations from site reports

Date	Observations	Action Required
12/2/2015	Ensure that a clearance of 75mm is kept from reinforcing to subgrade at all pad footings.	Follow instructions and send pictures indicating compliance.
	Ensure dowels will achieve a 750mm lap splice at all pad footings.	
	Ensure that all water is removed from pits prior to placement of concrete.	
12/22/2015	Reinforcing in core 1 raft is missing the two south perimeter soil anchors, shear wall vertical dowels are not hooked and do not have proper embedment, soil anchors are missing the double corrosion protection sleeve.	Add all missing elements, send pictures of all mentioned items indication compliance with drawings and specifications before concealment.
1/4/2016	Core 2 raft reinforcement is still in progress. Vertical splices on core 1 do not conform to specifications, tension capacity bar couplers are missing.	The Structural Engineer to be on site January 5th to review reinforcement in core 2 before concealment. Core 1 vertical splices to be installed in accordance to drawings and specifications. Send pictures indicating compliance.
1/5/2016	East clay wall collapsed, covering bars with soil. Bars must be cleaned before concrete pour. Core 2 raft reinforcement meet specifications.	Follow instructions and send pictures indicating compliance.
1/17/2016	Water tank slab and raft, and all perimeter walls, were poured without structural review by The Structural Engineer. Contractors must follow the stablished line of communication and not pour or conceal elements before review.	Send pictures of all elements that were poured without a proper review.
2/5/2016	Reviewed reinforcement or core 1 requires diagonals around penetration on far west wall. Reinforcing over door does not conform to drawings and specifications, installed cross headers are not permitted.	Follow instructions and send pictures indicating compliance. Install reinforcing over doors following drawings and specifications.
02/17/2016	Horizontal reinforcement missing at both door headers of core 2. Horizontal ties missing at south west zone.	Add missing elements. Send pictures indicating compliance for review.

As it can be seen, the observations made by The Structural Engineer were very detailed and helped to guarantee compliance with the structural documents of every single element.

4.3 CLT Panels

The QA/QC practices related to the CLT panels are presented in this section. These practices are discussed following the order presented in Figure 4.24.

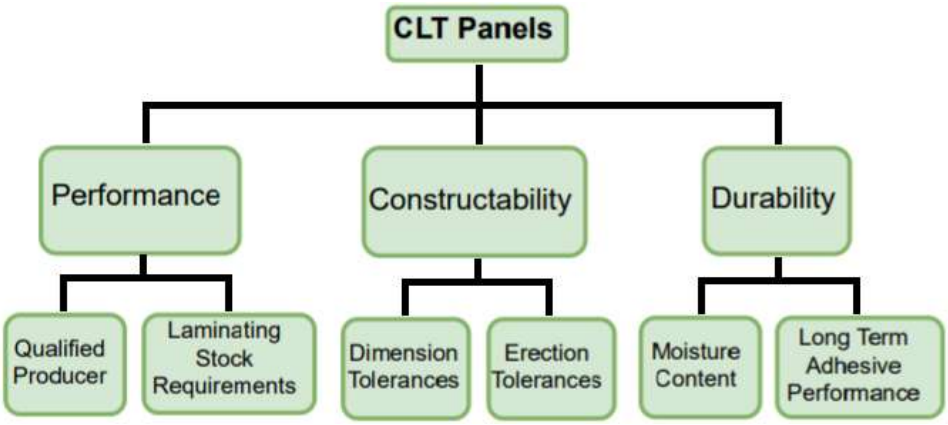

Figure 4.24. Classification of CLT panels QA/QC processes

4.3.1 Performance

This section presents the set of QA/QC practices that were put in place to guarantee the performance of the CLT panels. This section shows that the performance of the timber elements was mainly guaranteed by requiring contractors to follow established and well-known industry standards. As it will be shown, the requirements of this standards were either met or exceeded.

4.3.1.1 Require the Mass Timber Manufacturer to have a Certificate of Conformance

The project specifications (project specifications, section 06 15 23) require the CLT Mass Timber Manufacturer to obtain a Certificate of Conformance indicating compliance with the

Standard for Performance-Rated Cross-Laminated Timber (ANSI/APA PRG 320), published by the American National Standard Institute (ANSI) and the American Plywood Association (APA). The requirements of this standard include dimension tolerances, performance requirements, and test methods for CLT panels.

ANSI/PRG 320 also requires the manufacturer to follow a QA/QC process that includes an on-going evaluation of the CLT panels during the production process, using sampling methods. This is done to confirm that the quality of the CLT panels is satisfactory and in compliance with the standard. The QA/QC process also requires the manufacturer to carry out an inspection on all finished products to check:

- Dimensions and shape
- Type, quality and location of structural bondlines (layers of adhesive)
- Moisture content
- Lumber species, grades, placement, and orientation
- That the information in the identification mark is correct

The Mass Timber Manufacturer, confirmed that PRG 320 was fully followed and all requirements were met during production. In fact, the Mass Timber Manufacturer had a standing Certificate of Conformance with PRG 320 before its participation in the TWH since this certificate is commonly required by their clients in Canada. This is partially because CSA O86 (Engineering Design in Wood), which is the main standard followed in Canada for the structural design of timber structures, requires CLT panels to be in accordance with ANSI/APA PRG 320.

4.3.1.2 Laminating Stock Requirements

As described in ANSI/APA PRG 320, CLT is an engineered wood product made of orthogonal layers that are glued together to make up the panels. These layers are an arrangement of laminations (pieces of lumber that have been prepared for laminating) with the same thickness, grade, and combination of species (ANSI & APA, 2017). Being one of the main components of the CLT panels, the grade and characteristics of the laminations is of key importance to the performance of the panels. The project specifications (project specifications, section 06 15 23) indicate the grades of the laminating stock. These grades match or exceed the requirements of ANSI/APA PRG 320, as presented in Table 4.5.

Table 4.5. Laminating stock requirements

Layer	TWH Specifications	ANSI/APA PRG 320 (Minimum grade)
1st	1650f-1.5E MSR	1200f-1.2E MSR
2nd	Visual grade No. 1, No. 2 SPF or better	Visual grade No. 3
3rd	Visual grade No. 1, No. 2 SPF or better	Visual grade No. 2
4th	Visual grade No. 1, No. 2 SPF or better	Visual grade No. 3
5th	1650f-1.5E MSR	1200f-1.2E MSR

MSR: machine stress-rated lumber.
1650f: specified bending strength of 1650[psi]
1.5E: modulus of elasticity of $1.5x10^6$[psi]
SPF: Spruce-Pine-Fir (used to denote a group of Canadian lumber species with similar properties)

Additionally, the lumber of the 1st and 5th layer is machine stress rated (MSR). In Canada, MSR lumber must follow the 2014 Standard Grading Rules for Canadian Lumber published by the National Lumber Grades Authority (NLGA). NLGA requires each piece of MSR lumber to go through non-destructive mechanical stress rating tests, and to be marked to indicate its mechanical properties (NLGA, 2014). The lumber of the 1st and 5th layer, 1650f-1.5E MSR, guarantees a bending strength of 1650 [psi] and a modulus elasticity of $1.5x10^6$ [psi]. The selection of these grades responds to the specific performance needs of the TWH.

The Mass Timber Manufacturer confirmed that the laminating stock requirements were met. The final configuration of the CLT panels can be seen in Figure 4.25.

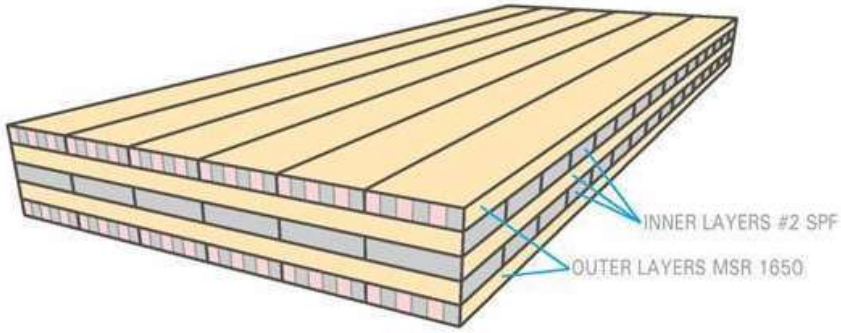

Figure 4.25. CLT panels configuration (courtesy of Structurlam Mass Timber Corporation)

4.3.2 Constructability

The TWH employed a large number of prefabricated elements during construction, including timber elements and envelope panels. The high level of prefabrication demanded high precision during construction to assure a proper fit of all elements in their designated positions. The project team also deemed modifications to the CLT panels, such as cuts or reaming of holes, to be a delicate subject requiring written approval from the Structural Engineer. Thus, the following QA/QC practices were put in place to avoid issues during construction.

4.3.2.1 Dimensional Tolerances

The project specifications (project specifications, section 06 16 23) specifies the dimensional tolerances of the CLT panels. These tolerances are presented in Table 4.6, comparing them with the ones required by ANSI/APA PRG 320.

Table 4.6. Dimensional tolerances for CLT panels

Dimensional Tolerance	TWH Specifications	ANSI/APA PRG 320
Thickness	1.6mm	1.6mm
Width	2mm	3.2mm
Length	2mm	6.4mm
Squareness	2mm	3.2mm
Straightness	1mm	1.6mm

As shown in Table 4.6, the TWH tolerances are generally tighter than the ones required by ANSI/APA PRG 320. The TWH required tighter tolerances because of the large floor area that had to be covered with CLT panels and the high level of prefabrication that was employed. For instance, each panel was custom-made with utility cuts to fit in a predetermined position. Additionally, the prefabricated envelope required the perimeter of all floors to be aligned. According to the Structural Engineer, these modified tolerances were specified to prevent small dimensional errors to add up and cause issues during construction. The Mass Timber Installer, also deemed these tolerances to be appropriate. The Mass Timber Installer believes that these tolerances prevented additional challenges or issues when fitting the CLT panels in their predetermined positions. Any smaller an the panels would have been more challenging to fit together, any larger and it would have been more challenging to meet the minimum gap tolerances between the panels.

As part of its quality control process, the Mass Timber Manufacturer checked compliance with the dimensional tolerances. This process included a precise measurement of each timber element. These measurements were recorded as shown in Figure 4.26 and Figure 4.27.

#			SPLP Measure				Detail Specification			Difference		
Level	Size	Mark	Length	Width	Diag	Moisture Content %	Length2	Width3	Diag4	Length5	Width6	Diag7
8	12	24	11808	2847	12002	9.2	11808.5	2847	12002.5	-0.5	0	-0.5
8	12	25	11810	2848	12002	9.2	11808.5	2847	12002.5	1.5	1	-0.5
8	6	26	5895	2847	6546	9.3	5897	2847	6548.3	-2	0	-2.3
8	8	27	7997	2847	8424	10.0	7997	2847	8424.6	0	0	-0.6
8	6	28	5897	2846	6548	10.3	5897	2847	6548.3	0	-1	-0.3
8	12	29	11810	2848	12061	9.7	11808.5	2847	12059.4	1.5	1	1.6
9	8	1	7808	2847	8311	10.3	7808.5	2847	8311.3	-0.5	0	-0.3
9	8	2	7996	2847	8466	9.5	7997	2847	8466.1	-1	0	-0.1
9	8	3	7997	2847	8466	10.8	7997	2847	8466.1	0	0	-0.1
9	8	4	7996	2847	8465	10.2	7997	2847	8466.1	-1	0	-1.1
9	8	5	7996	2846	8466	10.0	7997	2847	8466.1	-1	-1	-0.1
9	8	6	7997	2847	8467	7.8	7997	2847	8466.1	0	0	0.9
9	8	7	7809	2847	8311	8.3	7808.5	2847	8311.3	0.5	0	-0.3
9	12	8	11810	2847.5	12082	9.5	11808.5	2847	12080.8	1.5	0.5	1.2
9	8	9	7997	2847	8402	9.6	7997	2847	8401.9	0	0	0.1
9	8	10	7997	2847	8402	7.5	7997	2847	8401.9	0	0	0.1
9	8	11	7997	2847	8401	10.4	7997	2847	8401.9	0	0	-0.9
9	8	12	7997	2847	8402	10.2	7997	2847	8401.9	0	0	0.1
9	12	13	11809	2847	12080	N/A	11808.5	2847	12080.8	0.5	0	-0.8
9	8	14	7810	2847.5	8247.5	9.3	7808.5	2847	8247.5	1.5	0.5	0
9	8	15	7998	2848	8424	9.5	7997	2847	8424.6	1	1	-0.6
9	8	16	7997	2847	8425	8.0	7997	2847	8424.6	0	0	0.4
9	8	17	7997	2847	8402	9.1	7997	2847	8401.9	0	0	0.1
9	8	18	7997	2847	8375	9.5	7997	2847	8375.6	0	0	-0.6
9	8	19	7997	2846	8376	7.7	7997	2847	8375.6	0	-1	0.4
9	8	20	7809	2847.5	8246	10.3	7808.5	2847	8247.5	0.5	0.5	-1.5
9	12	21	11808	2847	12001.5	10.8	11808.5	2847	12002.5	-0.5	0	-1
9	10	22	9897	2846	10233	11.3	9897	2847	10233	0	-1	0
9	10	23	9897	2847	10232	9.2	9897	2847	10233	0	0	-1
9	12	24	11808	2847	12003	10.3	11808.5	2847	12002.5	-0.5	0	0.5
9	12	25	11809	2847	12001	9.0	11808.5	2847	12002.5	0.5	0	-1.5
9	6	26	5896	2846	6547	10.7	5897	2847	6548.3	-1	-1	-1.3
9	8	27	7998	2848	8425	9.6	7997	2847	8424.6	1	1	0.4
9	6	28	5895	2846	6548	11.1	5897	2847	6548.3	-2	-1	-0.3
9	12	29	11809	2847	12060	9.0	11808.5	2847	12059.4	0.5	0	0.6
10	8	1	7808	2847	8312	8.9	7808.5	2847	8311.3	-0.5	0	0.7
10	8	2	7997	2846	8467	9.8	7997	2847	8466.1	0	-1	0.9

Figure 4.26. CLT quality control data-panel dimensions (courtesy of Structurlam Mass Timber Corporation)

#			Other SPLP Measure (L to R, T to B)						Other Detail Specification (L to R, T to B)						Difference					
Level	Size	Mark	1	2	3	4	5	6	M1	M2	M3	M4	M5	M6	D1	D2	D3	D4	D5	D6
8	12	24	3566	865	1158	841	848	7376	3566	865	1158.5	840	848.5	7377.5	0	0	-0.5	1	-0.5	-1.5
8	12	25	N/A	N/A	N/A	N/A	N/A	N/A	N/A	N/A	N/A	N/A	N/A	N/A	N/A	N/A	N/A	N/A	N/A	N/A
8	6	26	N/A	N/A	N/A	N/A	N/A	N/A	N/A	N/A	N/A	N/A	N/A	N/A	N/A	N/A	N/A	N/A	N/A	N/A
8	8	27	N/A	N/A	N/A	N/A	N/A	N/A	N/A	N/A	N/A	N/A	N/A	N/A	N/A	N/A	N/A	N/A	N/A	N/A
8	6	28	N/A	N/A	N/A	N/A	N/A	N/A	N/A	N/A	N/A	N/A	N/A	N/A	N/A	N/A	N/A	N/A	N/A	N/A
8	12	29	N/A	N/A	N/A	N/A	N/A	N/A	N/A	N/A	N/A	N/A	N/A	N/A	N/A	N/A	N/A	N/A	N/A	N/A
9	8	1	N/A	N/A	N/A	N/A	N/A	N/A	N/A	N/A	N/A	N/A	N/A	N/A	N/A	N/A	N/A	N/A	N/A	N/A
9	8	2	N/A	N/A	N/A	N/A	N/A	N/A	N/A	N/A	N/A	N/A	N/A	N/A	N/A	N/A	N/A	N/A	N/A	N/A
9	8	3	N/A	N/A	N/A	N/A	N/A	N/A	N/A	N/A	N/A	N/A	N/A	N/A	N/A	N/A	N/A	N/A	N/A	N/A
9	8	4	N/A	N/A	N/A	N/A	N/A	N/A	N/A	N/A	N/A	N/A	N/A	N/A	N/A	N/A	N/A	N/A	N/A	N/A
9	8	5	N/A	N/A	N/A	N/A	N/A	N/A	N/A	N/A	N/A	N/A	N/A	N/A	N/A	N/A	N/A	N/A	N/A	N/A
9	8	6	N/A	N/A	N/A	N/A	N/A	N/A	N/A	N/A	N/A	N/A	N/A	N/A	N/A	N/A	N/A	N/A	N/A	N/A
9	8	7	N/A	N/A	N/A	N/A	N/A	N/A	N/A	N/A	N/A	N/A	N/A	N/A	N/A	N/A	N/A	N/A	N/A	N/A
9	12	8	7380	849	843	1159	868	3567	7377.5	848.5	840	1158.5	865	3566	-2.5	0.5	3	0.5	2	1
9	8	9	3566	866	847	840	1158	3565	3566	865	848.5	840	1158.5	3566	0	1	-1.5	0	-0.5	-1
9	8	10	3565	866	847	841	1161	3564	3566	865	848.5	840	1158.5	3566	-1	1	-1.5	1	2.5	-2
9	8	11	3566	865	847	840	1158	3566	3566	865	848.5	840	1158.5	3566	0	0	-1.5	0	-0.5	0
9	8	12	3565	865	847	840	1158	3565	3566	865	848.5	840	1158.5	3566	-1	0	-1.5	0	-0.5	-1
9	12	13	3566	866	847	840	1158	7375	3566	865	848.5	840	1158.5	7377.5	0	1	-1.5	0	-0.5	-2.5
9	8	14	N/A	N/A	N/A	N/A	N/A	N/A	N/A	N/A	N/A	N/A	N/A	N/A	N/A	N/A	N/A	N/A	N/A	N/A
9	8	15	N/A	N/A	N/A	N/A	N/A	N/A	N/A	N/A	N/A	N/A	N/A	N/A	N/A	N/A	N/A	N/A	N/A	N/A
9	8	16	N/A	N/A	N/A	N/A	N/A	N/A	N/A	N/A	N/A	N/A	N/A	N/A	N/A	N/A	N/A	N/A	N/A	N/A
9	8	17	N/A	N/A	N/A	N/A	N/A	N/A	N/A	N/A	N/A	N/A	N/A	N/A	N/A	N/A	N/A	N/A	N/A	N/A
9	8	18	N/A	N/A	N/A	N/A	N/A	N/A	N/A	N/A	N/A	N/A	N/A	N/A	N/A	N/A	N/A	N/A	N/A	N/A
9	8	19	N/A	N/A	N/A	N/A	N/A	N/A	N/A	N/A	N/A	N/A	N/A	N/A	N/A	N/A	N/A	N/A	N/A	N/A
9	8	20	N/A	N/A	N/A	N/A	N/A	N/A	N/A	N/A	N/A	N/A	N/A	N/A	N/A	N/A	N/A	N/A	N/A	N/A
9	12	21	7374	1159	841	848	865	3565	7377.5	1158.5	840	848.5	865	3566	-3.5	0.5	1	-0.5	0	-1
9	10	22	5465	867	N/A	840	N/A	3565	5466	865	1158.5	840	848.5	3566	-1	2	N/A	0	N/A	-1
9	10	23	3566	866	1158	842	849	5465	3566	865	1158.5	840	848.5	5466	0	1	-0.5	2	0.5	-1
9	12	24	3565	867	1158	840	848	7376	3566	865	1158.5	840	848.5	7377.5	-1	2	-0.5	0	-0.5	-1.5
9	12	25	N/A	N/A	N/A	N/A	N/A	N/A	N/A	N/A	N/A	N/A	N/A	N/A	N/A	N/A	N/A	N/A	N/A	N/A
9	6	26	N/A	N/A	N/A	N/A	N/A	N/A	N/A	N/A	N/A	N/A	N/A	N/A	N/A	N/A	N/A	N/A	N/A	N/A
9	8	27	N/A	N/A	N/A	N/A	N/A	N/A	N/A	N/A	N/A	N/A	N/A	N/A	N/A	N/A	N/A	N/A	N/A	N/A
9	6	28	N/A	N/A	N/A	N/A	N/A	N/A	N/A	N/A	N/A	N/A	N/A	N/A	N/A	N/A	N/A	N/A	N/A	N/A
9	12	29	N/A	N/A	N/A	N/A	N/A	N/A	N/A	N/A	N/A	N/A	N/A	N/A	N/A	N/A	N/A	N/A	N/A	N/A
10	8	1	N/A	N/A	N/A	N/A	N/A	N/A	N/A	N/A	N/A	N/A	N/A	N/A	N/A	N/A	N/A	N/A	N/A	N/A
10	8	2	N/A	N/A	N/A	N/A	N/A	N/A	N/A	N/A	N/A	N/A	N/A	N/A	N/A	N/A	N/A	N/A	N/A	N/A

Figure 4.27. CLT quality control data-cuts for utilities (courtesy of Structurlam Mass Timber Corporation)

From left to right, the columns in Figure 4.26 provide the following information:

- Level: level at which the panel was to be installed.
- Size: a rounded approximate of the diagonal of the panel.
- Mark: A number indicating the position of the panel in the designated level.
- SPLP Measure: quality control data indicating the measured length, width, diagonal, and moisture content of the panel.
- Detail Specification: target dimensions of the CLT panels as per the construction drawings.
- Difference: the difference between the measured dimensions of the panels and the target dimensions.

From left to right, the columns in Figure 4.27 provide the following information:

- Other SPLP Measure: measures related to the utility cuts made in the panels. The measures indicate the distance of the cut from the edges and the dimensions of the cut.
- Other Detail Specification: target measures of the utility cuts in the CLT panels.
- Difference: the difference between the measures related to the utility cuts and the target measures.

As it can be seen in Figure 4.26, length and width tolerances were met in all cases. Assessing the precision of utility cuts was not required by the project specification and was an initiative of the Mass Timber Manufacturer. The same level of precision was not necessary for these cuts because utilities had more flexibility to be adjusted onsite. Nonetheless, Figure

4.27 shows that the deviations from the target measures for utility cuts are below 2mm in most cases. Additional dimensions checked by the Mass Timber Manufacturer to ensure compliance include: thickness, squareness, and straightness.

The Mass Timber Manufacturer stated that their production process usually follows the dimension tolerances set by ANSI/APA PGR 320. Thus, the TWH demanded a higher level of precision. To achieve this, the Mass Timber Manufacturer payed special attention to the conditions of the production equipment, which was mostly composed by CNC (computer numerical control) cutting machines. The Mass Timber Manufacturer was constantly squaring and calibrating the production equipment, making sure that all pieces were correctly aligned to avoid errors.

4.3.2.2 Erection Tolerances

During construction, three erection tolerances related to the installation of CLT panels were put in place to avoid constructability issues. These tolerances are:

- Maximum deviation from theoretical base position: ±2mm
- Gaps between panels: ≤4mm
- Maximum deviation in elevation: ±2mm

The Mass Timber Installer hired a surveyor to monitor compliance with these tolerances. The Mass Timber Installer also kept QA/QC logs, recording compliance of each panel. According to the Mass Timber Installer, working with these tolerances is not uncommon for timber structures and complying with them did not cause major challenges and did not require unconventional

levels of care. The tradespeople assigned to this project were conventional framers. They did not require an unconventional training or a special background to perform properly. The Mass Timber Installer recognizes that meeting the erection tolerances helped to prevent cuts or modifications to the CLT panels. According to the Mass Timber Installer, all panels met the erection tolerances.

4.3.3 Durability

4.3.3.1 Moisture Content Requirement

During production, the moisture content of lumber was required to be kept at 12 ± 3% (project specifications, section 06 15 23). This requirement matches the one specified by ANSI/APA PRG 320. According to the Mass Timber Manufacturer, this is a usual requirement of their production process. This requirement is meant to guarantee the durability of the elements and an appropriate performance of the laminating adhesive. Excessively high moisture contents, near 20%, can result in the appearance of mold. Similarly, excessively low moisture contents can affect the setting process of the adhesive. This requirement is achieved by storing and processing the panels in rooms that employ humidifiers to maintain appropriate conditions.

4.3.3.2 Long Term Adhesive Performance

The Mass Timber Manufacturer reported that, to assess the long-term performance of the adhesive, a vacuum-pressure cycle test was performed. This test is described in section 4.4.3.2. of this thesis, being the same as the one used to test the adhesive and bond quality of GLT columns. The results from this test were recorded in electronic test reports as the ones presented in Figure 4.28.

Date:	26/10/2017	Delamination Test		QC Technician:		KM	
Job #	23856	Delamination (mm)		Bondline Length (mm)		Delamination %	
Specimen ID	Number of lams	Bondline	Total all Bondlines	Bondline (300mm)	Total all Bondlines	Bondline	Specimen
27323	3		10	310	620		1.6%
		10		310		3.2%	

Date:	26/10/2017	Delamination Test		QC Technician:		KM	
Job #	23856	Delamination (mm)		Bondline Length (mm)		Delamination %	
Specimen ID	Number of lams	Bondline	Total all Bondlines	Bondline (300mm)	Total all Bondlines	Bondline	Specimen
27326	3		0	318	636		0.0%
				318			

Date:	27/10/2017	Delamination Test		QC Technician:		KM	
Job #	23044	Delamination (mm)		Bondline Length (mm)		Delamination %	
Specimen ID	Number of lams	Bondline	Total all Bondlines	Bondline (300mm)	Total all Bondlines	Bondline	Specimen
27350	7	10	20	308	1848	3.2%	1.1%
		5		308		1.6%	
				308			
				308			
				308			
		5		308		1.6%	

Date:	27/10/2017	Delamination Test		QC Technician:		KM	
Job #	23044	Delamination (mm)		Bondline Length (mm)		Delamination %	
Specimen ID	Number of lams	Bondline	Total all Bondlines	Bondline (300mm)	Total all Bondlines	Bondline	Specimen
27353	7		20	306	1836		1.1%
				306			
		20		306		6.5%	
				306			
				306			
				306			

Figure 4.28. Vacuum-pressure cycle test report for clt panels (courtesy of Structurlam Mass Timber Corporation)

The information recorded in these reports is explained below, using the results of specimen 27323 as an example. From left to right, these test reports present:

- The specimen ID, meant to identify the sample (27323).
- The number of laminations in the specimen (3).
- The delamination in each bondline after the test (zero in the first bondline and 10mm in the second).
- The total length of delamination in all bondlines.
- The total length of each bondline (310mm in each bondline).
- The total added length of all bondlines (620mm).
- The percental delamination in each bondline (0% in the first bondline and 3.2% in the second).
- Total percental delamination in all bondlines (1.6%).

Although these test reports do not correspond to the CLT panels of the TWH, the Mass Timber Manufacturer reported that the format was the same and that all samples showed positive results, with the total percental delamination in all bondlines being below the acceptance requirement of 10%.

4.4 Glued-Laminated Columns

The QA/QC process related to the GLT columns are presented in this section. These practices are presented following the classification shown in Figure 4.29.

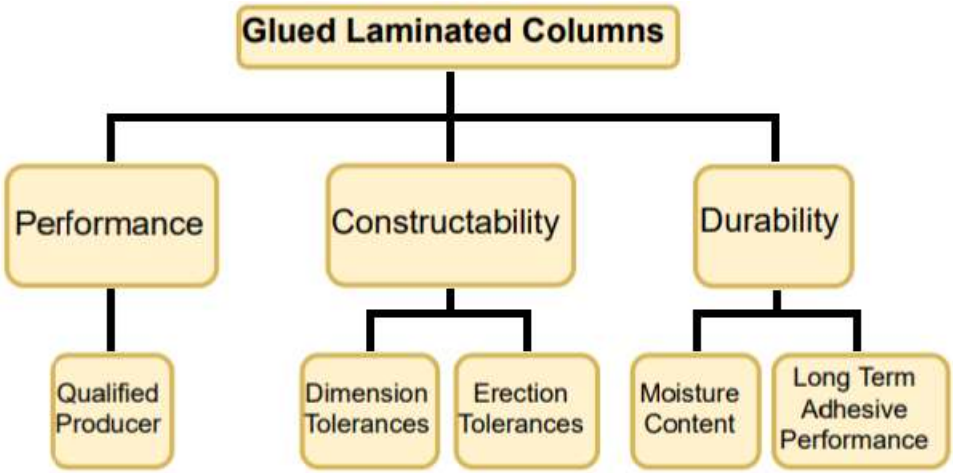

Figure 4.29. Classification of GLT columns QA/QC processes

4.4.1 Performance

Similar to the CLT panels, this study found that the performance of the GLT columns was mainly guaranteed by requiring contractors to follow established and well-known industry standards. These standards and the QA/QC practices that were put in place to guarantee the performance of the GLT columns are presented in this section.

4.4.1.1 Require the Producer to Have a Certificate of Conformance

The project specifications (project specifications, section 06 18 19) required the Mass Timber Manufacturer to obtain a Certificate of Conformance with CSA O122, and also to be certified in accordance with CSA O177. CSA O122 and CSA O177 are National Standards of Canada published by CSA Group (formerly Canadian Standards Association). CSA O122 contains the minimum requirements to manufacture glued-laminated products that comply with CSA O86 (Engineering Design in Wood). CSA O177 outlines the requirements and steps that a manufacturer shall follow to apply for, and obtain, a certification attesting that its facilities,

personnel, and processes are suitable for manufacturing structural GLT in accordance with CSA O122.

According to the Mass Timber Manufacturer, complying with these standards is a common practice in the Canadian industry. Partially, this is because Canadian building codes reference CSA 086 for the design of timber structures and CSA O86 requires all glued-laminated products to be produced following the specifications of CSA O122. As a result, the Mass Timber Manufacturer had a Certificate of Conformance with CSA O122 and O177 before its participation in the TWH project.

4.4.2 Constructability

As with the CLT panels, an appropriate manufacture and installation of columns was critical to assure constructability of the building. Also similar to the CLT panels, cutting the columns was deemed as a delicate subject that required written approval from the Structural Engineer. The following QA/QC practices were put in place to avoid issues during construction.

4.4.2.1 Dimensional Tolerances

The project specifications (project specifications, section 06 18 19) specifies the dimensional tolerances for GLT columns. These tolerances are:

- Maximum deviation of ± 1mm in the total length of the column
- Maximum deviation of ± 0.5mm in the total length of the upper and lower connectors
- Maximum deviation of ± 2mm in the total length of the column assembly

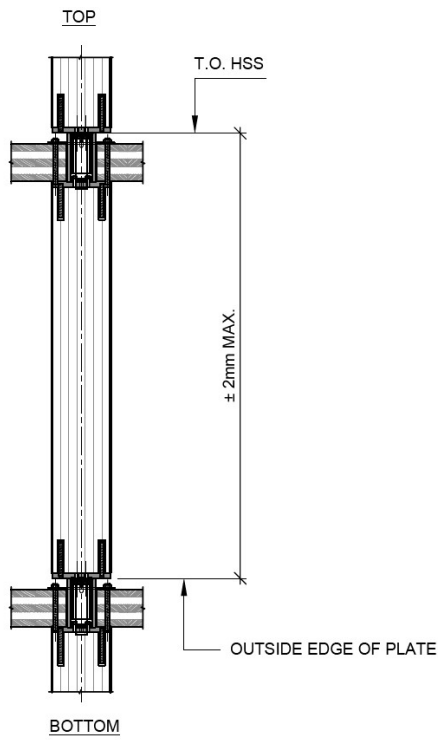

Figure 4.30. Tolerance for the total length of column assembly (courtesy of Urban One Builders)

The Mass Timber Installer believes that these tolerances were necessary and that they should not be relaxed. The required level of precision was so high that a deviation of less than 10mm in the total height of the building had to be corrected during construction at the 11th level. The Mass Timber Installer believes that relaxing the tolerances could have resulted in additional corrections, or more complex and costly procedures. Besides the aforementioned correction, no other cuts to the columns or their connections was required during installation.

The Mass Timber Manufacturer confirmed that the tolerances were met and provided a sample of the quality control data that is presented in Figure 4.31. The target measure for the columns was 2,532mm, with the lower connector (connector B) adding 29mm and the upper connector (connector A) adding 249mm. Therefore, the target measure for the total length of column

assembly was 2,810mm. The Mass Timber Manufacturer assembled the columns and connectors and measured the total length of column assembly, checking compliance with the total dimension tolerance of ± 2mm. After producing the columns of the 3rd and 4th level, the Mass Timber Manufacturer detected a mild calibration error in the equipment used to measure the total length of the column assemblies. This resulted in underestimating the real length of the columns by exactly 1mm. However, after identifying and correcting this issue, all columns were found to be in compliance with all dimensional tolerances.

	A	B	C	D	E	F	G	H	I	J	K	L	M	N	O	P
1	Level	Mark #	Column Measurement	Connector A Height - SPLP	Connector B Height - SPLP	Connector A Height - Monashe	Connector B Height - Monashe	Difference B/W Monashee and SPLP Con.	Difference B/W Monashee and SPLP Con.	Moisture Content %	Measured Assembly Height SPLP	Adjustment for 2800 stick recalibrati	Calculated Length SPLP (Connectors + Column)	Calculated Height Monashee (Connectors + Column)	Difference B/W Adjusted Measure vs. Calculated SP	Difference B/W Adjusted Measure vs. Calculated Monashee
110	3	31	2,531.75	248.85	29.12	249.33	28.97	0.48	-0.15	13.5	2,808.56	2,809.56	2,809.72	2,810.05	0.16	0.49
111	3	32	2,532.25	248.95	28.80	249.49	28.75	0.54	-0.05	9.6	2,809.09	2,810.09	2,810.00	2,810.49	-0.09	0.40
112	3	33	2,532.06	249.00	29.00	249.12	29.00	0.12	0.00	8.4	2,809.97	2,810.97	2,810.06	2,810.18	-0.91	-0.79
113	3	34	2,532.00	249.10	28.95	248.96	28.90	-0.14	-0.05	12.4	2,809.94	2,810.94	2,810.05	2,809.86	-0.89	-0.08
114	3	35	2,531.50	248.97	29.05	249.26	29.00	0.29	-0.05	10.8	2,809.52	2,810.52	2,809.52	2,809.76	-1.00	-0.76
115	3	36	2,532.02	249.06	28.99	249.37	28.92	0.31	-0.07	10.5	2,810.13	2,811.13	2,810.07	2,810.31	-1.06	-0.82
116	3	37	2,531.70	249.17	29.05	249.40	28.94	0.23	-0.11	9.6	2,809.82	2,810.82	2,809.92	2,810.04	-0.90	-0.78
117	3	38	2,532.14	248.99	29.05	249.40	28.90	0.41	-0.15	13.4	2,809.90	2,810.90	2,810.18	2,810.44	-0.72	-0.46
118	3	39	2,531.70	248.95	29.09	249.36	28.81	0.41	-0.28	12.0	2,809.47	2,810.47	2,809.74	2,809.87	-0.73	-0.60
119	3	40	2,532.06	248.82	29.07	249.35	28.93	0.53	-0.14	9.5	2,809.81	2,810.81	2,809.95	2,810.34	-0.86	-0.47
120	3	41	2,531.80	249.03	29.07	249.46	29.00	0.43	-0.07	10.8	2,809.56	2,810.56	2,809.90	2,810.26	-0.66	-0.30
121	3	42	2,532.30	248.79	29.12	249.10	29.07	0.31	-0.05	13.0	2,810.15	2,811.15	2,810.21	2,810.47	-0.94	-0.68
122	3	43	2,531.70	248.82	29.07	249.28	28.88	0.46	-0.19	10.3	2,809.69	2,810.69	2,809.59	2,809.86	-1.10	-0.83
123	3	44	2,531.76	249.17	29.07	249.29	29.09	0.12	0.02	11.5	2,808.82	2,809.82	2,810.00	2,810.14	0.18	0.32
124	3	45	2,532.25	248.87	29.07	248.96	28.98	0.09	-0.09	10.6	2,809.16	2,810.16	2,810.19	2,810.19	0.03	0.03
125	3	46	2,531.87	248.94	29.07	249.21	28.93	0.27	-0.14	11.4	2,808.64	2,809.64	2,809.88	2,810.01	0.24	0.37
126	3	47	2,532.38	249.06	29.07	249.26	29.04	0.20	-0.03	11.0	2,809.36	2,810.36	2,810.51	2,810.68	0.15	0.32
127	3	48	2,532.09	248.90	29.07	249.00	28.98	0.10	-0.09	11.3	2,810.20	2,811.20	2,810.06	2,810.07	-1.14	-1.13
128	3	49	2,531.82	248.95	29.07	249.39	28.97	0.44	-0.10	12.8	2,809.65	2,810.65	2,809.84	2,810.18	-0.81	-0.47
129	3	50	2,532.24	248.91	29.07	249.31	28.83	0.40	-0.24	8.7	2,810.24	2,811.24	2,810.22	2,810.38	-1.02	-0.86
130	3	51	2,532.04	249.12	29.07	249.38	28.95	0.26	-0.12	12.5	2,809.85	2,810.85	2,810.23	2,810.37	-0.62	-0.48
131	3	52	2,532.24	248.80	29.07	248.98	29.00	0.18	-0.07	10.2	2,810.16	2,811.16	2,810.11	2,810.22	-1.05	-0.94
132	3	53	2,531.88	248.84	29.07	249.14	29.00	0.30	-0.07	12.4	2,809.78	2,810.78	2,809.79	2,810.02	-0.99	-0.76
133	3	54	2,532.21	249.19	29.07	249.28	29.07	0.09	0.00	8.3	2,810.19	2,811.19	2,810.47	2,810.56	-0.72	-0.63
134	3	55	2,531.90	248.74	29.07	248.94	28.99	0.20	-0.08	9.5	2,808.65	2,809.65	2,809.71	2,809.83	0.06	0.18
135	3	56	2,532.36	248.98	29.06	249.17	29.00	0.19	-0.06	10.2	2,809.28	2,810.28	2,810.40	2,810.53	0.12	0.25
136	3	57	2,531.88	248.93	29.06	249.30	29.00	0.37	-0.06	10.2	2,808.95	2,809.95	2,809.87	2,810.18	-0.08	0.23
137	3	58	2,532.32	249.17	29.11	249.30	29.10	0.13	-0.01	13.5	2,809.47	2,810.47	2,810.60	2,810.72	0.13	0.25
138	3	59	2,532.02	248.92	29.06	249.16	29.18	0.24	0.12	8.8	2,809.27	2,810.27	2,810.00	2,810.36	-0.27	0.09
139	3	60	2,532.33	248.96	29.12	249.06	29.16	0.10	0.04	10.1	2,809.24	2,810.24	2,810.41	2,810.55	0.17	0.31
140	3	61	2,531.99	249.27	29.12	249.13	29.16	-0.14	0.04	10.5	2,809.02	2,810.02	2,810.38	2,810.28	0.36	0.26

Figure 4.31. Columns quality control data (courtesy of Structurlam Mass Timber Corporation)

From left to right, the columns in Figure 4.31 provide the following information:

- Level: level at which the column was to be installed.
- Mark: a number indicating the position of the column in the designated level.
- Column Measurement: quality control data indicating the measured length of the column.
- Connector A Height – SPLP: total length of connector A as measured by the Mass Timber Manufacturer.
- Connector B Height – SPLP: total length of connector B as measured by the Mass Timber Manufacturer.
- Connector A Height – Monashee: total length of connector A as measured by Monashee Manufacturing.
- Connector B Height – Monashee: total length of connector B as measured by Monashee Manufacturing.
- Difference B/W Monashee and SPL Con. A: difference between the length of connector A as measured by Monashee Manufacturing and the Mass Timber Manufacturer.
- Difference B/W Monashee and SPL Con. B: difference between the length of connector B as measured by Monashee Manufacturing and the Mass Timber Manufacturer.
- Moisture Content: moisture content of columns at the time of measuring the total length of columns assembly.
- Measured Assembly Height SPLP: initially measured height of column assemblies, before identification of the calibration error.
- Adjustment for 2800 stick recalibration: corrected measure of column assemblies after identification of the calibration error.

- Calculated Length SPLP: mathematical estimation of the total length column assembly, calculated by adding the measured length of the column with the length of the connectors as measured by SPLP.
- Calculated Height Monashee: mathematical estimation of the total length column assembly, calculated by adding the measured length of the column with the length of the connectors as measured by Monashee Manufacturing.
- Difference B/W Adjusted Measure Vs. Calculated SPLP: Difference between the measured length of the column assembly and the calculated length using SPLP data.
- Difference B/W Adjusted Measure Vs. Calculated Monashee: Difference between the measured length of the column assembly and the calculated length using Monashee Manufacturing data.

The following conclusions are drawn from examining the data in Figure 4.31:

- The length of all the columns presented in the sample data is within the ± 1mm tolerance.
- According to both, the Mass Timber Manufacturer and Monashee Manufacturing measures, all connectors complied with the ± 0.5mm tolerance.
- The difference between the measures done by the Mass Timber Manufacturer and Monashee Manufacturing is due to the precision and calibration of the equipment used.
- The length of all column assemblies is within the ± 2mm tolerance.
- The close match between the calculated and measured lengths of column assemblies is an additional check that increases confidence in the quality control data.

- These close matches also indicate a proper connection and fit between the columns and the connectors, with no additional length being added or lost (for example, by misalignments in the upper and lower faces of the column).

To measure the length of the connectors, the Mass Timber Manufacturer acquired the measuring equipment presented in Figure 4.32. In order to achieve the high precision needed and assess compliance with a tolerance of ± 0.5mm, the steel plate of the measuring equipment was fabricated employing plasma cutting, meant to guarantee a leveled surface.

Figure 4.32. Connector measuring equipment (courtesy of Structurlam Mass Timber Corporation)

An additional tabulation of the quality control data was done by the Mass Timber Manufacturer, and a sample is provided in Figure 4.33. This tabulation records the total length of column assembly of each column, classifying them by floor. The provided sample contains measurements of 384 columns, with all of them complying with the dimension tolerance. The complete set of data was provided to the Construction Manager for their review.

		Adjusted Assembly Height												
Level #		4	5	6	7	8	9	10	11	12	13	14	15	16
Required Height		2810	2810	2810	2810	2810	2810	2810	2810	2810	2810	2810	2810	2810
Hide Level ?		No	No	No	No	No	No	No	No	No	No	No	No	No
Column #	1	2,809.38	2,809.54	2,809.21	2,809.23	2,810.00	2,809.32	2,809.57	2,809.79	2,810.03	2,809.81	2,810.00	2,809.75	2,810.80
	2	2,810.68	2,810.10	2,810.11	2,808.73	2,809.15	2,810.25	2,808.93	2,809.49	2,810.16	2,809.86	2,810.17	2,810.11	2,810.67
	3	2,809.80	2,809.31	2,809.40	2,809.09	2,809.40	2,810.23	2,809.10	2,809.53	2,810.22	2,810.29	2,809.76	2,809.68	2,810.90
	4	2,810.60	2,809.77	2,809.96	2,808.98	2,808.92	2,810.10	2,809.96	2,809.97	2,810.18	2,809.89	2,810.03	2,809.68	2,810.62
	5	2,809.87	2,809.14	2,809.50	2,809.48	2,809.90	2,809.46	2,808.99	2,809.91	2,810.23	2,810.46	2,809.73	2,809.74	2,810.85
	6	2,810.58	2,809.83	2,809.91	2,808.88	2,809.10	2,810.27	2,809.93	2,809.61	2,809.73	2,810.48	2,810.16	2,810.03	2,810.55
	7	2,809.78	2,809.27	2,809.19	2,809.26	2,809.76	2,809.75	2,809.51	2,809.66	2,810.32	2,809.97	2,809.93	2,809.71	2,811.00
	8	2,810.77	2,809.53	2,810.02	2,808.94	2,809.37	2,809.83	2,809.74	2,810.09	2,810.17	2,810.24	2,810.16	2,809.71	2,810.70
	9	2,809.65	2,809.35	2,809.28	2,809.40	2,809.32	2,809.52	2,809.41	2,810.12	2,810.20	2,810.28	2,810.05	2,809.77	2,810.66
	10	2,810.80	2,809.61	2,809.53	2,808.65	2,809.17	2,809.80	2,809.82	2,809.89	2,809.70	2,810.42	2,810.30	2,809.99	2,810.21
	11	2,809.83	2,809.17	2,809.13	2,808.87	2,809.42	2,810.22	2,809.58	2,809.73	2,810.81	2,810.18	2,810.06	2,809.77	2,810.81
	12	2,810.56	2,809.45	2,809.70	2,808.71	2,809.12	2,809.88	2,809.95	2,809.72	2,809.59	2,810.15	2,810.26	2,809.58	2,810.67
	13	2,809.77	2,809.56	2,808.88	2,808.99	2,809.23	2,809.76	2,809.58	2,810.54	2,810.68	2,810.37	2,810.21	2,809.75	2,810.62
	14	2,810.77	2,809.79	2,809.81	2,808.74	2,809.06	2,809.35	2,810.06	2,810.52	2,810.00	2,810.20	2,810.17	2,809.63	2,810.53
	15	2,809.56	2,809.26	2,808.87	2,808.70	2,810.18	2,809.35	2,809.65	2,809.80	2,810.07	2,810.13	2,810.19	2,809.49	2,810.99
	16	2,810.53	2,809.52	2,809.74	2,808.97	2,809.72	2,809.49	2,809.97	2,810.21	2,809.98	2,810.36	2,810.27	2,809.99	2,810.57
	17	2,809.72	2,809.52	2,809.07	2,809.56	2,809.27	2,809.59	2,809.37	2,809.46	2,810.33	2,810.11	2,810.04	2,809.89	2,810.62
	18	2,810.51	2,809.42	2,809.90	2,808.77	2,808.70	2,809.46	2,809.90	2,810.10	2,809.77	2,810.15	2,810.63	2,809.88	2,810.80
	19	2,809.58	2,809.28	2,808.58	2,809.31	2,809.05	2,810.38	2,809.29	2,809.91	2,810.14	2,810.10	2,810.30	2,809.89	2,810.62
	20	2,810.40	2,809.38	2,809.88	2,809.23	2,809.20	2,809.70	2,809.87	2,810.08	2,809.99	2,810.46	2,810.44	2,809.98	2,810.81
	21	2,809.55	2,809.62	2,809.12	2,809.33	2,809.20	2,809.48	2,809.38	2,810.09	2,809.88	2,809.92	2,810.09	2,810.08	2,810.94
	22	2,810.53	2,809.44	2,809.65	2,809.05	2,809.25	2,809.69	2,809.48	2,809.69	2,810.23	2,810.37	2,809.86	2,809.79	2,810.47
	23	2,809.17	2,808.95	2,808.58	2,809.30	2,809.27	2,809.47	2,809.35	2,810.04	2,809.92	2,810.31	2,810.00	2,809.79	2,810.72
	24	2,810.43	2,809.54	2,809.86	2,809.21	2,809.27	2,809.84	2,809.93	2,810.27	2,809.31	2,810.29	2,810.17	2,809.88	2,810.46

Figure 4.33. Total length of column assembly quality control data (courtesy of Structurlam Mass Timber Corporation)

According to the Mass Timber Manufacturer, these tolerances are tighter than the ones being usually followed in their manufacturing process, and the ones specified in their internal quality control and assurance protocols. However, the same production equipment was used. As with the case of the CLT panels, these tolerances required the Mass Timber Manufacturer to be constantly squaring and calibrating the production equipment, making sure that all pieces were correctly aligned to avoid errors.

4.4.2.2 Erection Tolerances

Two erection tolerances were required by the project specifications (project specifications, section 06 18 19). These tolerances were:

- Maximum deviation from plumb of 0.2%
- Maximum deviation of ±2mm in elevation

The same surveyor hired to monitor compliance of CLT panels with erection tolerances was engaged to monitor compliance with the erection tolerances of columns. The Mass Timber Installer kept a QA/QC log, recording compliance of each column. According to the Mass Timber Installer, working with these tolerances is not uncommon for timber structures and complying with them didn't require unconventional levels of care or represented a challenge. The same tradespeople in charge of installing the CLT panels were put in charge of the installation of columns. No special background was required to perform this task, with tradespeople being ready to perform after normal training procedures.

A challenge during installation appeared because the HSS connections allowed the columns a slight level of movement. It was observed during installation that, to secure them in their final position, it was necessary to install the CLT panels of the upper level. This specifically affected the capacity to meet the plumbness requirement. Thus, the columns were revisited and adjusted to their final position after the installation of the upper-level CLT panels. This process proved to be efficient and appropriate, with all columns meeting the plumbness requirement during installation. Same as with the dimensional tolerances, the Mass Timber Installer recognizes that meeting the erection tolerances helped to prevent cuts or modifications to the columns and shouldn't be relaxed.

4.4.3 Durability

4.4.3.1 Moisture Content Requirement

The moisture content of each column was recorded in the manufacturing site and a sample of this data is presented in Figure 4.31. Although the project specifications do not specify levels of moisture for GLT columns, the Mass Timber Manufacturer fully observed the requirements of CSA O122, which require the laminating stock to be stored at moisture levels between 7% and 15% before final surfacing, and equal moisture levels to be kept at the time of gluing. Similar to the CLT panels, these levels of moisture prevent the appearance of mold and provide appropriate conditions for the setting of the adhesive.

Figure 4.34. Offsite measurement of the moisture content of a timber column (courtesy of Structurlam Mass Timber Corporation)

Observing these levels of moisture is a common practice followed by the Mass Timber Manufacturer. Adequate levels of moisture are achieved by storing and processing the columns in rooms that employ humidifiers to maintain controlled conditions.

4.4.3.2 Long Term Adhesive Performance

Since structures have a considerable life span, it is important to assess the durability and long-term performance of the adhesive. To do this, the Mass Timber Manufacturer followed the test procedure specified in CSA O177 as vacuum-pressure cycle test. This test subjects a sample to extreme conditions, to simulate an accelerated aging of the sample, and assess the delamination in each of the bond lines.

To do this, a test specimen is first weighted, determining its original weight to the nearest gram, and then submerged in water at a temperature between 18 and 27 °C. The specimen is then subjected for 30 minutes to a vacuum between 70 and 85 kPa while submerged. The vacuum is then released and a pressure between 480 and 550 kPa is applied for another 2 hours. The specimen is then placed in a drying oven, and dried by applying an air temperature between 65 and 75 °C. The drying process then last between 10 to 15 hours and continues until the weight of the dried specimen is within 15% of its original weight. After this process is completed, the specimen is removed from the oven and the length of delamination is measured. To be accepted, the delamination in each of the bond lines of the specimen must not exceed 10% of the total length of the bond line.

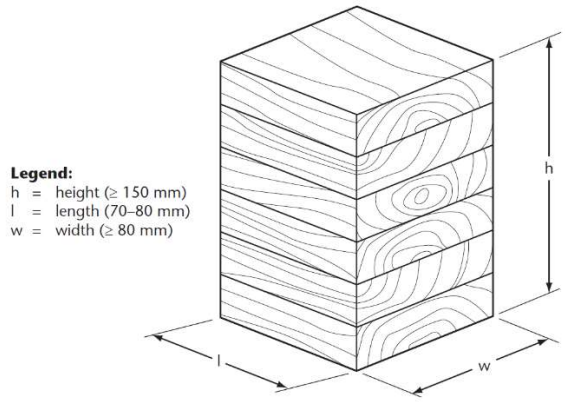

Figure 4.35. Specimen dimensions (CSA, 2015)

Running this test is a typical step in the production process of the Mass Timber Manufacturer, as it is a requirement of CSA O177. Figure 4.36 shows the water tank used to perform the test, capable of submitting the specimen to the required vacuum and test pressure. This is the same tank as the one used to test the adhesive performance of the CLT panels.

Figure 4.36. Water tank for vacuum-pressure cycle test (courtesy of Structurlam Mass Timber Corporation)

Test results of all GLT columns were in conformance with CSA O177, showing an appropriate quality and durability of the adhesive. A sample of a tested specimen is presented in Figure 4.37. Although the specimen does not correspond to one of the GLT columns produced for the TWH, the Mass Timber Manufacturer informed that the used marks and information are the same.

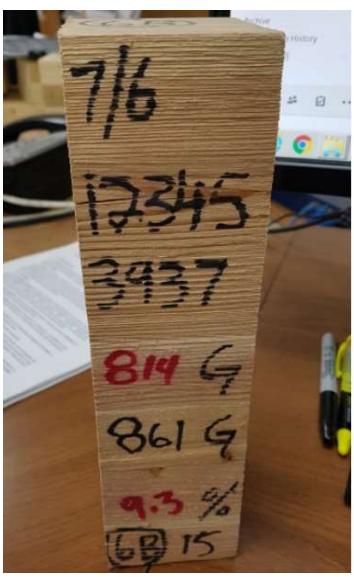

Figure 4.37. Vacuum-pressure cycle test specimen (courtesy of Structurlam Mass Timber Corporation)

From top to bottom, the marks on the specimen indicate:

- Date of the test (6th of July).
- Codes to identify the sample (12345 & 3937).
- Weight of the sample before test (814g).
- Weight of the sample after being oven-dried (861g), must be within 15% of the original weight.
- Moisture content of the sample before test (9.3%).

The results from this test are recorded in the test reports presented in Figure 4.38. As with the test specimen, these test reports do not correspond to the GLT columns produced for the TWH. However, the Mass Timber Manufacturer informed that the format was the same. Regarding the results, specimens of the TWH showed a good performance and passed the test, being below a 10% delamination.

STRUCTURLAM
Intelligence In Wood

Cyclic Delamination Test - T110 (SF 8.1.17)

Date Manufactured: 11/14/17

Testing Conducted by:

Sample 1

Job#	24003	Total number of glue lines:	6
Package #	4534	Total Glue Line Length (mm): (TGLL x (80 mm) x # of glue lines x 2)	960
Glue Type (circle)	Mel Res		
Standard (circle)	ANSI JAS CSA	Total % of Delamination: (Delam/GLL x 100)	Ø
Pre Cook Weight (g):	829		
Post Cook Weight (g):	900	PASS (0 - 10 %) FAIL (> 10 %) RETEST	
Moisture Content (%):	9.1		

Sample 2

Job #	23992	Total number of glue lines:	6
Package #	4527	Total Glue Line Length (mm): (TGLL x (80 mm) x # of glue lines x 2)	960
Glue Type (circle)	Mel Res		
Standard (circle)	ANSI JAS CSA	Total % of Delamination: (Delam/GLL x 100)	2.1%
Pre Cook Weight (g):	815		20
Post Cook Weight (g):	870	PASS (0 - 10 %) FAIL (> 10 %) RETEST	
Moisture Content (%):	9%		

Sample 3

Job #	23956	Total number of glue lines:	5
Package #	4540	Total Glue Line Length (mm): (TGLL x (80 mm) x # of glue lines x 2)	800
Glue Type (circle)	Mel Res		
Standard (circle)	ANSI JAS CSA	Total % of Delamination: (Delam/GLL x 100)	1.6%
Pre Cook Weight (g):	755		13 mm
Post Cook Weight (g):	810	PASS (0 - 10 %) FAIL (> 10 %) RETEST	
Moisture Content (%):	11.7%		

FINGER JOINT TESTING

HORIZONTAL			VERTICAL			
Job #	23423	24012	Job #	23175	23175	23040
Size:	2x10	2x10	Size:	2x6	2x6	2x6
Shift:	DAY	Aft.	Shift:	DAY	Aft	GY
Total Surface Area tested:	5170	5170	Total Surface Area tested:	2660	2660	2660
Total number of glue lines:	11	11	Total number of glue lines:	38	38	38
Total % of Delamination (Delam/SA x 100)	0.8	0.6	Total % of Delamination (Delam/SA x 100)	Ø		
	35	30			15	20

PASS (0 - 5 %) FAIL (> 10 %) RETEST (5 - 10 %)

PASS (0 - 5 %) x3 FAIL (> 10 %) RETEST (5 - 10 %)

Figure 4.38. Vacuum-pressure cycle test report for GLT columns (courtesy of Structurlam Mass Timber Corporation)

The setting and application of the adhesive is done under well-ventilated conditions and personnel are provided with masks to eliminate any chance of health hazards.

4.5 PSL Columns

The QA/QC process related to the PSL columns are presented in this section. These practices are presented following the classification shown in Figure 4.39.

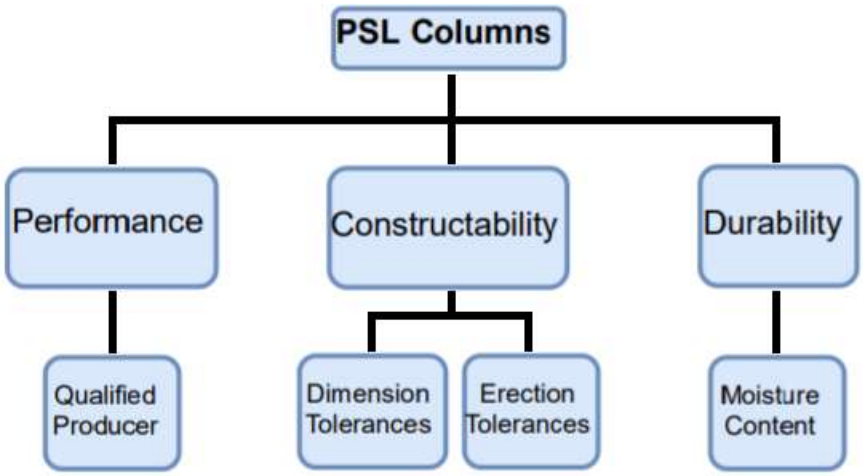

Figure 4.39. Classification of PSL columns QA/QC processes

The QA/QC practices related to PSL columns were similar and, in some cases, identical to the ones designed to assure and control the quality of GLT columns. This section presents the QA/QC practices related to PSL columns, indicating when they were identical to the GLT columns.

4.5.1 Performance

4.5.1.1 Require the Producer to Have a Certificate of Conformance

The project specifications (project specifications, section 06 18 20) required the Mass Timber Manufacturer to obtain a Certificate of Conformance indicating compliance with CSA O86

(Engineering Design in Wood published by CSA Group). CSA O86 is a standard that provides criteria for the structural design and appraisal of structures and structural elements made from wood, including PSL columns (CSA Group, 2014).

4.5.2 Constructability

The constructability QA/QC practices for PSL columns were identical to the ones for GLT columns, and consisted of setting appropriate tolerances and controlling compliance:

- Dimension tolerance: ±1mm in the total column length.
- Dimension Tolerance: ±2mm in total length of column assembly.
- Erection tolerance: maximum deviation from plumb of 0.2% of the total columns height.
- Erection tolerance: maximum deviation of ±2mm from the theoretical base position of the column in both directions.

The production of PSL columns were subcontracted by the Mass Timber Manufacturer. The Mass Timber Manufacturer required the subcontractor to produce the columns in compliance with the project specifications. Once delivered at the Mass Timber Manufacturer production facility, all columns were remeasured, verifying compliance with the dimension tolerances. This quality control data was recorded as shown in Figure 4.31 and Figure 4.33. The complete record was delivered to the Construction Manager. All PSL columns complied with the dimension tolerances.

At the Mass Timber Manufacturer's production facility, PSL columns and connectors were connected, and compliance of the total length of column assembly with the dimension tolerance

(±2mm) was checked. All columns successfully complied with this specification. The same equipment as was used to measure the GLT columns was used.

4.5.3 Durability

4.5.3.1 Moisture Content Requirement

The moisture content of PSL columns was required to be kept between 7% and 16% (project specifications, section 06 18 20). Since GLT columns had to be kept at moisture levels between 7% and 15%, all columns were stored under similar conditions and the same practices were followed.

Chapter 5: Quality Assurance and Quality Control of the Building Envelope

This chapter describes some of the main QA and QC practices related to the building envelope. The main parties involved in the manufacture, testing, and installation of the envelope panels are presented in Table 5.1.

Table 5.1. Parties involved in the manufacture, testing, and installation of envelope panels

Organization	Role
Envelope Contractor	Manufacturer and installer
Glazing Subcontractor	Glass and glazing supplier and installer subcontracted by the Envelope Contractor
Envelope Consultant	Envelope consultant: oversaw manufacturing, laboratory testing, and installation processes. Carried onsite tests.
Envelope Testing Agency	Independent testing agency, carried laboratory tests and issued the Envelope Test Report.

The QA/QC practices were identified by reviewing the project specification and were classified following the breakdown presented in Figure 5.1.

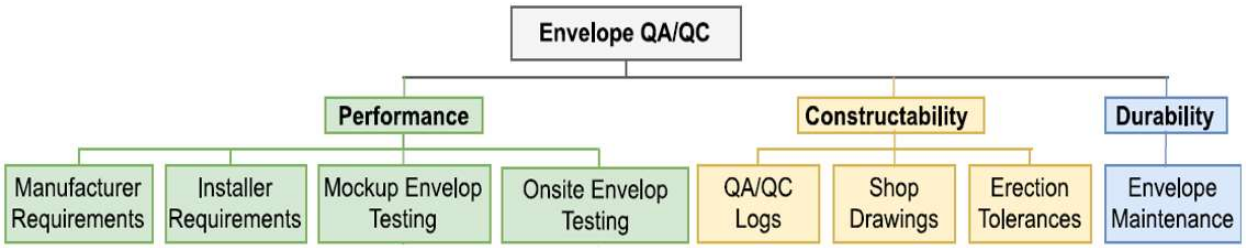

Figure 5.1. Envelope QA/QC diagram

A brief definition of each of the categories and sub-categories is presented below.

- Performance: practices meant to guarantee and check an adequate performance of the envelope (e.g. structural, thermal, air and water tightness).

    - Manufacturer Requirements: processes and checks meant to assure that the manufacturer is qualified to produce the envelope panels in compliance with the specifications.
    - Installer Requirements: processes and checks meant to assure that the installer is qualified to install the envelope panels in compliance with the specifications.
    - Mockup Envelope Tests: a series of tests carried in a laboratory setting on a mockup.
    - Onsite Envelop Tests: a series of tests carried on site, testing selected sections of the building envelope.
- Constructability: practices meant to guarantee and check a construction process free from issues (e.g. delays, overruns, errors).
    - QA/QC Logs: requirement to track the state of the panels during manufacture and installation in the form of QA/QC logs.
    - Shop Drawings: submittal and review of shop drawings indicating the geometry, materials, installation methods, and other information related to the envelope panels, meant to assure compliance with the project requirements.
    - Erection Tolerances: tolerances indicating the required level of precision during the installation of the envelope panels.
- Durability: practices meant to guarantee an adequate durability of the envelope.
    - Envelope Maintenance: recommended procedures to maintain the envelope in adequate shape during operation. This thesis presents basic information related to this topic. More detailed information related to the maintenance of the envelope

and how its long-term performance will be guaranteed can be explored in future studies.

5.1 Performance

The building envelope was required to achieve adequate levels of performance in different aspects including:

- Resistance to air leakage.
- Resistance to water penetration.
- Resistance to condensation.
- Structural performance, including resistance to stresses generated due to changes in temperature, wind, and inter story drift.

To guarantee this, two sets of tests were required. One set of tests was performed in a controlled environment, in a laboratory setting. To do this, a mockup was built and tested. A second set of tests was performed onsite, testing selected sections of the building envelope. Both sets of tests followed recognized industry standards, mostly published by the American Society for Testing Materials (ASTM), that are presented in this section.

Besides these tests, the manufacturer and installer were required to meet certain acceptance requirements. All of these requirements and QA/QC processes are presented in this section following the breakdown presented in Figure 5.2.

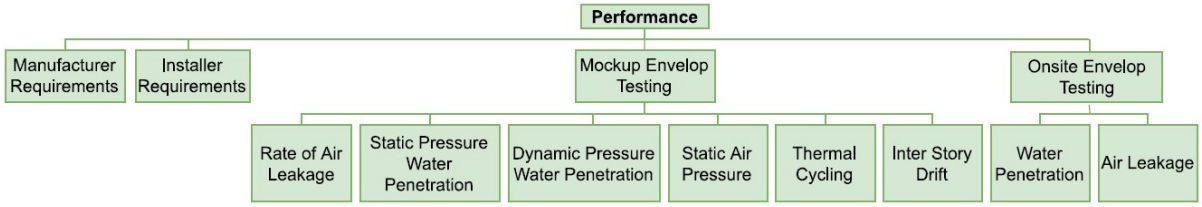

Figure 5.2. Envelope-performance QA/QC diagram

5.1.1 Manufacturer Requirements and Plant Reviews

The project specifications (project specifications, section 07 05 00) required the Envelope Contractor to have at least 10 years of relevant experience. Furthermore, it had to be prepared to prove to the consultant that it had adequate facilities and skilled personnel, being suitable for the design, engineering, detailing, and fabrication of the envelope.

As part of its roll, the Envelope Consultant carried out a series of plant reviews, inspecting the Envelope Contractor's production plant and production process. The Envelope Consultant also visited the production plant of the Glazing Subcontractor. Generally, the Envelope Consultant found the production of the envelope panels to be free from issues and in compliance with the project requirements. Whenever this was not the case, observations and recommendations were made and recorded in reports submitted to the Construction Manager. Some of these observations are summarized in Table 5.2.

Table 5.2. Observations from plant reviews

Report Number	Date	Location	Observations	Actions Required	Pictures
1	4/12/2016	Envelope Production Plant	Issues in the sealant were observed. Sealant was found to be too thin at some corners and areas, being thinner than the minimum thickness requirement of 2mm and/or leaving drywall exposed.	Update procedure followed to apply the sealant, ensuring an appropriate thickness of the sealant.	Figure 5.3
1	4/12/2016	Envelope Production Plant	Screws were found to be located within the window sill pan (flashing used for water-penetration resistance). This was expected to negatively impact the resistance of the envelope to water penetration.	Move screw to the sill angle to avoid compromising waterproofing of the window sill.	Figure 5.4
8	05/19/2016	Glazing Production Plant	Exterior glazing gaskets were found to be undersized. Undersized gaskets reduce gasket compression, increasing the potential for water penetration between the gasket and the window frame.	Gaskets required to be of the specified size.	Figure 5.5
10	4/25/2016	Envelope Production Plant	Galvanization of the anchors was found to be discontinuous and studs were not galvanized.	Cold galvanization of this elements was deemed important to prevent rusting. Anchors and studs are to be properly galvanized.	Figure 5.6
17	6/16/2016	Envelope Production Plant	Completed panels were observed to be stored outside and exposed to weather. However, visual inspection showed no signs of trapped water.	Panels are to be protected from rain during storage.	Figure 5.7

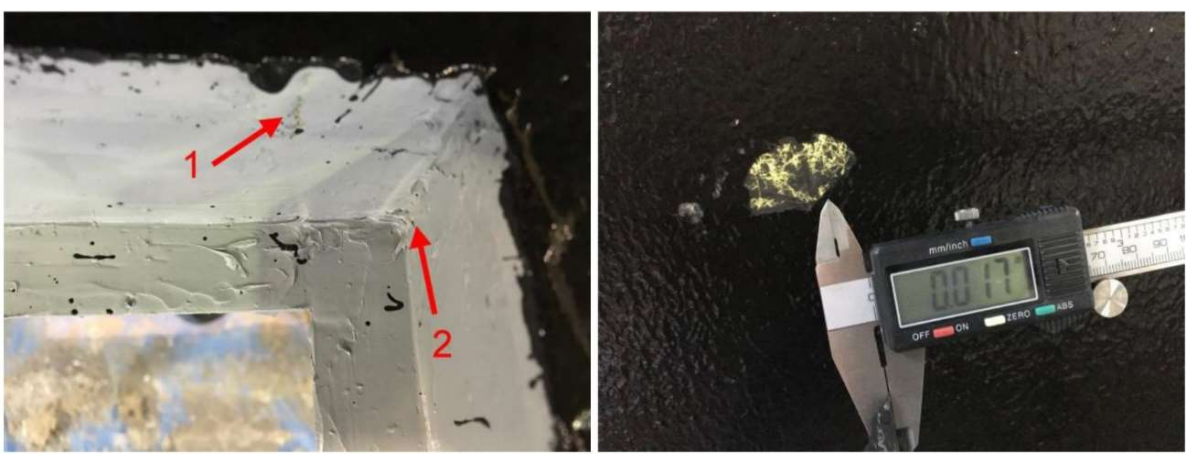

Figure 5.3. Exposed drywall and gaps observed in sealant (courtesy of Urban One Builders)

Figure 5.4. Screws placed at window sill pan (courtesy of Urban One Builders)

Figure 5.5. Observed undersized gaskets (courtesy of Urban One Builders)

Figure 5.6. Imperfect galvanization of anchors (courtesy of Urban One Builders)

Figure 5.7. Completed panels exposed to weather (courtesy of Urban One Builders)

These observations indicate that the Envelope Consultant carried out an effective role, as an independent reviewer, to assure compliance with the project requirements.

5.1.2 Installer Requirements and Site Reviews

The project specifications (project specifications, section 07 05 00) required the installation of the envelope to be carried out by experienced personnel. Installation was also required to be done in accordance with the project specifications and following the manufacturer's directions and shop drawings, which were reviewed by the Envelope Consultant. Examples of these shop drawings and the reviews made by the consultant are presented in section 3.2.1. As the Envelope Contractor also provided the installation services, potential communication or coordination errors between the manufacturer and the installer were eliminated. Additional to this, the Envelope Consultant carried out a series to site reviews, checking the quality of the installed

envelope panels and making observations and recommendations that were recorded in reports submitted to the Construction Manager. Some of these observations are summarized in Table 5.3.

Table 5.3. Observations from field reviews

Report Number	Date	Observations	Actions Required	Pictures
20	06/29/2016	Excessive movement detected at corner panels.	Install additional anchors and fasteners to secure the panels.	Figure 5.8
27	08/19/2016	Sealant joints between envelope panels and the concrete cores were missing at various locations. The sealant is needed to protect interior materials and finishes from rain.	Joints to be sealed and completed at each floor as soon as possible and before initiating the envelope installation at the next floor.	Figure 5.9
28	08/24/2016	At some locations insulation was found to not be properly fitting the stud cavities.	Ensure that insulation is installed to completely fill stud cavities.	Figure 5.10
28	08/24/2016	In some windows fastener heads were missing or damaged. This can compromise the seal between fastened pieces.	Review all windows, seal all penetrations left by damaged fasteners.	Figure 5.11

Figure 5.8. Additional anchor installed at corner panels (courtesy of Urban One Builders)

Figure 5.9. Missing sealant between envelope panel and concrete core (courtesy of Urban One Builders)

Figure 5.10. Insulation failing to fill stud cavity (courtesy of Urban One Builders)

Figure 5.11. Penetration left by damaged fastener (courtesy of Urban One Builders)

Similar to the plant reviews, these observations indicate that the Envelope Consultant served an effective role as an independent reviewer, assuring compliance with the project requirements.

The site reviews also reveal that the Envelope Contractor achieved a general high level of compliance with the project requirements, with only minor and fixable issues being observed.

5.1.3 Mockup Envelope Testing

In order to assure an appropriate performance of the prefabricated envelope, the project specifications (project specifications, section 07 05 00) required a mockup to be built in a laboratory setting. This mockup was required to include the envelope panels and to be subjected to the following tests:

- Rate of air leakage under specified pressure differences in accordance with ASTM E283.
- Water penetration by uniform static air pressure difference in accordance with ASTM E331.
- Water penetration using dynamic pressure in accordance with AAMA 501.1-17.
- Structural performance by uniform static air pressure difference in accordance with ASTM E330.
- Thermal cycling.
- Static inter story drift.

Detailed information related to each one of these tests is presented in the following sections. The majority of these tests required a similar arrangement, capable of subjecting the test specimen (envelope panels) to a differential pressure. This was done by installing the test specimen as part of an air chamber. Then, air can be supplied or exhausted, generating a specified differential pressure between the inside and outside of the chamber. A controllable air blower, exhaust fan,

or reversible blower can be used as the supply air system, as long as it can provide a constant flow of air at the required differential pressure.

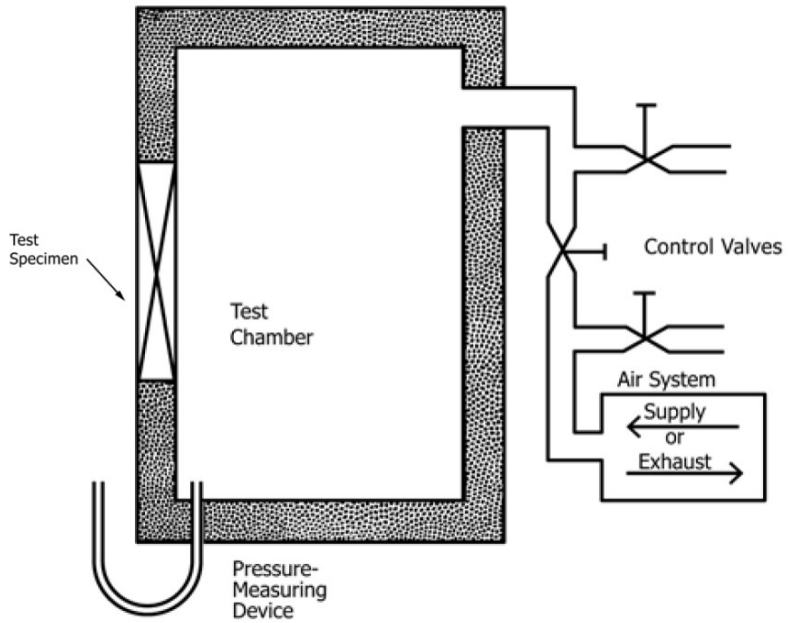

Figure 5.12. General test arrangement (ASTM, 2014)

Additionally, the standards require the test specimen to be an accurate representation of the envelope that will be installed onsite, this includes:

- All typical parts of the wall system.
- No less than two typical units, including all connections.
- The height to be no less that the full building story height or height of a complete panel, whichever is greater.
- All parts of the wall specimen shall be of full size, with the same materials, details, methods of construction, installation, and anchorage used in the building.
- Conditions of structural support shall be simulated as accurately as possible.
- During the test, the specimen shall not contain any sealing material or element that is not normally part of the assembly to be installed in the building.

Following these requirements, a mockup was built at the testing facility of the Envelope Testing Agency. The Envelope Testing Agency conducted the aforementioned tests and issued the Envelope Test Report containing all the results. A drawing showing a plant view of the mockup is presented in Figure 5.13, pictures of the installation process are presented in Figure 5.14, and a view of the final mockup is presented in Figure 5.15.

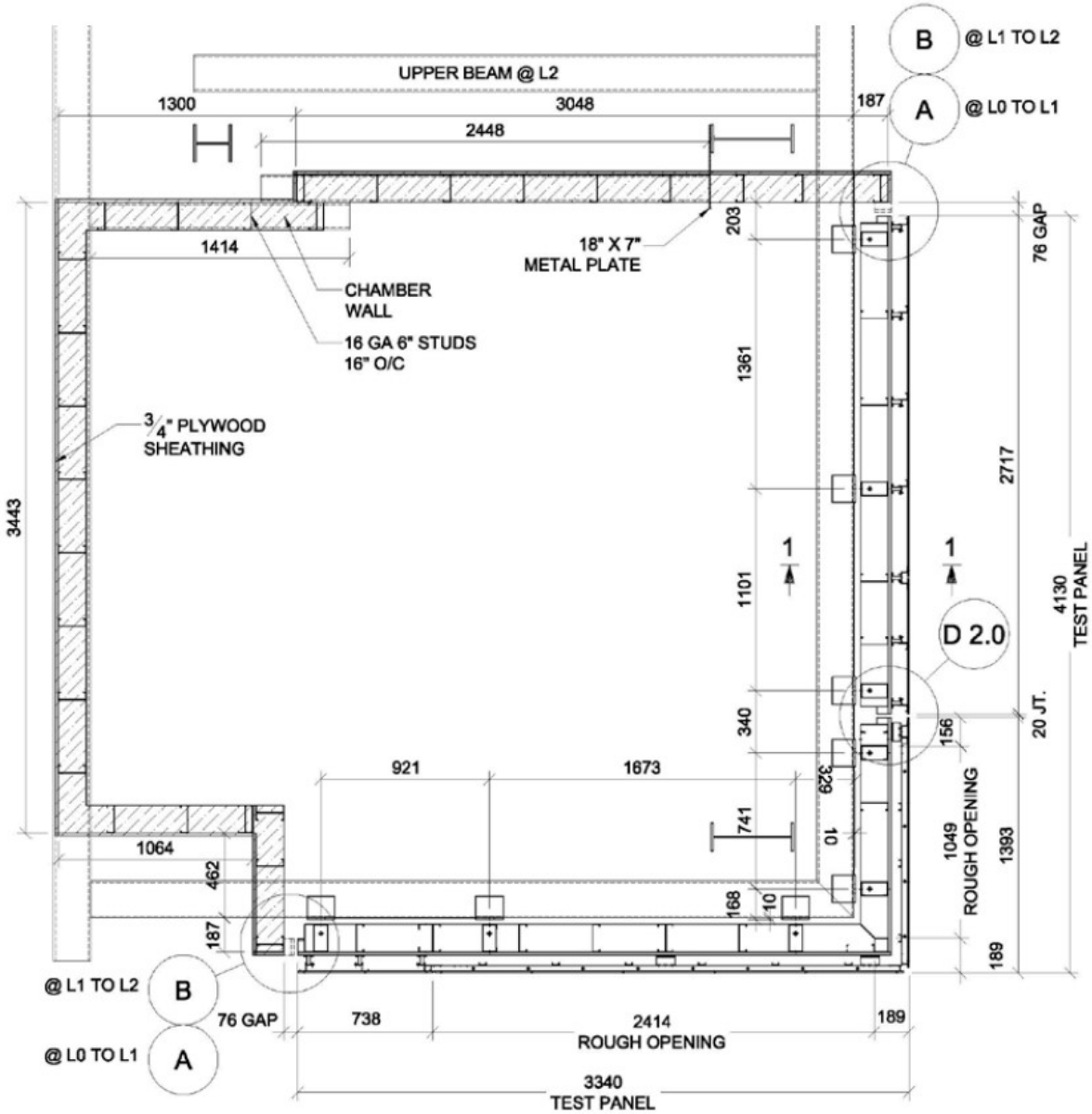

Figure 5.13. TWH mockup layout (courtesy of Centura Building Systems Ltd.)

Figure 5.14. Mockup installation (courtesy of Centura Building Systems Ltd.)

Figure 5.15. Finished mockup (courtesy of Centura Building Systems Ltd.)

the Envelope Consultant carried out a series of site visits, inspecting the mockup and overseeing the execution and results of the tests. The inspection of the envelope panels was done to confirm that they were an accurate representation of the ones installed on site and, therefore, that they complied with all the project specifications. The inspections showed a general state of compliance. Whenever discrepancies or issues were observed, they were recorded in reports and submitted to the Construction Manager. A summary of these observations is presented in Table 5.4.

Table 5.4. Observations from mockup observations

Report Number	Date	Observations	Actions Required	Pictures
3	4/26/2016	Lumber used around the perimeter of the panels is of poor quality. This can compromise the air/water sealant joint between the panels.	The joint between panels is critical for air leakage and water penetration performance. Project panels are to employ a higher grade or planed lumber to guarantee a smooth and consistent joint profile.	Figure 5.16
3	4/26/2016	Incorrect fasteners were observed a several locations. These fasteners are not in compliance with the project specifications.	All exterior exposed fasteners are required to be stainless steel. All interior exposed fasteners to be stainless steel or minimum DT2000 galvanized.	Figure 5.17
3	4/26/2016	Poor bond observed between the silicone sealant and window frame.	Review the silicone sealant compatibility and surface preparation with the sealant supplier.	Figure 5.18
3	4/26/2016	Steel studs were observed to be G60 galvanized. The project specifications require a minimum G90 galvanized. Lower grade steel can affect the structural and overall performance of the envelope.	Ensure that project panels use G90 galvanized studs as per the project specifications and shop drawings.	Figure 5.19

Figure 5.16. Poor quality lumber around panels perimeter (courtesy of Urban One Builders)

Figure 5.17. Fasteners failing to comply with the project requirements (courtesy of Urban One Builders)

Figure 5.18. Poor bond between silicon sealant and aluminum pieces (courtesy of Urban One Builders)

Figure 5.19. G60 steel studs noncompliant with project requirements (courtesy of Urban One Builders)

These observations indicate that the Envelope Consultant carried out an effective role as an independent reviewer, completing highly detailed inspections and assuring compliance with the project requirements. As a result, these inspections made the test results more reliable and prevented the occurrence of these same issues in the envelope panels installed on the building. A description and results of the tests is presented in the following sections. The complete test history, extracted from the Envelope Test Report, is presented in Appendix A.

5.1.3.1 Rate of Air Leakage Under Specified Pressure Difference

This test method is meant to determine air leakage rates through exterior windows and/or envelopes in a laboratory setting (ASTM E283). The project specifications (project specifications, section 07 05 00) required this test to be performed in compliance with ASTM E238.

This test follows the general arrangement presented in Figure 5.12. In this test, the differential pressure generated by supplying or exhausting air is meant to force leakage of air across the

specimen. The amount of infiltrated or exfiltrated air is assessed by measuring air flow across the specimen (ASTM E283). To avoid unintentional impacts on the results, it is important to prevent the air supply opening from directly impinging the specimen. As it can be seen in Figure 5.20, a diffusion baffle can be placed to avoid this issue.

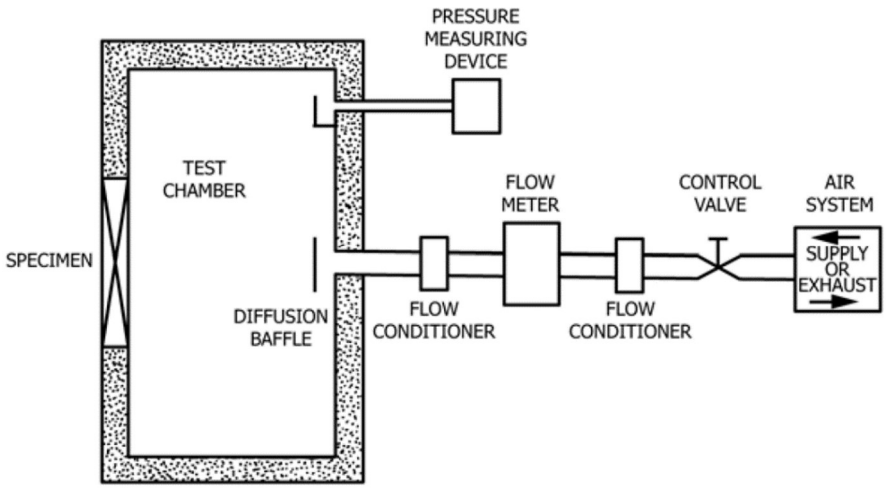

Figure 5.20. Air leakage test arrangement (ASTM, 2012)

Air leakage in the test chamber, extraneous to the specimen, must be sealed if possible. Otherwise, this leakage must be measured and subtracted from the total leakage to compute the air leakage through the test specimen (ASTM, 2012). Also, during the test, the specimen is required to be under constant temperature and humidity.

The project specification (project specifications, section 07 05 00) required infiltration and exfiltration to be below 0.03cfm/ft2 at a 6.24psf static differential pressure. This specified pressure is considerably higher than the predetermined pressure required by ASTM E283, which is just 1.57psf. The Envelope Test Report shows that the testing procedures were in complete compliance with ASTM E283. The test report also shows that this test was carried in three different occasions as presented in Table 5.5.

Table 5.5. Air leakage test results

Date	Description	Conditions	Result
5/11/2016	Tests carried after preloading the mockup to 50% of the design wing load.	Test performed in accordance with ASTM E283, using a pressure differential of 6.26psf.	Panel overall leakage of 0.01cfm/ft2. Below the specified maximum rate of 0.03cfm/ft2 (pass).
5/16/2016	Test carried after subjecting the mockup to 100% of the design wind load, and interstory drift of 6mm in lateral displacement and 16mm in vertical displacement.	Test performed in accordance with ASTM E283, using a pressure differential of 6.26psf.	Panel overall leakage of 0.01cfm/ft2. Below the specified maximum rate of 0.03cfm/ft2 (pass).
6/21/2016	Test carried after subjecting the mockup to 100% of the design wind load, an interstory drift of 6mm in lateral displacement and 16mm in vertical displacement, and a thermal cycling test.	Test performed in accordance with ASTM E283, using a pressure differential of 6.26psf.	Panel overall leakage of 0.01cfm/ft2. Below the specified maximum rate of 0.03cfm/ft2 (pass).

The rationale behind retesting after subjecting the specimen to structural tests and a thermal cycling test is to assess the impact of these loads and stresses in the air leakage performance of the envelope. As it can be seen in the test results, the structural tests had no adverse effect on the envelope air leakage performance. As a general conclusion, testing showed an appropriate air leakage performance of the envelope, complying with the project specifications.

5.1.3.2 Water Penetration by Uniform Static Air Pressure Difference

This test method is meant to determine the resistance of windows and/or an envelope to water penetration in a laboratory setting (ASTM, 2016). The project specifications (project specifications, section 07 05 00) required this test to be performed in compliance with ASTM E331. A description of this test is presented in this section.

This test follows the arrangement presented in Figure 5.21. In this test, the differential pressure generated by supplying or exhausting air is meant to force penetration of water through the test specimen. Once the specified differential pressure is reached, the specimen is sprayed with water

onto its outdoor face using a water spray grid. The water spray grid shall be placed so that it wets the complete outdoor surface of the specimen, including its upper edge (ASTM, 2016). In the case of the TWH, the outdoor face of the specimen was installed pointing towards the outside of the test chamber, requiring the generation of a negative differential pressure, and placing the water spray grid outside of the test chamber.

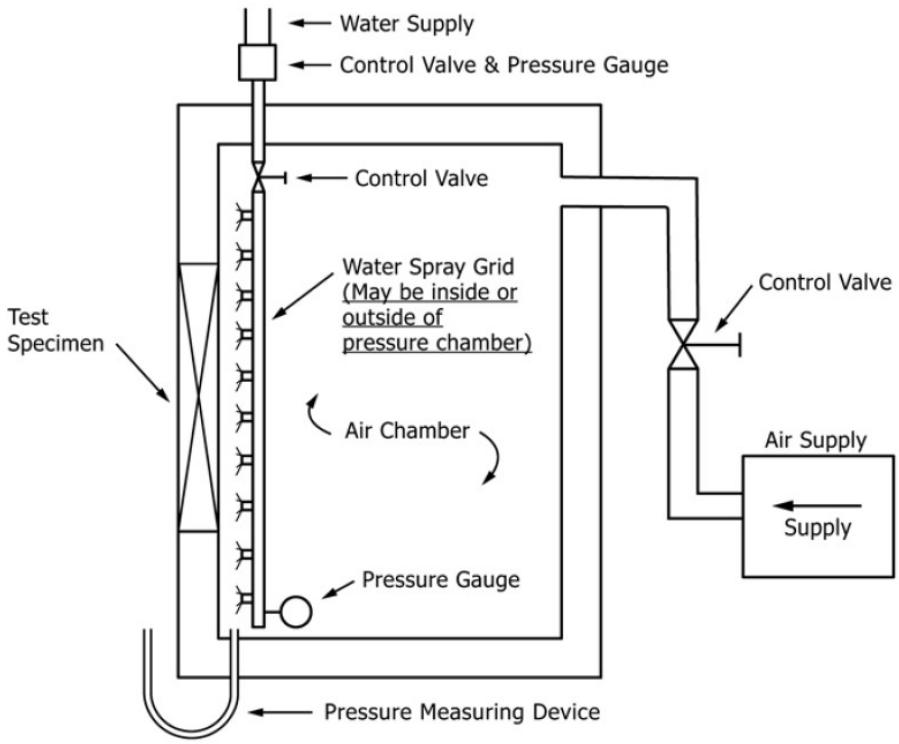

Figure 5.21. Water penetration test arrangement (ASTM, 2016)

Figure 5.22. Water spray grid used for static and dynamic pressure water penetration testing (courtesy of Centura Building Systems Ltd.)

During and after the test, the specimen was inspected to assess any infiltrations of water as per ASTM E331. ASTM E331 defines failure as water penetrating trough the envelope, passing the innermost edges of the unit frame. Retained water within the wall cavities is not considered a cause for failure according to the standard. However, ASTM E331 clarifies that water penetrating the assembly may have detrimental effects on the durability and future performance of the envelope components. Taking this into consideration, the specification of the TWH required wall cavities to be free from retained water, eliminating the risk of long term issues.

The predetermined pressure required by ASTM to perform this test is 137Pa. However, the TWH specifications require a pressure of 600Pa, significantly exceeding the ASTM requirement. Both, the TWH specifications and ASTM E331, set the time for this test to be 15 minutes. The

Envelope Test Report shows that the testing procedures were in complete compliance with ASTM E331. The test report also shows that this test was carried on five different occasions. Similar to the air leakage test, this was done to assess the impact of the structural tests and thermal cycling in the envelope performance. The results from these tests are presented in Table 5.6.

Table 5.6.Water penetration under static pressure test results

Date	Description	Conditions	Result
5/11/2016	Tests carried after preloading the mockup to 50% of the design wing load.	Test performed in accordance with ASTM 331, using a pressure differential of 600Pa for 15min.	Leakage was observed, envelope failed to comply with acceptance requirement. Envelope was re-sealed with silicone from the exterior face.
5/13/2016	Test carried directly after fixes from the last water penetration test.	Test performed in accordance with ASTM 331, using a pressure differential of 600Pa for 15min.	Leakage was observed, envelope failed to comply with acceptance requirement. A different sealing detail is to be used, requiring the panel sections to be removed and disassembled.
5/16/2016	Test carried after subjecting the mockup to 100% of the design wind load, and interstory drift of 6mm in lateral displacement and 16mm in vertical displacement.	Test performed in accordance with ASTM 331, using a pressure differential of 600Pa for 15min.	Permanent fixes had not yet been carried. Leakage was observed in the same points as the previous test, being aggravated by subjecting the envelope to structural tests. Envelope failed to comply with acceptance requirement.
5/20/2016	Test carried after a new cycle of subjecting the mockup to 100% of the design wind load, an interstory drift of 6mm in lateral displacement and 16mm in vertical displacement, and a thermal cycling test.	Test performed in accordance with ASTM 331, using a pressure differential of 600Pa for 15min.	Leakage was observed in the same points as the previous test. All other areas of the envelope passed the test.
6/21/2016	Test carried after subjecting the mockup to a thermal cycling test.	Test performed in accordance with ASTM 331, using a pressure differential of 600Pa for 15min.	No water leakage was observed, envelope passed the test.

During these tests, the Envelope Consultant played an active role overseeing, making observations and recommending solutions to the spotted issued. These observations are recorded in reports that were submitted to the Construction Manager. These observations are presented in Table 5.7.

Table 5.7. Envelope consultant observations on water penetration tests

Report Number	Date	Observations	Actions Required	Pictures
5	5/11/2016	During the test, leaks were observed at four separate locations: large leak at the window corner, small leak through a defect in the corner sealant, small leak at the joint between panels, small leak at the window head perimeter angle.	Testing was interrupted. Defects are to be corrected before retesting.	Figure 5.23
5	5/11/2016	A steady stream of water was observed, flowing from the sill into the insulation. Examination of the insulation revealed that it was saturated with water.	Modify window sill flashing, to drain water directly to the exterior.	-
6	5/13/2016	During the test, leaks were observed at four separate locations: small leak at two screw heads along the sill angle, large leak at the panel corner, small leak at the window, small leak the sill.	It was recommended to fully cover all screw holes with sealant.	Figure 5.24
7	5/16/2016	Resistance to water penetration was tested after subjecting the envelope to structural tests. This was observed to have a detrimental effect in water penetration performance, aggravating the presence of leaks. A steady flow of water was observed penetrating through the window.	Increase the size of the gaskets and modify drainage path.	Figure 5.25
9	05/21/2016	Test was carried after subjecting the envelope to structural tests. No penetration of water is reported.	-	-

Figure 5.23. Observed water penetration during test (courtesy of Urban One Builders)

Figure 5.24. Observed water penetration during test (courtesy of Urban One Builders)

Figure 5.25. Aggravated penetration of water after structural tests (courtesy of Urban One Builders)

As it can be seen, the Envelope Consultant and the Envelope Testing Agency reported similar tests results. These reports show that modifications had to be made to improve the water penetration performance of the envelope. Results from the final test reveal that the final state of the envelope was in compliance with the water penetration requirements.

5.1.3.3 Water Penetration Using Dynamic Pressure

This test method is meant to determine the resistance of windows and/or an envelope to water penetration in a laboratory setting (AAMA 501.1-17). The project specifications (project specifications, section 07 05 00) required this test to be performed in compliance with AAMA 501.1-17. AAMA 501.1-17 is a standard published by the American Architectural Manufacturers Association, describing the equipment and procedure to perform a water penetration test using dynamic pressure.

AAMA 501.1-17 requires the test arrangement to be in compliance with ASTM E331 (Figure 5.21). Specific to this test, a wind generating device (Figure 5.26) is used to generate a wind stream. This wind stream is applied perpendicular to the outside face of the test specimen, generating an equivalent dynamic pressure that is calculated using Ensewiler formula:

$P = 0.613V^2$ in SI units.

Where P is the required test pressure in pascals (Pa) and V the wind velocity in m/s. This dynamic pressure is applied along with water, being sprayed at a nominal rate 3.4 L/m^2•min. When performing this test, it is required to ensure that the static pressure differential between the test chamber and the exterior is equal to 0Pa ± 2Pa. During and after the test, the specimen is inspected to assess any infiltrations of water. Both, the TWH specifications and AAMA 501.1-17, require the time for this test to be 15 minutes.

Figure 5.26. Sample Intertek's wind generators

In the TWH, the required equivalent pressure was 600Pa. The Envelope Test Report indicates that this pressure was generated by applying a wind velocity of 110kph (30.55m/s) at the outside face of the envelope. According to the Ensewiler Formula, this wind velocity is a good approximation, but corresponds to a slightly lower pressure of 572Pa. Besides this observation, the Envelope Test Report shows that the test was in complete compliance with AAMA 501.1-17. The test report also shows that this test was carried out one time, right after the second static pressure water penetration test. The results from this test are presented in Table 5.8.

Table 5.8. Water penetration using dynamic pressure test results

Date	Description	Conditions	Result
5/13/2016	Tests carried after preloading the mockup to 50% of the design wing load.	Test performed in accordance with AAMA 501.1-17, using a wind speed of 110kph for 15min.	No leakage was observed. Pass.

The envelope passed this test right after failing to pass a static pressure water penetration test. Therefore, it was concluded that the static pressure test provided a more critical condition. As a result, only the static pressure test was carried in future occasions.

5.1.3.4 Structural Performance by Uniform Static Air Pressure Difference

This test is meant to determine the structural performance of an envelope under a uniform static pressure, meant to simulate the effects of wind loads on the exterior surface of a building (ASTM E330). The project specifications (project specifications, section 07 05 00) required this test to be performed in compliance with Procedure A of ASTM E330.

This test follows the general arrangement presented in Figure 5.12. The test chamber is pressurized, reaching the specified differential pressures, which are meant to simulate the stresses generated by wind loads. The specimen is then inspected for signs of distress or failure, and the deflection is recorded. In Table 5.9, ASTM E330 requirements and testing sequence are compared to the TWH test conditions presented in the Envelope Test Report.

Table 5.9. ASTM E330 vs TWH testing sequence

Step	ASTM E330	TWH	Comparison
1	Apply a preload equal to 50% of the test load for 10 seconds.	Apply a preload equal to 50% of the test load for 60 seconds.	TWH exceeds ASTM requirements.
2	Release the load and allow the specimen to recover for one to five minutes. Look for any sign of premature failure or residual deformations.	Release the load and allow the specimen to recover for one minute. Look for any sign of premature failure or residual deformations.	TWH allows the lowest possible recovery time.
3	Zero-out the deflection measuring device.	Zero-out the deflection measuring device.	-
4	Apply the test load for a period of 10 seconds, unless otherwise specified.	Apply the test load (1916Pa) for a period of 60 seconds.	TWH exceeds ASTM requirements.
5	Record deflection readings.	Record deflection readings.	-
6	Release the load and allow the specimen to recover for one to five minutes. Look for any sign of premature failure or residual deformations.	Release the load and allow the specimen to recover for one minute. Look for any sign of premature failure or residual deformations.	TWH allows the lowest possible recovery time.
7	Apply a preload in the opposite direction, equal to 50% of the test load for 10 seconds.	Apply a preload in the opposite direction, equal to 50% of the test load for 60 seconds.	TWH exceeds ASTM requirements.
8	Release the load and allow the specimen to recover for one to five minutes. Look for any sign of premature failure or residual deformations.	Release the load and allow the specimen to recover for one minute. Look for any sign of premature failure or residual deformations.	TWH allows the lowest possible recovery time.
9	Zero-out the deflection measuring device.	Zero-out the deflection measuring device.	-
10	Load the specimen in the opposite direction up to 100% of the test load for a period of 10 seconds, unless otherwise specified.	Load the specimen in the opposite direction up to 100% of the test load (-1916Pa) for a period of 60 seconds.	TWH exceeds ASTM requirements.
11	Record deflection readings.	Record deflection readings.	-
12	Release the load and allow the specimen to recover for one to five minutes. Look for any sign of premature failure or residual deformations.	Release the load and allow the specimen to recover for one minute. Look for any sign of premature failure or residual deformations.	TWH allows the lowest possible recovery time.

As it can be seen, a conservative approach was taken in the TWH test, where the testing sequence complies or exceeds ASTM E330 requirements. This test was completed four times. The general results from these tests is presented in Table 5.10.

Table 5.10. Structural performance by uniform static air pressure difference test results

Date	Description	Conditions	Result
5/13/2016	Tests carried by applying 100% of the design loads (+1916 Pa / -1916 Pa). Deflections were recorded by eleven deflection gauges. The readings are presented in Table 5.11.	Test performed in accordance and/or exceeding ASTM E330 requirements as presented in Table 5.11.	All deflections were within acceptable limits, no permanent deformations or signs of failure were observed. Pass.
05/20/2016	Tests carried by applying 100% of the design loads (+1916 Pa / -1916 Pa). Deflections were not recorded.	Test performed in accordance and/or exceeding ASTM E330 requirements as presented in Table 5.11.	No permanent deformations or signs of failure were observed. Pass.
06/21/2016	Tests carried by applying 100% of the design loads (+1916 Pa / -1916 Pa). Deflections were not recorded.	Test performed in accordance and/or exceeding ASTM E330 requirements as presented in Table 5.11.	No permanent deformations or signs of failure were observed. Pass.
06/21/2016	Tests carried by applying 150% of the design loads (+2874 Pa / -2874Pa). Deflections were not recorded.	Test performed in accordance and/or exceeding ASTM E330 requirements as presented in Table 5.11.	No permanent deformations or signs of failure were observed. Pass.

As it can be seen in Table 5.10, deflections were only recorded the first time the test was performed. This is because the envelope had already been observed to properly perform under test loads. Subsequent tests were carried with the intention of loading the envelope before testing for water penetration, air leakage, and interstory drift. However, the envelope was still inspected for signs of permanent deflections or failure after each of these tests. In all cases, the envelope was seen to properly withstand the test loads.

To record the deflections, the Envelope Testing Agency employed 11 deflection gauges. These gauges recorded the deflections of the specimen after the 100% of the test load was applied in each direction (steps 5 and 11 of Table 5.9), and the residual deflection after the recovery periods (steps 6 and 12 of Table 5.9). The results from these readings are presented in the Table 5.11.

Table 5.11. Deflections readings during uniform static air pressure difference test

Test Pressures Pos: +1916 Pa (+40.0 psf) Neg: -1916 Pa (-40.0 psf)						
Gauge Number	**Location**	**Wind Load Direction**	**Load Deflection, mm**	**Residual Deflection, mm**	**Allowable Deflection**	**Pass/Fail**
1, 2, 3	Awning (1st floor)	Positive	1.00	0.27	L = 1285 mm L/175 = 7.34 mm	Pass
		Negative	1.40	0.11		
4,5,6	Vertical Mullion (1st floor, south wall, in relation to the drawing, between larger fixed)	Positive	8.93	0.51	L = 1865 mm L/175 = 10.66 mm	Pass
		Negative	8.56	0.64		
7	Center of fixed (1st floor, east wall)	Positive	12.06	0.57	N/A	Info Only
		Negative	11.88	0.66		
8	Center of Wall Panel Joint (1st floor, east wall, gauges on the wall panel only side)	Positive	4.83	0.21	N/A	Info Only
		Negative	6.59	0.11		
9	Center of Corner Window Mullion (1st floor)	Positive	0.91	0.02	L = 1865 mm L/175 = 10.66 mm	Pass
		Negative	1.72	0.03		
10	Center of Wall Panel Area (1st floor, mid-span on stud)	Positive	4.68	0.20	N/A	Info Only
		Negative	3.56	0.22		
11	Center of Wall Panel Area (1st floor, center of cavity next to Gauge #10)	Positive	5.43	0.38	N/A	Info Only
		Negative	4.78	0.32		

As it can be seen, all deflections were within the allowable limits. The Envelope Testing Agency also reported that visual inspections showed no signs of issues in the specimen.

5.1.3.5 Thermal Cycling

This test method is meant to determine the effects of thermal cycling on large exterior walls in a laboratory setting (AAMA 501.5-07). To do this, a test specimen is heated and cooled to match the expected extreme site conditions. The effects are assessed by carrying a visual inspection and performing an air leakage and water penetration tests before and after subjecting the envelope to

the thermal cycles. The project specifications (project specifications, section 07 05 00) required the mockup to be subjected to this test. Although a standard related to this test is not mentioned in the project specifications, the Envelope Test Report indicates that the test followed the standard AAMA 501.5-07.

AAMA 501.5-07 explains that to perform this test, a test chamber similar to the one presented in Figure 5.12 shall be assembled, with the exception that a system to pressurize the chamber is not required. The outdoor of the test specimen is enclosed with an insulated chamber, equipped to increase and decrease exterior air temperatures. The inside of the test chamber is equipped with means to control and monitor relative humidity and temperature. A view of the insulted chamber assembled at the Envelope Testing Agency facilities can be seen in Figure 5.27. The chamber employed an industrial freezer and two propane blast heaters to reach the required cold and hot temperatures.

Figure 5.27. Thermal cycling test arrangement/insulated chamber (courtesy of Centura Building Systems Ltd.)

AAMA 501.5-07 requires the generated outside air temperatures to match the expected extreme job conditions. In the case of the TWH, this meant cooling the outside air to a temperature of

-18°C and heating it up to 60°C. Additionally, the inside air temperature and relative humidity must also match the expected service values. In the case of the TWH, indoor air temperature was set at 21°C, with a relative humidity of 45%. To perform this test, the following process was required:

- Evaluate air leakage in accordance with ASTM E283.
- Evaluate water penetration in accordance with ASTM 331.
- Adjust inside temperature and relative humidity to the required values (21°C and 45%).
- Adjust outside air temperature to match indoor air temperature (21°C).
- In one hour, increase outside air temperature to extreme test value (60°C). Maintain conditions for two hours.
- In one hour, decrease outside air temperature to match indoor air temperature (21°C).
- In one hour, decrease outside air temperature to extreme test value (-18°C). Maintain conditions for two hours.
- In one hour, increase outside air temperature to match indoor air temperature (21°C).
- Repeat heating and cooling cycle a minimum of three times.
- Carry a visual inspection of the envelope.
- Evaluate air leakage in accordance with ASTM E283.
- Evaluate water penetration in accordance with ASTM 331.

The TWH exceeded AAMA 501.5-07 minimum requirement by performing five thermal cycles instead of three. The carried visual inspections did not reveal any signs of damages.

Additionally, air leakage and water penetrations tests carried before and after the thermal cycles indicate that the envelope's performance was unaffected.

5.1.3.6 Static Inter Story Drift

This test method is meant to simulate the effects of an earthquake or an intense wind event and its effects on a building envelope in a laboratory setting (AAMA 501.4-09). The project specifications (project specifications, section 07 05 00) required the mockup to be subjected to this test. Although a standard related to this test is not mentioned in the project specifications, the Envelope Test Report indicates that the test followed AAMA 501.4-09.

AMMA 501.4-09 explains that to perform this test, a test chamber similar to the one presented in Figure 5.12 shall be assembled, with the exception that a system to pressurize the chamber is not required. AAMA 501.4-09 also requires the test specimen to be an accurate representation of the envelope to be installed onsite, as described in section 3.1.3. Additionally, this test requires the main structural elements of the mockup to accurately simulate the ones used on the actual building. The test is then performed by generating an inter story displacement (drift), equal to the highest expected displacement in a seismic or extreme wind event. The general configuration of this test can be seen in Figure 5.28.

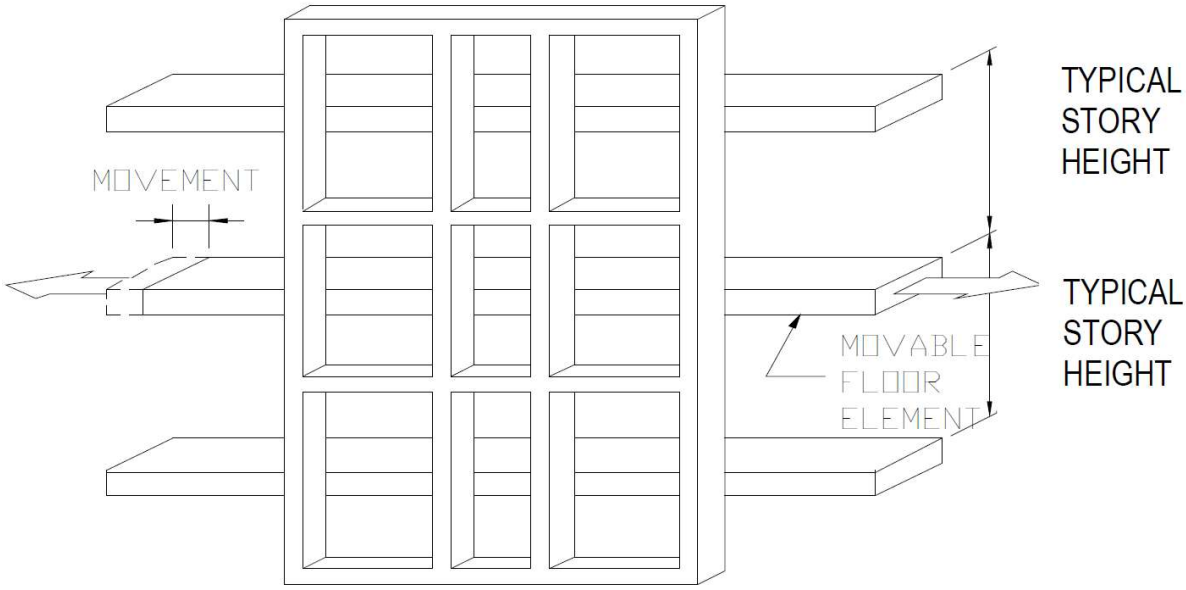

Figure 5.28. Static inter story drift test arrangement (AAMA, 2009)

In the case of the TWH, the displacements were generated using a two-way hydraulic system. Complying with AAMA 501.4-09 requirements, the process followed to perform this test was:

- Generate required displacement.
- Maintain displacement for 10 seconds.
- Release.
- Repeat sequence a total of three times.

This test was carried out a total of five times, using different displacement values. The results from these tests are presented in Table 5.12.

Table 5.12. Static inter story drift test results

Date	Description	Conditions	Result
05/13/2016	Test performed after subjecting the mockup to 100% of the design wind load.	Test performed in accordance with AAMA 501.4-09 generating a lateral displacement of 6mm.	No permanent deformations or structural distresses were observed. Pass.
05/13/2016	Test performed after subjecting the mockup to 100% of the design wind load and an inter story drift of 6mm in lateral displacement.	Test performed in accordance with AAMA 501.4-09 generating a vertical displacement of 16mm.	No permanent deformations or structural distresses were observed. Pass.
05/20/2016	Test performed after subjecting the mockup to 100% of the design wind load.	Test performed in accordance with AAMA 501.4-09 generating a lateral displacement of 6mm.	No permanent deformations or structural distresses were observed. Pass.
05/20/2016	Test performed after subjecting the mockup to 100% of the design wind load and an inter story drift of 6mm in lateral displacement.	Test performed in accordance with AAMA 501.4-09 generating a vertical displacement of 16mm.	No permanent deformations or structural distresses were observed. Pass.
06/21/2016	Test performed after subjecting the mockup to 150% of the design wind load.	Test performed in accordance with AAMA 501.4-09 generating a lateral displacement of 70mm.	Movement of the upper panel was observed during the test. The cause was observed to be a loose bolt. After releasing the load there were no signs of permanent deformations or structural distresses. Pass.

As it can be seen in Table 5.12, the envelope showed an appropriate performance when subjected to the highest expected displacements generated by seismic or severe wind events. Similar to the structural performance in the uniform static air pressure difference test, this test was carried out more than once to subject the envelope to a combination of different scenarios before retesting for air leakage and water penetration. As discussed in section 3.1.3.2, subjecting the envelope to structural tests aggravated the penetration of water recorded on May 16th. However, the final state of the envelope fully complied with all performance requirements. The complete test history can be seen in Appendix A.

5.1.4 Onsite Envelope Testing

In order to assure an appropriate performance of the prefabricated envelope, the project specifications (project specifications, section 07 05 00) required a set of tests to be performed onsite. The following tests were required:

- Field determination of water penetration in accordance with ASTM E1105.
- Air leakage site detection in accordance with ASTM E1186.
- Field measurement of air leakage in accordance with ASTM E783.
- Air leakage by fan pressurization in accordance with ASTM E779.

The Envelope Consultant, was the party in charge of performing these tests. The results and observations were captured in a series of site reports that were delivered to the Construction Manager. A description of these tests and the obtained results are presented in this section.

5.1.4.1 Field Determination of Water Penetration

This test is meant to evaluate three different aspects of an envelope:

- Resistance the envelope's surface to water penetration.
- Resistance to water penetrations through the joints between envelope panels.
- Resistance to water penetrations through the joints between the envelope and the adjacent construction (ASTM E1105).

The project specifications (project specifications, section 07 05 00) required this test to be performed in accordance with ASTM E1105. The site reports made by the Envelope Consultant confirmed that the test was carried in compliance with ASTM E1105.

To perform this test, a section of the envelope is enclosed in a sealing chamber, leaving an inlet to supply or exhaust air in order to generate and maintain a specified differential pressure. A spraying water grid is used to wet the exterior of the envelope. Then, the generated differential pressure forces water through the envelope. The general arrangement of this test can be seen in Figure 5.29.

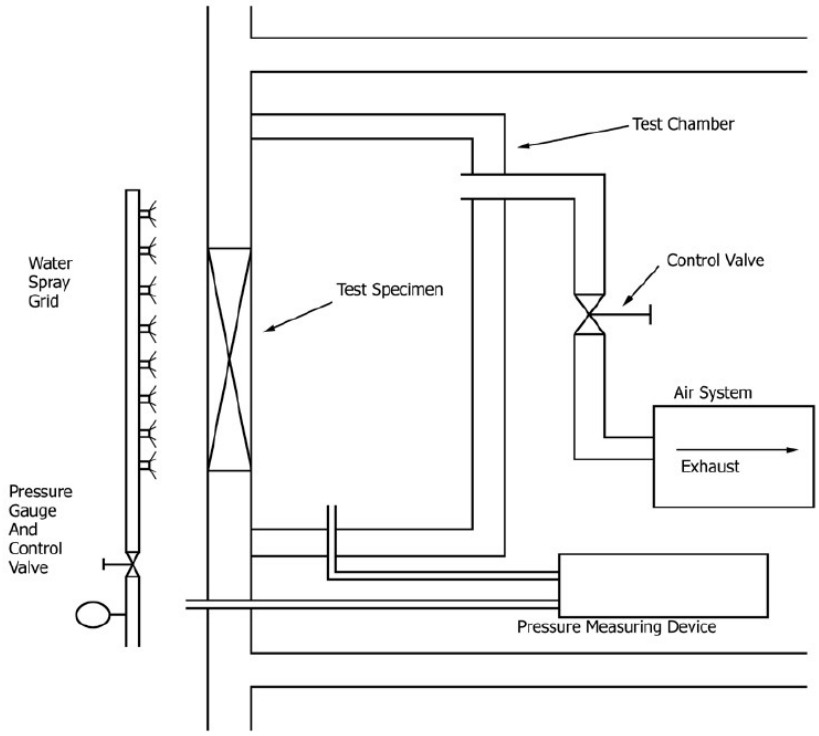

Figure 5.29. Field determination of water penetration test general arrangement (ASTM, 2015)

The test was required to be performed in three different locations, requiring the erection of three different sealing chambers. The erection of the chambers was done under the supervision of the Construction Manager. As part of its services, the Envelope Consultant reviewed the chambers, assessing their suitability to perform the test. The first chamber was erected on the 3rd floor and was reviewed by the Envelope Consultant on August 10th, 2016. Table 5.13 summarizes the observations that were made.

Table 5.13. Envelope consultant observations on the 3rd floor sealing chamber

Report Number	Date	Observations	Actions Required	Pictures
26	8/10/2016	Imperfect seal at the corners of the chamber.	Imperfect seals can compromise the equipment's ability to pressurize the chamber. Seal or fire tape areas.	Figure 5.30
26	8/10/2016	Imperfect seal between ceiling and gypsum board.	Imperfect seals can compromise the equipment's ability to pressurize the chamber. Seal or fire tape areas.	Figure 5.31
26	8/10/2016	Imperfect seal between wood to metal framing on the panel.	Imperfect seals can compromise the equipment's ability to pressurize the chamber. Seal or fire tape areas.	Figure 5.32

Figure 5.30. Imperfect seals at corners of sealing chamber (courtesy of Urban One Builders)

Figure 5.31. Imperfect seals between ceiling and gypsum board (courtesy of Urban One Builders)

Figure 5.32. Imperfect seals between wood to metal framing (courtesy of Urban One Builders)

No observations were made on the other two sealing chambers. The results from the carried tests indicate that the sealing chambers worked properly, allowing the testing pressure to be reached. The Envelope Consultant reported that the test was performed following procedure A and procedure B of ASTM 1105, as follow:

- Procedure A:
    - Pressurize the chamber, reaching the required test pressure (700 Pa).
    - Maintain test pressure for 15min while continuously spraying the exterior of the envelope.
    - Visually inspect signs of water penetration.
- Procedure B:
    - Pressurize the chamber, reaching the required test pressure (700 Pa).
    - Maintain test pressure for 5min while continuously spraying the exterior of the envelope.

- Release test pressure, reducing it to zero, while continuously spraying the exterior of the envelope.
- Maintain depressurized condition for one minute while continuously spraying the exterior of the envelope.
- Repeat cycle a total of three times.
- Visually inspect signs of water penetration.

Similar to the water penetration by uniform static air pressure difference test carried out in the mockup, failure was defined as water penetrating through the outermost layer of the envelope or water being entrapped in the envelope assembly. This exceed the requirements of ASTM E1105, that only requires water to be kept from penetrating through the outermost layer of the envelope. This additional requirement was set to guarantee the long-term performance of the envelope, since entrapped water can have detrimental effects of the sealant and other materials.

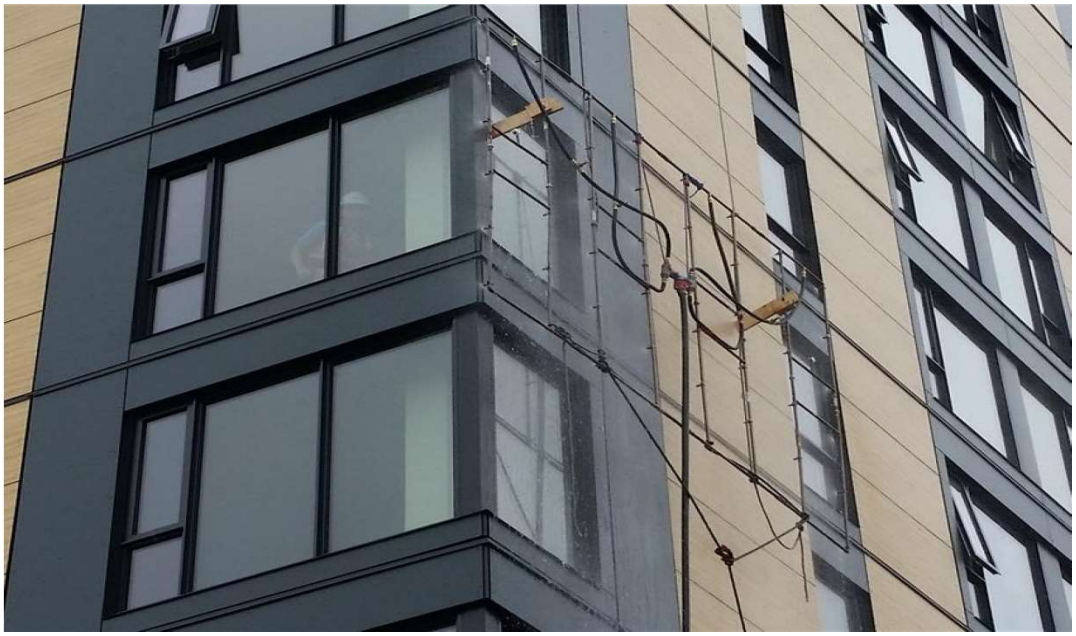

Figure 5.33. Water spray grid during 3rd floor test (courtesy of Urban One Builders)

Figure 5.34. Sealing chamber and pressurizing fan

The test results are presented in Table 5.14.

Table 5.14. Field determination of water penetration test results

Report Number	Date	Test Result	Actions Required	Pictures
27	8/19/2016	Test completed with no water leaks observed. Pass.	-	-
31	9/16/2016	Test completed with no water leaks observed. Pass.	-	-
36	10/18/2016	Water penetrating through the corner of the interior gasket of the operable window. Failure.	Shop drawings indicate that three notches are to be installed in the outer sill gasket. Reviewed window only had one. This was determined to be the cause of failure. Glazing Subcontractor to review the outer sill gaskets of all operable windows and assure that they comply with shop drawings.	Figure 5.35

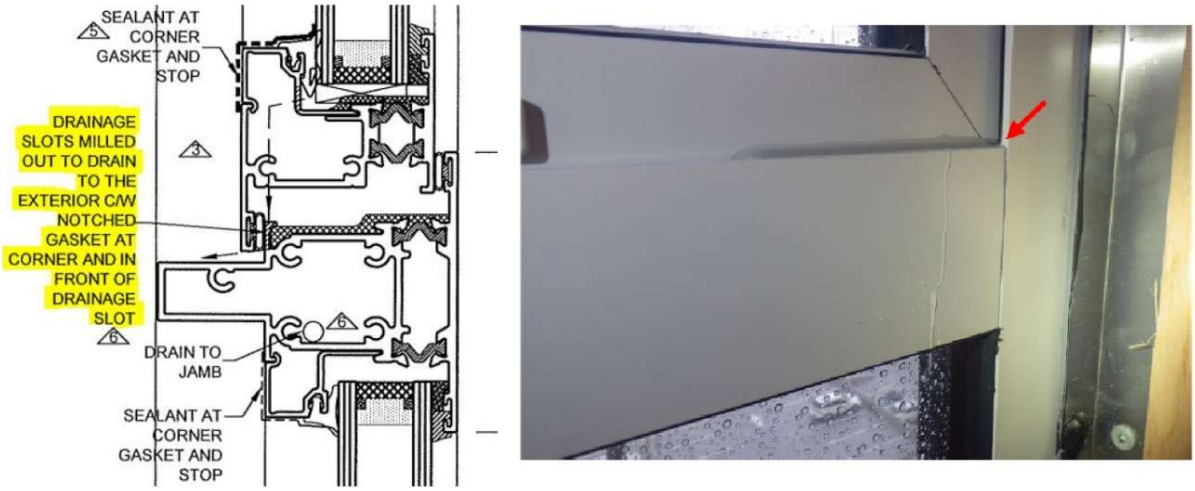

Figure 5.35. Shop drawing indicating missing notches / observed water penetrating through the envelope (courtesy of Urban One Builders)

As it can be implied from the test results, the designed envelope complied with the water penetration requirements of the project. The observed cause of failure corresponded to noncompliance with shop drawings. As a conclusion, conducting this field test helped to spot potential issues and correct them before the beginning of occupancy.

5.1.4.2 Air Leakage Site Detection

This test is meant to detect points allowing infiltration or exfiltration of air in a building envelope (ASTM E1186). The project specifications (project specifications, section 07 05 00) required this test to be performed in accordance with ASTM E1186. The site reports made by the Envelope Consultant confirmed that the test was carried in compliance with ASTM E1186. The procedure and results of this test are presented in this section.

ASTM E1186 presents seven different practices to detect air leakage sites in an envelope. From these seven, the TWH specifications required a combined pressurization and infrared scanning to be performed. However, the actual practice that was employed onsite is the one described as

building pressurization and theatrical fog. For the purposes of this thesis, only the employed practice will be described. However, ASTM E1186 describes a pressurization and theatrical fog as a more time consuming, but a more accurate and reliable, practice than a pressurization and infrared scanning.

To perform this test, ASTM E1186 requires a test chamber to be assembled with the same characteristics as the chamber utilized to perform a field determination of water penetration (Figure 5.29). In the TWH test, the same chambers were utilized and this test was performed a total of three times (once in each chamber). Generally, the test is performed by pressurizing the test chamber and releasing theatrical smoke. Then, the pressure forces the gas through the envelope (ASTM E1186). By visually inspecting the outside face of the envelope, the leakage sites can be observed. A view of the gas exfiltrating through the envelope can be seen in Figure 5.36.

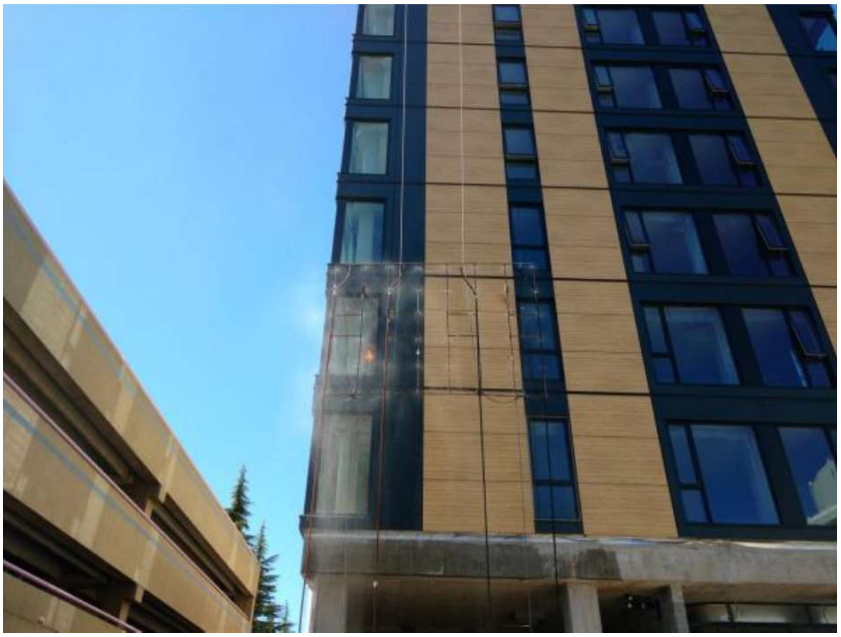

Figure 5.36. Exfiltrated gas during first air leakage site detection test (courtesy of Urban One Builders)

The results from these tests were recorded by the Envelope Consultant in their site reports and were submitted to the Construction Manager. The results are summarized in Table 5.15.

Table 5.15. Air leakage site detection test results

Report Number	Date	Test Result	Actions Required	Pictures
27	8/19/2016	Significant amount of smoke being exfiltrated. The cause was identified as gaps in the sealant at the horizontal panel joint.	Envelope Contractor to review all vertical and horizontal sealant joints and repair discontinuities as required.	Figure 5.36
31	9/16/2016	No leakage of gas smoke was observed.	-	-
36	10/18/2016	No leakage of gas smoke was observed.	-	-

As it can be seen in Table 5.15, after the cause of initial failure was identified and fixed, the envelope had an appropriate air leakage performance. Similar to the field determination of the water penetration test, it can be concluded that conducting this field test helped to spot potential issues and correct them before the beginning of occupancy.

5.2 Constructability

This section presents the QA/QC practices that were put in place to guarantee an adequate constructability of the envelope. A breakdown of this section is presented in Figure 5.37.

Figure 5.37. Envelope-Constructability QA/QC Diagram

5.2.1 QA/QC Logs

To track the state of the panels during manufacture, transportation, and installation, the project specifications (project specifications, section 07 05 00) required the manufacturer and installer of the envelope panels to keep QA/QC logs of these processes and submit them to the Construction Manager. These documents also served as a tool to record compliance with the project specifications. These logs included:

- Environmental conditions at all stages: fabrications, storage, transportation, and erection.
- The actual length and width of the panels.
- A log recording the state of the elements upon arrival to the construction site, taking note of all damaged and/or missing materials and elements.
- Installation logs, including equipment used such as torque drills and compliance with erection requirements.
- Log of any changes or modifications.
- Pictures.

The Envelope Contractor confirmed that these logs were kept and that they were in accordance with the project specifications. The Envelope Contractor also mentioned that this type of document is a common step of their production process.

5.2.2 Shop Drawings

The project specifications (project specifications, section 07 05 00) required the Envelope Contractor to develop and submit shop drawings to be reviewed by the Envelope Consultant. The drawings were required to include all pertinent information related to the envelope panels,

including details of the window walls, cladding and air/vapor barriers, the materials, welding, bonding, methods of joining, the joint locations, the type, thicknesses and finish of materials, the methods of anchoring, the sizes of anchorages, the types of sealants, gaskets, insulation, the expansion and contraction locations and details, the thermal break locations and details, the glazing details and glazing methods, the drainage details, the provision for expansion and contraction, and the details of other pertinent components of the work.

These shop drawings were submitted and reviewed as per the project specifications. Samples of the reviews and implemented observations are presented in Figure 5.38, Figure 5.39, Figure 5.40 and Figure 5.41.

FRAMING:

Provide gauge info

- TRUCKS — TOP AND BOTTOM 600T200-54 G90 (AS MEASURED); HEADER AND SILL 600T200-43 G90 (AS MEASURED)
- STUDS — TYP.WALL STUD 600S162-43 G90 (AS MEASURED); END STUD 600S200-54 G90 (AS MEASURED); JAMB STUD 600S300-54 G90 (AS MEASURED)

FASTENERS:

- #10-16 DT200 SCREWS

DT2000

HARDWARE

- ALL HARDWARE COATED WITH CLOVAZINC-1 OR ORGANIC ZINC RICH PRIMER 79% SOLID CONTENT
  - M1 6mm BENT PLATE WITH HSS 38x38x3mm and 16mm GALV. NUT
  - M2 HSS152x152x6 WITH HSS 38x38x3mm,16mm GALV. NUT AND 3mm PLATE
- H1 PL 76x152x10 WITH HSS 38x38x3mm - PRIME PAINTED
- H2 5mm PLATE WASHER - PRIME PAINTED
- H3 20mm HORSE SHOE PLATE
- B1 19x89mm A325 GALV.BOLT WITH WASHER

ELEMAX 5000?
(e.g behind Cascadia clips and at details
add in silicone transition strip here or below too?

SHEATHING:

- 16mm DENSGLASS GOLD

FASTENERS:

- #10 SCREWS WITH GRABBERGUARD COATING

MEMBRANE:

- TYP. GE ELEMAX 2600 LIQUID APPLIED MEMBRANE
- PANEL EDGES AND TRIMS - GE ELEMAX 2600 LIQUID APPLIED MEMBRANE C/W FABRIC

INSULATION:

- 2" ROXUL CAVITYROCK INSULATION

CASCADIA CLIPS:

- 2" HORIZONTAL CASCADIA CLIP

FASTENERS:

DT2000 coating

- $\frac{1}{4}$" -14 x 4" SCREW MASTER DRILLER

FURRING:

Furring/Girts

- 18GA 50 KSI AZ150 GALVALUME "Z" BARS
- 18GA 50 KSI AZ150 GALVALUME HAT CHANNELS

FASTENERS:

- #10 - 16 DT 2000

FLASHING:

galvalume/galvanized

- 24ga BLACK CASCADIA PREMIUM

FASTENERS:

- EXPOSED #10-16 STAINLESS STEEL

WINDOWS:

- WINDOWS SUPPLIED BY PHOENIX GLASS INC.
- INTERNAL SEALANT GE ELEMAX 5000 GRAY
- EXTERNAL SEALANT GE ELEMAX 5000 BLACK

FASTENERS:

- #10-16 DT200 SCREWS

DT2000

TRESPA PANELS:

- SUPPLIED BY URBAN ONE BUILDERS

FASTENERS:

- SS SCREWS SUPPLIED BY URBAN ONE BUILDERS

FIELD SEALANT:

- GE ELEMAX 5000

include brand/model name

include spec, stainless steel type ___

COMPANY: CENTURA BUILDING SYSTEMS LTD.
460 FRASERVIEW [illegible]A, BC V3M 6H4
TEL: (604) 522[illegible] [illegible]4) 522-1604

others?

PROJECT: - Student Residence at Brock Commons
University of British Columbia, Vancouver

TITLE: PANEL MATERIAL SPECS

REFERENCE	CHECK	DRAFT	SCALE	REVISION COMMENT	DATE	REV.	
		SM	-	-	JUNE/2016	E	D0

Figure 5.38. Material specifications – review (courtesy of Urban One Builders)

FRAMING:

- TRUCKS — TOP AND BOTTOM 600T200-54 G90 (AS MEASURED) - 16ga; HEADER AND SILL 600T200-43 G90 (AS MEASURED) - 18ga
- STUDS — TYP.WALL STUD 600S162-43 G90 (AS MEASURED) - 18ga; END STUD 600S200-54 G90 (AS MEASURED) - 16ga; JAMB STUD 600S300-54 G90 (AS MEASURED) - 16ga

FASTENERS:

- #10-16 DT2000 SCREWS

HARDWARE

- ALL HARDWARE COATED WITH CLOVAZINC-1 OR ORGANIC ZINC RICH PRIMER 79% SOLID CONTENT
  - M1 6mm BENT PLATE WITH HSS 38x38x3mm and 16mm GALV. NUT
  - M2 HSS152x152x6 WITH HSS 38x38x3mm,16mm GALV. NUT AND 3mm PLATE
- H1 PL 76x152x10 WITH HSS 38x38x3mm - PRIME PAINTED
- H2 5mm PLATE WASHER - PRIME PAINTED
- H3 20mm HORSE SHOE PLATE
- B1 19x89mm A325 GALV.BOLT WITH WASHER

SHEATHING:

- 16mm DENSGLASS GOLD

FASTENERS:

- #10 SCREWS WITH GRABBERGUARD COATING

MEMBRANE:

- GE ELEMAX 2600 LIQUID APPLIED MEMBRANE
- USE REINFORCING FABRIC AT ALL SHEATHING JOINTS, WINDOW ROUGH OPENING, PANEL EDGES, CORNER POSTS
- APPLY ELEMAX 5000 AT ALL SHEATHING SCREWS
- APPLY ELEMAX 5000 BEHIND ALL CASCADIA CLIPS

INSULATION:

- 2" ROXUL CAVITYROCK INSULATION

CASCADIA CLIPS:

- 2" HORIZONTAL CASCADIA CLIP

FASTENERS:

- $\frac{1}{4}$" -14 x 4" SCREW DT2000 COATING (PROVIDED BY CASCADIA)

FURRING / GIRTS:

- 18GA 50 KSI AZ150 GALVALUME "Z" BARS
- 18GA 50 KSI AZ150 GALVALUME HAT CHANNELS

FASTENERS:

- #10 – 16 DT 2000

FLASHING:

- 24ga BLACK CASCADIA PREMIUM (KYNAR PVDF)

FASTENERS:

- EXPOSED #10-16 STAINLESS STEEL XYLAN 5000 COATING

WINDOWS:

- WINDOWS SUPPLIED BY PHOENIX GLASS INC.
- INTERNAL SEALANT GE ELEMAX 5000 GRAY
- EXTERNAL SEALANT GE ELEMAX 5000 BLACK

FASTENERS:

- #10-16 DT2000 SCREWS

TRESPA PANELS:

- 8mm THICK.
- COLORS: NATURAL BAGENDA; ANTHRACITE GREY
- SUPPLIED BY URBAN ONE BUILDERS

FASTENERS:

- SS SCREWS SUPPLIED BY URBAN ONE BUILDERS

FIELD SEALANT:

- GE ELEMAX 5000

COMPANY: CENTURA BUILDING SYSTEMS LTD.
460 FRASERVIEW PLACE, DELTA, BC V3M 6H4
TEL: (604) 522-4980 FAX: (604) 522-1604

PROJECT: - Student Residence at Brock Commons, University of British Columbia, Vancouver

TITLE: PANEL MATERIAL SPECS

REFERENCE	CHECK	DRAFT	SCALE	REVISION COMMENT	DATE	REV.	
		SM	-	-	JULY 15, 2016	F	D0

Figure 5.39. Material specifications – final (courtesy of Urban One Builders)

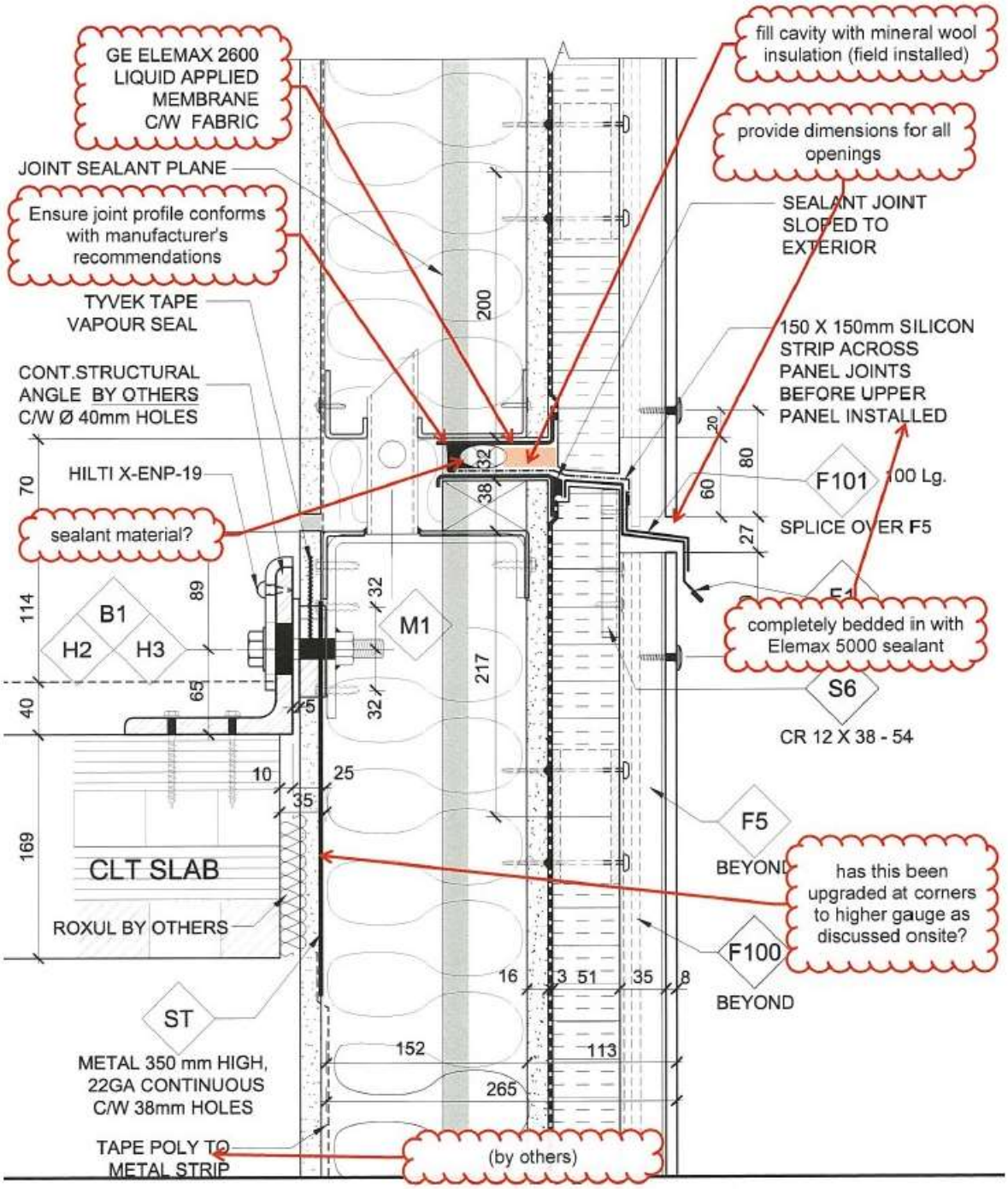

Figure 5.40. Shop drawing of panel details - review (courtesy of Urban One Builders)

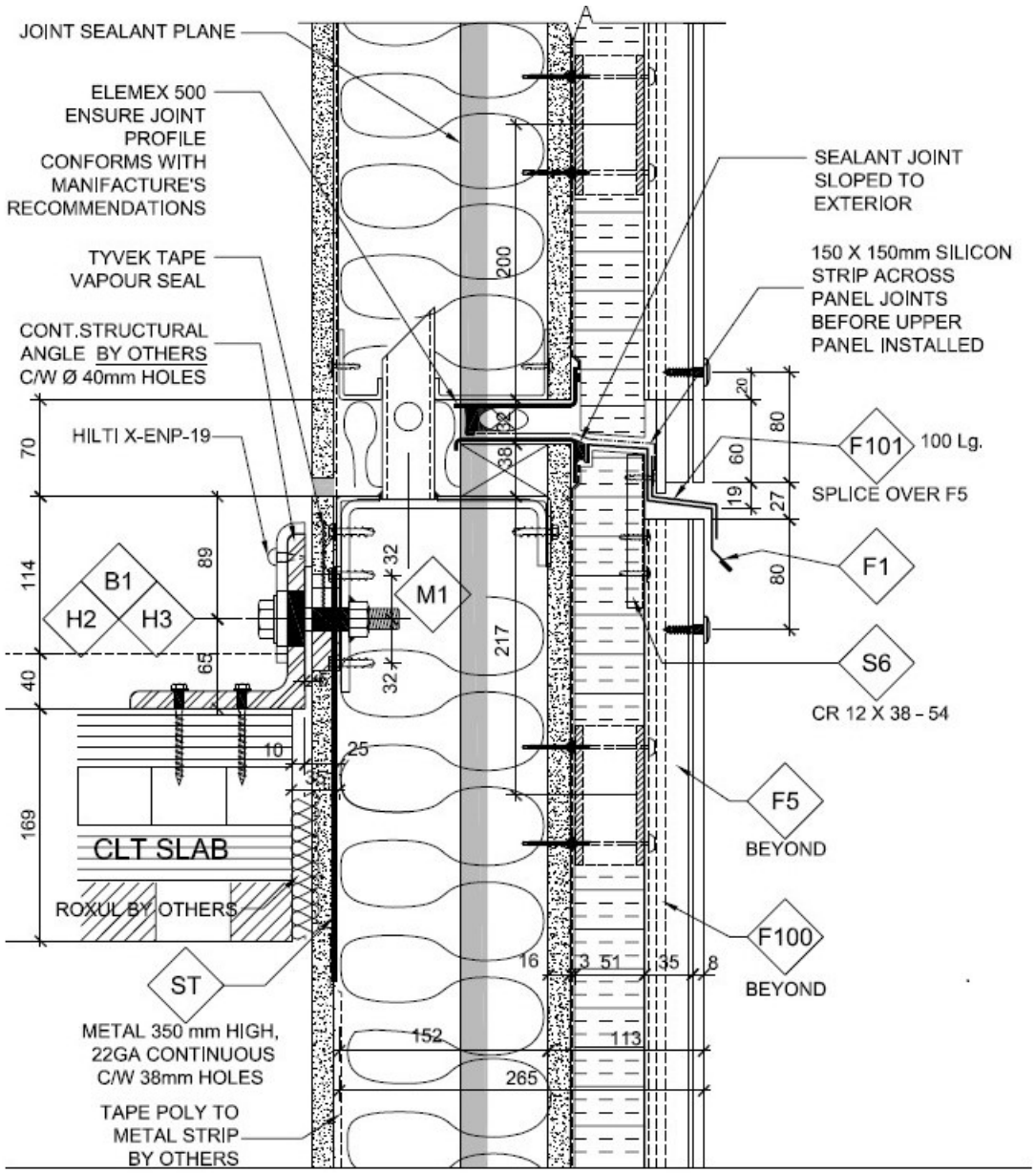

Figure 5.41. Shop drawing of panel details - final (courtesy of Urban One Builders)

As it can be seen in the figures, the reviews mostly addressed needs for clarification and additional information. A sample of the installation process being included as part of the shop drawings is presented in Figure 5.42 and Figure 5.43.

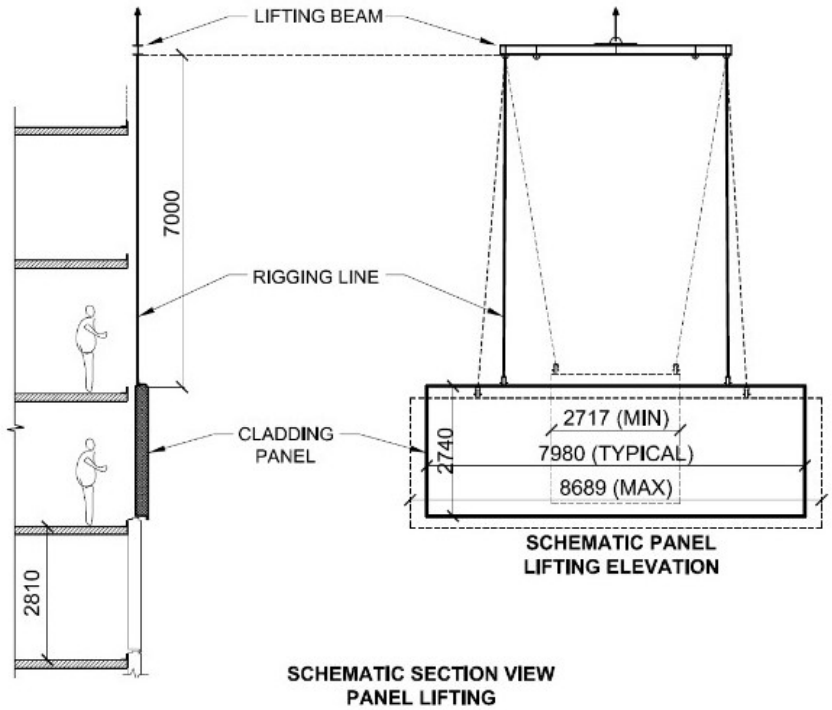

Figure 5.42. Shop drawings panel lifting I (courtesy of Urban One Builders)

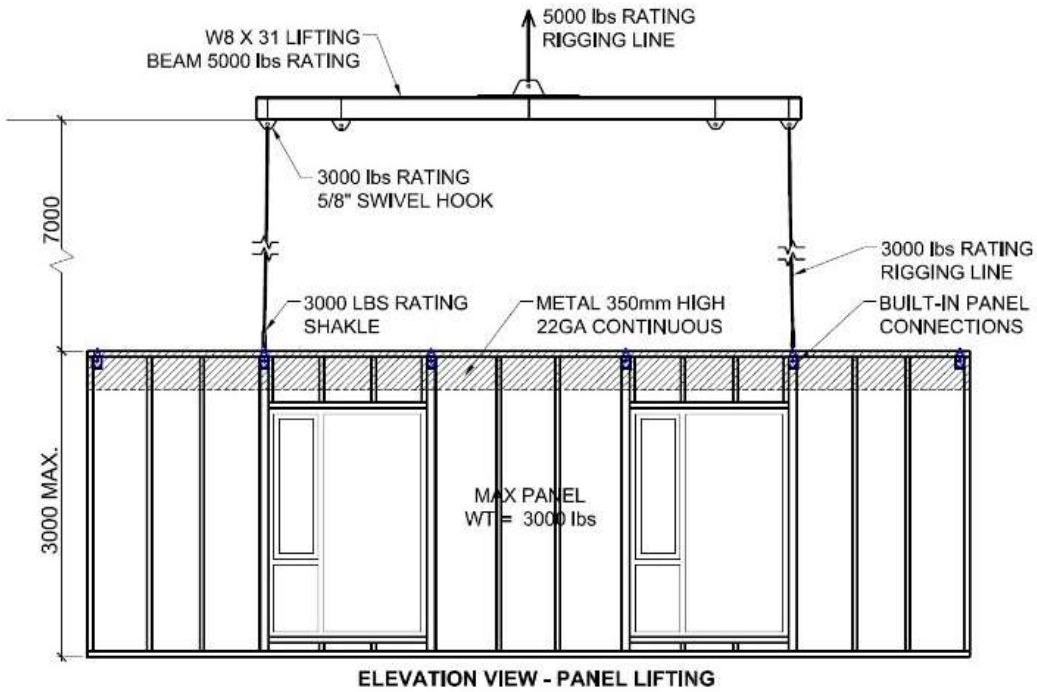

Figure 5.43. Shop drawings panel lifting II (courtesy of Urban One Builders)

As it can be seen in Figure 5.43, the lifting beam was required to have a weight rating of 5000 pounds, exceeding the maximum panel height by 2000 pounds. Also, each one of the two rigid lines and each shackle were required to have a lifting capacity of 3000 pounds, adding to a total capacity of 6000 pounds for the whole system. The Envelope Contractor mentioned that the submission of shop drawings is a common requirement and was carried as usual by the TWH project team.

5.2.3 Erection Tolerances

The project specifications (project specifications, section 07 05 00) required the installation of the envelope panels to be in compliance with the following set of tolerances:

- ± 3mm in vertical position
- ± 3mm in horizontal position
- Maximum deviation of 3mm from plumb in each plane
- Maximum offset of 0.8mm from true alignment between any two abutting panels.

All these tolerances applied to each individual panel and were not cumulative (project specifications, section 07 05 00). These tolerances were put in place to avoid modifications or issues during the installation of the envelope panels and assure that all prefabricated elements will fit in their predetermined positions. The Envelope Contractor confirmed that the tolerances were met during installation. The Envelope Contractor also stated that these tolerances are not unusual in the installation of prefabricated envelopes, being necessary to avoid constructability issues.

5.3 Durability

Durability of the envelope was mainly guaranteed by constructing it using durable materials with low maintenance requirements.

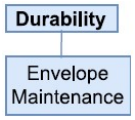

Figure 5.44. Envelope-durability QA/QC diagram

5.3.1 Envelope Maintenance

A review of the Operations and Maintenance Manual of the TWH reveal that the envelope is made of durable materials that require little and simple maintenance procedures. Specific information related to the elements exposed to outside conditions is presented below.

The envelope includes aluminum pieces that do not require special cleaning or maintenance procedures. The maintenance sheet recommends mild cleaners, which include most soaps and detergents. These types of cleaners can be used as frequently as desired without risk of damaging or aging the material. More potent cleaners like solvents and emulsions are only recommended when mild cleaners fail to provide a satisfactory cleaning. Commercial waxes and other clear coating formulations are recommended to protect the material and reduce the cost and frequency of cleaning.

The implemented glass also requires common cleaning and maintenance procedures. Glass is recommended to be cleaned with soft cloth, free from loose particles like sand or dust. A mild

non-alkaline, nonabrasive cleaning solution is recommended. In case of grease, xylene and toluene are recommended for removal, followed by a normal washing and rinsing procedure.

The cleaning and maintaining sheet of the Trespa® panels also indicate common cleaning and maintenance procedures. The maintenance sheet mentions that the panels require minimum maintenance, recommending that they be cleaned once a year, or whenever the windows are cleaned. Cleaning requires the use of a clean sponge or soft nylon brushes. For grease and grime the same window cleaning agent can be used. Organic solvents can be used to remove paint stains, or traces of adhesives and synthetic resins. The panels are resistant to scratches and they shouldn't occur under normal use. However, in case of vandalism or other events, scratches can be repaired by applying a small amount of acrylic paint with a fine brush.

More detailed information related to the maintenance of the envelope and how its long-term performance will be guaranteed has been left outside the scope of this research and is an opportunity for future studies.

Chapter 6: Quality Assurance and Quality Control of Mechanical and Electrical Systems

This chapter describes some of the main quality assurance (QA) and quality control (QC) practices related to the building mechanical and electrical systems. All of the presented QA/QC practices form part of a comprehensive commissioning (Cx) process that took place throughout the different stages of the project. The project specifications (project specifications, section 23 08 00) describe commissioning as a process meant to advance the installed systems and assemblies from a stage of static completion to full working order, in accordance with the contract documents and design intent. Commissioning mainly achieves this by running a series of start-ups and tests during construction and the early stages of occupancy. The members of the commissioning team and the communication lines between them are presented in Figure 6.1.

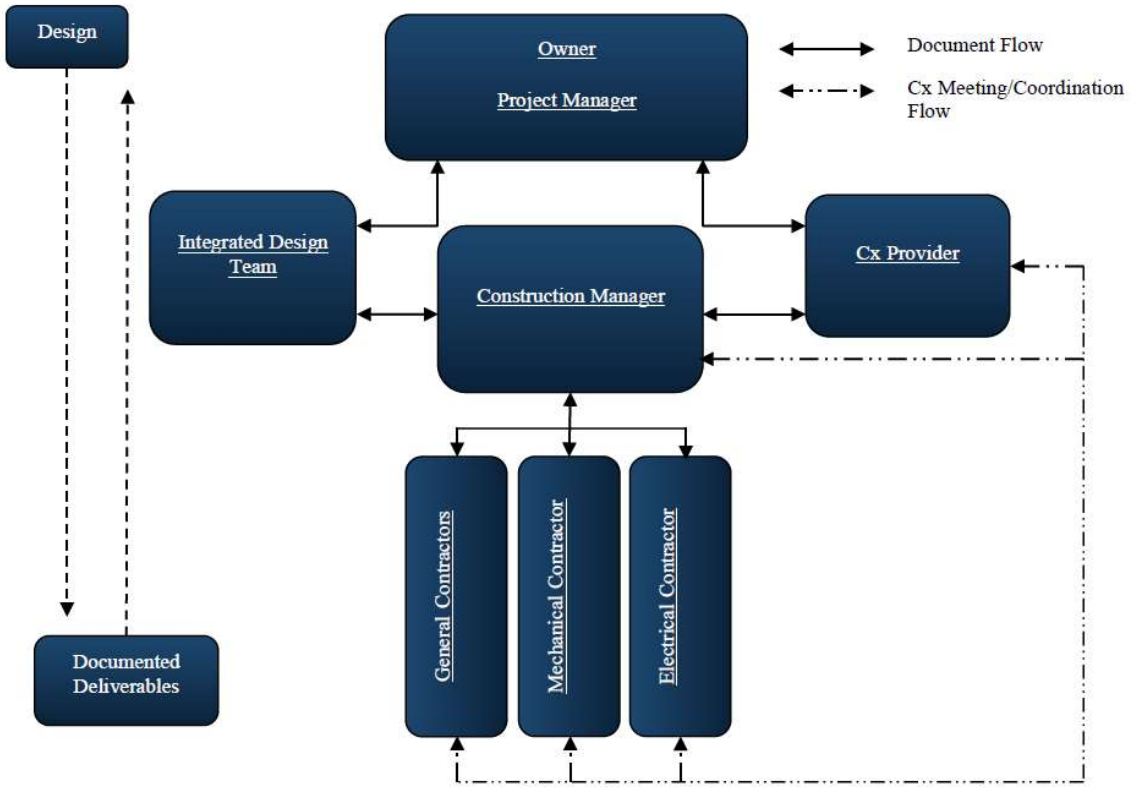

Figure 6.1. Commissioning team organizational chart (courtesy of Zenith Commissioning)

As defined in the TWH Commissioning Plan, the Commissioning Provider is the entity in charge of leading, planning, scheduling, and coordinating the commissioning process and commissioning team. Figure 6.1 clearly shows that the Commissioning Provider is fundamental to the process, maintaining communication lines with all other members of the team and being a direct source of LEED documents.

The different QA/QC practices that were carried out as part of the commissioning have been classified in this chapter following the commissioning phases defined in ASHRAE Guideline 0-2013. ASHRAE Guideline 0-2013 is a document published by the American Society of Heating, Refrigerating and Air-Conditioning Engineers (ASHRAE), and contains best practices to conduct a comprehensive commissioning process throughout the different project phases (predesign, design, construction, and occupancy and operations). ASHRAE Guideline 0-2013 has been used as a benchmark throughout this chapter since it is referenced in the project specifications and UBC Commissioning Technical Guideline. The Commissioning Provider also confirmed that the commissioning process heavily resembles the one described in ASHRAE Guideline 0-2013. Additionally, the LEED V4 Reference Guide for Fundamental Commissioning and Verification and the LEED V4 Reference Guide for Enhanced Commissioning were also reviewed and used to benchmark the TWH commissioning process. This was done because the UBC LEED Implementation Guide and the project specifications (project specifications, section 01 35 18) require all new building to follow both processes and obtain a LEED Gold Certification.

6.1 Predesign

The predesign commissioning phase followed the practices recommended by ASHRAE Guideline 0-2013. According to ASHRAE, the main goal of the predesign phase is the development of the Owner's Project Requirements (OPR) and an initial version of the Commissioning Plan. The OPR is a document that details the functional requirements of the project. This document indicates the expected uses of the project and how it is meant to be operated, the project goals, cost considerations, and success criteria (ASHRAE Guideline 0-2013). The Commissioning Plan is the main document describing the commissioning process, including the commissioning team and its organization, activities, schedule, and documentation requirements (ASHRAE Guideline 0-2013). A more complete summary of the practices recommended by ASHRAE is presented in Figure 6.2.

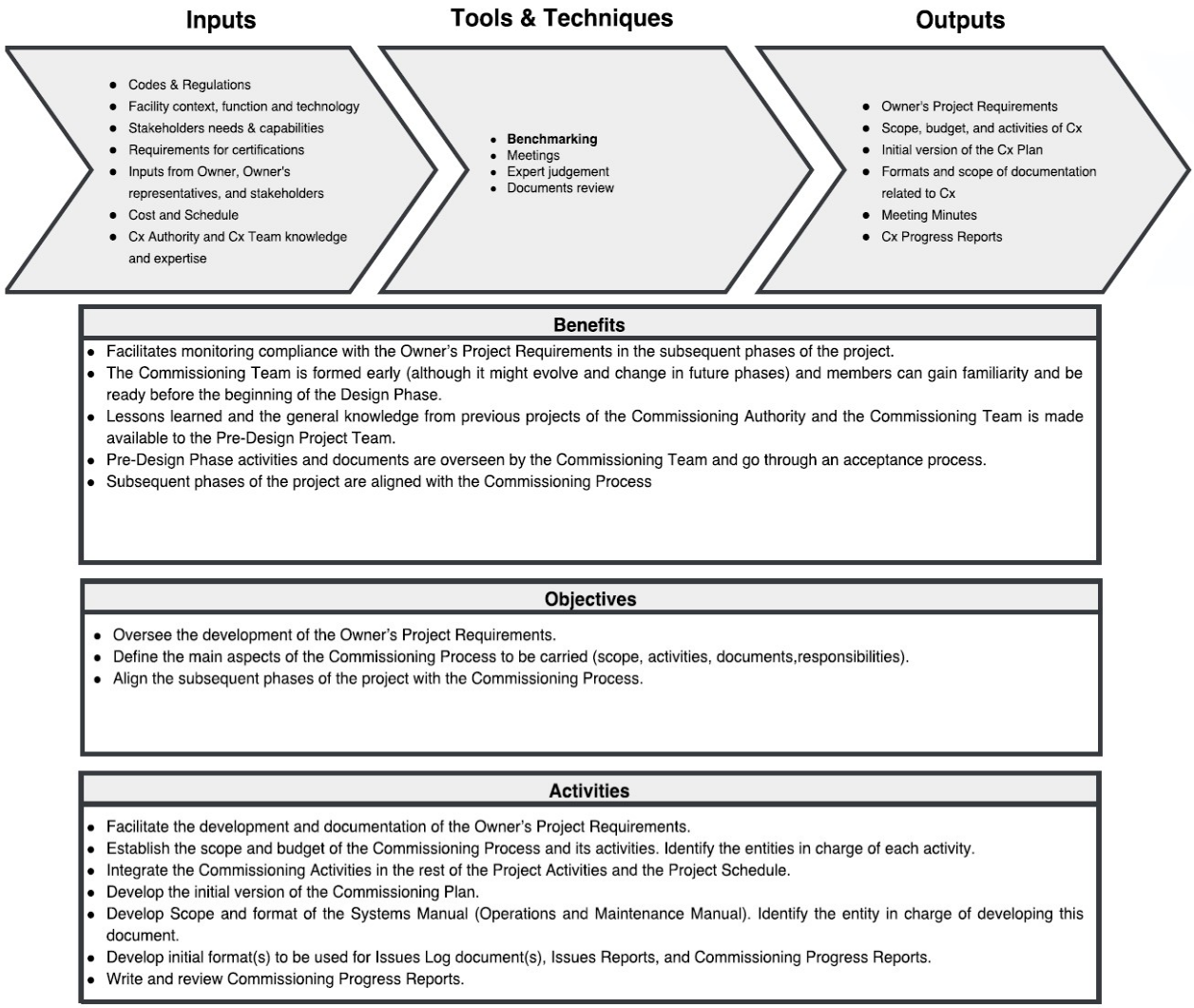

Figure 6.2. ASHRAE Guideline 0-2013 predesign phase

The commissioning process of the TWH followed these practices and the required documents (or equivalents) were developed. This included an initial version of the commissioning plan and two documents that contain all the information required by ASHRAE to serve as an OPR. These documents are:

- A Design Brief containing the design goals of the project including environmental goals, economic goals, and LEED certification requirements.

- A Functional Program containing the space distribution of the building and the required areas (Figure 6.3).

Unit Function	# Beds	# Units	Unit Area (s.m.)	Total Area (s.m.)
STUDENT HOUSING & HOSPITALITY SERVICES				
Housing Units	404			
1-Bedrm Units (Studios)	272	272	21.4	5,821
4-Bedrm Units (Quads)	132	33	101.1	3,336
Student Housing Shared Space				
Resident Social & Study Space				289
Laundry				18
Resident Bike Storage				*-- in gross-up --*
VP STUDENTS (NON-SHHS SPACE)				
Collegium				187
TOTAL NET S.M.				**9,651**
Building gross-up (1.57 x)				5,464
TOTAL BUILDING GROSS S.M.				**15,115**
			Total GSM per Bed	*37.4*
TOTAL BUILDING GROSS S.F.				**162,700**
			Total GSF per Bed	*403*

Figure 6.3. TWH Functional Program (courtesy of UBC Infrastructure Development)

A formal OPR was developed at later stages to comply with LEED documentation requirements. However, the Design Brief and Functional Program of the TWH fully served the purpose of an OPR, being the primary tool for benchmarking success and quality at all phases of the project delivery and life of the facility.

6.2 Design

The design commissioning phase followed the practices recommended by ASHRAE Guideline 0-2013. According to ASHRAE, the main goal of the design phase is to develop the construction documents complying with the OPR. Another critical step is to incorporate all the pertinent commissioning requirements in the construction documents. As stated in the ASHRAE Guideline 0-2013, the commissioning process requires certain QA/QC procedures to take place. These

procedures usually require the participation of contractors. The construction documents should mention the obligation of the contractors to cooperate with the Commissioning Provider and commissioning process (ASHRAE, 2013). Including these requirements in the construction documents allow the contractors to understand their roles and responsibilities. This allows the contractors to include the related costs in their bids (Grondzik, 2009). Failure to properly include the commissioning requirements can typically result in an increased number of change orders (Grondzik, 2009). A more complete summary of the practices recommended by ASHRAE is presented in Figure 6.4.

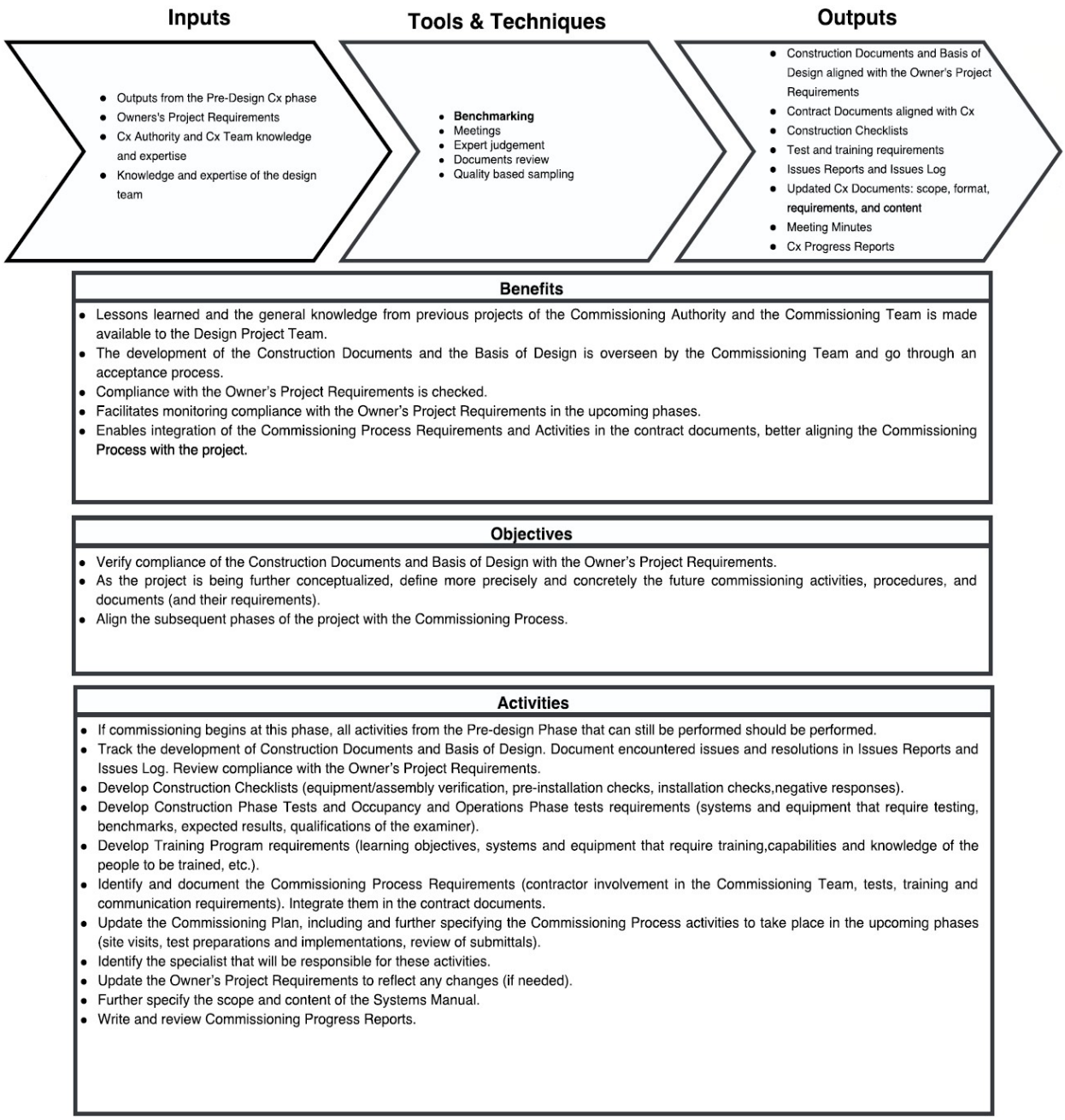

Figure 6.4. ASHRAE Guideline 0-2013 design phase

The TWH commissioning process followed these practices, the main ones being:

- to develop a comprehensive commissioning plan describing the commissioning process
- to carry an independent design review
- to include all pertinent commissioning requirements in the construction documents

These practices are presented in the following sections.

6.2.1 Commissioning Plan

The commissioning plan of the TWH was developed by the Commissioning Provider. The commissioning plan of the TWH was reviewed as part of this study. As part of this review, the document was compared to the specifications of the ASHRAE Guideline 0-2013. According to the ASHRAE Guideline 0-2013, the commissioning plan is a document that outlines the organization, schedule, allocation of resources, and documentation requirements of the commissioning process (ASHRAE, 2013). The review of the commissioning plan showed a high level of compliance with the description of the ASHRAE Guideline 0-2013. A summary of this review is presented in Table 6.1. Table 6.1 presents the main information that a commissioning plan should contain according to ASHRAE, it indicates whether or not that content was included in the commissioning plan of the TWH, and presents additional information about that content.

Table 6.1. Review of the TWH commissioning plan

ASHRAE's Specified Content	Inclusion in THW Cx Plan	Examples/Further information
Roles and responsibilities of the Commissioning Team	Yes	Cx Plan includes a Summary of Project Responsibilities table, summarizing the responsibilities of the Cx Team members
Communication channels	Yes	Cx Plan includes an organizational chart including coordination and documents flows. Section 5 of the Cx Plan (Coordination and Communication) has 12 points detailing communication and coordination procedures.
Description of commissioning activities and a schedule	Yes	A Cx schedule exists and contains Cx activities and milestones. Main activities are also located in the Summary of Project Responsibilities table. Further description are found in the sections System Inspection and Testing and Demonstration and Handover.
Guidelines and formats of the commissioning documents and forms	Yes	Cx Plan contains a Commissioning Documentation List, naming all commissioning documents to be generated in the process. Cx Plan specifies the information to be included in the documents. Formats are not specified.
Procedures to review designs and Construction Documents	No	Cx Plan indicates the members responsible for the reviews, but procedures are not indicated.
Systems and assemblies to be verified and tested	Yes	Cx Plan has a table indicating all systems to be commissioned.
Test procedures and data forms	Yes	Included in the Systems Inspection and Testing section.

As it can be seen in Table 6.1, some of the main pieces of information missing in the TWH commissioning plan are the procedures to review designs and construction documents. However, these activities were carried out and are summarized in the next section. According to the Commissioning Provider, this information was not included because the commissioning plan was developed during the design phase of the project, meant to be used during construction. Thus, the inclusion of information about a phase that was approaching completion was considered to be unnecessary. The main idea was to give all entities participating in commissioning a commissioning plan with useful and concise information about the process.

Another piece of information that is missing in the TWH commissioning plan is the formats of the commissioning documents. Based on his past experiences, the Commissioning Provider mentioned that members of the commissioning team, mainly mechanical and electrical commissioning agents, usually have their own formats for most of the documents that they are responsible for generating. The process that the Commissioning Provider typically follows is to ask for existing formats to review them, checking if items should be added or removed, or if modifications, usually small, need to be made. The intention of the Commissioning Provider is to collaborate with the members of the team while not being disruptive in their processes. The Commissioning Provider had formats for the commissioning documents that he was in charge of generating, including the Final Commissioning Report and the System Manual.

6.2.2 Design Review

The design review was conducted by the Commissioning Provider, in accordance with the LEED V4 Reference Guide for Fundamental Commissioning and Verification. LEED requires the Commissioning Provider to act as an independent third party, advocating for the owner, making a review meant to assure that the designs are in compliance with the OPR. These reviews were performed before completion on the designs, facilitating the inclusion of observations, and constantly maintaining the project in the right track.

The results of this review are documented in the Design Review Report, a document developed by the Commissioning Provider. The introduction of this document states that it was developed as part of the commissioning process and as part of the LEED submissions for commissioning. One of the main parts of this document is a checklist containing general, architectural, electrical, and mechanical items to be checked. Some examples of these items are presented below.

- General items (total of 7) include a review of equipment warranties and specifications for the integrated Fire and Life Safety Systems Testing.
- The only two architectural items are the definition of envelope-commissioning requirements and the identification of any other architectural systems that require commissioning services.
- A total of 17 electrical items were checked. The items are classified in distribution, power generation, life safety, lighting system, and security, access control and communications. Items include definition of tests and specifics about the systems, like clearly defining the causes and effects of fire alarms and clearly indicating the location, sensing parameters, and time delays of occupancy sensors.

- Finally, 34 mechanical items were checked. These items are classified in air system, water system, heating and cooling, domestic water system, BMS system, life safety, and measurement and verification. Some items refer to tests definitions including indoor air quality and Megger tests. Other items refer to the definition of some procedures like air balancing and flushing and cleaning of pipework. Additional items check specifics of the systems and the designs, like indicating the location of the air system balancing dampers in the drawings and the balancing valves of the water systems.

The second part of the Design Review Report is more extensive and consist of a series of queries, were the Commissioning Provider makes specific comments on the designs and gets responses from the pertinent members of the design team. A total of 121 queries are recorded in the Design Review Report, examples are:

- Technical queries, pointing issues in the designs or asking for clarification and further information. One of the queries, for example, pointed out that four heat exchangers needed to have two control valves each, while only one control valve was indicated in the design. The query was received and the design was corrected.
- Other queries ask to refer to the correct standard or guideline. One query asks to replace a LEED 2009 reference with LEED V4. Other queries ask to reference test procedures like the "CAN/ULC S1001-11" (Standard for Integrated Systems Testing of Fire Protection and Life Safety Systems) and the Procedural Standard for Testing, Adjusting and Balancing of Environmental Systems, 2015.
- A third set of queries deal with the inclusion of commissioning requirements in the construction documents. For example, in the Quality Control section of the project

specification (section 01 45 00), a query asks to include that the Commissioning Provider may review any process of installation, testing, and equipment/system performance.

6.2.3 Commissioning Requirements

As stated in the previous section, part of the design review conducted by the Commissioning Provider involved assuring that the commissioning requirements were included in the construction document. This is one of the important benefits of engaging the Commissioning Provider early on and executing the commissioning process throughout the design phase of the project.

To study the inclusion of commissioning requirements in the TWH, the project specifications were reviewed. This review was conducted to ensure that the commissioning requirements were included in all pertinent sections of the specifications. A summary of the review is presented in Table 6.2.

Table 6.2. Inclusion of commissioning requirements in the project specifications

Section #	Section Name	Main Points	Further Information
01 35 18	LEED Requirements	Obligations of contractors and subcontractors related to LEED Certification, Fundamental Commissioning and Verification, and Enhanced Commissioning	The contractor and subcontractors are required to participate in LEED documentation and certification processes. They are also required to provide all required data and information for LEED submissions and to cooperate with the LEED Champion. The section also includes a LEED Category Breakdowns, specifying the categories and credits to be obtained during the certification process. For each category, the section specifies the actions and level of cooperation needed from the contractors. Fundamental Commissioning and Verification, and Enhanced Commissioning are included in the Category Breakdown under the Energy and Atmosphere Category. Examples of the specified actions and cooperation requirements include: (1) give access to the Commissioning Provider to equipment as required, and (2) provide adequate time and adequate testing personnel to carry commissioning tasks and complete requirements of the Cx Plan.

Table 6.2. Inclusion of commissioning requirements in the project specifications

01 45 00	Quality Control	Inspection and testing requirements Procedures to be followed in case of encountered defects	Contractors must cooperate with Authorities Having Jurisdiction and independent testing and inspection agencies. They must provide appropriate levels of access to work, both onsite and offsite. It is stated that if defects are revealed during testing or inspections, additional testing can be requested to ascertain full degree of defect. Defects and irregularities must be corrected as advised by the Consultant at no cost to the Owner. Costs of retesting and re-inspection must also be covered if needed.
01 45 50	Measurement and Verification	Commissioning roles of the Commissioning Provider, Cx Agents and contractors Performance tests and training requirements	The section presents specifications to be followed by the contractors in the matter of the building's Measurement and Verification (M&V) System, described as an inbuilt hardware system capable of gathering, storing, processing, delivering, and reporting data. The Commissioning Provider as well as the Cx Mechanical and Electrical Agents are mentioned as part of the M&V Team. It specifies that the Commissioning Provider and the Construction Manager are in charge of coordinating the commissioning activities, with the Commissioning Provider reporting to the owner. The section requires the system to be commissioned in whole, making clear that the system designers and installing contractors are responsible for providing a fully finished and functioning system. It is also stated that contractors are responsible for furnishing labor and materials needed to carry all Cx activities, including those taking place during the warranty period. More specifically, it clarifies that contractors are responsible for all required commissioning tests. The section specifies that the whole execution shall comply with section 01 91 00 (Commissioning), including performance tests. The contractors are also responsible for providing adequate on-site training on how to operate the system. This training is required to be in coordination with section 01 91 00 (Commissioning).
01 75 16	Start-up Procedures	Role of the Commissioning Provider, Construction Manager, and contractors Documentation requirements and procedures Mandated reviews	Section 01 91 00 (Commissioning) is mentioned as a related section. It is made clear that the Start-up Report to be filled must the one provided by the Commissioning Provider. Main aspects of the Start-up Report are specified, including main sections and information to be included. These reports must be completed by the Construction Manager and Trade Contractors during start-ups and resubmitted to the Commissioning Provider for review within ninety days. The Commissioning Provider is then in charge of using these sheets and include all relevant information in the final Cx Documents delivered to the owner. Actions to be performed by the Commissioning Provider during start-ups are specified, including witnessing, keeping an Issues Log, and verifying correction of deficiencies.
01 75 19	Testing Adjusting and Balancing	Rationale and purpose of testing Roles and responsibilities Documentation requirements	It is specified that all static checks must be completed and signed off on the commissioning report forms before testing. It is made clear that the intent of testing is to confirm compliance with the Contract Documents and that corrective actions must be taken if necessary. Construction Manager and Trade Contractors are required to cooperate and assist with balancing activities.
01 77 00	Contract Closeout	Completion requirements	Between other things, the final Certificate of Completion includes that equipment and systems have been tested, adjusted, balanced, commissioned and are fully operational.

Table 6.2. Inclusion of commissioning requirements in the project specifications

01 78 10	Closeout Submittals	Documentation requirements Mandated reviews	The section specifies the requirements, format, and content of the Operations and Maintenance Manuals to be delivered by the contractors. An O&M Manual is required for each system and major piece of equipment. Part of the requirements include a review made by the Commissioning Provider.
01 91 00	Commissioning	Definition and goals Participants, responsibilities, documentation and general execution	Main section describing the Cx Process. It is defined as a quality-oriented process, ensuring that all systems perform in accordance with the design intent and the operational needs of the owner. It signals the Cx Process as the one in charge of coordinating system documentation, equipment startup, testing, balancing, calibration and demonstrations. The section specifies the members of the commissioning team, the Commissioning Organizational Chart, the objectives of commissioning during design and construction, the scope of work, roles and responsibilities, documentation requirements, and general guidelines of execution.
21 08 00	Commissioning of Fire Suppression	List of fire suppression equipment and systems to be commissioned Responsibilities of contractors and manufacturer's	This section references section 23 08 00 Commissioning of HVAC Systems. The same specified sequence must be followed. Equipment and systems to be commissioned are mentioned and include wet and dry sprinkler systems, fire and jockey pumps, and heat tracing system.
	Commissioning of Plumbing	List plumbing equipment and systems to be commissioned Responsibilities of contractors and manufacturer's	This section references section 23 08 00 Commissioning of HVAC Systems. The same specified sequence must be followed. Equipment and systems to be commissioned are mentioned and include domestic hot and cold water, sanitary waste and venting, and storm drainage.
23 08 00	Commissioning of HVAC Systems	Focused on commissioning during construction Definition and intent of commissioning, sub-phases of commissioning during construction Responsibilities of the Commissioning Provider, General Contractor, and other members of the Cx Team	The section presents a description of the commissioning process, more focused on the construction phase of the project. Commissioning is defined as the process of advancing the installation from the stage of static completion to full working order in accordance with contract documents and design intent. The commissioning process to be carried by contractors during construction is divided in System Readiness, System Start-up, Testing and Balancing, Verification of System Performance, and Demonstration & Instructions. For each one of these sub-phases, the specifications provide a description, intent, requirements, and documentation to be generated.

Besides the project specifications, other sources were found to contain information related to the commissioning process. The main sources are:

- The project specifications.
- The commissioning plan.
- UBC Commissioning Technical Guideline
- LEED V4 commissioning requirements

The existence of different sources containing information about the commissioning process is not uncommon in construction projects. However, this requires special attention and care. An experienced professional that has worked for UBC as a Commissioning Provider in various projects, mentioned that a key part of commissioning is to review all the different sources describing the commissioning process, looking for discrepancies and contradictions. The intended outcome is to have a clear and unanimous message about how is commissioning to be performed, avoiding confusion and problems during execution. The Commissioning Provider mentioned that this review was done. The review carried out as part of this research did not find any discrepancies or contradictions between these documents.

6.3 Construction

The construction commissioning phase followed the practices recommended by ASHRAE Guideline 0-2013. According to ASHRAE, the main goal of the construction phase is to verify that commissioned systems, equipment, and assemblies comply with the OPR. This process typically involves carrying out tests and training the building operators. These tests and trainings must be appropriate to guarantee compliance with the OPR. A more complete summary of the practices recommended by ASHRAE are presented in Figure 6.5.

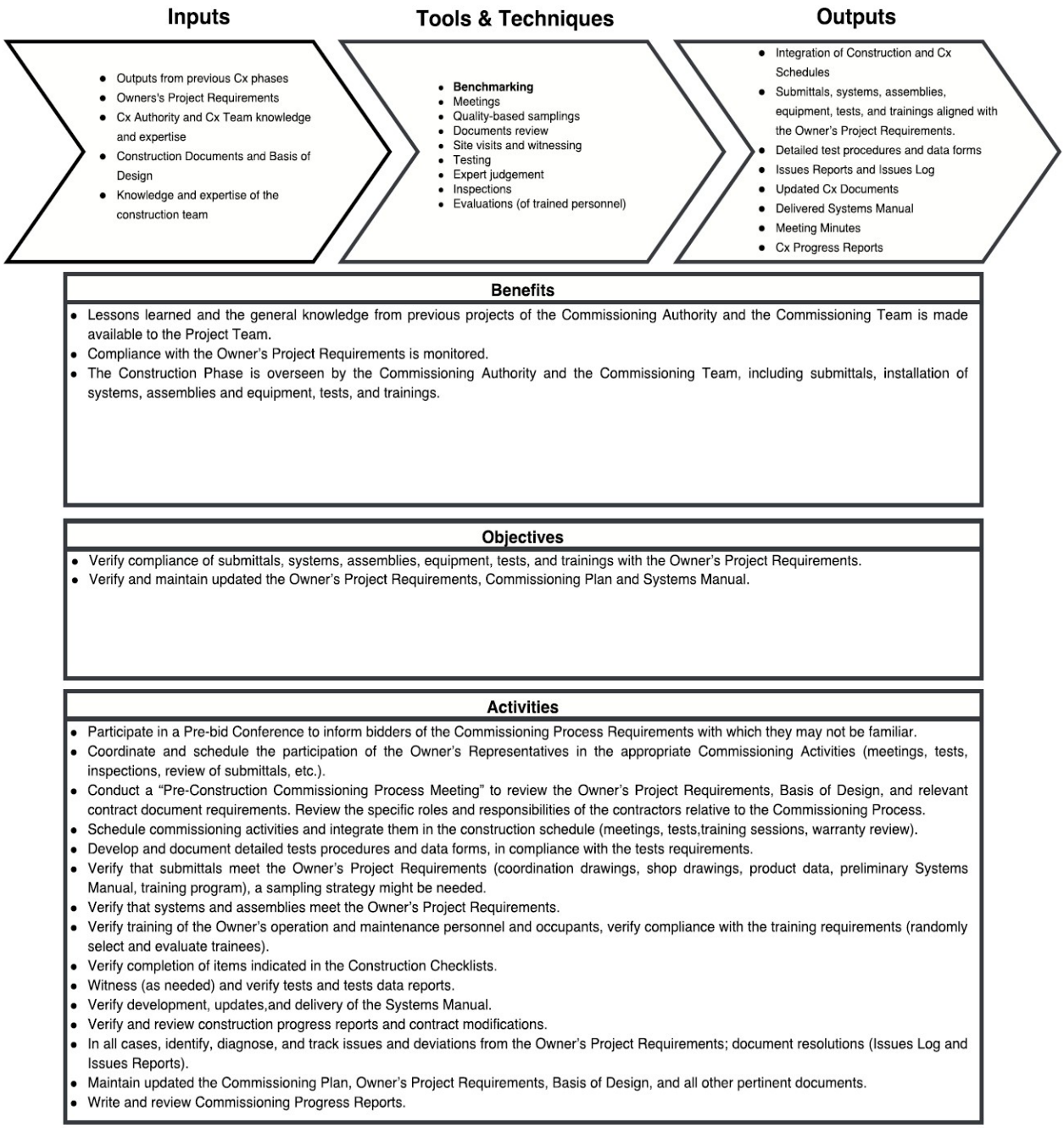

Figure 6.5. ASHRAE Guideline 0-2013 construction phase

The commissioning plan of the TWH includes Table 6.3, showing the systems to be commissioned and main procedures to be followed. An explanation of some of these items is presented below.

Table 6.3. TWH commissioning scope (courtesy of Zenith Commissioning)

Mechanical Systems:	Electrical Systems:	Other Systems:	Facility Integration:
Building Automation System	Sub-stations, transformers and power distribution and controls	Building LEED Flush EQ3.2 (if applicable)	Integrated Building Management Testing
HVAC, all equipment	Lighting control, dimming systems, occupancy sensing & scheduling	Vertical Transport	Utility Power Failure Testing
Domestic Water, Cold and Hot & Irrigation	Security, Access Control and Intruder Alarm	Building Envelope	Emergency Integration Testing
Plumbing	CCTV		Demand Control
Mechanical energy metering	Emergency Generators & Transfer Switch		Measurement and Verification database and interfacing
	Electrical Energy Metering		Facility Staff Demonstration

- Building Automation System: also known as Building Management System (BMS), consist on sensors and other pieces of hardware installed in the building, allowing information to be gathered that can be analyzed and visualized remotely. The BMS system of the TWH also allows remote manipulation of pieces of equipment and is presented in more detail in Section 4.4.
- Heating, Ventilation and Air Conditioning (HVAC) system: provides conditioned outside air to the building while evacuating exhaust air. One of the main pieces of equipment is a Heating Recovery Ventilation (HRV) Unit located in the roof. This equipment circulates exhaust air and outdoor air through an energy recovery wheel (ERW), regaining some of the heat present in the exhaust air, while providing fresh air to the building.
- Domestic water system: includes three pumps operating in parallel, located in the mechanical room of the ground floor. These pumps progressively turn on to feed the system as demand increases.

Figure 6.6. TWH domestic water system – pumps

- Plumbing: black and gray water systems. In the TWH, these operate by gravity.
- Mechanical energy metering: data-gathering devices, metering the energy consumed by different pieces of equipment of the mechanical system. The collected data is shared with the Building Management System.
- CCTV: closed-circuit television
- LEED Flush EQ 3.2: a LEED flush-out is required to supply a total of 14,000 cubic feet of outdoor air per square foot of gross floor area before occupancy. The idea of this procedure is to provide occupants with a higher quality of indoor air by flushing-out dust and other particles that were released during construction and contaminate the air. This procedure awards one point to the certification process.

- Vertical Transport: the building elevators.

The observations made on site confirmed that the commissioning plan was followed and the previously presented systems were commissioned. These observations also showed that the commissioning process was conventional despite the minor modifications that were required to make the mechanical systems compatible with the building's structure and envelope. Some of the observed modification are:

- Inclusion of flexible connections in the HVAC, irrigation, and domestic water systems to account for the expected differential settlement of the structure (Figure 6.7).
- All kitchens employed range hoods that filtrate and recirculate air, as opposed to exhausting air to the outside of the building (Figure 6.8). This was done to avoid penetrations through the prefabricated envelope panels.

Figure 6.7. Flexible HVAC and plumbing connections

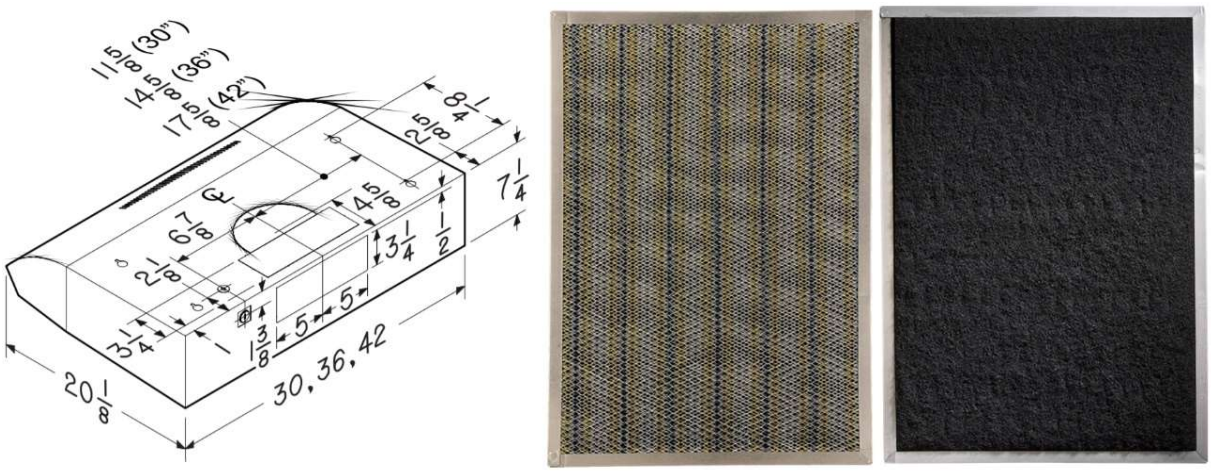

Figure 6.8. Kitchen range hoods and carbon filters (retrieved from http://www.broan.ca/common/productDigitalAssethandler.ashx?id=67189429-2023-4617-869b-df13a32ca5b4)

However, none of these modifications required additional steps or efforts in the commissioning process. The use of carbon filters and range hoods that recirculate air are not uncommon for residence buildings. Similarly, the use of flexible connections is not uncommon either, as they are often employed to enhance the seismic performance of the systems. As a consequence, these modifications were not a source of uncertainty or risk to the performance of the systems and did not require modifications to the start-up or testing procedures. As stated by the Commissioning Provider, the mechanical systems and assemblies of the building are ordinary, so the checks, start-ups, and tests were also ordinary. As part of this study, various commissioning tests were witnessed and are presented in Appendix B.

6.4 Occupancy and Operations

The occupancy and operations commissioning phase will follow the practices recommended by ASHRAE Guideline 0-2013. According to ASHRAE, the main goal of the occupancy and operations phase is to continue verifying that the commissioned systems, equipment, and

assemblies comply with the OPR. A more complete summary of the practices recommended by ASHRAE are presented in Figure 6.9.

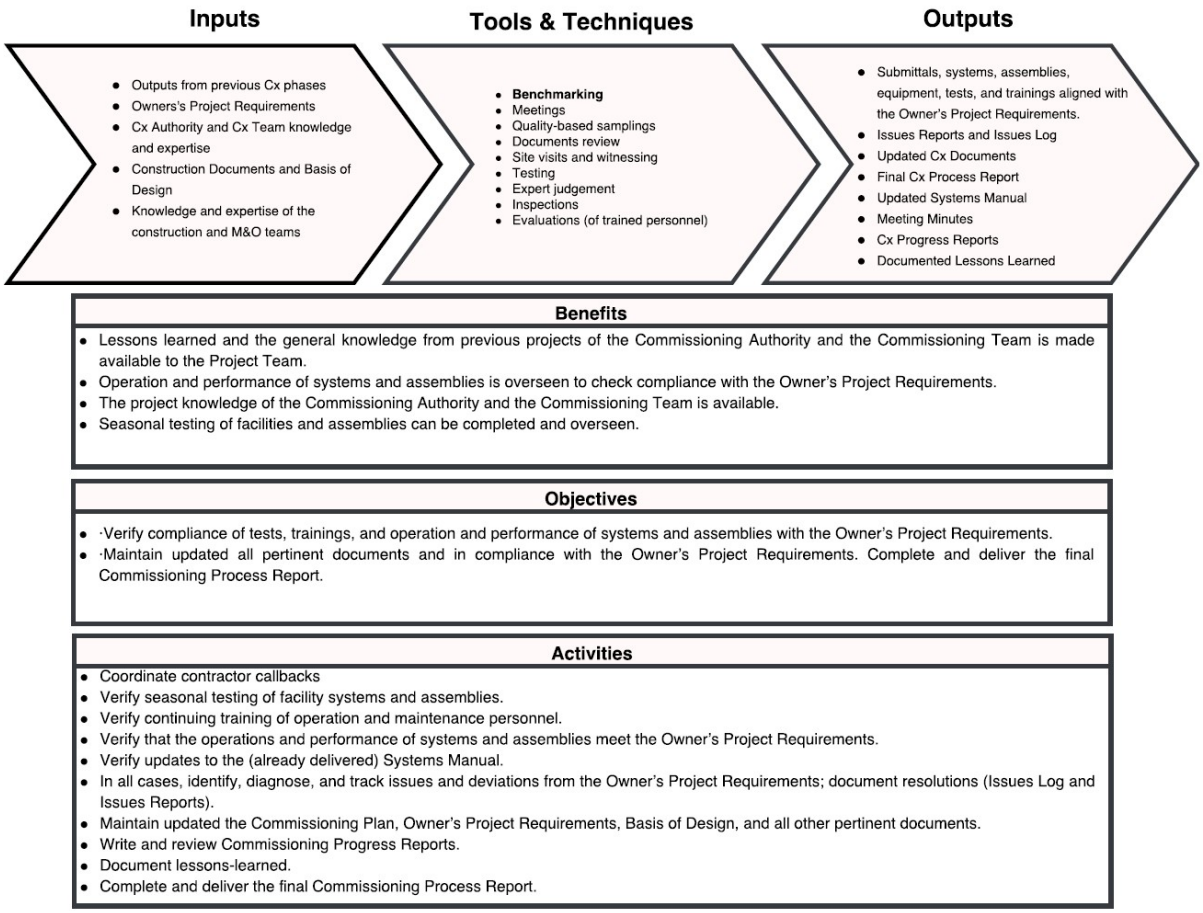

Figure 6.9. ASHRAE Guideline 0-2013 occupancy and operations phase

This phase will involve seasonal testing and the use of the BMS to assess the performance of the building. The set-up of the BMS is in the final stages and is already receiving and displaying data. The TWH is employing a Johnson Controls platform (METASYS) to display the recorded data. A screenshot of the home-screen of the building is presented in Figure 6.10.

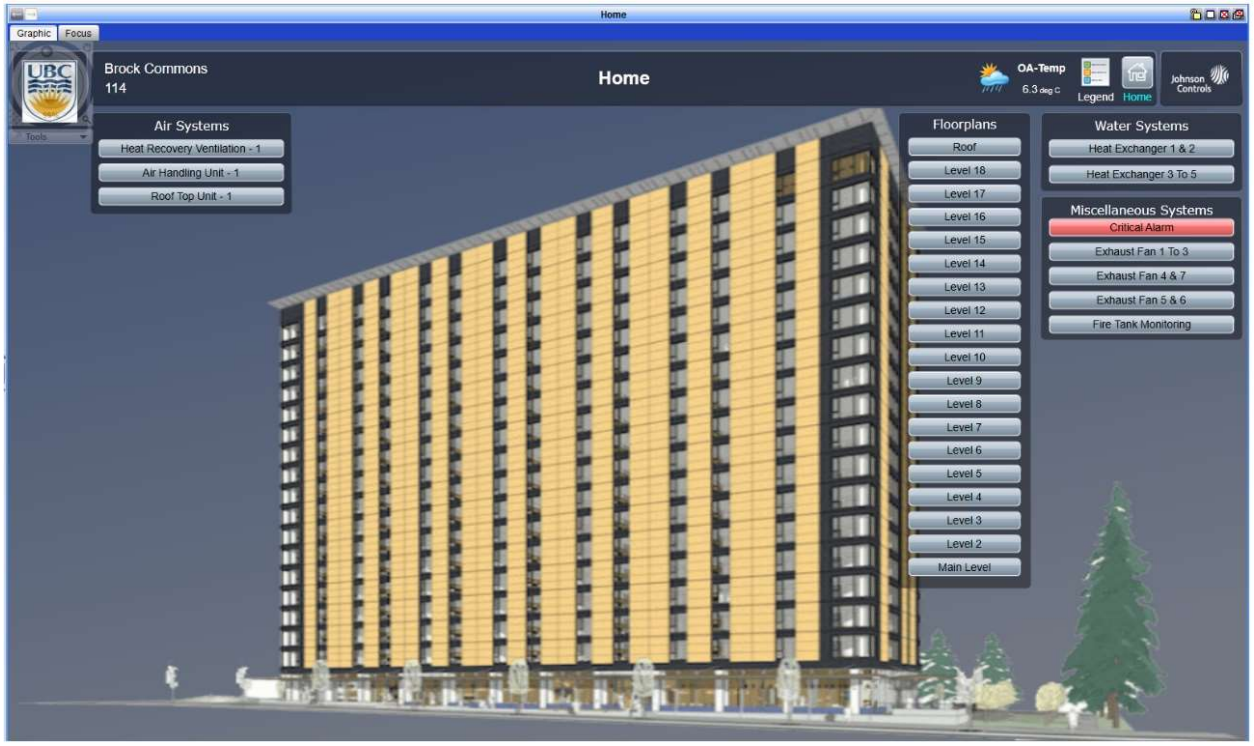

Figure 6.10. TWH BMS – home screen (courtesy of UBC Energy and Water Services)

The platform provides a series of easy-to-navigate controls that allow the visualization of the different systems in the building. As an example, a view of the HRV unit is presented in Figure 6.11.

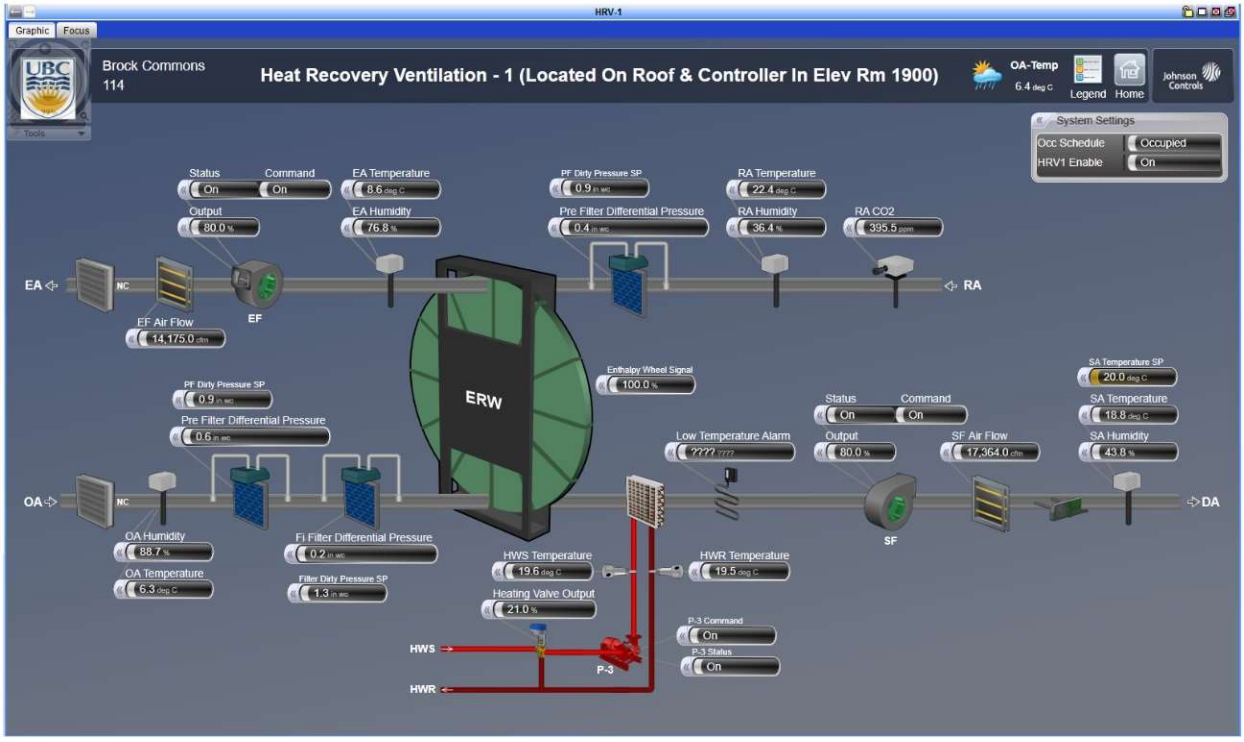

Figure 6.11. TWH BMS – HRV 1 (courtesy of UBC Energy and Water Services)

The data display in Figure 6.11 corresponds to December 18, 2017 at 13:49 local time. As it can be seen, the system is increasing an outside air temperature of 6.3 °C to a supply air temperature of 18.8 °C. To obtain this, besides using the ERW at 100% of its capacity, the system is supplying hot water at 19.6°C to 21% of the total capacity. Figure 6.11 also allows to observe that, due to the ERW, the exhaust air temperature is dropping from 22.4 °C to 8.6 °C. Additionally, the concentration of CO_2 in the exhaust air is recorded, allowing the amount of fresh air that is needed to maintain healthy conditions to be assessed. The differential pressure at the air filters is also recorded. High differential pressures indicate that a significant amount of filtered matter has been retained, allowing an assessment of the state of the filter and whether maintenance is needed. As another example, a plan view of the main floor is presented in Figure 6.12.

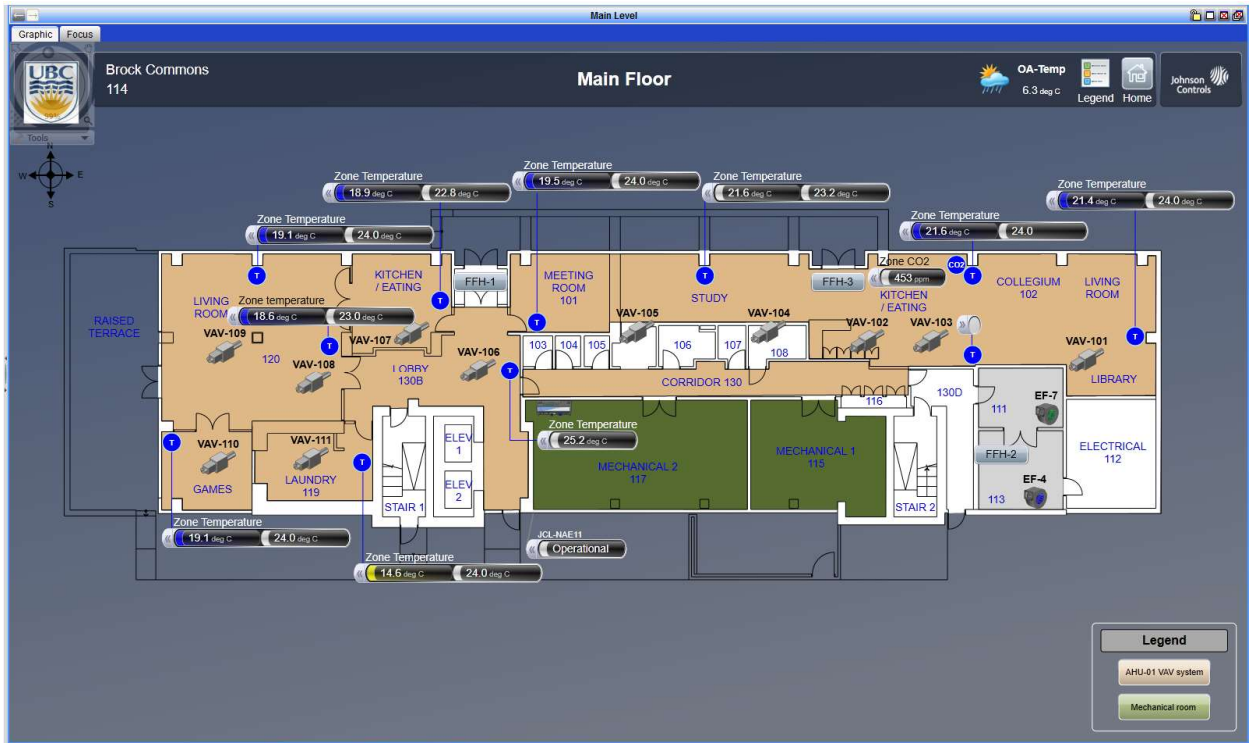

Figure 6.12. TWH BMS – main floor (courtesy of UBC Energy and Water Services)

As it can be seen in Figure 6.12, different room temperatures are recorded, as well as the CO_2 concentration. This view also allows to further the assessment of the state of the building by clicking in the icons representing different elements like the variable air volume (VAV) boxes and the exhaust fans (EF). As an example, a view of VAV-106 and EF 4 and 7 are presented in Figure 6.13 and Figure 6.14 respectively.

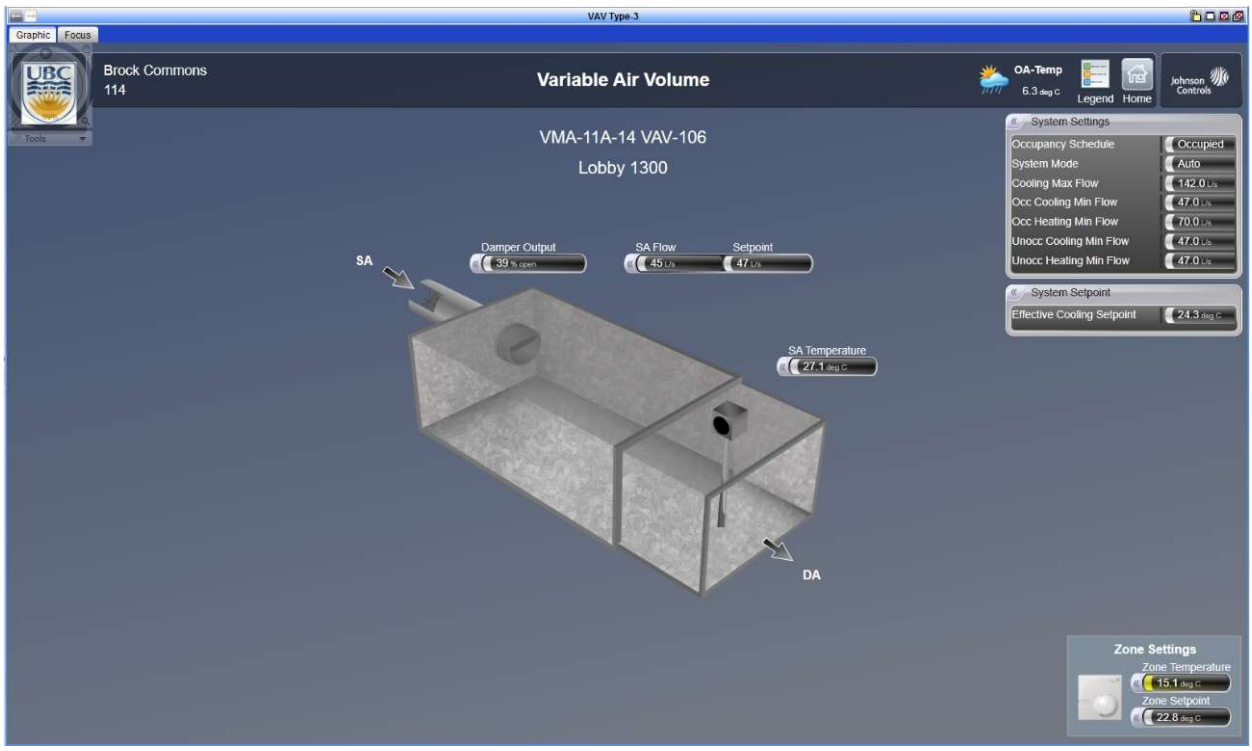

Figure 6.13. TWH BMS – VAV 106 (courtesy of UBC Energy and Water Services)

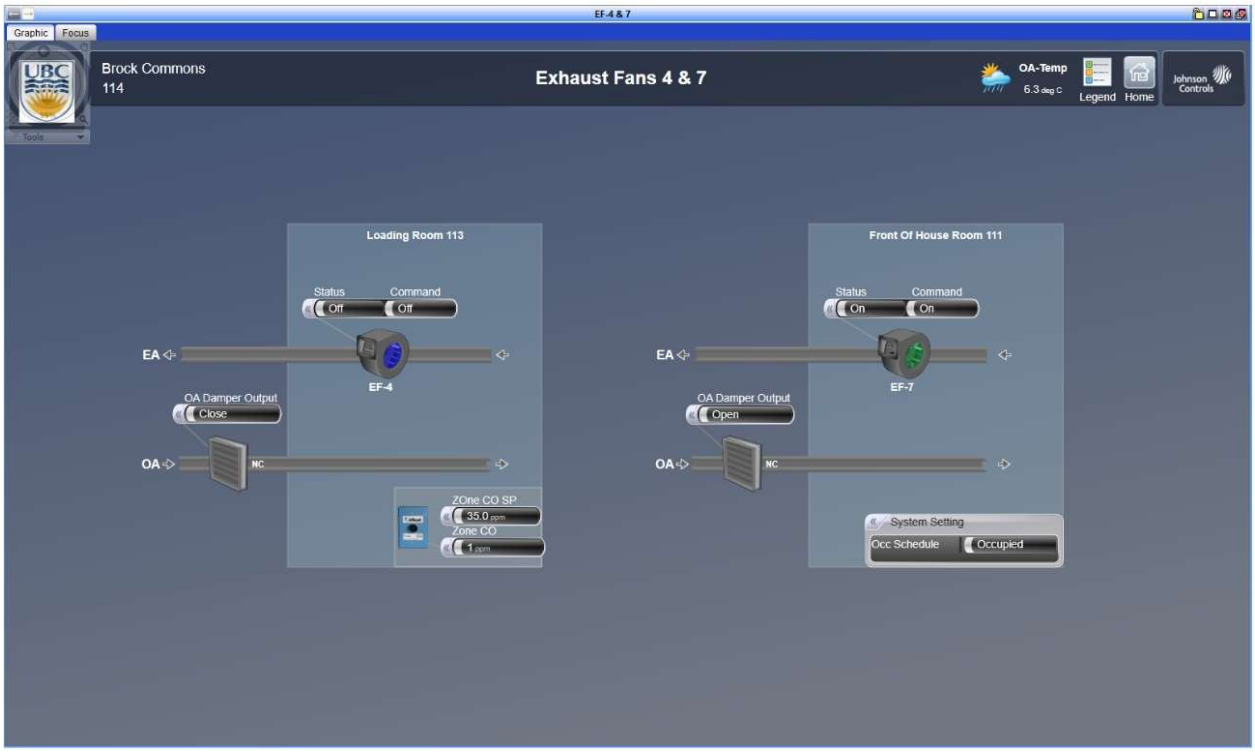

Figure 6.14. TWH BMS – EF 4 & 7 (courtesy of UBC Energy and Water Services)

The presented BMS also allows users to remotely control the different systems. Examples of the different actions that can be made are:

- Turning pumps on/off and adjusting their capacity
- Changing air setpoint
- Increasing or decreasing fan speeds

Additionally, the BMS can record performance data over an established period of time. Currently, the TWH BMS is recording the air temperature near eleven different VAV boxes. This data can be visualized in Figure 6.15.

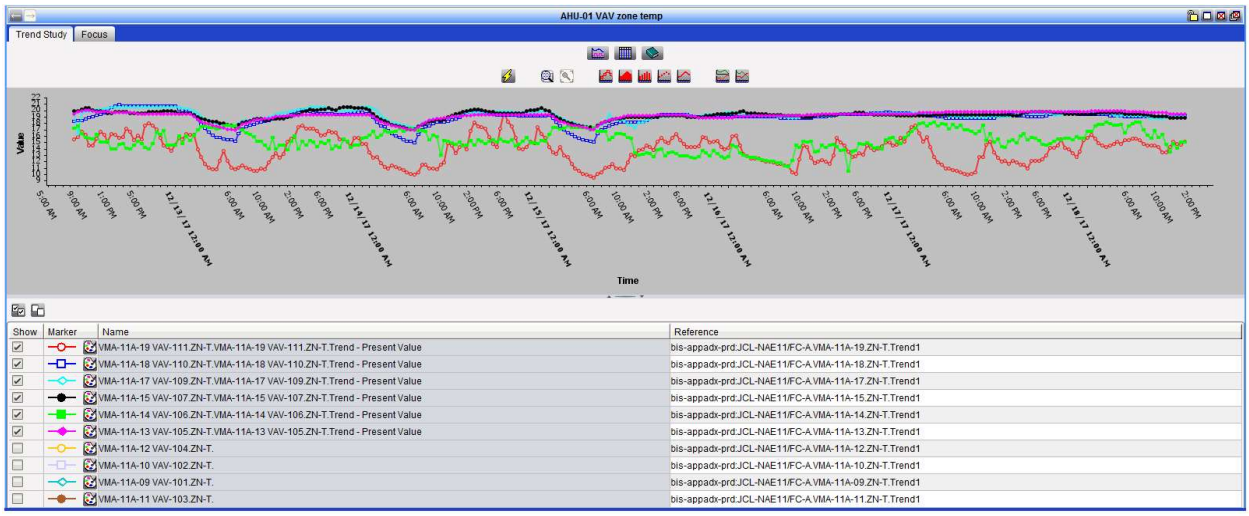

Figure 6.15. TWH BMS – air temperature trend (courtesy of UBC Energy and Water Services)

The implementation of this type of BMS is not uncommon in UBC buildings. UBC's Energy and Water Services department uses these systems to monitor building performance. A more in-depth description of the TWH BMS and its potential uses is outside of the scope of this research, but represents an opportunity for future studies, including a building performance evaluation.

Chapter 7: Discussion and Lessons Learned

The TWH employed a series of QA/QC practices to guarantee the quality of a building that employed an innovative construction method and structural elements. Some of these practices involved following well-stablished and recognized standards while others were replicable practices that were conceived by the project team. This section presents the main lessons learned and recommendations that have been identified in this study, classifying them by chapter. Most of the observed good practices are replicable and indicate that the Canadian industry is fully able to replicate a project of this nature.

7.1 Building Structure

7.1.1 Lessons Learned

1. Following industry standards was a key practice that allowed the project team to guarantee the performance of the mass timber elements.

This study found the existence of comprehensive industry standards that supported the reliable production of timber structural elements. This proved to be true even for the case of the TWH were abnormally tight tolerances and special performance requirements were necessary.

2. The level of prefabrication required high precision during manufacture and installation.

Employing prefabricated elements enabled a fast and efficient construction process. The TWH employed a level of prefabrication where each timber element and envelope panel had a predetermined position. This required additional efforts to assure that each element would properly fit in its final position. The level of precision was so high that a discrepancy of less than 10mm in the total height of the building had to be corrected at level 11. However, the employed

practices proved to be appropriate and sufficient since not a single timber element had to be trimmed or cut onsite.

3. The development and use of a detailed 3D model was a key practice that allowed the project team to develop a highly constructible design.

Besides allowing the visualization of the building before its construction, the 3D model served to identify soft and hard clashes. Additionally, unpractical working conditions were identified and solutions were found. Further studying the possible application of information models and VDC in mass-timber construction represents a significant opportunity for innovation.

4. Requiring the manufacturer and installer to maintain QA/QC logs helped to guarantee and record compliance with the project specification.

This study found that appropriate QA/QC logs were employed by the Mass Timber Manufacturer and Mass Timber Installer. These QA/QC logs helped to document the state of each element at different stages and record compliance with the project requirements. The logs also served as a communication tool between different parties and also supported the internal QA/QC practices and checks of the Mass Timber Installer and the Mass Timber Manufacturer.

5. Continuously monitoring the height of the building and compression of columns helped to avoid costly and time-consuming corrections.

The initially proposed sequencing strategy was modified by the Construction Manager to survey the height of the structure and the height of each column after the completion of each level. This was done to assess the progressive compression of the columns. This sequencing strategy

allowed to correct a height discrepancy of less than 10mm at level 11, when only a simple cut to the column connections was necessary to correct the height of the structure.

6. The timber elements proved to be resilient to mold development or being damaged by moisture.

This study found that the weather protection plan underperformed in different occasions. However, the continuous monitoring of the timber elements showed that they had an appropriate natural capacity to dry back to acceptable moisture levels. Additionally, development of mold or damage to the timber elements was never observed.

7. Having an independent party reviewing the work proved to be highly advantageous.

The TWH employed various forms of independent reviews. As examples, the weather protection plan and the moisture of the timber elements was continuously monitored by the Envelope Consultant. The shop drawings made by the Mass Timber Manufacturer were also reviewed by the Structural Engineer, the Architect and the VDC Modeler. These reviews resulted in a series of recommendations that were employed and are documented in this thesis.

8. The inclusion of mass timber elements did not require that special practices be applied in the manufacture and erection of the concrete elements.

This study found that the practices followed to manufacture and place the steel reinforcement were ordinary. The same is true for the placement procedures of cast in-place concrete.

7.1.2 Opportunities for Improvement

1. Leaving the timber elements uncovered can help to accelerate the dissipation of excessive moisture.

Covering the timber elements with concrete or gypsum affect their natural capacity to dissipate moisture. It could be advantageous to find alternative solutions to obtain appropriate levels of fire safety. Otherwise, it is important to leave the timber elements uncovered until appropriate moisture levels are reached.

2. It is recommended to replace the plywood splines used to join the CLT panels for a material with higher resistance to moisture.

Plywood splines, having small areas and being in contact with CLT panels, were in especially bad conditions to dissipate moisture. As a result, these elements were constantly found to have particularly high moisture contents, surpassing 30% and 40%. Although no damage was observed, it is advisable to take this matter into account and consider replacing plywood splines with a moisture resistant material.

7.2 Building Envelope

7.2.1 Lessons Learned

1. The designed prefabricated envelope proved to be appropriate, passing all the prescribed tests.

The envelope was tested to assess different aspects of its performance including air leakage, water penetration, and structural performance. In most cases, the test conditions exceeded the minimum requirements of the related standard.

2. The prefabricated envelope was subjected to common envelope tests. Uncommon testing procedures were not required.

Despite being an innovative prefabricated envelope, only common envelope tests were necessary to guarantee its quality. This is seen as an advantage since the Envelope Testing Agency was in full capacity to carry the tests and familiar with all the testing procedures.

3. The construction and testing of a mockup proved to be highly advantageous and allowed the project team to spot and correct issues and defects before construction.

During the installation of the mockup, deficiencies were observed and corrective actions were required. This included the use of incorrect fasteners and a poor bond between the silicone sealant and window frame. Additionally, the envelope failed to pass the first water penetration tests. The causes were identified and the envelope was fixed. Corrections included modifying the window sill and covering screw holes with sealant. Furthermore, the mockup allowed the simulation of critical design conditions, including thermal cycling and inter-story drift. Besides assessing the performance of the envelope under these demanding conditions, the specimen was retested for water penetration and air leakage to observe possible detrimental effects.

4. Onsite tests further assured the quality of the envelope and allowed the project team to correct minor deficiencies.

The reports of the onsite tests show that additional minor deficiencies were spotted and corrected, including installing three notches in the outer sill gasket as per the specifications and repairing discontinuities in vertical and horizontal sealant joints.

5. Having an independent party reviewing the work proved to be highly advantageous. Similar to the building structure, having independent parties review the work resulted in a series of recommendations that were employed and are documented in this thesis. In the case of the building envelope, the main reviewer was the Envelope Consultant. This review included assessing whether the facilities, practices, and personnel of the Envelope Contractor were suitable for the design, engineering, detailing, and fabrication of the envelope. The installation process was also constantly reviewed and allowed to correct minor defects like an insufficient amount insulation at stud cavities and missing or damaged fastener heads. This study found the review of the Envelope Consultant to be meticulous and well documented.

7.2.2 Opportunities for Future Studies

1. Assessing the long-term envelope performance and maintenance requirements. This study found all components of the building envelope to have low maintenance requirements. An additional study can assess the processes that would be required to replace damaged panels, the current processes carried out at UBC to guarantee the long-term performance of the envelope, and how these practices compare to the ones required for the TWH.

7.3 Mechanical and Electrical Systems

7.3.1 Lessons Learned

1. A comprehensive commissioning process was observed, being in compliance with LEED V4 requirements and ASHRAE recommendations.

ASHRAE Guideline 0-2013 and LEED V4 requirements for a Fundamental Commissioning and Verification and an Enhanced Commissioning were regularly used to benchmark the commissioning process conducted at the TWH. This included the generated documents, completed activities, and roles of the different members of the commissioning team. The study found the commissioning process to fully comply with LEED requirements and a general compliance with ASHRAE recommendations. Whenever discrepancies were found, the causes were assessed and are presented in this thesis.

2. An early engagement of the Commissioning Provider proved to be highly advantageous.

Besides including the expertise of a professional advocating for the owner early on, an early engagement of the Commissioning Provider allowed the construction documents to be aligned with the commissioning process. This also guaranteed a consistent message from all the sources describing the commissioning process and avoided contradictions and discrepancies between them.

3. Including all pertinent commissioning requirements in the construction documents is a fundamental step of the commissioning process.

Failure to include the commissioning requirements in the construction documents can lead to contractors being unaware of their responsibilities and roles in the commissioning process and the related costs. This can result in change orders. This study found an appropriate description of the commissioning process in the project specifications. Problems related to an ill-defined commissioning process were not observed.

4. The required modifications to the mechanical and electrical systems were not a source of uncertainty to the performance of the building.

Modifications to the building assemblies included the inclusion of flexible connections in HVAC, irrigation, and domestic water systems to account for the expected differential settlement of the structure. A second modification was the use of range hoods that filtrate and recirculate air, as opposed to exhausting air to the outside of the building. This was done to avoid penetrations through the prefabricated envelope panels. Although these modifications responded to specific characteristics of the building, the use of these elements is not uncommon in the Canadian industry and they were not a source of uncertainty. The inclusion of these elements did not require additional tests or steps in the commissioning process. Despite the inclusion of mass timber structural elements, the Commissioning Provider considers the systems of the building to be ordinary, as well as the required checks, start-ups, and tests.

7.3.2 Opportunities for Future Studies

1. Studying the full capability and possible uses of the Building Management System.

This study presented a basic description of the BMS employed in the TWH. An additional study could further explore the potential uses of this system and how it can support facility management.

2. Conducting a building performance evaluation.

This study found the TWH to have installed sensors and a Building Management System that can support the evaluation of building performance. This study can allow to benchmark the

performance of this building and compare it to other buildings with similar characteristics, such as occupancy type and schedule.

Bibliography

American Architectural Manufacturers Association. (2007). *Test method for thermal cycling of exterior walls* (AAMA 501.5-07). Schaumburg, IL.

American Architectural Manufacturers Association. (2009). *Recommended static testing method for evaluating curtain wall and storefront systems subjected to seismic and wind induced interstory drift* (AAMA 501.4-09). Schaumburg, IL.

American Architectural Manufacturers Association. (2017). *Standard test method for water penetration of windows, curtain walls and doors using dynamic pressure* (AAMA 501.1-17). Schaumburg, IL.

American National Standard Institute, & American Plywood Association. (2017). *Standard for performance-rated cross-laminated timber* (ANSI/APA PRG 320). Tacoma, WA: APA – The Engineered Wood Association.

American Society for Quality. (2018, March 18). *What Is the ISO 9000 Standards Series?*. Retrieved from http://asq.org/learn-about-quality/iso-9000/overview/overview.html

American Society of Civil Engineers. (2013). *Preparation of construction specifications for civil projects*. Reston, Virginia: The American Society of Civil Engineers. doi: 10.1061/9780784413043

American Society of Heating, Refrigerating and Air-Conditioning Engineers. (2013). *The commissioning process* (Guideline 0-2013).

Arditi, D., & Gunaydin, M. (1997). Total quality management in the construction process. *International Journal of Project Management*, 15(4), 235-243.

ASTM International. (2012). *Standard test method for determining rate of air leakage through exterior windows, curtain walls, and doors under specified pressure differences across the specimen* (ASTM E283). West Conshohocken, PA.

ASTM International. (2014). *Structural performance of exterior windows, doors, skylights and curtain walls by uniform static air pressure difference* (ASTM E330). West Conshohocken, PA.

ASTM International. (2015). *Standard test method for field determination of water penetration of installed exterior windows, skylights, doors, and curtain walls, by uniform or cyclic static air pressure difference* (ASTM E1105). West Conshohocken, PA.

ASTM International. (2016). *Standard test method for water penetration of exterior windows, skylights, doors, and curtain walls by uniform static air pressure difference* (ASTM E331). West Conshohocken, PA.

ASTM International. (2017). *Standard practices for air leakage site detection in building envelopes and air barrier systems* (ASTM E1186). West Conshohocken, PA.

Binational Softwood Lumber Council, & Forestry Innovation Investment. (2014, March 15). *Summary report: survey of international tall wood buildings*. Retrieved from https://www.naturallywood.com/sites/default/files/documents/resources/survey-of-international-tall-wood-buildings.pdf

Centre for Interactive Research on Sustainability (2017). *Brock Commons Tallwood House Construction Overview*. University of British Columbia. Retrieve from https://www.naturallywood.com/sites/default/files/documents/resources/brockcommons_constructionoverview_web.pdf

Chini, A., & Valdez, H. (2003). ISO 9000 and the U.S. construction industry. *Journal of Management in Engineering*, 19(2), 69-77.

Construction Specifications Institute. (2011). *The CSI construction specifications practice guide*. Hoboken, N.J: Wiley.

CSA Group. (2014). *Concrete materials and methods of concrete construction / Test methods and standard practices for concrete* (CSA A23.1/A23.2). Mississauga, Ontario: CSA Group

CSA Group. (2015). *Qualification code for manufacturers of structural glued-laminated timber* (CSA O177).

CSA Group. (2016). *Structural glued-laminated timber* (CSA O122). Toronto, Ontario: CSA Group

CSA Group. (2016). *Welding of reinforcing bars in reinforced concrete construction bundle* (CSA W186). Mississauga, Ontario: CSA Group

CSA Group. (2017). *Engineering design in wood* (CSA O86). Mississauga, Ontario: CSA Group

d'Errico, H. (2016). *Tall, cross-laminated and massive timber buildings: a United States perspective*. (Unpublished master's thesis). Mississippi State University, Mississippi.

Din, S., Abd-Hamid, Z., & Bryde, J. (2011). ISO 9000 certification and construction project performance: the Malaysian experience. *International Journal of Project Management*, 29(2011), 1044-1056.

Emmit, S. (2001). Observing the act of specification. *Design Studies*, 22(2001), 397-408.

Fallahi, A. (2017). *Innovation in hybrid mass timber high-rise construction: A case study of UBC's brock commons project*. (Unpublished master's thesis). University of British Columbia, Vancouver, B.C.

Fallahi, A., Poirier, E., Moudgil, M., Tannert, T., & Staub-French, S. (2016). *UBC Tall Wood House case study (design and pre-construction phase)*. Vancouver, B.C.: UBC BIM TOPiCS LAB.

Federal Emergency Management Agency. (2000). *Recommended specifications and quality assurance guidelines for steel moment-frame construction for seismic applications*. SAC Joint Venture.

Goldbloom, J. (1989). *Engineering Construction Specifications*. New York, NY: Van Nostrand Reinhold.

Green, M., & Karsh, E. (2012). *The Case for Tall Wood Buildings*. Mgb Architecture + Design, 22–23.

Grondzik, W. T. (2009). *Principles of building commissioning*. Hoboken, NJ: John Wiley & Sons.

International Organization for Standards. (2015). *Quality management systems – Fundamentals and vocabulary* (ISO 9000:2015).

Jiang, H. (2011). Technical assurance for construction quality management. *Applied Mechanics and Materials*, 71(78), 3397-3400.

Jraisat, L. (2014). Quality in construction management: an exploratory study. *International Journal of Quality and Reliability Management*, 33(7), 920-941.

Kam, C., & Tang, S. (1997). Development and implementation of quality assurance in public construction works in Singapore and Hong Kong. *International Journal of Quality and Reliability Management*, 14(9). 909-928.

Lam, P., Kumaraswamy, M., & Ng, T. (2004). The use of construction specifications in Singapore. *Construction Management and Economics*, 22(10),1067-1079.

Mayo, J. (2015). *Solid wood case studies in mass architecture, technology and design*. New York, NY: Routledge.

McCabe, S. (2017). *Quality improvement techniques in construction*. New York, NY: Routledge.

Mohammadi, M., & Ling,L. (2017). Can wood become and alternative material for tall building construction?. *Practice Periodical on Structural Design and Construction*, 22(4), 04017014.

Moudgil, M. (2017). *Feasibility study of using cross-laminated timber core for the UBC Tall Wood Building*. (Unpublished master's thesis). University of British Columbia, Vancouver, B.C.

National Lumber Grades Authority. (2014). *2014 standard grading rules for Canadian lumber*. Vancouver, B.C.

O'Brien, J. (1997). *Construction inspection handbook: total quality management*. Norwell, Massachusetts: Chapman & Hall.

Office of Housing and Construction Standards. (2012). *British Columbia Building Code 2012*. Victoria, B.C.

Office of Housing and Construction Standards. (2015). *Building Act Guide Series: Section A1*. Victoria, B.C.

Office of Housing and Construction Standards. (2015). *Building Act Guide Series: Section A2*. Victoria, B.C.

Rajendran, S., Clarke, B., & Andrews, R. (2012). *Quality management in construction. Professional Safety*, November(2012), 37-42.

Reinforcing Steel Institute of Canada. (2018, February 11*). Reinforcing steel manual of standard practice*. Retrieved from https://rebar.org/standards-practice-manual/

Sherrat, F. (2015). *Introduction to Construction Management*. New York, NY: Routledge.

Smith, R., Griffin, G., Rice, T., & Hagehofer-Daniell, B. (2018). Mass timber: evaluating construction performance. *Architectural Engineering and Design Management*, 14(1-2), 127-128.

Tang, S., Ahmed, S., Aoieong, R., & Poon, S. (2005). *Construction quality management*. Hong Kong, Jong Kong.

Transportation Research Board. (2013). *Glossary of Transportation Construction Quality Assurance Terms*. Washington, DC.

Turk, A. (2005). ISO 9000 in construction: an examination of its application in Turkey. *Building and Environment*, 41(2006), 501-511.

U.S. Army Corps of Engineers. (2004). *Construction quality management for contractors*. Huntsville, AL.

U.S. Green Building Council. (2014). *LEED V4 user guide*. Retrieved from https://www.usgbc.org/resources/leed-v4-user-guide

Van De Kuilen, J., Ceccotti, A., Zhouyam, X., & Minjuan, H. (2011). Very tall wood buildings with cross laminated timber. *Procedia Engineering*, 14(2011), 1621-1628.

Appendices

Appendix A Envelope Testing History

Date	Test	Event	Notes
May 11/16	Positive Preload @ 958 Pa	No deformation	n/a
	Static Air Infiltration @ 300 Pa #1	Pass	n/a
	Static Water Infiltration @ 600 Pa #1	Leakage from 4-way joint between wall and window wall panel sections on east face (in relation to the drawing). Also leakage on the same face, from within the cavity below the fixed.	Re-sealed with silicone from the exterior side.
May 13/16	Static Water Infiltration @ 600 Pa #1 – Re-test	Leakage from the bottom of the south (in relation to the drawing) face between the wall panel and window wall panel section.	After some investigation and discussion it was decided a different sealing detail was to be used. Current modifications served more as a "band-aid" fix, however in order to make the proper modification, the panel sections to be removed and disassembled. As this was not a practical solution at the time, it was decided that the testing was to continue forward.
	Dynamic Water Test #1	Pass	n/a
	Structural – 100% of Design +1916 Pa / -1916 Pa	Pass	n/a
	Interstory Drift – Lateral 6 mm displacement	Pass	n/a
	Interstory Drift – Vertical 16 mm displacement	Pass	n/a
May 16/16	Static Air Infiltration @ 300 Pa #2	Pass	n/a
	Static Water Infiltration @ 600 Pa #2	In addition to the leakage in Test #1, glazing leakage was observed from the fixed lites below the awning.	Phoenix Glass had removed and re-glazed all lites. The drainage into the jamb/mullion from the sash frame housing was sealed off and the exterior most weather-strip was notched out approx. 1" wide near the corners along the bottom rail. It was also noted that the drainage holes for the lower fixed cavities were partially obstructed by the exterior sealing detail.

Figure A.1. Envelope testing history (courtesy of Centura Building Systems Ltd.)

May 20/16	Structural – 100% of Design +1916 Pa / -1916 Pa – Re-test	Pass *pressure loaded only	*note – re-testing was to begin back at the Structural @ 100% DP with the exception of the air leakage test which was known at the time to not fail.
	Interstory Drift – Lateral 6 mm displacement – Re-test	Pass	n/a
	Interstory Drift – Vertical 16 mm displacement – Re-test	Pass	n/a
	Static Water Infiltration @ 600 Pa #2 – Re-test	Pass *with the exception of what was noted from test #1	n/a
May 25/16 – Jun 3/16	Thermal Cycling	Condensation was observed during the -9°C hold cycle at the lower corner area, both on top of the window sill and within the wall cavity below. Small to trace amounts of condensation was also observed around the lower vertical window mullion area on the south face (in relation to the drawing) on top of the steel stud track.	The condensation at the corner was localized to the lower 3ft section of the first floor. A temperature probe was used in the area and was found to be much colder than the immediate surrounding area. Further investigation would reveal gaps/missing insulation in the lower areas under the exterior paneling below the windows. Another thought was that because the lower HSS level was not fully protected from the weather that it could have aided in some thermal transmittance.
Jun 21/16	Static Air Infiltration @ 300 Pa #3	Pass	n/a
	Static Water Infiltration @ 600 Pa #3	Pass	n/a
	Structural – 100% of Design +1916 Pa / -1916 Pa	Pass *pressure loaded only	n/a
	Structural – 150% of Design +2874 Pa / -2874 Pa	Pass	n/a
	Interstory Drift – Lateral 70 mm displacement	Pass	There was movement from one of the brackets however it was discovered that the mounting bolts had not been tightened down properly.

Figure A.1. Envelope testing history (courtesy of Centura Building Systems Ltd.)

Appendix B

B.1 Test: Emergency Pressurization System (June 15, 2017)

As shown in Figure B.1, the TWH counts with two independent staircases. The staircases function as evacuation paths in case of a fire emergency and count with an Emergency Pressurization System (EPS). The EPS system counts with two pressurization fans, each one serving one of the staircases. Both fans become active in case of a fire emergency, blowing air into the staircases. The entrance of air creates a positive pressure, meant to maintain the area free of smoke while occupants escape, even when doors are open. However, this same differential pressure increases the strength that is needed to open the accessing doors. Therefore, the Emergency Pressurization System requires to be balanced and tested to provide adequate escaping conditions.

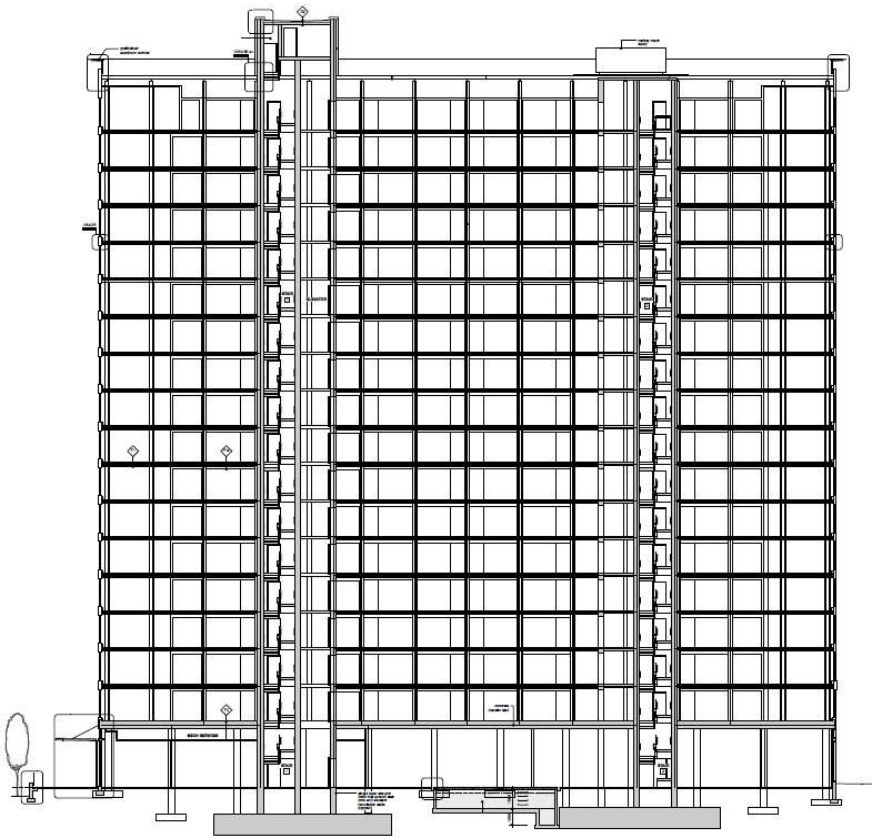

Figure B.1. TWH staircases (courtesy of Urban One Builders)

The test was performed by the mechanical contractor, in the presence of the Commissioning Provider. The configuration of the staircases and the EPS are typical for high-rise building and, therefore, the testing procedure was also typical. The acceptance requirements for this system are set in the British Columbia Building Code (see reference sections B-3.2.6.2.(3) & 3.4.6.16.). The code requires a minimum differential pressure of 12 Pa, while recommending to maintain the necessary force to open the doors below 90 N.

To perform this test, the necessary force to open the doors was measured with a basic force gauge (Figure B.2). The test was repeated at each level, measuring the opening force of each door. Most doors complied with the acceptance requirement with some observed exceptions. All cases of non-compliance were further investigated, with deficiencies in the installation of doors being observed as the common cause. These doors were observed to be in contact with the door-frames, creating friction that effectively increased the necessary force to open them. To solve this issue, the subcontractor in charge of installing the doors was contacted and the problem was solved. Regarding the positive pressure, readings were made at the top and bottom of the building using a manometer (Figure B.2). Both readings indicated a pressure higher than the minimum value of 12 Pa.

Figure B.2. Basic force gauge and manometer used for EPS testing

Finally, to guarantee that a constant positive pressure is being generated along the staircases, an anemometer was used to measure the air flow across all the outlets of air of the EPS system (Figure B.3). The procedure showed similar air flows across all outlets.


Figure B.3. Anemometer used for EPS testing

B.2 Test: Chlorine Test (June 22, 2017)

In order to clean the domestic water pipes before occupancy, a chlorine test was carried. This test is a standard practice in the industry that is performed by dissolving a high-chlorine concentration substance (Figure B.4) in the domestic water system. In the case of the TWH, the injection point was right after the city water inlet, in Mechanical Room 2 (Figure B.4).

Figure B.4. High-chlorine substance and injection point

The test is then fairly simple, consisting on progressively opening the different water outlets (kitchen and bathroom taps, showers, flushing toilets) floor by floor and waiting for 5-8 minutes to assure a complete flush (Figure B.5).

Figure B.5. Domestic water system flush

After this, a sample of the water at the outermost point of the system is collected and taken to a laboratory. The sample was collected and the results showed that the practice was successful, with the quality of water being suitable to begin occupancy.

Additionally, during this test, it was observed that an unnormal amount of time was required for the domestic water to heat up in certain areas of the building. The cause was attributed to a balancing issue in the domestic hot water system. The mechanical subcontractor was contacted to solve the issue.

B.3 Test: Fire Storage Tank (June 23, 2017)

The Site Specific Regulations (SSR) that were developed to allow the construction of the TWH, required a minimum of 19 m^3 of reserve water to be stored onsite. This water had to be stored with the unique purpose of feeding the sprinkler system in case of an interruption in the public water supply. To comply with this requirement, a Fire Storage Tank (FST) was designed and constructed in the ground floor, located underneath Mechanical Room 1 and Mechanical Room 2, as indicated in Figure B.6.

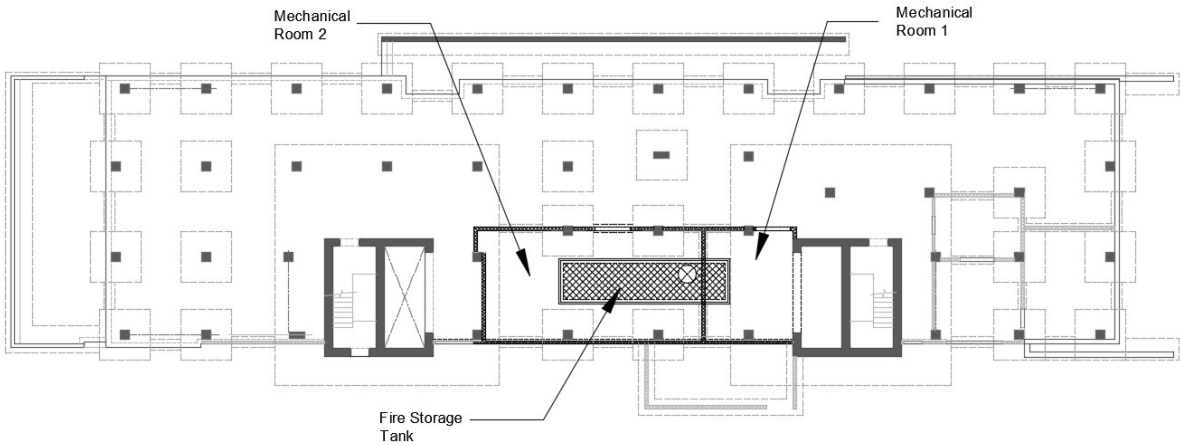

Figure B.6. Fire storage tank location (courtesy of Urban One Builders)

According to UBC Housing and Hospitality Services, the TWH is the only building on campus that counts with this type of water reserve. Therefore, a special level of attention was given to this element during commissioning, assuring an appropriate performance and providing UBC and the building operators with all the required information and training to operate and maintain the tank. However, the commissioning authority mentioned that the inclusion of a fire storage tank in high-rise buildings is not a rare practice in Canada. The designed tank exceeds the capacity requirement of 19 m^3, having a total storage volume of 21.6 m^3. A plan and section view of the tank are presented in Figure B.7 and Figure B.8.

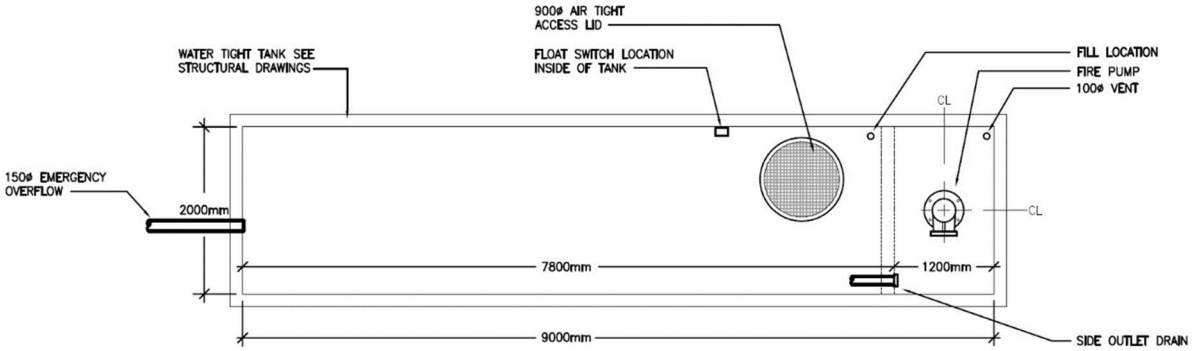

Figure B.7. Plan of fire storage tank (courtesy of Urban One Builders)

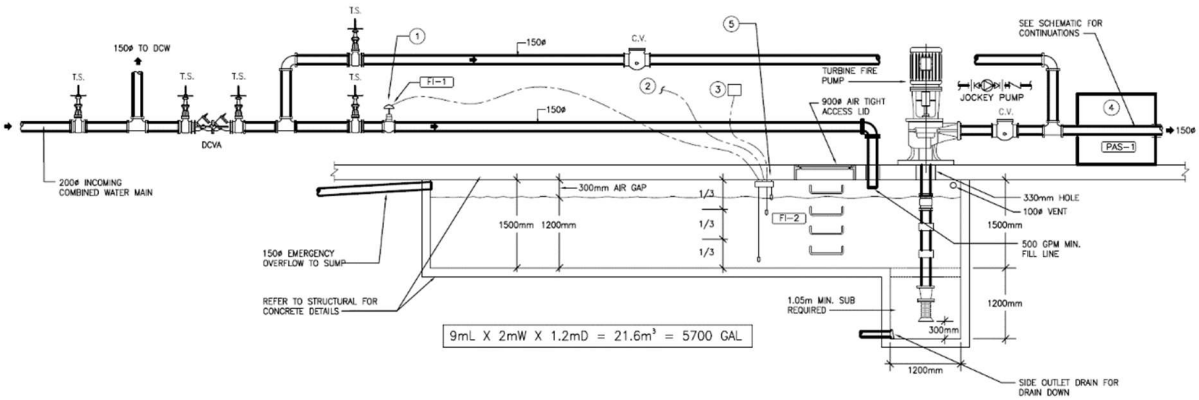

Figure B.8. Section of fire storage tank (courtesy of Urban One Builders)

The test was performed by the mechanical contractor, in the presence of the mechanical commissioning agent and the Commissioning Provider. To test the tank, valves were used to redirect the water away from the sprinkler system and drive it to the outside of the building. As it can be seen in Figure B.9, the tank has three floaters. Each floater sends a signal once they register a change in the water-level. The uppermost floater shows that the tank is full and stops the feeding pipe. The second floater indicates that an important quantity on water has been used and activates the feeding pipe to fill the tank. The lowest floater indicates a low water level that should never be reached, indicating that an issue exists in the feeding system.

Figure B.9. Fire storage tank floaters

When the test begun, the tank was full and ready to operate. The test sequence was as follows:

- Water was progressively evacuated form the tank and the water level was let to decrease. Once below the level of the second floater, the system responded as expected and the feeding pipe was activated.
- The inlet of water increased the water level, until the level of the uppermost floater was reached. The system responded as expected, with the uppermost floater sending a signal that deactivated the feeding pipe.
- To check the responsiveness of the lowest floater, the feeding pipe was purposely disactivated and the tank was emptied. Once the water level reached the level of the lowest floater, the system emitted an emergency signal, indicating issues with the feeding system. This signal was successfully recorded by the control panel at the entrance of the building.

However, issues were observed with the feeding pipe. The pipe has a diameter of 6 inches and operates at the city water pressure. This resulted in an aggressive inlet of water that created turbulence inside the tank as shown in Figure B.10.

Figure B.10. Fire storage tank turbulence

As a result, the floaters were excessively pushed, causing the wires to intertwine (see Figure B.11). The testing team believed that this issue could result in a malfunction of the system and, therefore, it had to be addressed.

Figure B.11. Observed issues - fire storage tank turbulence

To solve this issue, three rods were welded to a metallic piece inside the tank and used to secure the floater in place. The changes were made and the system re-tested, with the observed issues being eliminated.

B.4 Test: Backup Power Generator (June 28, 2017)

The TWH counts with a backup power generator, meant to provide the building with energy in case of a black-out. The generator is especially important because, in case of an emergency that involves a blackout, it would maintain operational the systems that support the building in case of a fire or that help occupants to evacuate the building. According to the Commissioning Provider, the backup power generator and the way that it operates and supports the building is ordinary and did not require any modification due to the inclusion of mass timber elements in the construction of the building.

The test was run by the electrical and mechanical contractors, in the presence of the Commissioning Provider. The test was meant to verify an appropriate response and functionality of the building in case of a blackout. At this specific date, three different elements were tested:

- The Emergency Pressurization System (EPS).
- The elevators.
- The magnetic locks located at the lobby door.

First, the three elements were set to be powered exclusively by the generator. All elements were observed to be working properly without any observed issues. Then, a fire was simulated using a magnet to activate the smoke detection devices. Under these conditions, the EPS is supposed to start operating, with the stairwell pressurization fans turning on and reaching their respective operating frequency. To set and monitor the frequency of the fans, the EPS counts with two general purpose inverter drives (Figure B.12). Before simulating fire conditions, the drives

correctly indicated that the fans were static. After simulating fire conditions, both fans progressively increased their operating frequency at an approximate rate of 1HZ per second.

Figure B.12. General purpose inverter drives of SF-1 & SF-2.

As it can be seen in Figure B.12, each fan has its own operation frequency, being 50HZ for SF-1 and 35HZ for SF-2. This responds to subtle differences in the staircases. For example, wider opening underneath the doors increase the airflow that is required to maintain the required differential pressure. At the end, both fans were observed to work properly.

Continuing with the test, an appropriate functionality of the elevators under fire conditions was assessed. In case of a fire, the elevators are supposed to interrupt their normal operation and release all occupants in the ground floor (or the second floor if the fire is registered in the ground floor), after releasing the occupants they should close and remain inactive. Elevator 2, however, malfunctioned. The elevator failed to close after releasing the occupants. It is unclear whether this was due to problems in the configuration, or if the mechanical lock of the door was malfunctioning (probably due to dust). The trade in charge on the elevator was called to be on

site and fix the issue the next day. The problem was fixed and the elevators were observed to work properly.

Finally, the magnetic locks were also tested. In a fire emergency, they are supposed to be de-energized, releasing the lock and allowing people to escape. Fire conditions were simulated and the locks were observed to function properly.

B.5 Test: Fire Pump (June 28, 2017)

To supply the sprinkler system with water from the Fire Storage Tank, the TWH counts with a fire pump located in Mechanical Room 2. A schematic view and a picture of the pump are showed in Figure B.13.

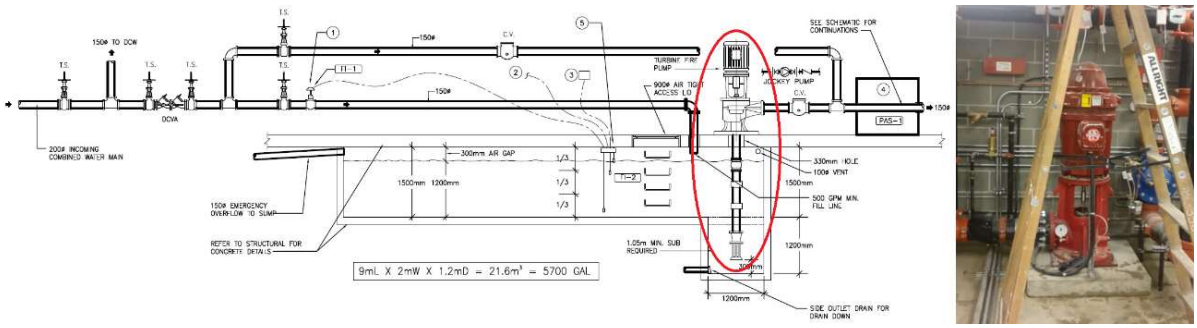

Figure B.13. Section of fire storage (courtesy of Urban One Builders)

The pump counts with an electric controller (Figure B.14) that can be used to monitor the state of the pump and operate it. To run this test, valves were used to create a closed loop and the pump was left to circulate water through it. The pump was visually inspected, as well as the electric controller.

Figure B.14. Electric fire pump controller

The test was performed by the mechanical contractor, in the presence of the Commissioning Provider (Figure B.15). The pump was set to operate at 250 gallons per minute without presenting any issues. The electric controller, however, was needlessly activating the backup power generator. To maintain the pump running, the generator is supposed to be activated only if a drop of voltage occurs, which was not the case during the test. After detecting this issue, the mechanical contractor provided the pertinent technicians to solve the problem.

Figure B.15. Fire pump test

Additionally, openings were observed surrounding the pipes that penetrate the water tank (Figure B.16). This issue had to be addressed to avoid having dust and other matter entering the tank, which could potentially affect the pump. The Commissioning Provider took note of this issue, scheduling for the tank to be cleaned in the future and these openings to be sealed.

Figure B.16. Fire storage tank – openings surrounding pipes

B.6 Test: Building Management System (July 07, 2017)

The TWH counts with a Building Management System (BMS) that is described in Chapter 4. As part of the commissioning process, the BMS was tested in several occasions to verify that it was accurately reporting the state of the different systems in the building and that it was able to control them remotely. In this specific occasion, the interaction between the BMS and the pumps that feed the HVAC system with hot water was tested. A schematic view is presented in Figure B.17.

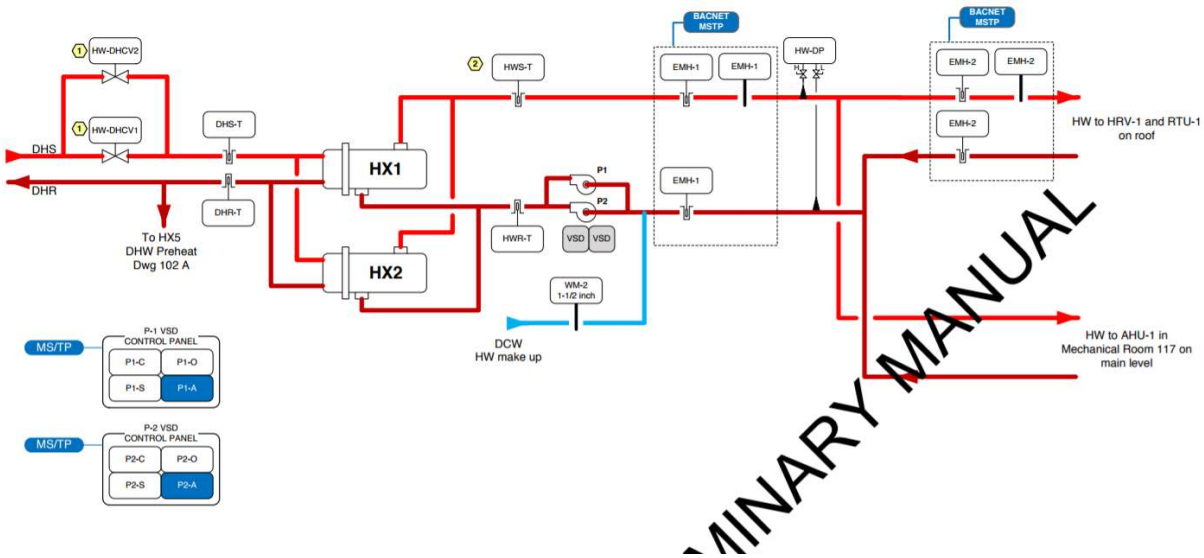

Figure B.17. HVAC hot water supply – schematic view (courtesy of Zenith Commissioning)

As it can be seen in Figure B.17, pumps P1 and P2 are connected in a parallel configuration and are the ones in charge of serving this system. Although only one pump is needed for operation, a second pump was installed to provide redundancy and serve as a backup. Normally, the BMS systems identifies P1 as the main pump and P2 as a backup pump. However, it is possible to remotely reconfigure the system and set P2 as the main pump. This reconfiguration was tested and it was observed that the system successfully switched from one pump to another.

Additionally, P2 was manually turned off to observe if an alarm signal would successfully trigger and be displayed in METASYS. The system responded accordingly and an alarm signal was displayed. While the alarm signal persists, the system will maintain the related pump inactive. After turning P2 back on, the system responded as expected by not eliminating the alarm status. Once an alarm status is registered, the status will persist until it is changed manually. The system does this to prevent further damage on a pump that is showing operational problems, guaranteeing that it has been checked before resuming its operation. The alarm status was eliminated using the visual interface of METASYS and the pump became operational once again. As a third check, the primary pump was manually turned off. The systems responded accordingly by emitting an alarm signal and switching the backup pump to the primary role.

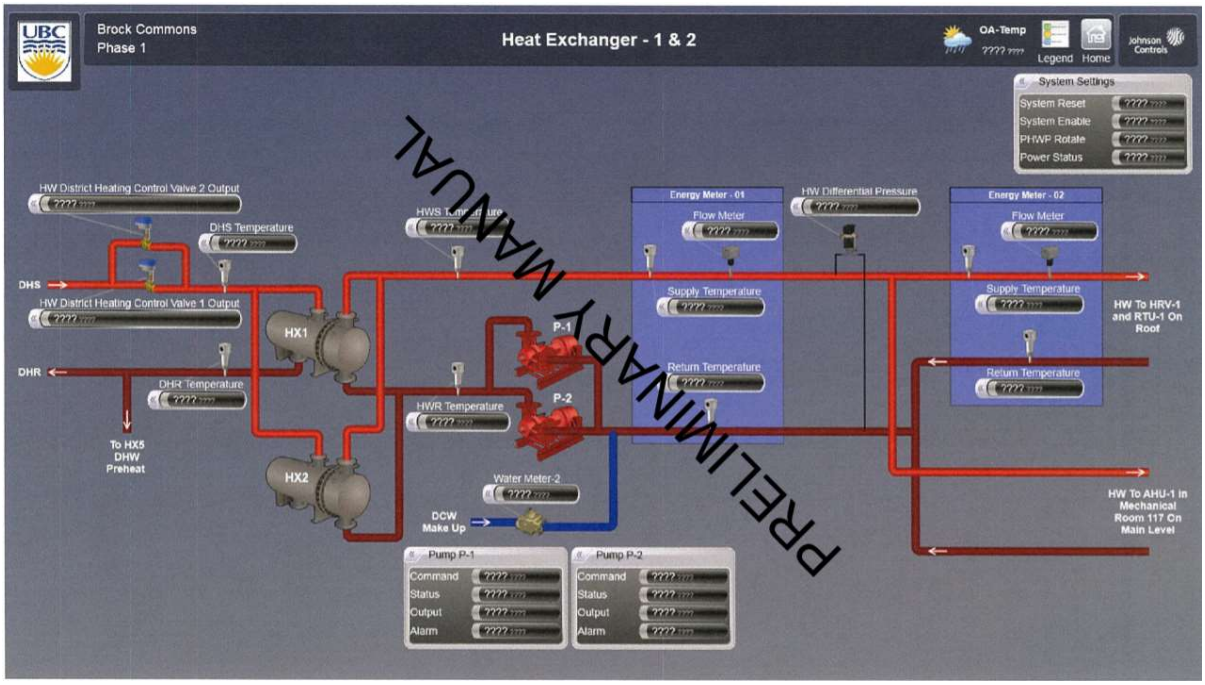

Figure B.18. METASYS visual interface of the HVAC hot water supply (courtesy of Zenith Commissioning)