HYBRID ELECTRIC HAULAGE TRUCKS FOR OPEN PIT MINING

by

EHSAN ESFAHANIAN

B.A.Sc., The University of British Columbia, 2008

A THESIS SUBMITTED IN PARTIAL FULFILLMENT OF

THE REQUIREMENTS FOR THE DEGREE OF

MASTER OF APPLIED SCIENCE

in

THE FACULTY OF GRADUATE AND POSTDOCTORAL STUDIES

(MINING ENGINEERING)

THE UNIVERSITY OF BRITISH COLUMBIA

(Vancouver)

July 2014

ABSTRACT

Hybrid Electric Vehicles (HEVs) improve fuel economy by taking advantage of the peak efficiency operating envelope of the Internal Combustion Engine (ICE), together with an energy storage system to supply drive power when the ICE has lower efficiency. They also attempt to minimize engine idling. To achieve this improvement, a hybrid design requires an ICE, a generator/motor, motor controllers, and an electric energy storage system (battery or ultra-capacitor) which are connected together in various ways such as Series, Parallel, and Series-Parallel configurations.

Multiple strategies have been developed to manage energy use by hybrid electric vehicles in which decisions are made based on input variables such as battery state of charge, driver torque demand, vehicle speed, and transmission gear. For example, as the state of charge of the battery decreases, it becomes more costly to use electricity, and so, the control system tends to transition the power source from battery to fuel.

Although diesel-electric mine haulage trucks are in use today, energy storage is not a feature of these systems. Such trucks are typically arranged in a Series configuration in which the engine is completely decoupled from the wheels and used to provide electric energy through a generator to power electric motors on each wheel. The lack of a battery pack is a lost opportunity to improve fuel economy through regenerative braking and/or engine-off operation. This thesis discusses the fuel economy question with respect to road topography and distance data, conditions that can be predicted for mine haulage with relative

ease. Access to such data in real-time can be put to advantage to maximize fuel economy on a given cycle. This thesis finds the HEV system can provide fuel savings due to 1) elevation change and 2) engine Brake Specific Fuel Consumption (BSFC) optimization on the order of 22 per cent on a typical open pit mine, which for a haul truck can provide substantial cash flow returns in addition to paying off for the extra capital cost of the hybrid electric system.

PREFACE

Figures 1, 2, 3, 4, 5, and 9 were used or modified by permission from applicable sources. The rest of this thesis is an original intellectual product of author Ehsan Esfahanian.

TABLE OF CONTENTS

LIST OF TABLES

LIST OF FIGURES

1. INTRODUCTION

Hybrid Electric Vehicles (HEVs) have become popular alternatives to conventional vehicle since they reduce total greenhouse gas emissions and fuel consumption. The technology improves fuel economy by taking advantage of the peak efficiency operating envelope of the Internal Combustion Engine (ICE) to charge an energy storage system to provide electric drive power when the engine is operating at a lower efficiency. According to Vyas et al., (1997), electric drive systems have many advantages: very high efficiency, no energy consumption when idling, and deployment of regenerative-braking to capture the energy usually lost when braking. The hybrid electric power-train technology has mainly been implemented for passenger vehicles and small-to-medium-size trucks. The technology has yet to emerge as commercially available in very-large trucks such as haulage trucks used in open pit mining. Although commercially-available mine haulage trucks incorporate electric drives into their power-train such as the 960E offered by Komatsu, the 795F AC model from Caterpillar Inc., the EH4000ACII – 220-t class truck launched in 2012 by Hitachi, and Liebherr's 363t T282 truck (Moore, 2011), none of these trucks provide the full fuel-saving potential of hybrid electric systems due to the lack of an energy storage system.

In 2008, GE Transportation teamed-up with Komatsu and the U.S. Department of Energy to develop the world’s first and only hybrid electric drive system on a 240-ton mining haul truck (Ng, 2009). According to Ng, the truck provided a fuel savings of up to 10% and increased speed on grade with a power boost up to 20% which will reduce cycle times.

This thesis discusses the incremental fuel economy improvement in a hybrid electric mining haul truck that derives from Brake Specific Fuel Consumption (BSFC) optimization of the ICE, and regenerative braking on downward travel. The research also addresses some of the risks involved with implementing these systems. The critical question of the research is "Do the benefits of such hybrid-electric systems outweigh the risks and costs of implementation?"

2. LITERATURE REVIEW

HEVs became commercially available in the late 1990s with the introduction of Toyota's Prius passenger vehicle launched in Japan in 1997. According to Wouk (1997), it took HEVs about a century after they were first conceived to hit the commercial market from a major automaker. The 100-year delay included more than 25 years of development and $1 billion dollars in research expenditures (Wouk, 1997). With the continually increasing gas prices these days and the development of ever-improving electrical components, HEVs have become a popular alternative to conventional vehicles during the past decade. This section presents an overview of technological advancements in this "green" sector.

2.1 Efficiency Performance

Hybrid electric vehicles use fossil fuels more efficiently than conventional vehicles. They do this by shifting the operation of the internal combustion or diesel engine to more efficient operating points and capturing some of energy normally lost through brakes on a conventional vehicle. According to Gao and Winfield (2012), a comparison of two similarly-sized vehicles manufactured in 2011-2012 showed that a hybrid vehicle is 96, 41, and 72 per cent more efficient for city, highway, and combined driving respectively. The improvement for city driving is most pronounced as the hybrid burns nearly half the amount of gas used by the conventional counterpart, providing the potential to pay off the additional cost of owning a hybrid and providing a cheaper commute past the breakeven point. This depends on factors

such as distance and conditions of the daily commute, the cost of fuel, and the difference in purchase price of the hybrid and non-hybrid counterpart.

2.2 Advancements in Energy Storage Systems

In recent years, portable energy storage has become an important area of investigation due to the emergence of a large number of portable electronics and gadgets that require batteries to operate. As well, a new application for energy storage is evidently important with the introduction of hybrid electric and fully-electric vehicles. In all of these applications, requirements can vary widely with parameters such as energy density, capacity, discharge power, and charge power for the energy storage system resulting in many new technologies being researched to address these requirements. This section provides an overview of some different technologies in energy storage systems.

2.2.1 Batteries

The technological advancement of lithium batteries have dominated the field of energy storage which has led to the replacement of many other types of batteries in many applications, particularly those with high energy capacity and power demands such as the transportation industry. The efforts in these advancements have been driven in part by the requirements for higher energy density batteries for use in compact electronics. In lithium ion batteries, as the name suggests, lithium ions that travel between the cathode (negative electrode) and the anode (positive electrode) through a non-aqueous electrolyte, which according to Nazri and Pistoia (2009), allows for higher cell voltages (~4V), makes these

cells more energy dense than lead-acid, nickel-cadmium, and nickel-metal hydride batteries , and also widens the operational temperature range. The original lithium ion batteries consisted of lithium-metal anode which caused the formation of dendrites and very reactive powder deposits on the anode during recharging and the safety issues associated with these systems shifted the research attention to the use of a lithium-intercalation material such as graphite for the anode (Yoshio, Brodd, & Kozawa, 2009). Table 1 shows properties of some different materials used as cathode. Today the term “lithium-ion” is accepted worldwide for this technology despite the fact that there is no lithium metal in the cells (barring any lithium metal deposits formed at the electrodes) and lithium ions are inserted into and retracted from the active materials at both electrodes (Yoshio, Brodd, & Kozawa, 2009).

Table 1: Properties of different cathode materials used in lithium-ion batteries (Yoshio, Brodd, & Kozawa, 2009)

Cathode Material	Energy Density (mAh/cm^3)	Safety	Cost
$LiCoO_2$	808	Fair	High
$LiNiO_2$	1056	Poor	Fair
$LiNi_{0.8}Co_{0.2}O_2$	873	Fair	Fair
$LiNi_{0.8}Co_{0.15}Al_{0.05}O_2$	960	Fair	Fair
$LiMn_{0.5}Ni_{0.5}O_2$	752	Good	Low
$LiMn_{1/3}Ni_{1/3}Co_{1/3}O_2$	940	Good	Low
$LiMn_2O_4$	462	Good	Low
$Li_{1.06}Mg_{0.06}Mn_{1.88}O_4$	420	Good	Low
$LiFePO_4$	592	Good	Low

Nazri and Pistoia (2009) presented a chart that compared energy densities of different cells. The gravimetric and volumetric energy densities of lithium ion batteries were shown to average about 150Wh/kg and 300Wh/L respectively. Energy density refers to the available energy storage capacity per unit mass or volume of battery. These are approximately 3-4 and 1.5-4 times as large as those of other battery types respectively. This advancement has opened up a major avenue of opportunities for more compact portable electronics and for electric vehicles. Traditionally, electric vehicles have been powered by lead acid or nickel-cadmium batteries which have suffered from impractical low range and low public acceptability (Nazri & Pistoia, 2009).

However, energy density is not the only issue. Power requirements are also a major hurdle for vehicular applications. A battery may have enough energy to provide a long range, but it must also be able to release this energy (discharge) at a high-enough rate for the vehicle to drive with similar response to that of a conventional gas-powered vehicle. This becomes particularly important during acceleration and hill-climbing especially for heavy vehicles such as open pit mining haulage trucks if they are to be powered by batteries. This property is characterized as the Power Density which specifies the available discharge power per unit mass of the battery. Nazri and Pistoia, (2009) quantified a power density of 370W/kg for Li-batteries in comparison to 75, 120, and 170 W/kg for lead acid, nickel-cadmium, and nickel-metal hydride batteries, setting the lithium ion battery far ahead of its traditional competition. A key bottleneck in the challenge of using lithium ion batteries in an electric vehicle application is the charge power limit. One may think that batteries can be charged at the same

rate as they can be discharged. This is not the case as can be seen by the long time it takes to fully-charge current commercially available electric vehicles. In a Nissan Leaf for example, a full battery can be depleted in just over an hour in highway-driving. However, it takes it about four hours to fully-charge with an optional high power charger and about 8 hours with a regular charger[1]. This plays a major role in public acceptance of electric vehicles at this time. According to Vlad, et al., (2014), fast charging of lithium ion batteries causes rapid degradation of the battery components and presents a fire hazard because of local over-potential build-up. This can cause long charge times for electric vehicles as well as limiting the level of regenerative braking which can provide major fuel savings. Hence in almost all hybrid-electric and fully-electric vehicles today, the mechanical brakes are regularly engaged to decelerate the vehicle (which dissipates the excess power that the battery can't handle into waste heat).

2.2.2 Supercapacitors

Another type of energy storage system, is electrochemical capacitors, which as the name suggests is a giant capacitor that stores energy either by accumulation of ions on the electrode surface (double-layer supercapacitor) or by fast surface redox reactions (pseudo-capacitors). Supercapacitors can be fully-charged or fully-discharged in seconds and they

[1] Level 2, 6.6kW high power charger is an optional upgrade over the standard level 1, 3.6kW charger.

have higher charge-discharge cycle efficiencies than do batteries. These properties make them suitable to protect against power interruption in power supplies and load-levelling. Another market targeted by supercapacitor manufacturers for the near future is the transportation industry, namely HEVs, metro trains, and tramways. The high rate of energy released to decelerate these vehicles can be captured efficiently and used to assist in accelerating the vehicle on the next cycle or to supply auxiliary power. Energy storage systems such as these are currently incorporated into 16 emergency doors on the Airbus A380 jetliner which shows the readiness of this technology in terms of safety and reliability (Simon and Gogotsi, 2008). But despite these benefits, the capacities (energy density) of these systems are limited to a range of 3-5 Wh/kg according to Nazri and Pistoia (2009), i.e., about 1-2 orders of magnitude below that of a lithium ion battery. As such, this technology is restricted to compliment battery use and is currently impractical for stand-alone use in EV applications (Simon and Gogotsi, 2008). In addition, these devices self-discharge rapidly and their voltage varies greatly with the level of charge leading to complexities with powering electric motors using a motor controller (Harrop, 2013).

Figure 1 shows the relation of power versus energy densities for batteries and supercapacitors on a logarithmic scale. A supercapacitor can release the power quickly to accelerate a car, but that won’t last for long. In contrast, a battery will last much longer, but can't provide the same high burst of energy.

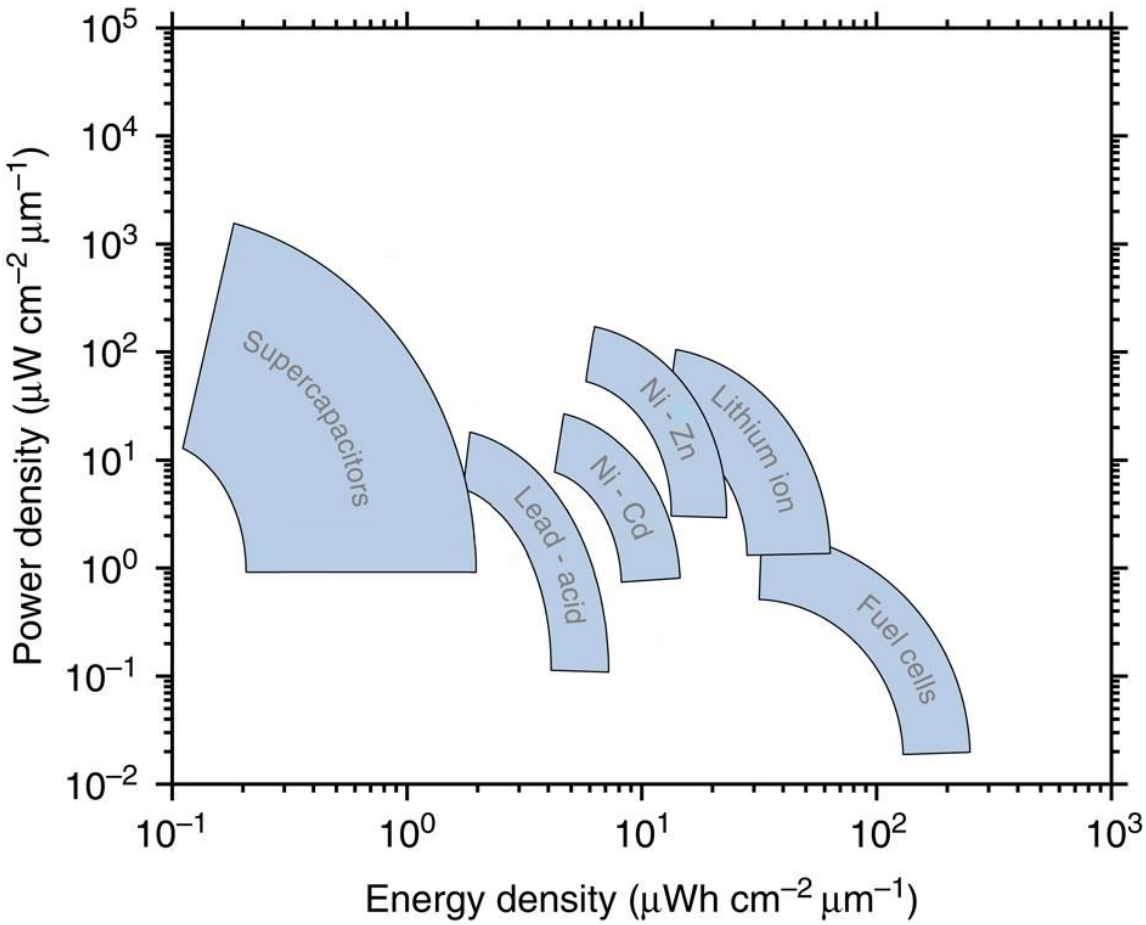

Figure 1: Power density vs. energy density for energy storage systems
(Pikul, Gang Zhang, Cho, Braun, & King, 2013)
(©2013 Nature Publishing Group, adapted by permission)

Figure 1 also reveals the challenges of using lead acid batteries to power electric vehicles or trucks given the limitations in comparative power and energy densities with other battery types.

2.2.3 Newer Technologies

On-going research and advancements in energy storage technology have opened up major opportunities for renewable energy storage and usage. Pikul et al, (2013), have demonstrated a high-power and high-energy density lithium ion battery with a power density better than the best super-capacitor and an energy density comparable to conventional lithium ion batteries. Vlad et al., (2014) presented a solution to the issue of recharge power limitations of conventional lithium ion batteries. They hybridized a supercapacitor with a Li-ion battery material ($LiFePO_4$) resulting in an energy storage system with significant improvements in charging power rate and cycle lifetime. Although it may be a few years for these or other energy storage research advancements to enter the commercial market, their impact is on the foreseeable horizon.

2.3 Fuel Prices

One of the main drivers for developing alternative fuel vehicles has been the varying costs of different types of fuel. This was evident with the rise in fuel cost during the Arab oil embargo in 1973, when "Electric Vehicle development activity was pushed to the forefront" (Rajashekara, 1994). Following the oil price drop in the 1980s, interest in electric vehicle activity once again declined. More recently, the price rise in gasoline and diesel to levels seen just before the 2008 financial crisis along with an increasing concern for the environment, have caused interest in electric and hybrid electric vehicles to once again increase. Fully-electric vehicles with acceptable range and charging capability, and

comparable performance to conventional vehicles are now commercially available. These include the Ford Focus Electric, Nissan Leaf, and Mercedes Smart Electric to name a few. At the forefront, the luxury Tesla Model S vehicle stands out with an available range exceeding 400km.

Carollo (2012), suggests that since 1999, analysts, oil companies, and producing countries do not have control of the fundamental oil market mechanisms or even an understanding of the driving dynamics behind it, as evident by the lack of a single correct forecast of the price of oil by major analysts and government "experts". The price swings during 2008-2011 are examples of the lack of control over the price of oil. Therefore, establishing the exact cash savings for owning a green car over its operational life is filled with uncertainty. However, as the petroleum prices currently stand, more and more people are shifting to green vehicles as the investment payback periods are becoming shorter.

Another area where the attention of mining companies in particular is shifting is liquefied natural gas (LNG). According to Brendan Marshall, director of economic affairs at the Mining Association of Canada (MAC), the price of natural gas at the end of 2012 was the same as it was at the beginning of 2000 at about $4 per million BTUs, whereas the price of diesel has more than doubled from US$ 16 to 34 for the same amount of energy during the same time period (FC Gas Intelligence, 2014). That is, if a mining company can switch its operation from diesel to LNG with the same usage efficiency, it will shed about 88% of its fuel costs. Economically speaking, for haulage fuel costs, that is far better than the savings any hybrid- or fully-electric system can provide. Despite the hurdles involved with this

switch (diesel to LNG) and mining company tendencies to resist change, the overwhelming cost benefits of using LNG have triggered serious considerations by several cmpanies. According to Chambers (2013), the world's two biggest mining companies, Rio Tinto and BHP Billiton, are both considering LNG-fueled trucks to cut down energy costs as they expand their fleets in Western Australia. Chambers suggests that with rising diesel costs, companies are re-evaluating mine plans and methods that include an interest in reducing costs by using conveyor belts. Shell, as well as Caterpillar, is looking at implementing LNG-powered haul trucks by 2017 (Chambers, 2013).

Regardless of the type of fuel or technology, for a mining company to accept the concept, it must be attractive financially. If an economic case can be made for hybrid-electric vehicles similar to how switching to LNG is appearing to be an economic investment, this may lead companies to demand haul truck manufacturers to develop the technology. Acknowledging that the savings of the hybrid electric system are nowhere near what LNG can provide at its current price, a sudden change in LNG's price can change this picture quite rapidly. It is also suggested that the hybrid electric system can be used with any type of fuel-burning engine: switching fuel types impacts costs because fuel prices are different. A hybrid electric system impacts costs in part by burning the same fuel more efficiently.

2.4 Evaluation of Mining Projects

There are a number of methods to evaluate the feasibility of a mining project. One of the most common methods is to calculate the NPV (Net Present Value) of a particular project

over its lifetime. The method accounts for all annual cash flows for the project after discounting using an appropriate interest rate. In some cases, inflation can be included in the analysis, but that is generally difficult to predict. In the first few years, the annual cash flows are negative as the investment in the project is made. Additional outflows may also occur at later intervals to replace worn-out equipment or to perform maintenance to return worn-equipment to the desired design productivity level. Positive cash flows ensue in the case of this analysis from annual operating and maintenance cost savings as well as a potential increase in the lifetime of equipment to move replacement costs farther into the future. The sum of the discounted incremental annual cash flows that occur from the project gives the incremental NPV for the project.

In this case, impacts on annual revenue can be ignored by assuming the annual production rates are the same for conventional haulage trucks and for hybrid-electric trucks. Should the analysis indicate a reduced cycle time that could impact positively on production rates, the number of trucks used can be adjusted to maintain production at the same level for both systems. With production constant, then annual revenues remain the same each year.

This incremental analysis can be done on an "after tax" basis. To do this, one must assume that revenues will exceed annual operating and maintenance costs and capital depreciation. In that case, applying an appropriate tax rate can be done to generate an incremental after-tax profit impact situation. In the mining industry, generally the incremental evaluation of alternative investment opportunities is done on a "before tax" basis (Meech, 2013).

There are many known deposits around the world that cannot be mined because they are not feasible financially; partly due to the high cost of energy to break rock and then to transport it. The technical methods used in mining gold-bearing rock are almost identical today as they were twenty years ago (Beyond Borders, 2014). According to Peter Kondos, Senior Director of Barrick's Strategic Technology Solutions, projects have maintained their profitability despite rising energy costs associated with older mining methods simply because of the rapid increase in the price of gold between 2000 and 2012 (Beyond Borders, 2014). As a result, production growth has been a higher priority than innovation. However, with the recent 28% drop in gold price in 2013 and the continuing increase in energy costs, mining companies are now faced with a situation that undermines the feasibility of new projects.

The Ontario Mining Association indicates that energy costs constitute 15 to 30 per cent of the total costs of a typical mine in Ontario (Migneault, 2013). It is recognized that most mines in Ontario are underground ones. Nevertheless, the rising cost of energy affects both underground and open pit operations. This has driven companies to begin looking much more deeply into ways to conserve costs and optimize their mining operations (Beyond Borders, 2014). This is not just a question of making a project more profitable, rather such work can be the difference between throwing out a project all together or continuing to mine at lower costs in the future. This can continue to keep people employed and boost the local economy for many years.

2.5 Current Mining Technologies

Mining companies and manufacturers are becoming more aware about energy consumption and alternative ways to lower energy usage such as using hybrid-fuel equipment.

Barrick's Strategic Technology Solutions (STS) group believes that mining haul trucks will be replaced by more efficient and cost effective methods to move materials such as conveyor belts and "rail-veyors" (Beyond Borders, 2014). Vale, a brazilian mining giant, is replacing haul trucks with conveyor belts at its Serra Sul iron ore mine to connect the deposits and the processing plant, part of a plan which according to Bloomberg, will halve costs associated for haulage from mine to port (Mining Technology, 2013). According to Blades, a senior manager with the STS group, haul trucks use 0.9-1.2 kWh per tonne per kilometer in comparison to a conveyor system energy use of 0.5-0.7 kWh/tonne-km. In addition, the STS group is also considering regenerative braking technology to capture energy for downhill sections of a conveyor system. According to Blades, "the up-front costs of such [innovative technologies] are more than worth it, as the investment will lower energy costs, extend mine lives and shorten lead times to complete new projects." (Beyond Borders, 2014)

Maxwell Technologies is supplying ultracapacitors[2] to CAT for installation on a new CAT 1400-ton shovel, the industry's largest hydraulic mining shovel. The ultracapacitor enables energy absorption during brief shovel arm movements (deceleration, lowering) and allows for rapid delivery of the stored energy to supplement the main power source to raise or accelerate the arm on the next cycle (Newswire, 2013). The stored energy which is normally lost as heat in conventional systems can provide considerable savings on energy use and hence costs. Supercapacitors are certainly an appropriate choice for this application given the high power delivery, low capacity, high storage cycle efficiency, and high cycle lifetime requirements.

According to Dann Gwyn, Product Manager for Underground Mining at GE Mining, given the large ventilation infrastructure required as underground mines become deeper, it is less cost effective to use diesel-burning machinery in the mine to dig and haul ore. Tobias Unosson, Product Manager for Minetrucks at Atlas Copco, reports that the energy cost to power large ventilation system constitutes up to 30% of an underground mine's total operating costs. GE is currently focusing on electric scoops which use onboard electric energy stored in batteries to address this problem. Gwyn suggests the benefits of the fully electric system include major fuel savings, drastically reduced maintenance costs from eliminating oil changes, transmission maintenance, etc., in addition to greatly reducing costs

[2] Ultracapacitor and supercapacitor terms are used interchangeably.

for ventilation infrastructure and energy. GE will reportedly add the same electric drive technology to its other underground equipment in the near future. (Jensen, 2013)

In June 2013, Atlas Copco introduced its electrically-powered underground mine trucks and load-haul-dump machines (LHDs). The electric mine trucks are powered mainly from overhead trolley rails. When there is no access to the rail, the system switches to a small onboard diesel engine. According to Jensen (2013), energy consumption with this technology is reduced up to 70% due to the much higher efficiency of an electric motor to that of a diesel engine. As well, the electric motor dynamics combined with power from the trolley lines enable electric trucks to operate much faster than their diesel counterpart. Regenerative braking is also incorporated into these systems, a feature not possible with a conventional diesel truck. According to Atlas Copco, "almost 30% of the energy consumed while the truck is driving up the ramp can be regenerated as it descends." The LHDs also feature electric motors to propel the vehicles. The power is supplied using cables and a cable reel management system, which accurately coordinates laying the cable in the path of the machine while it is moving. Obviously, battery and/or capacitor storage would be extremely useful to reduce this infrastructure cost and danger. Jensen suggests manufacturers will continue development of electric-powered mining equipment in the coming years. (Jensen, 2013)

These developments show the extent to which mining companies and manufacturers are concerned and committed to reducing energy consumption and its associated costs. There

is good evidence to suggest that energy storage will be featured in haul trucks in the form of hybrid electric vehicles in the near future to provide further benefits.

2.6 Overview of Hybrid Electric Powertrain

The power-plant of an HEV consists of a combustion engine, electric motor(s)/generator, motor controllers, and an energy storage system (battery, ultra-capacitor, etc.). The combustion engine is similar to one found in any conventional vehicle. However in certain cases with an HEV, the I.C.E. can be reduced in size due to the assist available from the electric system. The HEV control algorithm takes advantage of the highly variable and relatively-low fuel efficiency of the I.C.E. to improve fuel consumption significantly.

2.6.1 Brake Specific Fuel Consumption

The efficiency of an I.C.E. changes with operating speed and torque. Efficiency refers to the mechanical power produced at the I.C.E. output shaft divided by the rate of release of chemical energy in the corresponding fuel at steady state conditions. The torque produced by the engine is controlled by adjusting the fuel and air flow rates. Engine speed is a function of the net torque and the load governed by the laws of kinetics. Engine efficiency data are usually presented in the form of Brake Specific Fuel Consumption (BSFC) maps in which fuel consumption per unit mechanical energy produced at the I.C.E. output shaft is shown at different operating speeds and loads. These curves are produced by setting the engine in a rig coupled to a load such as an electric motor that produces torque in a direction opposite to that of the engine. The motor is placed in speed-control mode to limit the rotation of the engine

(say 1,000 RPM). In speed-control mode, the motor applies and adjusts the required resisting torque to maintain the required speed. The motor torque required to maintain 1,000 RPM and the rate of fuel burn by the engine are recorded. The resulting fuel burn is divided by mechanical power produced by the engine (speed * torque). This data provides a single point on the engine efficiency map which is at 1,000 RPM and some torque value. To generate BSFC values for higher engine torques at 1,000 RPM, the engine fuel feed rate is increased while the motor increases its negative torque to maintain the speed at 1,000 RPM. This is repeated at different speeds and torques until a full map of fuel burn over the engine speed and torque envelope is acquired. BSFC maps are plotted as contours representing iso-values of rate of fuel burn per unit mechanical power at the I.C.E. shaft. As such, these values are inversely proportional to engine efficiency.

Figure 2 is an example of a BSFC map taken from a 4-cylinder diesel engine rated at 110 kW at 2,500 RPM.

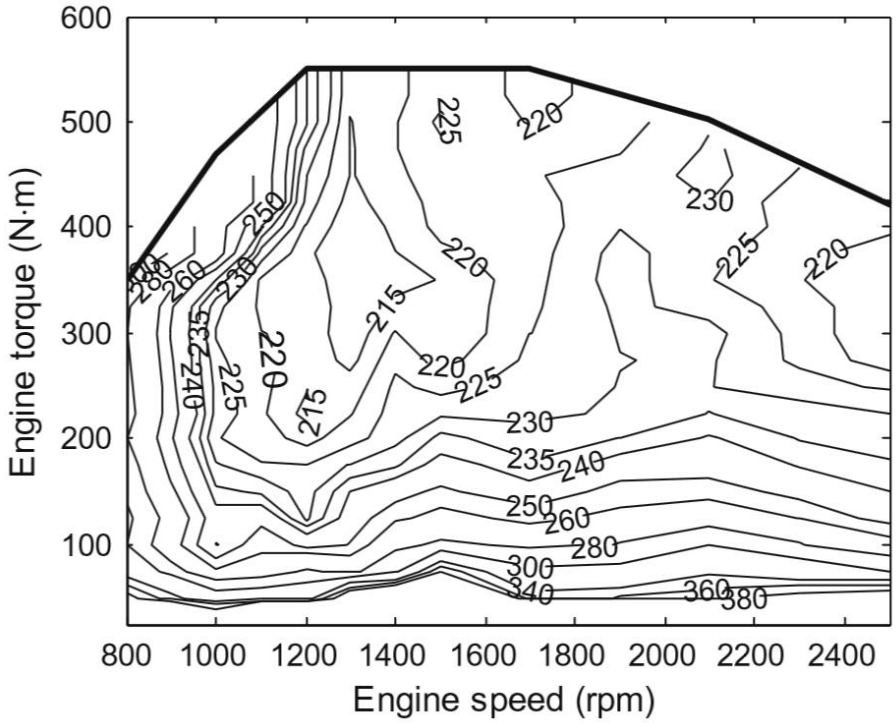

Figure 2: Brake Specific Fuel Consumption (g/kWh)
(Xiong, Zhang, & Lin, ©2009 Elsevier, adapted by permission)

The horizontal and vertical axes represent engine speed and torque respectively. For the case presented in Figure 2, the most efficient point at which the engine operates is about 1,300 RPM at a torque of 350 Nm, because that is within the contour with the lowest BSFC value. At this point, 47.6 kW of power (the product of speed and torque) is output. To maximize fuel efficiency on any given cycle, the engine should operate as close to this point for as long a period of time as possible. Problems arise with varying torque/power requests from the driver, which limit the ability of the control system to maintain the engine near its peak efficiency point.

Essentially, feedback from the driver to the engine control system occurs through the position of the accelerator pedal which is mapped by the manufacturer as a torque request (set point) translated into an engine torque request based on the current transmission gear. If the current torque request is not at the optimal point, the control system must deviate from this set point in order to deliver the power requested. Otherwise, the driver will experience either an excess or lack of power delivered depending on the operating point. In a vehicle with automatic transmission, the control system considers alternate transmission gears to move to relatively more efficient zones on the BSFC map. In these vehicles at steady state conditions, the primary factor by which the control system selects the appropriate gear is the BSFC map, barring any speed or torque limitation. Shifting up for example, allows engine speed to be reduced while the engine torque request increases to compensate for the additional torque needed at the engine to provide the same torque at the wheels due to a lower gear ratio. If the new operating point is a lower BSFC value, changing gears is an economic decision that reduces fuel consumption. To make this clear, the following example is presented. The BSFC map provided in Figure 2 is considered with the following conditions:

- Travelling at constant speed at 80 kph in 4th gear
- Engine RPM to vehicle kph ratios at different gears:
    - 3rd: 28.0:1 (2,240 RPM, 74 Nm)
    - 4th: 22.5:1 (1,800 RPM, 92 Nm)
    - 5th: 15.0:1 (1,200 RPM, 138 Nm)

The control system considers switching to another gear to improve fuel efficiency. Figure 3 presents the BCFC map with operating points in 3rd, 4th, and 5th gears while Figure 4 shows constant mechanical power contours. Note that at steady state conditions, mechanical power delivered remains the same regardless of the transmission gear, only acts to change engine torque and speed to a more efficient zone barring any limitations. Otherwise, upon shifting gears, the driver would feel the difference in power delivered (acceleration or deceleration) which is not the intention. Hence, the shift in operating point on the BSFC map can only happen along a constant power line during steady state conditions.

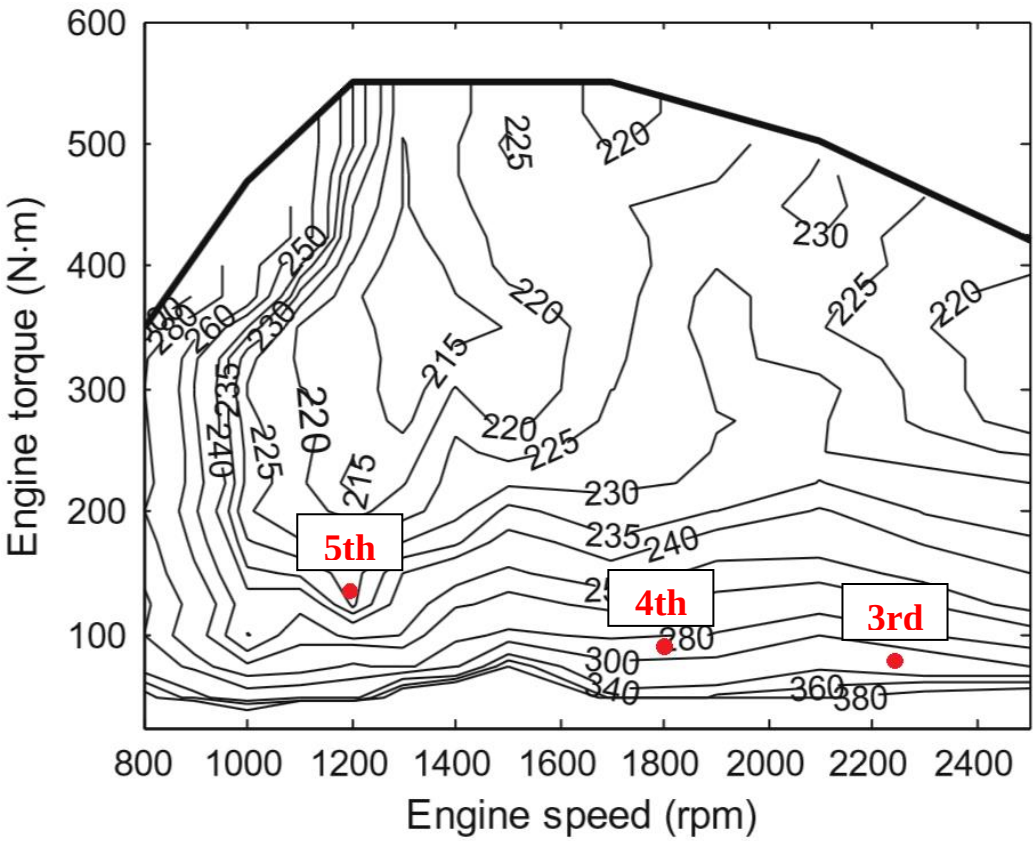

Figure 3: Transmission gear optimization with respect to BSFC map
(Xiong, Zhang, & Lin, ©2009 Elsevier, adapted by permission)

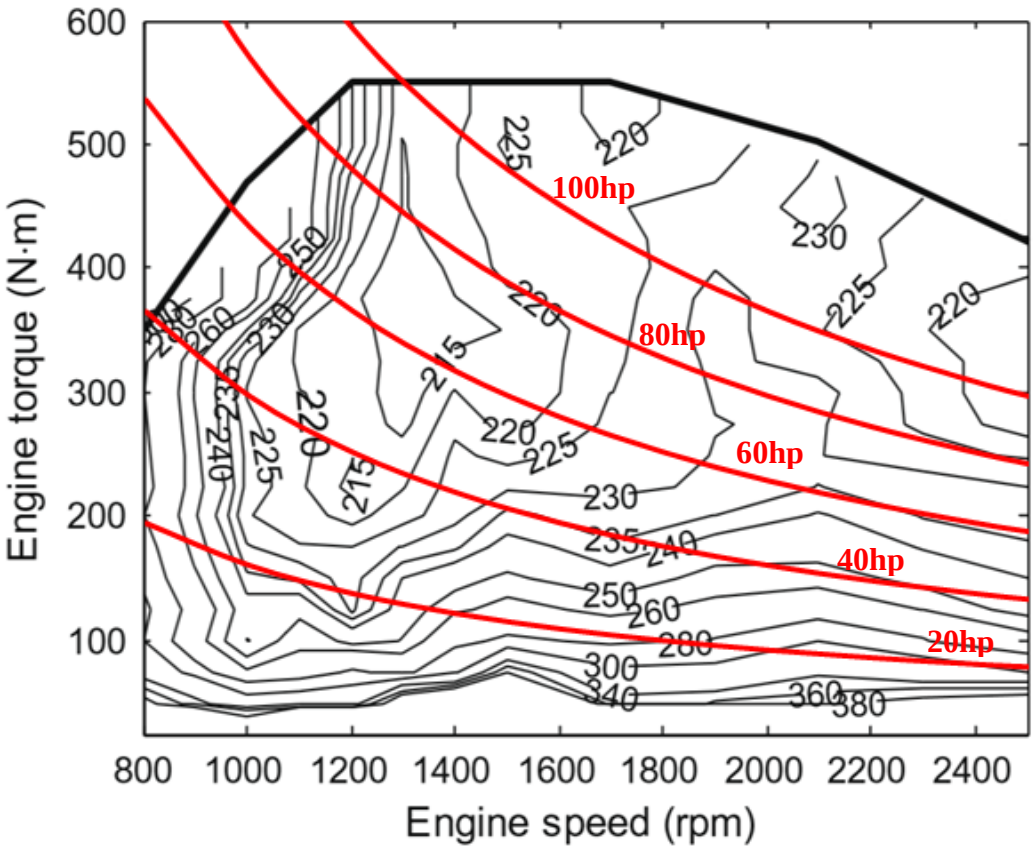

Figure 4: BSFC map with constant power lines (red)
(Xiong, Zhang, & Lin, ©2009 Elsevier, adapted by permission)

According to Figure 3, that the most efficient gear for this operation is 5th gear since its operating point lies along a contour with a BSFC value lower than those of the other two operating points. A different gear ratio from that of the 5th gear may have provided an even better efficiency along the same power line; however, the flexibility to choose the optimum point is limited by the available gear ratios. Typical manual or automatic transmission gearboxes have four, five or six cogs which provide specific and finite available gear ratios. In contrast, a typical Continuously Variable Transmission (CVT) uses a belt a pulley system where the pulley is made from two cones with their tips facing one and the distance between

them can be varied. A strong steel belt rides in between the two cones. As the cones are moved closer together, the belt is forced outwards against the surface of the cones and the diameter around which the belt spins becomes larger effectively providing a different transmission ratio from the rotation of the pulley to the movement of the belt. CVT, as its name suggests, allows for a continuous range of gear ratios to select the optimum operating point along a constant power line. However, even with a CVT, there is no ability to move across different power lines at steady state since the change in power results in the power difference being applied and felt by the driver. In other words, additional energy in a more efficient zone cannot be found while a higher than required power setting cannot store its excess energy for later use. This desired flexibility is not only possible in a hybrid electric vehicle, it is a key feature that provides significant advantages as will be explained.

It should be noted that, in general, the I.C.E. has relatively low efficiency at low engine speeds and/or low to medium torques, a condition which occurs during idling with the transmission selector in drive mode. Although each engine has different BSFC data, this condition generally applies to gasoline-fired I.C.E.s because frictional forces are relatively constant in the cylinder walls such that at low loads, only a small fraction is delivered to the engine shaft as useful mechanical energy compared to the total mechanical energy produced by the engine, i.e., low fuel efficiency. In other words, if the engine produces a higher amount of torque, a smaller fraction of the total power is wasted by friction, making the engine more fuel efficient. This trend can be seen in Figure 2, where BSFC values generally decrease with increasing torque.

A hybrid electric power-train essentially works by providing added flexibility in operating the engine close to the point of maximum efficiency to minimize energy losses. The aim is to run the engine close to the optimum point with the storage system acting as a buffer to compensate for variations in driver torque requests. The control system attempts to operate the engine at its peak efficiency point (speed and load), resulting in a specific power being delivered by the engine. If the driver power request is lower than this optimum point, the surplus energy is absorbed through an electric motor in regeneration mode and stored in the battery such that the remaining power delivered to the wheels is precisely the power requested by the driver. Similarly, if the delivered engine power at the optimal operating point is below the driver's power request, the electric motor assists the engine by using energy stored in the battery. The result is a higher overall trip efficiency as the engine operates close to its optimum operating point for as much of the time as possible. This is constrained by restrictions such as motor power limits, motor controllers, and the limits of the energy storage system. Figure 5 makes this concept clear. Consider a hybrid electric vehicle currently operating at point A (1,150 RPM, 150 Nm, and 18 kW). Point A lies on a contour representing 230 grams of fuel per kWh of energy on the map. If the engine operation moves to point B (1,300 RPM, 250 Nm, and 34 kW) at 220 g/kWh, a more efficient combustion results. However, at point B, the engine delivers at an extra 15.9 kW of power which is not needed at the wheels for travel but which can be used by electric motor acting as a generator to store this energy in the battery. Similarly, moving from point C to point D increases the I.C.E. efficiency, but such a move results in engine power below what is needed. This is compensated by the electric motor using energy stored in the battery. It

should be noted that high flexibility is required to operate the engine at the desired speed regardless of the vehicle speed in order to be free to operate at any point on the BSFC map. This explains why a CVT is highly desirable in an HEV (Toyota Camry Hybrid, Toyota Prius, Nissan Altima Hybrid, Ford Escape Hybrid).

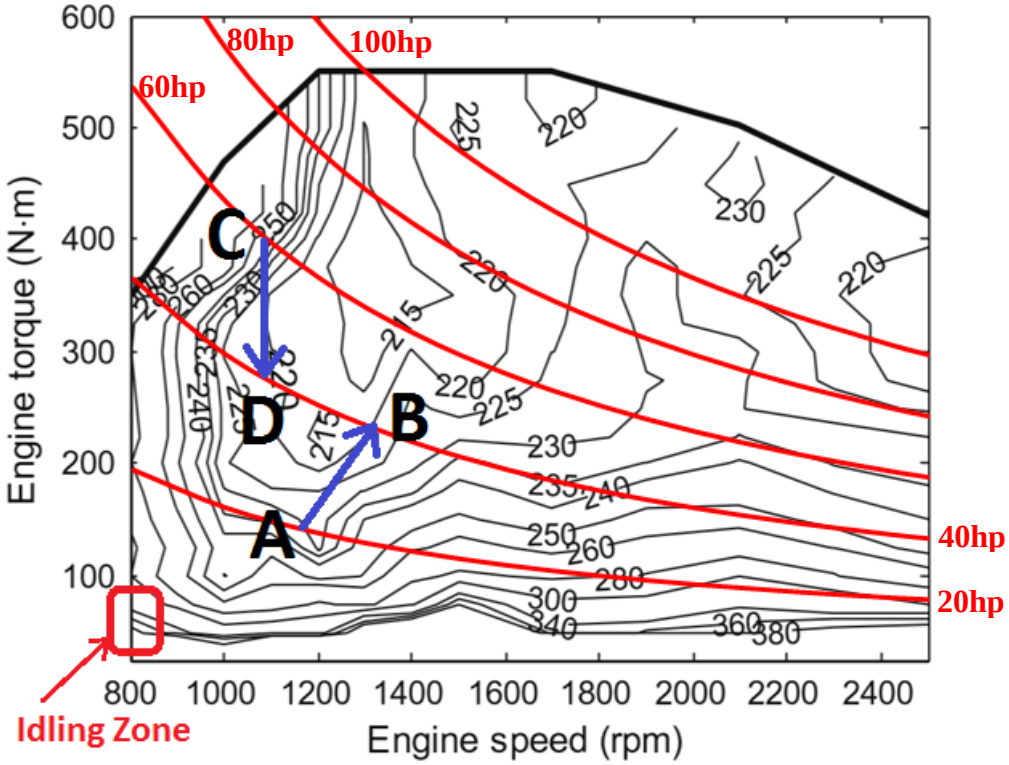

Figure 5: Shifting of operating points on BSFC map in HEVs
(Xiong, Zhang, & Lin, ©2009 Elsevier, adapted by permission)

In addition, the hybrid power-train allows for engine-off operation at low speeds and stops, so the highly-inefficient idle zone is avoided (see Figure 5). Regenerative braking is also incorporated to store some of the vehicle's kinetic energy into the battery during braking.

2.6.2 An Overview of HEV Configurations

The components of a Hybrid Electric power-train can be configured in one of three topologies: Series, Parallel, and Series-Parallel. A recently-added type is the Plug-in HEV (PHEV), which can be implemented with any of the other three hybrid configurations.

2.6.2.1 Series Hybrid Electric Powertrain

Figure 6 shows a generic schematic of a Series HEV power-plant.

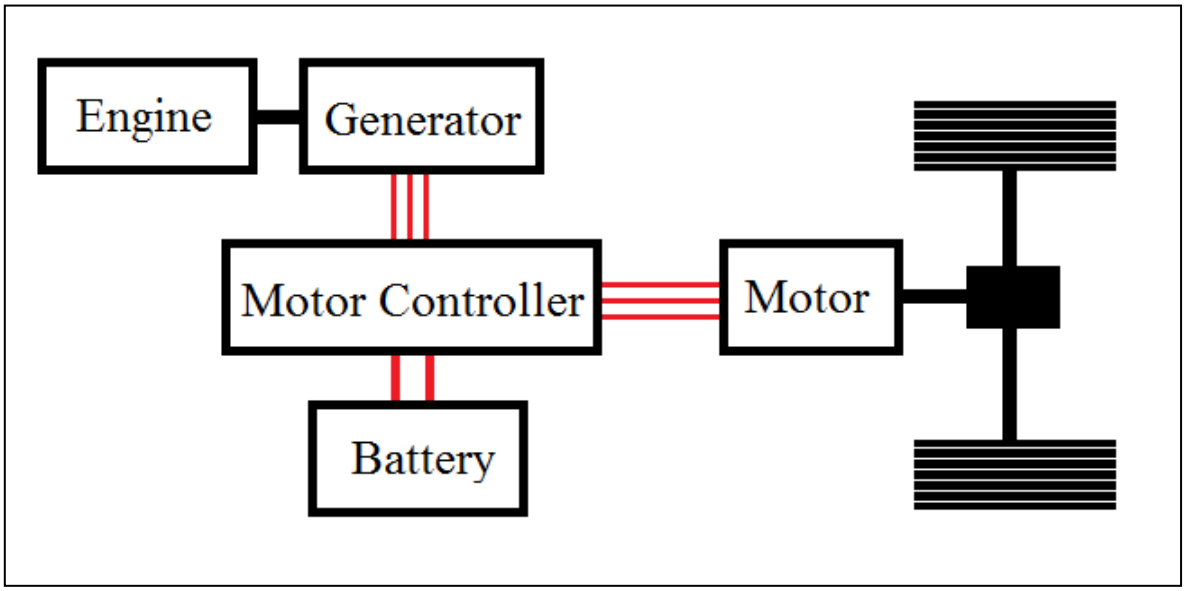

Figure 6: Series hybrid power-train

In a Series system, the engine is completely decoupled from the wheels and attached to a generator instead. The generator provides electricity which in turn powers the traction motor coupled to the wheels usually through a constant gear reduction unit. Since the I.C.E. is not connected to the wheels, it can operate in a narrower region of the BFSC map at near-peak efficiency. This eliminates the need for a complex clutch and multi-speed transmission,

increasing fuel economy, and decreasing emissions compared to a conventional vehicle (Ganji and Kouzani, 2010). Based on the electric power required by the traction motor (controlled by the driver's accelerator pedal position), the engine delivers the required power at the most efficient point possible after accounting for energy conversion losses. Minor variations in driver torque requests are compensated for by the energy storage system acting as a buffer. A slightly-higher driver torque request would use energy stored in the battery to supply the motor with the additional energy, while a slightly-lower driver torque request would compensate by delivering the surplus electrical energy generated by the motor into the battery. If there is a major change in torque request, engine operation can shift to a new relatively-optimum point that can meet the required electrical demand. As well, at low speeds and when idling, the engine shuts off with the battery powering the drive motor(s) and accessories thus saving additional fuel. One disadvantage of this system is the need for a large high-power motor and gen-set able to drive the vehicle at all speeds. Another disadvantage occurs under highway operation because conversion losses of mechanical energy to electrical energy and back again are always present although the engine operates at near peak efficiency.

2.6.2.2 Parallel Hybrid Electric Powertrain

Figure 7 shows a schematic of a Parallel HEV. In a Parallel system, the engine is coupled to the traction motor and wheels through a clutch, such that both the engine and the traction motor can transfer mechanical power to the wheels.

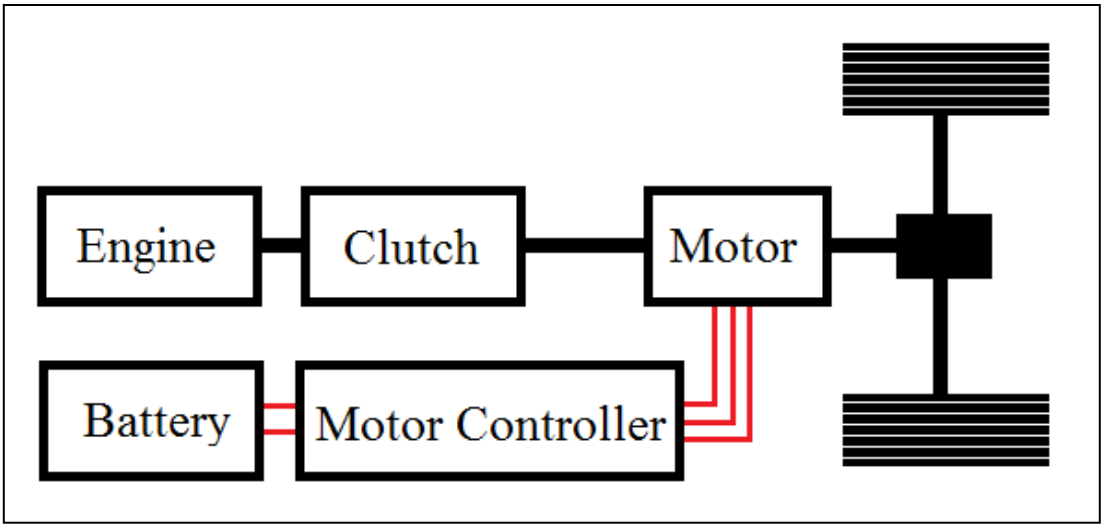

Figure 7: Parallel hybrid power-train

There are different ways to configure the transmission. As opposed to a Series HEV, the engine doesn't have full flexibility to operate independent of the wheels. The traction motor is smaller compared to the Series system, since it is only intended to propel the vehicle at low speeds and assist the engine with minor torque request variations. The engine turns on during acceleration and to operate similarly to a conventional vehicle. During periods of idling or at low speeds, the engine shuts off and the clutch is disengaged so the battery is the only energy source for the motor. Similar to a Series HEV, energy can be saved during regenerative braking. The significant operating advantage of the Parallel topology over the Series topology is that less energy is wasted during the energy conversion stages (Ganji and Kouzani, 2010). Furthermore, since a generator is not required and the traction motor size is significantly reduced, capital costs and weight are lower. During city driving, efficiency is less than the Series type since the engine has less flexibility in operating optimally especially during 'stop-and-go' conditions (Ganji and Kouzani, 2010).

2.6.2.3 Series-Parallel Hybrid Electric Powertrain

The Series-Parallel system combines the advantages and complexities of the Series and Parallel HEVs. It has the potential for better fuel economy than either of the other systems, however due to its added complexity and components, it is more costly. Figure 8 shows a typical Series-Parallel HEV power-plant topology.

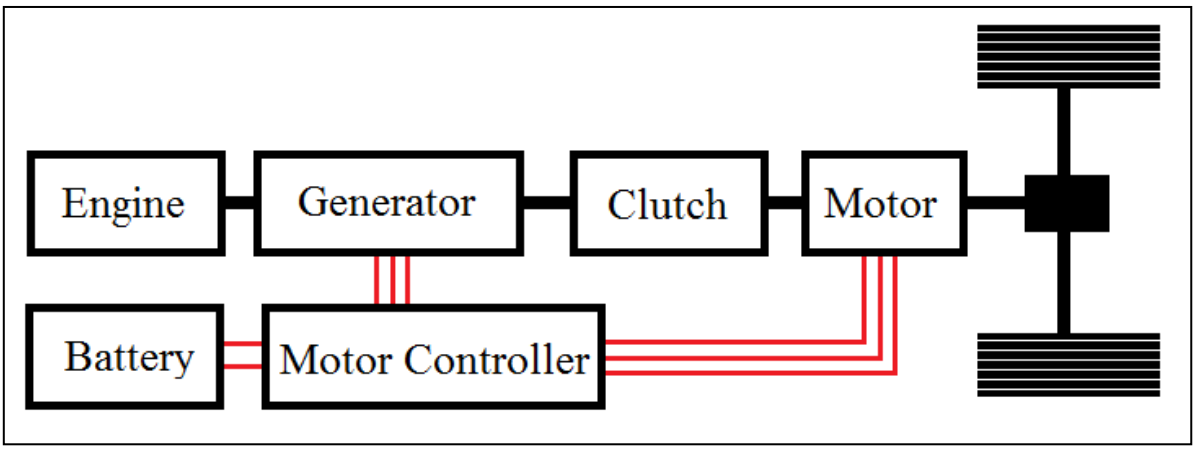

Figure 8: Series-Parallel hybrid power-train

2.6.2.4 Plug-in Hybrid Electric Powertrain

The plug-in hybrid electric vehicle (PHEV) is a recent addition to the HEV family. This power-train has the topology of any one of the three systems identified above with the difference being the system operation. PHEVs are designed to provide pure electric operation for a certain range with an engine and generator onboard to supply backup electrical power when the battery is depleted. At that point, the vehicle operates similarly to a regular hybrid. Hence, PHEV efficiency approaches that of a regular hybrid with continuous operation, i.e., the pure electric operation is a smaller fraction of daily operation. These systems are not

generally meant for continuous operation because of the time required to charge the battery, but charging time will decrease in the future with new technologies. The battery is charged using a charging station when the vehicle is parked. Regenerative braking is also incorporated into PHEVs. The energy storage system in a PHEV is much larger due to the nature of the system operating in all-electric mode for extended periods of time.

2.7 Scalability of Improvement in HEV Fuel Economy

In 2008, GE teamed with Komatsu and the U.S. Department of Energy to demonstrate the world's first hybrid-electric drive system in a mining haulage truck. According to Ng (2009), GE Transportation claimed a fuel economy improvement of up to 10% with an increased power boost and productivity increase of 20%. However, little data is available regarding fuel consumption of these ultra-large haulage vehicles under different driving conditions. As well, little information is available on hybrid-electric buses to allow one to scale-up what is known about the benefits of these systems in conventional passenger vehicles.

Table 2 displays the reported US Environmental Protection Agency (EPA) fuel economy of some vehicles compared to their hybrid electric counterparts.

Table 2: EPA fuel economy levels for some recent vehicles
(US Environmental Protection Agency, 2014)

Vehicle	Model Year	non-HEV (MPG)	HEV (MPG)	GVWR (kg)	Fuel Savings
Honda Civic	2014	33	45	1665	27%
Toyota Camry	2014	28	41	1939	32%
Highlander FWD	2014	20	28	2490	29%
Ford E450 Delivery Vans[3]	2009	N/A	N/A	6350	40%

The data suggest significant fuel economy improvement regardless of vehicle weight which suggests that hybrid technology is scalable. Of course, the components increase in size with an accompanying increase in vehicle weight. It should be noted that these data are from tests where the vehicles were driven on a dynamometer according to a specific drive cycle such as the "EPA Urban Dynamometer Driving Schedule (UDDS) city-cycle". These cycles involve speed-versus-time schedules to represent a typical city-drive cycle. A driver tries to closely match the scheduled speed profile displayed on a monitor (Figure 9).

Figure 9: Measurement of vehicle fuel economy on a standardized EPA schedule
(Taken from http://www.fueleconomy.gov, used by permission)

[3] Data is based on a press release by Azure Dynamics (CNW Group, 2009).

The energy management strategy used may or may not perform at the intended fuel economy performance during this test. In fact, real life fuel economy can be quite different from the numbers reported from EPA testing. There is evidence of the effects of driving conditions on fuel economy performance of a hybrid vehicle. To demonstrate this, the following example is presented. Top Gear, a popular British television show about motor vehicles, conducted a test comparing the fuel economy of a Toyota Prius XW20 (HEV with a 1.5L 4 cylinder engine) and a BMW M3 E90 (conventional 4L V8 engine). The test was conducted on a race track with 10 continuous laps where the Prius was driven at its maximum performance limits and the M3 kept up behind. The results were 17.2 and 19.4 mpg for the Prius and M3 respectively (M3 vs. Prius, 2009). The fuel economies for the EPA tests on these vehicles are 45 mpg and 20 mpg respectively. While the M3 numbers from the test and from the EPA are comparable, the fuel economy of the Prius on the track was 260% worse than that reported by EPA and actually poorer than the M3 on the track. This is an example of an exaggerated and highly-unlikely driving scenario that shows how driving conditions significantly affect fuel economy.

Under most driving conditions, HEVs will certainly have better fuel economy than their conventional counterpart, but a marginally better fuel performance does not justify the higher capital costs associated with these more environmentally-friendly machines. In Oct 2012, four years after OC Transpo, the urban transit service for the city of Ottawa, bought 170 hybrid electric transit buses, a plan was developed to return them back to conventional diesel operation. According to Diane Deans, Chair of the Transit Commission, "they have

been underperforming. [The company] thought [it would] get a lot more fuel efficiency out of these hybrid propulsion systems than [they] have gotten." (CBC News, 2012)

2.8 HEV Energy Management

There are severe complications in designing a control system to optimize fuel economy over any given driving cycle for an HEV. Control depends on a number of variables that include battery state of charge, vehicle speed, driver torque request, driving style, engine temperature, etc. Multiple attempts have been made to develop a suitable control system that includes: a rule-based fuzzy logic system, Deterministic Engine Optimal Operating Line (OOL), Line Quadratic Regulator (LQR), neural networks, genetic algorithms, and optimal control (Ganji and Kouzani, 2010). Depending on driving conditions, road topography, section distances, and other factors, one control method may be more economic than others on any particular cycle.

As mentioned previously, an important objective of these systems is to use fossil fuel only when the I.C.E. is operating at its peak efficiency. Since all the energy originally comes from the fuel, it would be impossible to achieve HEV cycle fuel efficiency higher than the peak efficiency of the I.C.E. assuming the same level of battery charge and geographical elevation at the beginning and the end of the cycle. The goal is to stay as close to the peak efficiency point as possible and capture as much energy as possible through regenerative braking. This is the main challenge in designing an HEV control system. In a conventional HEV, all the decisions of the control system are based on current and past data (speed, state

of charge, transmission gear, driver torque request) to maximize the efficiency over the entire cycle. These strategies can be based on direct measurements or the use of statistics. A major limitation is the lack of knowledge about future conditions and driver decisions. In other words, a decision made now about the best course of action by the HEV system may end up being suboptimal because of certain future actions by the driver or future road and traffic conditions. This is evident in the fuel economy test of the Toyota Prius on a race track.

Another example of this problem is the shifting tendency of an HEV to use the I.C.E. to charge the batteries as the state-of-charge approaches its minimum level. This action is suboptimal if a long downhill stretch of road exists up-ahead where the battery can be charged using regenerative braking while travelling downhill. Of course, this wouldn't be a problem if the battery had infinite capacity and the I.C.E. was running efficiently to charge the battery since the energy would eventually be used at a later time. But due to the capacity limit of the energy storage system, any downhill travel on a full battery is a lost opportunity to capture potential energy. As such, real-time knowledge of future conditions can serve to improve the current decisions of the control system. As Ganji and Kouzani, 2010 concluded "[investigations] on road or driving cycle information and applying [the results] in a control strategy has a considerable impact on fuel consumption and decreasing emissions".

In the case of haulage trucks in an open pit mine, not only is the road geometry known, but truck speeds in each segment of travel are known to reasonable accuracy.

3. HYBRID ELECTRIC HAUL TRUCKS IN MINING

The purpose of this thesis is to identify if it makes financial sense to implement hybrid electric power-train technology in mine haul trucks given the associated risks. This section discusses potential benefits of such systems.

3.1 Known Cycle Profile

Given the complete drive cycle profile, a hybrid control system can be designed to manage energy between the I.C.E. and the electric motor to maximize fuel efficiency over the entire cycle. The cycle profile doesn't merely provide an opportunity to improve fuel efficiency incrementally, but it also gives the information needed to execute a control algorithm delivering the highest possible cycle fuel efficiency. This is not possible without knowing the full cycle data. In fact, car manufacturers could take advantage of this knowledge by adjusting their control algorithm to achieve and report the best fuel economy on the EPA test drive cycle since the entire cycle is known, but this is considered illegal for obvious reasons. As such, the control algorithms developed by car manufacturers do not necessarily achieve the potential peak fuel economy on the EPA test cycles, although they are comparable since the EPA test is intended to represent real conditions. To adjust the control strategy to get the peak fuel economy performance on a specific cycle with a known schedule requires process-power intensive simulations to find the solution that maximizes efficiency for the given cycle profile. Given the required speed, acceleration, and external forces (hills, drag, rolling resistance, etc.), the required power output from the power-train

system is known at each instance. The purpose is to identify the power split between engine and the electric motor at each instance to provide the absolute highest fuel efficiency over the entire cycle. Given today's hardware capability, this is not a problem for simulations done on-board a haulage truck. It should be noted that, even with peak cycle efficiency, the improvement in efficiency is bottle-necked by the physical limits of the components of the power-plant. For example, the battery has a limited capacity beyond which regenerative braking can't store any further energy. As well, if the optimal decision is to use the battery alone as the energy source for a specific road segment, this decision can only stand if the battery power draw limit is sufficient for the segment. Otherwise the system is forced to turn on the engine to provide additional energy. Hence, hardware limits are key issues in a hybrid electric power-train propelling a mine haulage truck. Such limits may be site (or cycle) specific situations.

First, all components must be scaled to handle the mass of a haulage truck. This includes the motor/gen-set, the converters, and the battery to name just a few of the main items. But scaling is not enough; a typical haul cycle profile is quite different from that of a car driving in the city. The battery capacity of a city-driven HEV is sized and selected to be able to supply electrical power at a stop (e.g., a traffic light) for a few minutes to the power steering, brakes, air conditioning, 12V battery, as well as providing manoeuvring power at low speeds while the engine is off. It also supplements engine power to compensate for variations in driver torque requests. Driving down an extended downhill stretch will fully charge the battery. The remaining potential energy past that point is then wasted as heat

generated during mechanical or engine braking. To store all the potential energy that can be captured, the battery must have a suitable capacity. To put this in perspective, for a 400-tonne empty truck travelling down an elevation change of 200 m, the capacity requirement would be around:

$$Potential\ Energy = mgh = 400{,}000 * 9.8 * 200 = 784\ MJ = 218\ kWh,$$

where m is mass, g is the gravitational acceleration, and h is the elevation change.

This capacity is about 9 times that of a battery in the fully-electric Nissan Leaf. Capacity is one attribute, but what about power limits? Looking at the same scenario, with the truck travelling down a 9% grade (5° slope) at 18km/h (5m/s), the rate of release of potential energy which the battery must absorb is:

$$Power = F.v = mgsin(tan^{-1}(0.09)) * 5 = 1.76\ MW,$$

where F is the component of gravitational force along the slope, and v is the velocity. This power is approximately eight times larger than the rated power of the battery packs used in the Tesla vehicle. One must also consider the cooling requirements for the battery packs during high power charge and discharge cycles. Once hardware issues are resolved, an optimal control outline can be identified for the given haul cycle, truck, and its hardware, and it can be used as long as the conditions remain unchanged. An open-pit mine gets progressively deeper over the life of the mine and so, the strategy will need updating each time the routes and distances change.

Each mine will have different road conditions, pit slopes, speeds, climate conditions; so how can a unique control system be designed for each drive cycle? Given today's advancements in computer hardware technology, it is suggested that upon delivery of each truck, it can be driven through the drive cycle in a calibration mode in which the on-board computer will gather data about road geometry, conditions, speeds, etc. using sensors. Then the optimization simulation can be used once the test run is complete. The simulation output will be a complete schedule of the energy management strategy over the entire drive cycle to maximize fuel efficiency. Once done, the strategy can be used at the mine as long as conditions remain unchanged. Upon change of parameters such as increase in pit depth, creation of alternate roads, etc., the calibration can be run again with a new energy management strategy over-riding the old one. This method is impractical for city-driving since conditions are constantly changing (speeds, traffic, road geometry, load, etc.). The much greater consistency of these variables for haulage in a mine can be put to great advantage to maximize fuel economy of the HEV system over the drive cycle.

Obviously, other complexities must be taken into account. However, if HEV technology is offered for mine haulage trucks, the factors discussed above can be considered and a full cost analysis done to understand the economic impact of such a system to determine if fuel savings over the operational life of the truck will pay for the added capital costs.

3.2 Change in Elevation

Sloped road segments generally hurt fuel economy of regular vehicles since mechanical and/or engine-braking are applied in the downhill segments to maintain safe speeds. This translates to a loss in energy efficiency. In other words, the majority of the energy spent to go up-hill is wasted as heat. With city driving, waste heat output by the brakes after each stop and go situation to restore velocity explains the difference with highway driving where the only energy required from the engine is to resist steady state friction and drag forces. Generally, minimizing the application of mechanical and/or engine brakes translates to fuel economy improvements. City driving and hilly-roads are cases where the hybrid electric power-train provides a more pronounced difference in fuel consumption over the baseline vehicle. This is made possible by regenerative braking where some of the energy is absorbed using the traction motor in regeneration mode to slow the vehicle. This stored energy is later used standalone or to assist the engine thus reducing fuel consumption. This also explains why hybrids generally have better fuel economy in the city than in highway driving where some of the normally-lost energy can be recovered. It should be noted however, that an HEV's mechanical braking system are usually used when the driver applies the brake pedal. As the mechanical brakes are applied, the traction motor is also ramped-up to its maximum negative torque to capture energy. The maximum torque and power envelope of the AC induction motor in an HEV are nowhere near the ability of the mechanical brakes to stop the vehicle. This is especially true at high speeds since the motor power envelope limits torque available at high motor speeds. (see Figure 10).

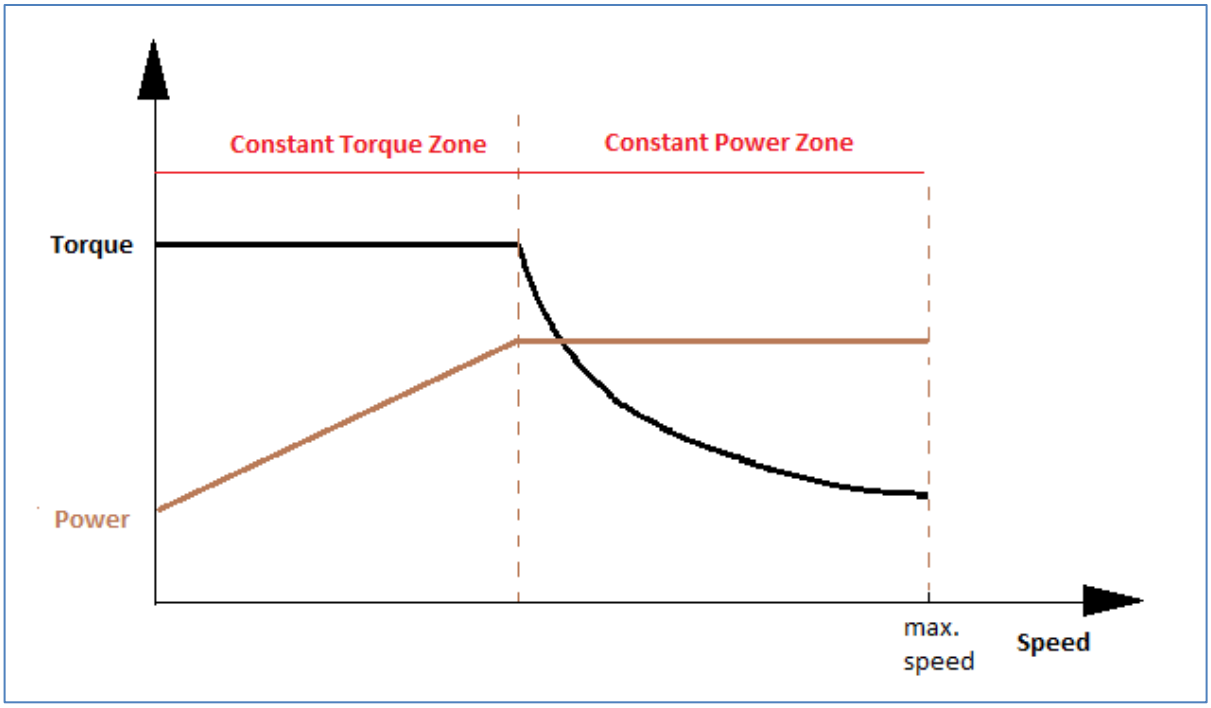

Figure 10: Typical torque and power envelope of an AC induction motor

Ideally, the traction motor should be sized to eliminate the need to apply mechanical brakes at all with these brakes serving as a redundant system in the unlikely event of a motor/electrical failure.

Consider a scenario where the driver of a hybrid vehicle sees a stop sign 500 m ahead. One alternative is for the driver to just touch the brake pedal to activate the brake switch for regenerative braking to kick in (minimal mechanical braking) and absorb most of the available inertial energy over the long distance available for stopping. The other alternative is for the driver to coast for 450 m and then slam on the brake pedal for the final 50 m in which case the majority of the energy is lost as heat. While some regenerative braking occurs at the end of this segment, the time in which the motor at its peak torque is

able to absorb energy is very limited. It should be noted that the two braking alternatives (conservative vs. aggressive) make no difference in the fuel consumption of a conventional vehicle since all the energy is eventually lost as waste heat in all cases. As such, it must be recognized that driver behaviour will have a greater impact on fuel economy with a hybrid vehicle than with a conventional one. As well, if the HEV driver operates the vehicle conservatively in a downhill segment, most of the potential energy will be lost since the effective component of gravity that pulls the vehicle down the sloping road may be much higher than the maximum braking force that the traction motor can supply to the wheels. Even if this restriction wasn't the bottleneck, the overall power absorption is heavily limited by the charging power limit of the battery. So, although some energy is captured, mechanical/engine braking must also usually be applied to control the speed. Furthermore, once downhill regenerative braking has charged the battery to its maximum intended charge level, no further energy can be captured. Both occurrences are lost opportunities for better fuel economy. Hybrid control systems and components are not generally intended and sized to provide maximum fuel efficiency exclusively for hilly roads. In other words, they are not designed to capture all the potential energy due to elevation change. One may ask: why not choose a large-enough motor to match the ability of mechanical brakes so all the energy can be captured? Doing this may be impractical due to motor cost, size, and weight limitations. As well, with an increased motor capacity, the motor controllers and the energy storage system must also be upgraded due to power limits of individual units in the system. Given the losses that exist in hilly conditions even with a hybrid, would it make sense to eliminate these losses for a vehicle that is to be driven on inclined roads regularly? In other words,

would the benefits justify the additional cost and weight? The answer to this question really depends on the exact profile of the drive cycle and many other parameters. But let us consider a haul truck in an open pit mine travelling the same drive cycle many times a day.

The haul cycle of all major open pits contain inclined haul roads.

The change in elevation along with the cycle profile and speeds are known with reasonable accuracy, especially for an autonomous haulage truck fleet. In this case, the option to install a hybrid system on these trucks can be explored wherein the batteries, motors, and all other related components are designed to capture energy as the truck travels down into the pit in a way that minimizes/eliminates mechanical/service braking.

As previously mentioned, the energy storage system must have sufficient capacity to absorb as much potential energy as possible during regenerative braking. This energy can then be used at the bottom of the pit to provide engine-off power for driving during loading, to assist the engine in the subsequent uphill segment and provide engine-off operation during the dump cycle. The traction motor(s) needs to have a power limit sufficient to provide complete electrical retarding. The battery also needs to have sufficient charge and discharge power limits. Mechanical brakes are still present for safety, but ideally, they are not used which will reduce losses and maximize the life of the service brakes. Once the components are sized and selected appropriately, control software can become the focus.

3.3 Existence of Hybrid Electric Components

Toyota's development of their first hybrid electric vehicle faced an enormous level of risk. All the system components had to be integrated and tested in a variety of conditions in a market that had no existing hybrid electric drive vehicles.

In comparison to currently available electric drive haul trucks, the technical risks associated with implementing a hybrid-electric system are greatly reduced compared to Toyota. With current electric-drive trucks, most of the required hybrid components are present in a configuration similar to a Series hybrid. The motor/gen-set and motor drivers have all been sized appropriately for operations in open pit mines and undergone extensive testing, which is a pre-requisite for these systems to be commercially available. The only major component addition required is the energy storage system (battery). Some auxiliary electric systems will also be required to provide engine-off power steering, brakes, etc. Not only does this reduce development risk, it reduces the major component cost to that of the battery alone. It is suggested that the capital cost of a mechanical and an electric truck with the same tonnage capacity are comparable (Meech, 2013) and the options that are offered will provide greater flexibility to support the needs of specific mine conditions. For example, electric drive trucks are generally preferred for steeper roads since, according to Lovejoy (2013), they have superior performance, higher top speeds, and better retarding capability over their mechanical counterparts. This suggests added capital costs are only from energy storage, related auxiliary systems, and component integration.

3.4 Autonomous Haul Trucks

With a conventional power-train, driver behaviour plays a key role in fuel economy. Parreira (2013), concluded that autonomous haulage has a fuel economy improvement of about 6% versus manually-operated trucks. Part of these savings is due to a better managed system where truck idling times and travelled distances are reduced. In this work, fuel savings due to driver behaviour is of interest because driver behaviour has a more significant impact on fuel economy in an HEV than the conventional vehicle. For the case of a computer-controlled autonomous haulage system, the same ideas apply with the added benefit that the computer has precisely-executed behaviours that can be implemented to yield peak fuel economy based on cycle profile and other known parameters. There are mines already running driverless trucks. Rio Tinto is running three mines in the Pilbara region in Australia deploying a total of 39 autonomous haul trucks and BHP-Billiton, Fortescue, and other companies are following suit (Hall, 2013). Integration of hybrid trucks into an existing fleet can be done in steps. However, to introduce an autonomous fleet into existing manual operation is difficult as integration across the two systems can pose many risks and challenges. The idea of hybrid-electric autonomous haulage trucks is likely a few years away at best, given the risk-adverse nature of many mining companies.

3.5 Comparison of Hybrid Electric to Trolley Assist

Trolley-assisted haul trucks are commercially available for purchase and have been on the market since the 1980s when the energy crisis led to their development for the mining

sector (Mazumdar, 2011). They have all the systems present in a regular AC-drive haul truck plus the setup to obtain additional electrical power using overhead cables. An image of a trolley-assist system is shown in Figure 11.

Figure 11: Haul truck equipped for a trolley-assist system (Koellner, 2008)

A trolley-assist truck can be a hybrid-electric vehicle wherein the energy storage unit is a central grid and electrical power is transmitted along the trolley lines. According to Mazumdar, (2011), current trolley systems in mining are deployed for uphill travel only and regenerated braking energy is wasted through grid resistors during the downhill haul. Even

with storage of energy resulting with regenerative braking, the system presents missed opportunities for fuel savings that a hybrid-electric system can provide. Unlike a hybrid, the system is incapable of engine-off operation during loading, dumping, and positioning since the trolley cables do not extend to the shovel or dump points. This would entail regular repositioning of equipment. So, with no alternate energy source, the truck will run on engine power during these operations. Nevertheless, these systems do have some key advantages over conventional trucks. First, where electricity can be cheaply-sourced, it can be used directly to power the drive motors thus reducing fuel costs significantly. Second, on very steep grades, the electrical power from the grid can be used in addition to power supplied by the engine to run the drive motors giving higher rimpull on upgrade segments for higher speeds and productivity. This can translate into a reduced number of trucks due to better fleet utilization. Third, the external power source allows for reduced engine load extending service life and reducing associated maintenance costs. All these benefits however, come at a cost - the major infrastructure cost to purchase, setup, and maintain the trolley system.

It is clear that a slow transition of a fleet of trucks to a trolley-assist system is impractical as the costly infrastructure must be setup regardless of the number of trucks in the fleet. In comparing trolley-assist with an on-board energy storage battery, the major advantage is the ability to source electricity directly from the grid. This raises the possibility of a hybrid-electric truck equipped with a system able to sourcing electricity from the grid (the source of all the energy in a regular hybrid is the engine). With today's improvement in battery technology and the emergence of plug-in electric vehicles with fast charging

capability, it might become practical to charge the truck battery as it waits at a loading or dumping bay. Even though such a system would not be equipped with trolley-assist, it is an onboard assist system providing the benefits and flexibilities of both hybrid-electric and trolley-assist systems. Such a plug-in system and the opportunities this could bring are beyond the scope of this research.

It should be noted that transition of a fleet of conventional trucks into a hybrid-electric fleet can be done slowly to mitigate risks since the only infrastructure required is shop equipment for the maintenance of hybrid-electric related components on trucks as they are up-graded, one at a time.

4. FINANCIAL INVESTMENT PAY OFF

4.1 Fuel Savings: Case Study

In this section, an analysis of fuel savings realized with the hybrid system is performed. The basis for this analysis is a CAT 795F AC truck compared to the same truck equipped with a battery-pack running in full hybrid-electric mode. The 795F AC was chosen since it is currently the only AC-drive electric truck that CAT offers (development of the first CAT electric diesel truck, CAT 793F AC, was discontinued).

Kecojevic and Komljenovic (2010), have presented graphs representing fuel consumption for various CAT truck engines based on load factors (the percentage of full rated engine power). Unfortunately, the graphs did not include data for the CAT C175-16 (quad turbocharged diesel engine) – the engine used in the 795F AC truck. Given the rated gross power of a CAT 795F AC truck at 2,536 kW, the available graph for a CAT 797B with a 2,648 kW rated power was chosen to estimate engine fuel burn at different loads. The data is listed in Table 3.

Table 3: Rate of fuel delivery at different mechanical power values

CAT 797B (fuel rate values were measured from the graph)				
Fuel Density = 0.8389 kg/L				
Fuel Lower Heating Value = 42,780 kJ/kg				
Gross Power = 2,648 kW				
Load	kW (Mechanical)	L/hr	Fuel (KJ/sec)	%Efficiency
20%	529.6	135	1345.8	39.4
30%	794.4	200	1993.8	39.8
40%	1059.2	265	2641.8	40.1
50%	1324.0	335	3339.6	39.6

Fitting the best line to this data, a general equation was found to calculate the fuel burn at different power requirements. From the data, engine efficiency is approximately 40% (See Table 3).

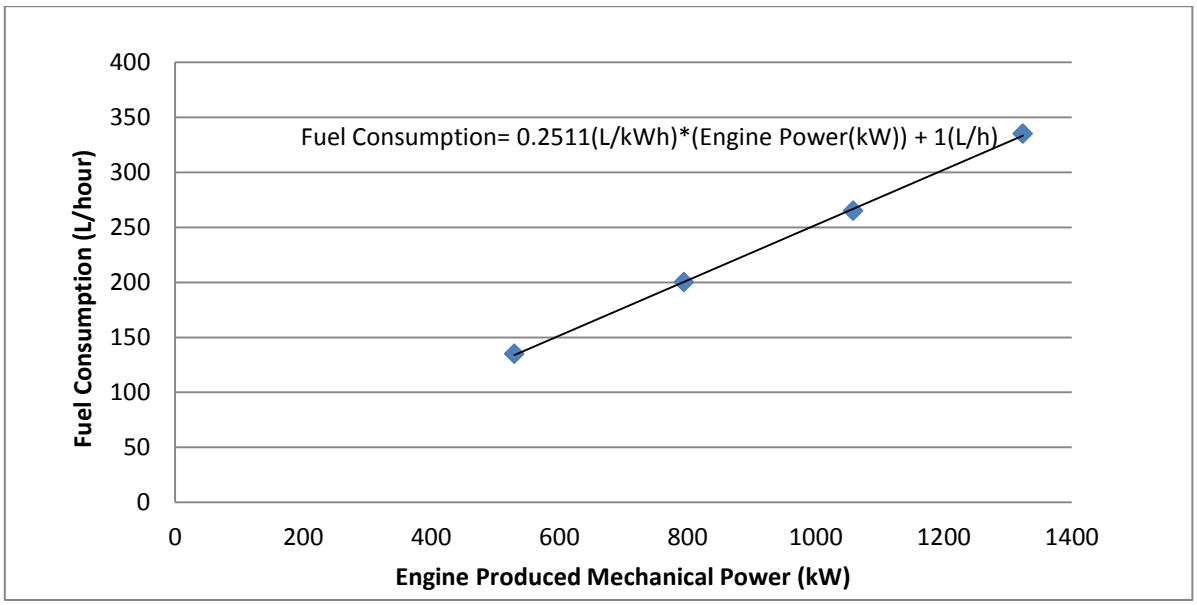

Figure 12: Estimated Fuel Consumption as a function of Mechanical Power Produced.

Note that the line in Figure 12 doesn't pass through the origin indicating a fuel burn of about 1 L/hr when no engine power is delivered at the shaft and assuming a continuing linear relation below 20% load factor. This value may represent the fuel burnt purely due to frictional forces and losses in the engine (the fuel burn when there is no mechanical power delivered at the engine shaft). The data suggests that for engine load factors between 20% and 50%, the rate of fuel burn is linearly related to mechanical power produced by the engine. This is not necessarily true outside this power factor range and the relation is really governed by the engine's BSFC map. Since a BSFC map is unavailable, the data was linearly extrapolated to obtain fuel burn rates at power levels above 50% and below 20%. The validity of this assumption is critical if the purpose was to calculate a value for fuel consumption of a truck over a full driving cycle. However, this assumption is not so crucial here, since the purpose of this work is to identify the relative difference in fuel economies between the diesel-electric truck and its hybrid-electric counterpart. As such, any inaccuracies will likely affect both systems in a similar fashion.

The goal is to find the relative savings in fuel consumption provided by 1) optimizing engine operation over the BSFC map and 2) capturing, storing, and reusing potential energy available from the elevation change. As discussed, the hybrid vehicle’s flexibility to shift operation of the engine around the BSFC map provides a better overall cycle fuel economy. Intensive simulations are needed along with the BSFC curves and detailed technical information to accurately characterize the latter, which is beyond the scope of this research. However, one may conservatively estimate such savings by comparing fuel consumption of

conventional vs. hybrid vehicles on the highway. The reason for this approach is that unlike city driving, there aren't many stop and go conditions for a haul truck in a mine, and much of HEV savings in city driving is due to the engine-off operation when stopped together with stop and go activities. As such, fuel economy improvement provided by the HEV system on the highway largely reflects savings from BSFC optimization and not from savings provided by engine-off operation and regenerative braking. It is recognized that an HEV haul truck can benefit from engine-off operation during some portions of the cycle (loading, dumping, positioning under the shovel, and downhill travel), which is not considered in this analysis since engine data is not available. Table 4 lists a number of 2014 model year vehicles with their conventional and HEV fuel consumptions listed. Vehicles were selected such that the conventional and HEV versions both have the same engine size.

Table 4: Highway fuel economy improvement of some HEVs
(US Environmental Protection Agency, 2014)

	Non-HEV Highway MPG	HEV Highway MPG	Highway Fuel Savings
Toyota Camry	35	39	11.4%
Toyota Highlander	24	28	16.7%
Porsche Cayenne S	22	24	9.1%
Kia Optima Hybrid	34	40	17.6%
Acura RLX	31	32	3.2%
Infinity Q50	31	34	9.7%
Average	30	33	11.3%

This suggests an average fuel economy improvement of about 11% due to engine BSFC optimization.

To calculate fuel savings provided by capturing, storing, and re-using potential energy due to elevation change a few parameters need to be considered. Parreira (2013) suggested an idling fuel consumption of 27 L/hour for a CAT 793D truck at an engine power level of 111 kW. Some of this power is lost in the torque convertor/transmission while the rest is used to drive accessories such as power steering, brakes, cooling pumps, air conditioning, etc. This value will be used to conduct analysis on the 795F AC. It is also assumed that all of the 111 kW idling power is required and must derive from the battery when the engine is off in the case of the hybrid. In reality, less than this power is required when the engine is off because of the lack of some engine frictional losses and better control over power supplied to auxiliary units. A value of 111 kW will nevertheless be used to compensate for the larger truck size being studied in this work. Figure 13 shows the scenario to be studied. Parameters are tabulated in Table 5. The truck is assumed to travel 100 m each to position at the dump site and at the loading point.

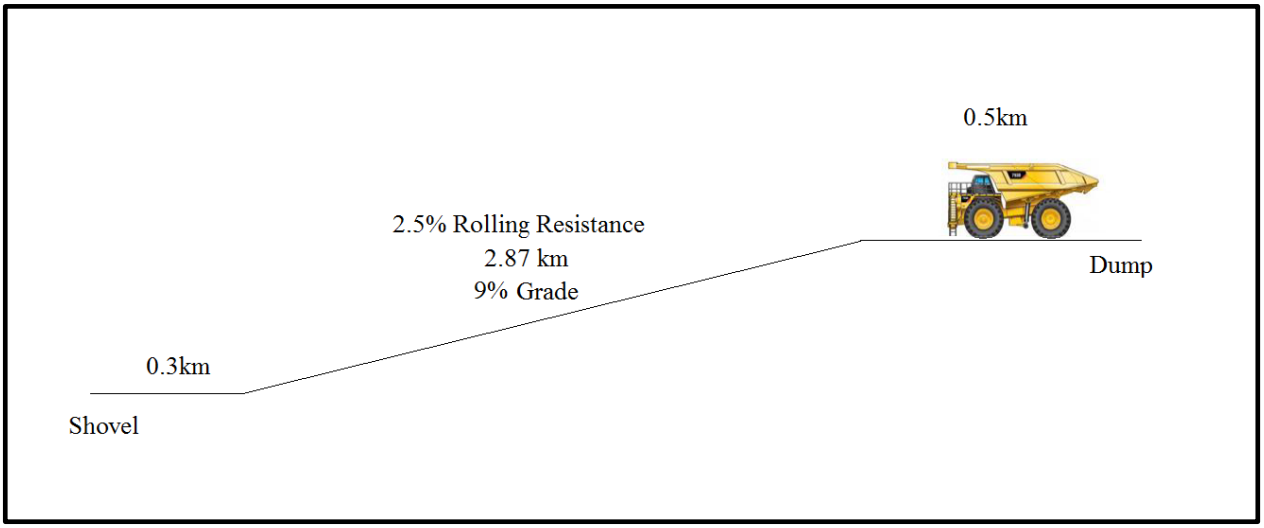

Figure 13: Road haulage segments to be considered in this study

Table 5: Mine and truck parameters

Truck	CAT 795F AC
Pit Depth	250 m
Rolling Resistance	2.5%[4]
Net Power	2,536 kW
Empty Weight	256,770 kg
Loaded Weight	570,678 kg

For each segment of the cycle, the total required driving force at the wheel-road interface to keep the vehicle at constant speed (Rimpull) is calculated as follows:

$$Total\ Driving\ Force = mg(Rolling\ Resistance + Grade\ Resistance) + Air\ Drag\ Force$$

where m is mass and g is gravitational acceleration.

Rolling and grade resistances represent the force required as a percentage of total truck weight in order to overcome the rolling resistance of the tires and the grade of the road respectively.

For segments where the truck is in a queue, the resisting forces do not apply. Table 6 outlines each segment of the truck travel. The speeds shown are based on typical speed limits and the capability of the truck in each segment. Rimpull is the force that must be generated at the wheel to overcome the total resistance and move the truck forward at constant speed. The associated power is acquired from the following equation:

[4] Value of 2-2.7% is suggested for compact gravel haul road (Regensburg & Tannant, 2001)

$$Power = force * speed$$

where force is the rimpull and speed is given.

The calculations assume constant speed along each segment and do not consider the effects of acceleration and deceleration at the transition from one segment to the next. This is not expected to change the results significantly since the effects cancel out each other if braking is not used (letting the truck coast to a slower speed or stop). If brakes are used, the hybrid system will have the advantage due to regenerative braking. The total required energy for each segment is roughly the same regardless of speed given the linear relation assumed for fuel burn vs. power. The only loss dependent on speed is aerodynamic drag. This force represents only about 10% of rimpull at the maximum speed considered here (see Table 6). For example, in Table 6, the maximum ratio between aerodynamic drag force and the required rimpull force is about 10%. Hence the rate of acceleration and deceleration which affects losses due to aerodynamic drag is not considered. In other words, each segment is considered to be travelled at a constant speed with aerodynamic losses being calculated accordingly.

Auxiliary power accounts for auxiliary loads such as power steering. The time for each segment is obtained by dividing distance by speed. The time for queuing, loading, and dumping are suggested by Meech (2013). Fuel consumption rate is calculated using the Equation displayed in Figure 12.

The idea of a hybrid-electric system is to capture the available potential energy and minimize engine use, particularly when the truck is stopped. Available potential energy to be captured is the total potential energy difference due to elevation change minus losses due to resistance on the way down:

$$Available\ potential\ energy = mgh - mgrd - F_D d$$

where m is mass of the empty truck, g is gravitational acceleration, r is rolling resistance, d is distance of the downhill segment, and F_D is air drag.

An efficiency of 90% is considered for converting mechanical energy to electrical energy and storing it in the battery in the form of chemical energy. Hence, the useful battery capacity is 90% of the available potential energy. Similarly, an efficiency of 90% is considered for pulling the chemical energy from the battery and changing it into electrical and then mechanical energy at the wheels. This provides a full cycle efficiency of about 81% for motors and energy storage, i.e., the efficiency to convert mechanical energy at the motors into electrical energy, store this in the battery, discharge it from the battery, and convert it back to mechanical energy through the motor. Stored energy replaces the work of the engine during idle and low engine power settings. Anything left over assists the engine during the uphill segment. Fuel savings are obtained by comparing total energy required with energy available from the battery. Note that a small amount of the useful load is lost due to the battery weight. This productivity loss is accounted for in the economic analysis. The effect of air resistance on aerodynamic drag force is given by:

$$F_D = \frac{1}{2}\rho v^2 C_D A$$

where ρ = air density (1.275 kg/m^3), v = truck speed with respect to air speed, A = cross-sectional area of the truck front = WH = 9.4 x 7.8 (73.3 m^2), (CAT 795F AC Manual), and C_d is the drag coefficient.

A drag coefficient value of 1.5 is suggested by S.F. Hoerner (1965), for a rectangular-shaped object with sharp corners (approximate shape of the truck).

For each segment:

$$Fuel\ rate = \frac{0.2511L}{kWh}(Mechanical\ Power) + \frac{1L}{h}$$

where fuel rate is given in litres per hour and mechanical power is in kilowatts.

The segment fuel use can be determined by multiplying by time t spent to travel the segment:

$$Segment\ Fuel = \frac{0.2511L}{kWh}(Mechanical\ Power)t + t(\frac{1L}{h}) =$$

$$\frac{0.2511L}{kWh}(Segment\ Energy) + t(\frac{1L}{h})$$

Hence, the total fuel burnt in the cycle is:

$$Total\ Cycle\ Fuel = \sum_{n=1}^{m}(\frac{0.2511L}{kWh}(Segment\ Energy)_n + t_n(\frac{1L}{h}))$$

Rewriting the above equation:

$$Total\ Cycle\ Fuel = \sum_{n=1}^{m} \frac{0.2511L}{kWh}(Segment\ Energy)_n\ +\ Cycle\ Time(\frac{1L}{h})$$

$$Total\ Cycle\ Fuel = \frac{0.2511L}{kWh}(Total\ Cycle\ Energy) +\ Cycle\ Time(\frac{1L}{h})$$

Dividing the equation by the cycle time:

$$Average\ Cycle\ Fuel\ Burn\ Rate = \frac{0.2511L}{kWh}(Average\ Cycle\ Power) + \frac{1L}{h}$$

This implies, given the linear relationship between fuel consumption and mechanical power, regardless of how the same total required mechanical energy is distributed over different segments of the cycle, the total fuel burned in the cycle is the same. This relationship is used to simplify the calculations as follows. The total potential energy available for storing can be calculated and is used to assist the engine to reduce the amount of energy required from the engine. Given the linearity simplification, it doesn't matter where or when the stored energy is used to assist the engine. To calculate the hybrid system cycle fuel, the following equation can be applied:

$$Reduced\ Cycle\ Fuel\ due\ to\ Elevation\ Change$$
$$= \frac{0.2511L}{kWh}(Cycle\ Energy - Stored\ Energy) +\ Cycle\ Time(\frac{1L}{h})$$

Stored energy is the amount of energy that becomes mechanically available at the wheels after storage and conversion efficiencies are taken into account.

Table 6 lists all the segments for the example case given above showing the calculated fuel savings. The total power required in each segment is the sum of power for the driving force and that required for the auxiliary systems. The power value is converted to the fuel burn rate using the linear relationship between the two parameters. The fuel burn rate multiplied by time in each segment gives the fuel burnt in the segment. The total storable energy is calculated and multiplied by the conversion and storage efficiency factor (this also yields the required useful capacity of the battery). The overall cycle fuel savings provided by the hybrid system due to elevation change is given by:

$$Fuel\ Savings\ due\ to\ elevation\ change$$

$$= 1 - \frac{\frac{0.2511L}{kWh}(Cycle\ Energy - Stored\ Energy) + \ Cycle\ Time(\frac{1L}{h})}{\frac{0.2511L}{kWh}(Cycle\ Energy) + Cycle\ Time(\frac{1L}{h})}$$

The total overall hybrid fuel savings is the effective sum of savings due to BSFC optimization and that resulting from elevation change. Considering an average fuel savings of 11% due to BSFC optimization:

$$Total\ Hybrid\ Fuel\ Savings$$

$$= 1 - \left[\left(\frac{\frac{0.2511L}{kWh}(Cycle\ Energy - Stored\ Energy) + \ Cycle\ Time(\frac{1L}{h})}{\frac{0.2511L}{kWh}(Cycle\ Energy) + Cycle\ Time(\frac{1L}{h})}\right) * (1 - 11\%)\right]$$

Table 6: Data and fuel consumed in each segment of the haul cycle

Haul profile	Total mass (tonnes)	Slope (°)	Distance (km)	Speed (km/h)	Grade resist. (%)	Rolling resist. (%)	Total resist. (%)	Air drag (kN)	Total rimpull needed (kN)	Rimpull power (kW)	Aux. power (kW)	Total power (kW)	Time (min)	Fuel rate (L/hr)	Fuel burned (L)	Energy required (kWh)
Dump to pit	257	0	0.50	35	0.0	2.5	2.5	6.7	70	676	110	786	0.9	198.4	2.8	11.2
Haul empty downhill	257	-5	2.87	30	-8.7	2.5	-6.2	4.9		0	111	111	5.7	28.9	2.8	10.6
Pit bottom to shovel	257	0	0.30	35	0.0	2.5	2.5	6.7	70	676	111	787	0.5	198.7	1.7	6.7
Queuing	257									0	111	111	3.0	28.9	1.4	5.6
Drive under shovel	257	0	0.10	15	0.0	2.5	2.5	1.2	64	267	111	378	0.4	96.0	0.6	2.5
Loading										0	111	111	3.0	28.9	1.4	5.6
Shovel to pit road	571	0	0.30	25	0.0	2.5	2.5	3.4	143	995	111	1,106	0.7	278.6	3.3	13.3
Haul uphill	571	5	2.87	12	8.7	2.5	11.2	0.8	630	2100	111	2,211	14.3	556.1	132.9	528.4
Pit to dump	571	0	0.50	25	0.0	2.5	2.5	3.4	143	995	111	1,106	1.2	278.6	5.6	22.1
Position for dump	571	0	0.10	15	0.0	2.5	2.5	1.2	141	588	111	699	0.4	176.4	1.2	4.7
Dumping										0	111	111	1.0	28.9	0.5	1.9
Totals			7.54										31.2		154.3	612.5

Battery useful capacity (kWh)	112.2
Available energy full battery (kWh)	100.9
Conventional cycle fuel	154.3
Hybrid fuel savings from regenerative braking	16.4%
Hybrid fuel savings from BSFC optimization	11.0%
Combined hybrid fuel savings	25.6%

A specific case has been examined with suggested values for various parameters. The results suggest a fuel savings of 25.6%. These are savings from 1) stored energy from regenerative braking on downhill travel and 2) engine BSFC optimization. Considering the savings due to regenerative braking during deceleration is beyond the scope of this research.

The loss in productivity due to battery weight also needs to be considered. Let's consider a fixed number of tonnes T that need to be transported. For the conventional truck with useful load capacity C and required fuel per cycle F:

$$Number\ of\ Trips\ (Conventional\ Truck) = \frac{T}{C}$$

$$Total\ Fuel\ (conventional) = Number\ of\ Trips * F = \frac{T}{C} * F$$

Now with the same truck equipped with an add-on hybrid system:

$$Number\ of\ Trips\ (hybrid\ truck) = \frac{T}{C - Battery\ Weight}$$

$$Total\ Fuel\ (Hybrid) = \frac{T}{C - Battery\ Weight} * F * (1 - Hybrid\ Fuel\ Savings)$$

The effective fuel savings is:

$$Effective\ Fuel\ Savings = 1 - \frac{Total\ Fuel\ (Hybrid)}{Total\ Fuel\ (Conventional)}$$

$$= 1 - \frac{\frac{T * F}{C - Battery\ Weight}(1 - Hybrid\ Fuel\ Savings)}{\frac{T}{C} * F}$$

$$= 1 - \frac{(1 - Hybrid\ Fuel\ Savings) * C}{C - Battery\ Weight}$$

To put this into perspective, assuming a capacity of 314 tonnes, an effective battery weight of 4 tonnes, and hybrid fuel savings of 25.6%:

$$Effective\ Fuel\ Savings = 100\% - \frac{(100\% - 25.6\%) * 314}{314 - 4} = 24.6\%$$

So for this example, the fuel savings is effectively regressed by about 1% due the productivity loss due to the dead weight of the battery on-board.

4.2 Parameter Sensitivity Analysis

Not all mines will have the same conditions so it is important to conduct a Monte Carlo simulation to determine the sensitivity of some of the important parameters. A sensitivity analysis on some key parameters will now be presented: with one variable changed at a time and the remaining ones held constant to determine the impact on fuel savings performance resulting from capturing and reusing energy (elevation change) only. These parameters are not expected to impact savings due to BSFC optimization.

4.2.1 Pit Depth

In this case, the slope and rolling resistance were fixed at 5° and 2.5% respectively. The change in fuel savings is plotted as a function of pit depth in Figure 14.

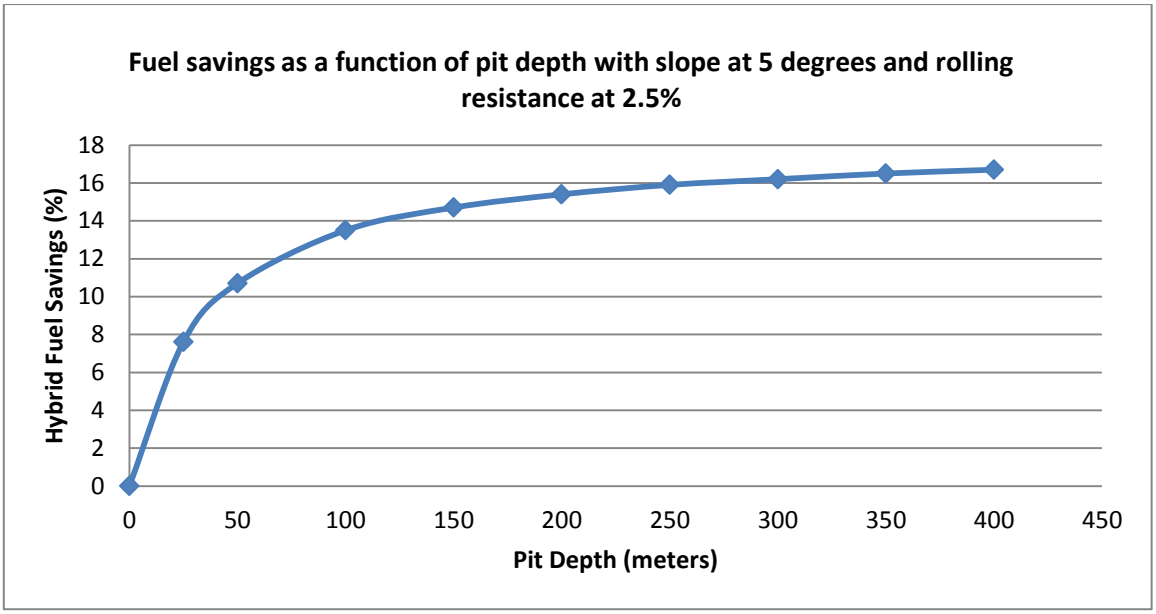

Figure 14: Fuel savings (%) vs. pit depth with fixed slope and rolling resistance.

The fuel savings is observed to increase with increasing pit depth as would be expected - the deeper the pit, the more energy that can be captured for use whereas with the conventional vehicle all of the potential energy due to elevation change is lost. The overall fuel consumption increases for both a conventional truck and its hybrid counterpart as the pit becomes deeper. However, the difference in fuel economies of the two becomes larger. There is a plateauing effect seen on the curve which implies the rate of fuel economy percentage improvement is reduced as the pit gets deeper and deeper. The reason for the plateau effect is the decreasing ratio of time spent on flat segments to the time spent on the slope. If one assumes 200 Joules are required for the truck to go up-slope and 30 Joules to travel on the flat haul roads and that the truck can capture about 36 Joules on the down-slope, then the energy that a conventional truck needs from fossil fuel would be 200 plus 30 (= 230 Joules) and the energy that the hybrid-electric truck needs is 230 minus 36 (= 194 Joules). That gives a ratio of 84.3%. If the height (and slope length)

is doubled with all other parameters remaining the same, the three numbers become 400, 30, and 72 Joules respectively resulting in a ratio of 83.3%. At an infinitely long upslope, the energy required in the flat zone becomes insignificant compared to the climb energy and the fuel savings ratio approaches 82%, hence the plateauing effect. Even though the ratio doesn't increase, the difference in the number of L/cycle is increasing between the two systems. Figure 15 represents the same case except fuel savings are displayed in L/cycle. The linear relationship confirms that the gap in fuel savings between conventional and hybrid trucks is increasing.

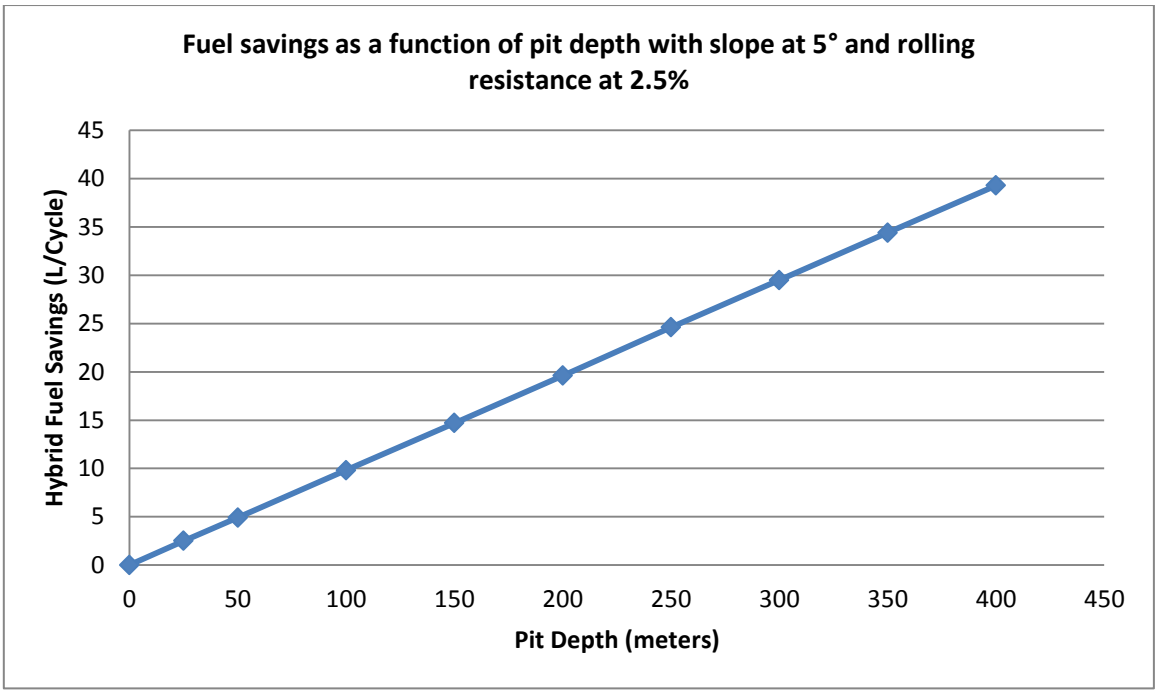

Figure 15: Fuel savings (L/Cycle) as a function of pit depth with fixed slope and rolling resistance.

4.2.2 Pit Road Grade

For this case, the pit depth and rolling resistance were fixed at 200 m and 2.5% respectively and the fuel savings plotted as a function of pit road slope.

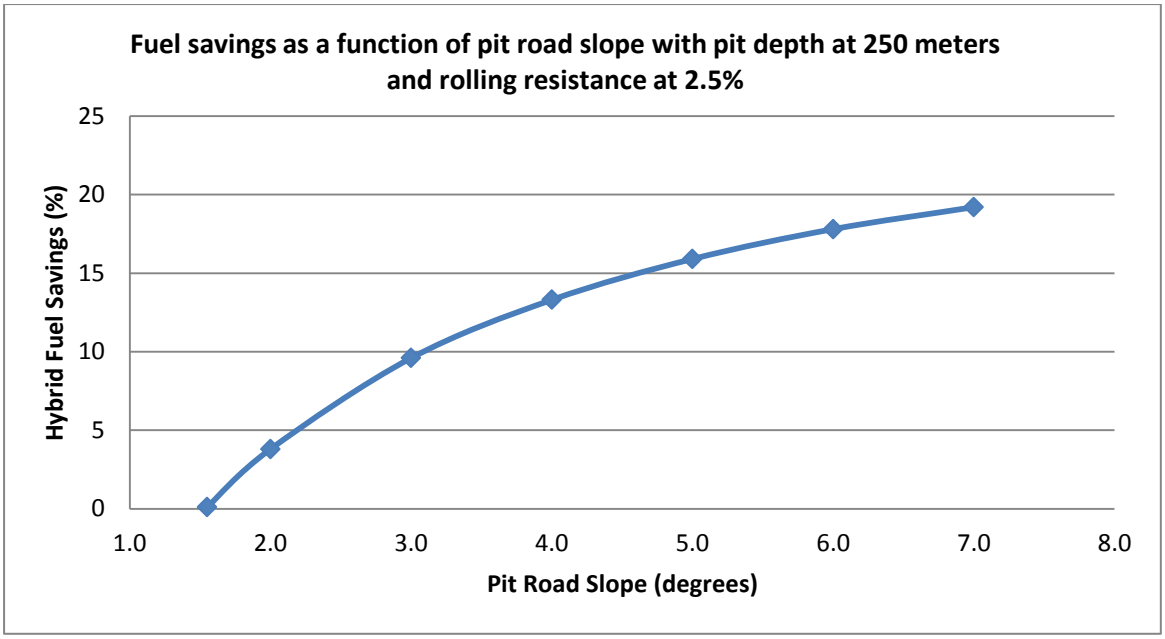

Figure 16: Fuel savings vs. road slope with fixed pit depth and rolling resistance.

Figure 16 shows that fuel savings increase with increasing road grade because for the same pit depth, the road with the higher slope is shorter which in turn reduces the distance on which rolling resistance losses are encountered. One may think that the smaller loss to rolling resistance would also improve the fuel economy of the conventional truck, but since the conventional truck doesn't capture any of the potential energy in the downhill travel, improvement is more pronounced with the hybrid truck. This occurs because the amount of storable energy is also reduced with rolling resistance losses on the downhill segment. This suggests an increased economic advantage of steeper pit roads when using hybrid electric trucks. Note that the rate at which reduction in losses due to rolling resistance occurs, decreases with increasing slope (i.e., the losses due to rolling resistance become zero when the slope goes to infinity). This accounts for the plateau seen in the graph.

4.2.3 Rolling Resistance

Finally, the effect of rolling resistance on fuel economy is studied by keeping the road slope at 5 degrees and pit depth at 250 meters while varying the rolling resistance.

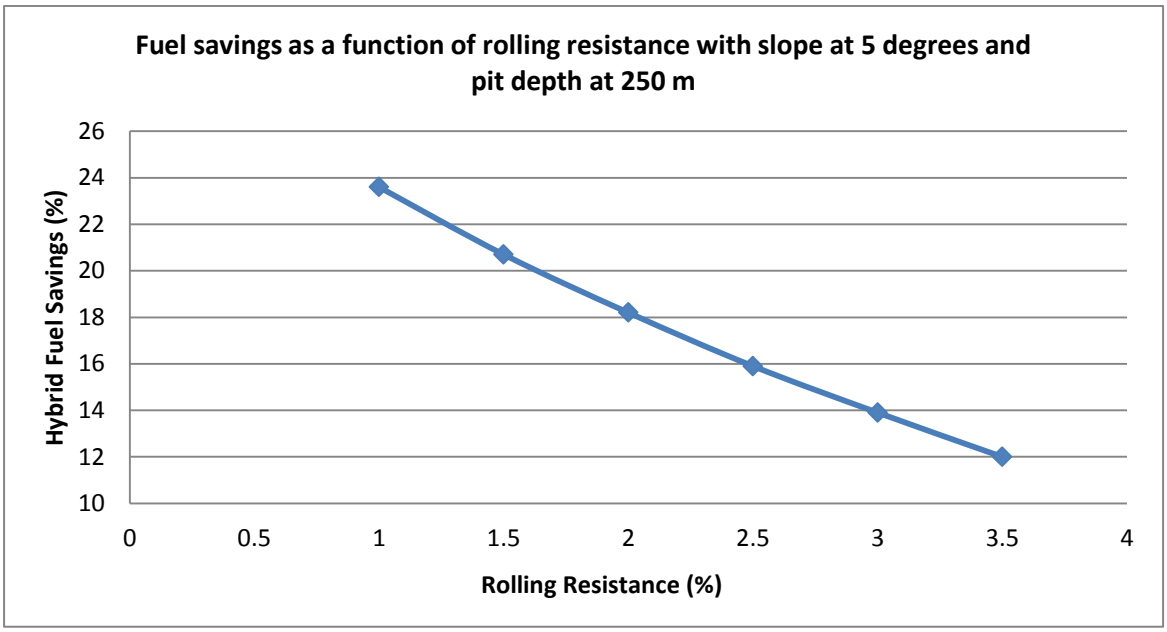

Figure 17: Fuel savings vs. rolling resistance with fixed slope and pit depth.

This result is a relatively linear decline in hybrid fuel economy performance as rolling resistance increases due to the additional energy loss encountered in the downhill segment. This loss does not affect the conventional vehicle since no energy is recovered on any segment of the road. The hybrid system does however lose out on recovering as much energy as at a lower rolling resistance, so fuel economy regresses. Note that at some value of rolling resistance, the hybrid fuel economy matches the conventional system. That is the point where the force from the rolling resistance completely cancels out the gravitational force along the grade on the downhill segment and hence any regenerative braking will result in slowing and stopping of the truck. These results

demonstrate an increased importance to perform consistent and reliable road maintenance if hybrid vehicles are used.

4.3 Estimation of Implementation Costs

4.3.1 Component Costs

4.3.1.1 Energy Storage System

As mentioned previously, the major additional piece to be added to a current diesel-electric haul truck is the battery. To estimate battery cost, the price of a replacement battery for a Tesla Motors Model S vehicle is considered. The reason for this choice is because Tesla is well ahead of other electric car manufacturers in available range and battery capacity (Davies & Nudelman, 2013) which is critical for regenerative braking of a large vehicle such as a haul truck. Bullis, (2013), has referenced Tesla Motors' Chief Technology Officer as saying the battery for the Tesla Model S vehicle represents about a quarter or less of the total vehicle price and that they are working with suppliers to drive the cost down further. With a starting price tag of $69,900 USD for the 60 kWh model (Tesla Motors, 2013), one estimate yields around $17,500 USD for the price of the battery. Fisher (2013), quotes Tesla's CEO, Elon Musk as saying "improvements will cut the cost of the Model S's battery to $10,000-$12,000". Tesla Motors has made plans for a $5 billion battery Giga-Factory and suggests it will reach a scale to cut the battery cost by 30% to around $10,000 (Wesoff, 2013). The rated vehicle power for the performance model is listed at 302 hp or 225 kW (Tesla Motors, 2013). This number can be considered the discharge power limit of the battery. The previous

case study indicated the need for a 108.7 kWh capacity for the battery for a mine haulage truck application (250 m pit depth, 5° slope, 2.5% rolling resistance). With the exception of the uphill segment, the highest power discharge requirement is 1,106 kW. The uphill segment is not considered because it is expected that the engine will operate to supply most of the power in the uphill climb with battery energy used to supplement fuel energy where needed. During flat runs, low speeds, and stops, the battery can be relied on exclusively. To size the battery to run the truck uphill without engine power is neither realistic nor sensible. Regenerative braking power must also be considered in the downhill segment (the battery charging power limit). In the example presented in Section 4.1, the power absorbed by the motors and charged to the battery is given by:

$$Charge\ Power = Regenerative\ Force * Speed$$

The required regenerative force to keep the vehicle at a constant speed is given by:

$$Regenerative\ Force = (mg(Grade\ Res. - Rolling\ Res) - Drag\ Force)$$

where m is the empty mass of the truck and g is the gravitational acceleration.

Using the case study example parameters, charge power is calculated as follows:

$$Charge\ Power = \left((256770kg)(9.8\frac{m}{s^2})(8.7\% - 2.5\%) - 4890N\right) * \left(\frac{30}{3.6}\frac{m}{s}\right)$$

$$= 1259\ kW$$

Further information is needed because the battery charging power limit may be quite different from its discharge limit.

According to Fisher (2013) Tesla uses thousands of NCR18650A 3100mAh cells made by Panasonic. The cells are rated at 3.6 V resulting in a nominal capacity of

$$Cell\ Capacity = 3.1\ Ah * 3.6v = 11.2\ Wh$$

The charge power rating for the cell is shown as 4.2 V at a maximum current of 885 mA yielding a charging power limit of:

$$Charging\ power\ limit = 4.2\ V * 0.885\ A = 3.7\ W$$

Furthermore, the maximum discharge current rating shown is 5.9A yielding:

$$Nominal\ discharge\ power\ limit = 3.6\ V * 5.9\ A = 21.24\ W$$

Next, the limiting factor must be considered to size the battery pack. Given the capacity requirement of 108 kWh, a charge limit of 3.7 W, and a discharge limit of 21 W:

$$Required\ number\ of\ cells\ (based\ on\ capacity) = \frac{108kWh}{11.2Wh} = 9{,}643$$

$$Required\ number\ of\ cells\ (based\ on\ charge\ power) = \frac{1259kW}{3.7W} = 340{,}270$$

$$Required\ number\ of\ cells\ (based\ on\ discharge\ power) = \frac{1106kW}{21W} = 52{,}667$$

Clearly, the charging power limit is the bottleneck by far. According to Fisher (2013), “The Panasonic cells that Tesla uses are advertised with ‘best pricing’ that ranges from $0.80 to $2 and up per cell.” However, the price per cell can be quite different when sold as a single cell versus a module of many cells put together with a control system and

internal wiring. For this purpose, the number of individual cells in a Tesla Model S is estimated:

$$Number\ of\ cells\ in\ a\ Tesla\ Model\ S\ vehicle = \frac{65\ kWh}{11.2\ Wh} = 5{,}803$$

The required number of Tesla sized battery packs is then estimated.

$$Number\ of\ required\ Tesla\ battery\ packs = \frac{340{,}270}{5{,}803} = 59$$

The primary reason for the very large number of units and cost is the battery charge limit. However, the additional capacity and discharge power that becomes available with this many cells have some benefits which will be discussed later. But first, this number will now be used to estimate overall battery cost in the haul truck. Using the suggested price of $10,000 per unit:

$$Battery\ cost = 59 * \$10{,}000 = \$590{,}000$$

Note that this analysis is only to provide a first-order cost estimate of the batteries and is based on parameters listed in Section 4.4. This number will vary with the downhill speed of the truck, truck weight, and road grade. For example, if instead of 30 kph, the truck travels downhill at 20 kph, the battery size drops by 67%. To do a comparison, given Fisher's suggestion of $0.80-$2.0 cost per cell:

$$Battery\ cost\ (low) = cell\ cost * number\ of\ cells = \$0.80 * 340{,}270 = \$272{,}216$$

$$Battery\ cost\ \ (high) = cell\ cost * number\ of\ cells = \$2.0 * 340{,}270 = \$680{,}540$$

The number arrived at using the Tesla battery cost will fall in the range above. To be conservative, the highest estimate of $680,000 will be used in the economic analysis.

As mentioned previously, battery weight also needs to be considered for the economic analysis as the dead weight on-board affects productivity. The weight of each cell is specified as 45.5g (Panasonic, 2011). After accounting for 5% additional weight due to wiring and controllers, one can yield a total battery weight of:

$$Battery\ weight = 45.5g * 340{,}270 * 105\% \approx 16\ tonnes$$

Considering a hybrid fuel saving of at 25.6%, the effective fuel saving for a CAT 795F AC truck becomes:

$$Effective\ Fuel\ Savings = 100\% - \frac{(100\% - \%\ Hybrid\ Fuel\ Savings) * Capacity}{Capacity - Battery\ Weight}$$

$$= 100\% - \frac{(100\% - 25.6\%) * 313}{313 - 16} = 21.5\%$$

This is a regression that depicts how dead weight affects effective fuel economy. Despite this, the cells provide much more than required additional available capacity and discharge power. Considering the available discharge power from this number of cells:

$$Available\ discharge\ power = 21\ W * 340{,}270 = 7{,}146kW$$

This is almost double the amount of power rating of the CAT 795F AC truck, which means the batteries can supply enough power to drive the truck up the pit road without engine power. This can lead to a reduction in engine size and weight as the engine power can be supplemented with electrical power available from the batteries.

Therefore, it can be considered that the dead weight of the battery is at least partially offset by using a smaller diesel engine on-board the hybrid truck. The C175-16 engine used in the 795F AC weights about 13 tonnes and is rated at 2,907 hp maximum as reported by CAT engine specifications. In the example considered in Section 4.1, the available energy absorbed by the battery (109 kWh) represents approximately 21% of the energy required to haul the full truck up the pit road (528 kWh). Therefore, the batteries can provide that fraction of the power if they were used continuously and exclusively up-hill. As a rough estimate, one can consider the engine size and weight can be reduced by:

$$Weight\ saved\ due\ to\ smaller\ engine = 13tonnes * 21\% = 3tonnes$$

This number is used to offset the dead weight of the battery for economic analysis calculations:

$$Effective\ dead\ weight = 16tonnes - 3tonnes = 13tonnes$$

4.3.1.2 Other Components

Other costs include wiring, motor(s) and controller(s) to support auxiliary systems such as power steering, air conditioning, and hydraulic brakes. Given the uncertainty of the cost of these components, an estimate of $100,000 has been assumed. It should be noted that some of these components are already present on a diesel-electric truck including drive motors, motor controllers, and generator.

4.3.2 Integration Costs

Costs are associated with the design of the new system to place the energy storage system, on-board the truck, integrate in the required wiring, implement control software for the vehicle, and other aspects. For the purposes of this analysis, this cost is estimated at about $200,000.

4.3.3 Total Costs

The total cost of implementation of a prototype is the sum of all the costs as mentioned above:

$$Total\ costs = battery\ cost + other\ component\ costs + system\ integration\ cost$$

$$= \$0.68M + \$0.10M + \$0.20M = \$0.98M$$

4.4 Net Present Value of Fuel Savings at Different Stages of Mine Life

In the previous section, the potential fuel savings were considered given a specific case of a mine with known road geometry and conditions. That is not the case in real life as conditions change as the mine development progresses (changing pit depth, changing waste dump height, etc.). An extension of this work to account for the time value of the benefit is given in this section, where use of hybrid electric haul trucks is examined at different stages of the mine life. The scenario considers the conditions listed in Table 7. In the study, it is assumed that trucks travel down the pit empty and return up-hill with a full load. There are mining cases where after a pit pushback, a truck may travel up out of the pit empty and return downhill with a full load. The assumption here is conservative

because the empty haul down-hill is less economically advantageous for regenerative braking.

Table 7: Investment payoff case study parameters

Ore mining rate (tpd)	70,000
Ore mining rate (tpy)	24,500,000
Volume of ore per year (m^3)	8,305,085
Overall strip ratio	1.5661
Waste mining rate (tpd)	109,627
Waste mining rate (tpy)	38,369,450
Volume of waste per year (m^3)	13,952,527
Volume strip ratio	1.6800
Operating days/year	350
In-situ S.G. of ore	2.95
In-situ S.G. of waste	2.75
Orebody Life (years)	20
Total volume mined (m^3)	445,152,240
Pit slope angle (°)	42
Swell factor	1.5
Truck type	CAT 795F AC
Gross machine weight (tonnes)	570.7
Empty weight (tonnes)	256.9
Hybrid dead weight added (tonnes)	14
Net power (kW)	2536
Truck width (m)	9.44
Truck height (m)	7.8
Auxiliary power (kW)	111
Mechanical availability per day (hr)	16
Coefficient of air drag C_d	1.5
Density of air (kg/m^3)	1.275
Days of operation	350
Project discount rate	7.0%
Up-front capital cost ($)	$980,000

Conditions for different years of the mine operation are changed accordingly for each year. These conditions include average road slopes, pit depth, waste dump height, and price of fuel. The pit is assumed to be a cone frustum with its depth calculated from the total in-situ volume mined. The waste dump is assumed to be square-shaped with its height calculated based on the cumulative volume of waste mined with the swell factor

taken into account. Average pit and waste dump road grades are assumed to increase over the life of mine. The distances on grades are calculated based on the elevation change and the road grade. Fuel prices start at $1.30/L in the first year and increase linearly at a rate of 3% per year.

The effective fuel savings are calculated based on these parameters where the calculation considers the production lost due to the dead battery weight added. The fuel savings for each truck is calculated per year based on fuel consumption and fuel cost. The results tabulated in Tables 8 and 9 show NPV values of purchasing and operating each hybrid electric truck over an assumed useful truck life of 7 or 10 years. The year value in the left column represents the mine life year in which the truck is purchased. The results are different for ore and waste trucks since routing and haul conditions are different. The NPV values give an indication of whether or not the additional cost of buying a hybrid electric truck is justified for the mine operation. The NPV calculation here is based on fuel savings and upfront capital cost only and does not consider reduced maintenance of engine and service brakes on the hybrid system or the additional maintenance that may be required for the hybrid system.

Table 8: NPV of fuel savings per ore trucks

Year purchased	7 year truck life	10 year truck life
1	$373,507	$1,188,778
2	$643,137	$1,500,173
3	$907,432	$1,816,856
4	$1,168,233	$2,126,192
5	$1,389,049	$2,431,095
6	$1,598,566	$2,708,882
7	$1,801,809	$2,982,281
8	$2,008,871	$3,261,782
9	$2,212,876	$3,543,506
10	$2,414,077	$3,828,871
11	$2,612,603	$4,119,632
12	$2,875,571	
13	$3,122,100	
14	$3,382,819	

Table 9: NPV of fuel savings per waste truck

Year purchased	7 year truck life	10 year truck life
1	$192,581	$838,071
2	$366,178	$1,063,811
3	$546,780	$1,296,315
4	$734,251	$1,535,167
5	$917,569	$1,779,586
6	$1,094,182	$2,019,691
7	$1,273,856	$2,265,534
8	$1,459,394	$2,519,136
9	$1,648,834	$2,781,667
10	$1,842,228	$3,054,349
11	$2,036,815	$3,339,087
12	$2,255,855	
13	$2,487,803	
14	$2,735,544	

For example, if an ore truck is purchased in year 10 of the mine life and used for 7 years, the NPV at the time of purchase is about $2.4M. In other words, in addition to paying for the capital cost of the hybrid conversion, the fuel cost savings from the hybrid

system over the truck life provide an additional $2.4M. Alternatively, if the same truck is used for 10 years, the NPV is about $3.8M. This doesn't account for an increase or decrease in costs due to maintenance, shop supplies and equipment, staff training, etc.

As evident from the results, the ore trucks provide more fuel cost savings vs. the waste trucks in this case. This difference is caused by the different conditions for the ore and waste routes. Namely, because of the much longer flat distance travelled by the waste trucks, the overall savings in fuel by the hybrid electric system is diluted. For the actual conditions listed for each table and the complete Excel spreadsheet database, refer to Appendix A. Note how the NPV values in the initial years are smaller. This is because in the initial years, the per cent savings are low due to a lower elevation change. It is recognized that, a change in parameters such as pit depth, road grade, and rolling resistance will change the economics. As such, the conditions of each mine should be carefully looked at to determine the suitability of the hybrid truck with regards to potential fuel saving. A complete multivariable sensitivity analysis is required to see the impact of these variables on the fuel economy. This is beyond the scope of this research.

Note that the dead battery weight impacts the effective fuel economy which in turn impacts the NPV values tabulated. Recall that the requirement of the very large battery was the bottle-neck from the charge power limit required to absorb all of the available potential energy as the 257-tonne-truck travels down a slope of 8.7% at 30kph with a rolling resistance of 2.5% with the Panasonic NCR18650A cells (same cells used in a Tesla Model S vehicle). It may actually be more economical to downsize the battery to absorb only a portion of the available potential energy, because of the potentially large

impact of battery weight on productivity loss. This investigation can be defined as a full optimization project and is beyond the scope of this thesis.

4.5 Investment Return

The critical question now needs to be answered: Does it make sense financially to implement a hybrid electric haul truck and do the benefits in fuel savings pay off for the risks and up-front capital costs?

For the purchase and usage of the hybrid-electric trucks to make financial sense, the NPV of purchasing the truck must be positive. The NPV tables in Section 4.4 show that the level of potential returns due to fuel savings is significant. The amount of fuel saved over the truck life assuming the same productivity (same tonnage transported) is governed by specific conditions of the mine – pit depth, road grade, ratio of sloping roads to flat roads, and fuel costs. Note that the analysis only accounts for savings due to elevation change and BSFC optimization. When elevation change is low (beginning of the mine life), hybrid savings are considerably reduced, hence the lower NPV in initial years of truck operation. The incremental NPV shows a significant advantage for a mine running 50 trucks with a difference in project economics of $150M or more, an amount that likely can justify pursuing the incremental purchase price of $50M.

5. CONCLUSIONS

- Until recently, production volume has been a higher priority for mining companies than deploying more efficient mining techniques because profit margins have been high enough given rising commodity prices that allow older, more-costly mining methods to be used and still produce a profitable project. With the recent drop in commodity prices, especially gold, and the continuing increase in energy costs, this approach has changed and miners must now look at ways to save costs.

- Application of a hybrid electric powertrain on mining haul trucks can provide substantial fuel savings. For the case study presented, a reduction of 11% and 16% in fuel consumption resulted from elevation change and engine BSFC optimization respectively with a combined improvement of 26%. The effective fuel savings regresses to 22% due to the added dead weight of the battery. Engine-off operation during idling will extend these savings, but these were not considered in this thesis due to lack of engine data.

- A second case study examined the economics of operating hybrid electric trucks over the life of the mine using the NPV method. The study was performed for truck lives of 7 and 10 years and took into consideration different conditions for ore and waste trucks over the life of the mine. In all cases, the NPV values were positive ranging from about $190,000 to $4,000,000 depending on the year of purchase and the life of the truck. The results suggest cash flow from fuel savings will pay off the additional capital cost of purchasing and operating such systems.

- The savings presented will be higher for scenarios where the truck travels up the pit empty and returns with a full load, such as a pit pushback on a hillside. The calculations in this thesis assume the opposite situation so this work can be considered a conservative analysis.

- It is recognized that a hybrid truck may not be suitable for all mines from a financial standpoint. This is due to the dependence of fuel economy savings on some of the mine parameters as shown by the sensitivity analysis.

- There are additional benefits to using hybrid-electric trucks such as:

    - Reduced number of trucks (better fleet utilization) because of the higher available rimpull from the duo of engine and battery energies.

    - Reduced brake and engine maintenance costs, because of the much reduced usage of the mechanical brakes and less engine load.

    - Reduced mine-generated pollution.

- The use of hybrid electric trucks requires special maintenance shops and staff training to service additional electrical components.

- It is recognized that with the mining sector interest in natural gas given its tremendous cost savings over diesel, the current tendency is to convert truck fleets to natural gas. As such, potential cost saving of a hybrid electric system installed on a natural gas-powered system is greatly reduced in comparison to diesel operation. However, a shift in the price of natural gas can completely change this scenario.

- It is recognized that some mines are trying to shift to more efficient truck-less operation to reduce material transport costs. The potentials of a hybrid electric system once it is reliably in operation may impact this tendency.

- With advancements in energy storage technologies and decreasing costs, the implementation of hybrid electric haul trucks will become more attractive and these systems will likely be featured on trucks in the near future.

6. REFERENCES

Gear, T. (Producer). (2009). *M3 vs. Prius* [Motion Picture]. Retrieved Jan 10, 2013, from http://www.topgear.com/au/videos/compass42

Panasonic. (2011). Retrieved from Panasonic: http://www.panasonic.com/industrial/includes/pdf/ACA4000CE254-NCR18650A.pdf

Model S Design Studio | Tesla Motors. (2013, Dec 10). Retrieved from Tesla Motors | Premium Electric Vehicles: http://www.teslamotors.com/en_CA/models/design

Beyond Borders. (2014, 05 08). Something's gotta give: Gold mining's energy challenge. *Beyond Borders*. Retrieved from http://barrickbeyondborders.com/2014/05/barrick-gold-mining-energy-challenge/

Bullis, K. (2013, August 7). How Tesla is driving electric car innovation. *MIT Technology Review*. Retrieved from http://www.technologyreview.com/news/516961/how-tesla-is-driving-electric-car-innovation/

Carollo, S. (2012). *Understanding oil prices : a guide to what drives the price of oil in today's markets.* Wiley.

CBC News. (2012, Oct 25). City could pay to turn hybrid buses into diesel buses. *CBC News*. Retrieved from http://www.cbc.ca/news/canada/ottawa/city-could-pay-to-turn-hybrid-buses-into-diesel-buses-1.1154110

Chambers, M. (2013). Shell sees market in LNG mining trucks - EXCLUSIVE. Retrieved from http://www.theaustralian.com.au/business/mining-energy/shell-sees-market-in-lng-mining-trucks/story-e6frg9df-1226611227069?nk=b4c0f443f93f95e406ca91879cc00b38

CNW Group. (2009, Dec 14). Azure Dynamics Receives Record Truck Order From Purolator Couriers. *CNW Group*. Retrieved from http://www.newswire.ca/en/story/457367/azure-dynamics-receives-record-truck-order-from-purolator-couriers

Davies, A., & Nudelman, M. (2013, Aug 16). Here's how Tesla's Model S compares to other top electric cars. *Business Insider*. Retrieved from http://www.businessinsider.com/electric-car-comparison-chart-2013-8

FC Gas Intelligence. (2014). *LNG for Mining Applications: Mining Industry Perspectives.*

Fisher, T. (2013, June 11). What Goes into A Tesla Model S Battery—And What It May Cost. *Green Car Reports*. Retrieved from http://www.greencarreports.com/news/1084682_what-goes-into-a-tesla-model-s-battery--and-what-it-may-cost

Fuel Economy. (n.d.). Retrieved Jan 30, 2013, from http://www.fueleconomy.gov/feg

Ganji, B., & Kouzani, A. (2010). A Study on Look-Ahead Control and Energy Management Strategies in Hybrid Electric Vehicles. *8th IEEE International Conference on Control and Automation (ICCA)*, (pp. 388-392). Xiamen, China. doi:10.1109/ICCA.2010.5524178

Gao, L., & Winfield, Z. C. (2012). Life Cycle Assessment of Environmental and Economic Impacts. *Energies, 5*(3), 605-620.

Hall, K. (2013, March 25). Australia's big miners add more driverless trucks. *Mining.com*. Retrieved from http://www.mining.com/australias-big-miners-add-more-driverless-trucks-88704/

Harrop, P. (2013, Jan 22). Supercapacitors to the rescue. *Energy Harvesting Journal*. Retrieved from http://www.electricvehiclesresearch.com/articles/supercapacitors-to-the-rescue-00005099.asp?sessionid=1

Hoerner, S. F. (1965). *Fluid-Dynamic Drag.* Hoerner, S. F.;.

Jensen, S. (2013, Dec 06). Electric Underground. *OEM Off-Highway*. Retrieved from http://www.oemoffhighway.com/article/11224086/electrification-of-underground-mining-equipment

Kecojevic, V., & Komljenovic, D. (2010). Haul truck fuel consumption and CO2 emission under various engine load conditions. *Mining Engineering, 62*(12), 44.

Koellner, W. (2008). The Future of Trolley Assist with AC Drivers. Retrieved from http://w3.usa.siemens.com/us/SiteCollectionDocuments/WSSResources/Internet/Misc/2008-04-25_10/TrolleyAssist.pdf

Lovejoy, C. (2013, July 24). Providing Power to the People. *Mining Magazine*. Retrieved from http://www.miningmagazine.com/equipment/providing-power-to-the-people?SQ_DESIGN_NAME=print_friendly

Mazumdar, J. (2011, Nov 23). The case for trolley assist. *Engineering and Mining Journal*. Retrieved from http://www.e-mj.com/features/1444-the-case-for-trolley-assist.html#.U8EHVvldXO4

Meech, J. (2013). Personal conversation with field expert. (E. Esfahanian, Interviewer)

Migneault, J. (2013, Dec). Ontario's high energy rates could jeopardize mining: energy makes up to 30 per cent of the costs for mining operations. *Northern Ontario Business*. Retrieved from http://www.northernontariobusiness.com/Industry-News/mining/2013/11/Energy-makes-up-to-30-per-cent-of-the-costs-for-mining-operations.aspx

Mining Technology. (2013, April 4). Vale to use conveyor belt technology at Brazilian iron ore mine. *Mining Technology*. Retrieved from http://www.mining-technology.com/news/newsvale-to-use-conveyor-belt-technology-in-brazilian-iron-ore-mine

Moore, P. (2011, March). In for the long haul. *International Mining*, pp. 31-39. Retrieved from http://www.infomine.com/library/publications/docs/internationalmining/Moore2011f.pdf

Nazri, G.-A., & Pistoia, G. (2009). *Lithium Batteries: Science and Technology.* Springer.

Newswire, P. (2013). Maxwell Technologies Supplying Ultracapacitors To Caterpillar For Energy Recuperation, Power Assist In Fuel-Efficient Hybrid Mining Shovel. *PR Newswire US*. Retrieved from http://www.prnewswire.com/news-releases/maxwell-technologies-supplying-ultracapacitors-to-caterpillar-for-energy-recuperation-power-assist-in-fuel-efficient-hybrid-mining-shovel-223115091.html

Ng, J. (2009, May 12). GE Transportation Announces $100 Million Battery Manufacturing Facility for Hybrids. *Daily Tech*. Retrieved from http://www.dailytech.com/GE%2BTransportation%2BAnnounces%2B100%2BMillion%2BBattery%2BManufacturing%2BFacility%2Bfor%2BHybrids/article15116.htm

Parreira, J. (2013, August). *An Interactive Simulation Model to Compare an Autonomous.* Retrieved from https://circle.ubc.ca/

Pikul, J. H., Gang Zhang, H., Cho, J., Braun, P. V., & King, W. P. (2013). High-power lithium ion microbatteries from interdigitated three-dimensional bicontinuous nanoporous electrodes. *Nature Communications, 4*(1732). doi:10.1038/ncomms2747

Rajashekara, K. (1994). History of Electric Vehicles in General Motors. *IEEE Transactions on Industry Applications, 30*(4), 897-904. doi:10.1109/28.297905

Regensburg, B., & Tannant, D. (2001). *Guidelines for Mine Haul Road Design.* Retrieved 2014, from https://circle.ubc.ca/bitstream/id/90332/haul_road_design_guidelines.pdf

Simon, P., & Gogotsi, Y. (2008). Materials for electrochemical capacitors. *Nature Materials, 7*(11). doi:10.1038/nmat2297

US Environmental Protection Agency. (2014). *Model Year 2014 Fuel Economy Guide.* Laurel: US Government Printing Office. Retrieved from http://www.fueleconomy.gov/feg/pdfs/guides/FEG2014.pdf

Vlad, A., Singh, N., Rolland, J., Melinte, S., Ajayan, P. M., & Gohy, J.-F. (2014). Hybrid supercapacitor-battery materials for fast electrochemical charge storage. *Scientific Reports*. doi:10.1038/srep04315

Vyas, A., Ng, H., Santini, D., & Anderson, J. (1997). *Electric and hybrid electric vehicles: A technology assessment based on a two-stage Delphi study.* United States. Dept. of Energy. Office of Energy Efficiency and Renewable Energy. doi:10.2172/650245

Wesoff, E. (2013, March 01). Tesla's $5B Giga Battery Factory and Deep Politics in AZ, TX, NV and NM. *Greentech Media*. Retrieved from https://www.greentechmedia.com/articles/read/Teslas-5B-Giga-Battery-Factory-and-Deep-Politics-in-AZ-TX-NV-and-NM

Wouk, V. (1997). Hybrid Electric Vehicles. *Scientific American, 277*(4), 70.

Xiong, W., Zhang, Y., & Lin, C. (2009). Optimal energy management for a series–parallel hybrid electric bus. *Energy Conversion and Management, 50*(7), 1730-1738.

Yoshio, M., Brodd, R. J., & Kozawa, A. (2009). *Lithium-Ion Batteries: Science and Technology.* Springer.

7. APPENDIX A

Calculating NPV for Purchasing and Operating Hybrid Electric Trucks to Carry Ore:

Year	1	2	3	4	5	6	7	8	9	10
annual volume of ore mined (m^3)	8,305,085	8,305,085	8,305,085	8,305,085	8,305,085	8,305,085	8,305,085	8,305,085	8,305,085	8,305,085
cumulative volume of ore mined (m^3)	8,305,085	16,610,169	24,915,254	33,220,339	41,525,424	49,830,508	58,135,593	66,440,678	74,745,763	83,050,847
annual in-situ volume of waste mined (m^3)	13,952,527	13,952,527	13,952,527	13,952,527	13,952,527	13,952,527	13,952,527	13,952,527	13,952,527	13,952,527
cumulative in-situ volume of waste mined (m^3)	13,952,527	27,905,055	41,857,582	55,810,109	69,762,636	83,715,164	97,667,691	111,620,218	125,572,745	139,525,273
cumulative in-situ volume mined (m^3)	22,257,612	44,515,224	66,772,836	89,030,448	111,288,060	133,545,672	155,803,284	178,060,896	200,318,508	222,576,120
pit depth at end of year (m)	11.1	22.7	34.6	46.9	59.7	73.0	86.9	101.4	116.6	132.6
average pit road grade (%)	4.6%	5.5%	6.0%	6.5%	7.6%	7.7%	7.8%	7.9%	8.0%	8.1%
calculated road length on descent (km)	0.243	0.413	0.577	0.723	0.788	0.951	1.117	1.287	1.462	1.643
velocity on climb (kph)	15	15	15	14	14	14	13	13	13	13
velocity on descent (kph)	35	35	35	30	30	30	30	30	30	30
time to climb (min)	0.97	1.65	2.31	3.10	3.38	4.07	5.16	5.94	6.75	7.58
time to descend (min)	0.42	0.71	0.99	1.45	1.58	1.90	2.23	2.57	2.92	3.29
distance on flats between pit and dump (km)	0.9	0.9	0.9	0.9	0.9	0.9	0.9	0.9	0.9	0.9
average rolling resistance	2.5%	2.5%	2.5%	2.5%	2.5%	2.5%	2.5%	2.5%	2.5%	2.5%
velocity on flats (kph)	35	35	35	35	35	35	35	35	35	35
total time on flats - both ways (min)	3.09	3.09	3.09	3.09	3.09	3.09	3.09	3.09	3.09	3.09
total spotting time at loader and at dump (min)	1.50	1.50	1.50	1.50	1.50	1.50	1.50	1.50	1.50	1.50
queuing time at loader and dump (min)	1.00	1.00	1.00	1.00	1.00	1.00	1.00	1.00	1.00	1.00
loading time (min)	2.00	2.00	2.00	2.00	2.00	2.00	2.00	2.00	2.00	2.00
dumping time (min)	0.50	0.50	0.50	0.50	0.50	0.50	0.50	0.50	0.50	0.50
total idle time (min)	5.00	5.00	5.00	5.00	5.00	5.00	5.00	5.00	5.00	5.00
total travel time (min)	4.47	5.44	6.38	7.63	8.04	9.06	10.48	11.60	12.76	13.95
total cycle time (min)	9.47	10.44	11.38	12.63	13.04	14.06	15.48	16.60	17.76	18.95

Year	1	2	3	4	5	6	7	8	9	10
air drag force on flats (n)	6655	6655	6655	6655	6655	6655	6655	6655	6655	6655
air drag force downhill (n)	6655	6655	6655	4890	4890	4890	4890	4890	4890	4890
air drag force uphill (n)	1222	1222	1222	1065	1065	1065	918	918	918	918
average rimpull on flats (n)	108034	108034	108034	108034	108034	108034	108034	108034	108034	108034
rimpull uphill (n)	398315	448651	476616	504422	565944	571537	576983	582576	588168	593761
energy required on flats (kwh)	54.0	54.0	54.0	54.0	54.0	54.0	54.0	54.0	54.0	54.0
energy required for uphill segment (kwh)	26.8	51.4	76.4	101.3	123.8	150.9	179.0	208.3	238.9	270.9
energy captured from downhill segment (kwh)	2.8	7.1	11.7	17.3	24.2	29.8	35.7	42.0	48.6	55.6
stored usable energy (kwh)	2.5	6.4	10.5	15.5	21.8	26.8	32.2	37.8	43.7	50.0
auxiliary energy (power steering, etc) (kwh)	17.5	19.3	21.1	23.4	24.1	26.0	28.6	30.7	32.9	35.1
total cycle energy (non hybrid) (kwh)	98.4	124.8	151.5	178.7	201.9	231.0	261.7	293.0	325.7	360.0
cycle fuel (non-hybrid) (l)	24.9	31.5	38.2	45.1	50.9	58.2	66.0	73.9	82.1	90.7
hybrid fuel savings	13.3%	15.5%	17.2%	18.7%	20.6%	21.3%	21.9%	22.4%	22.9%	23.3%
effective fuel savings	9.5%	11.9%	13.6%	15.2%	17.1%	17.9%	18.5%	19.1%	19.6%	20.0%
cycles per day	101	92	84	76	74	68	62	58	54	51
fuel saved per cycle (l)	2.37	3.74	5.19	6.84	8.72	10.42	12.22	14.09	16.07	18.16
fuel saved per year (l)	83900	120314	153252	182091	224815	249024	265225	285189	304010	321913
cost of fuel ($/l)	$1.30	$1.34	$1.38	$1.42	$1.46	$1.51	$1.55	$1.60	$1.65	$1.70
fuel savings per year ($)	109,071	161,101	211,360	258,669	328,941	375,293	411,700	455,971	500,645	546,031
NPV of savings ($) per truck for life = 7 years	373,507	643,137	907,432	1,168,233	1,389,049	1,598,566	1,801,809	2,008,871	2,212,876	2,414,077
NPV of savings ($) per truck for life = 10 years	1,188,778	1,500,173	1,816,856	2,126,192	2,431,095	2,708,882	2,982,281	3,261,782	3,543,506	3,828,871

Year	11	12	13	14	15	16	17	18	19	20
annual volume of ore mined (m^3)	8,305,085	8,305,085	8,305,085	8,305,085	8,305,085	8,305,085	8,305,085	8,305,085	8,305,085	8,305,085
cumulative volume of ore mined (m^3)	91,355,932	99,661,017	107,966,102	116,271,186	124,576,271	132,881,356	141,186,441	149,491,525	157,796,610	166,101,695
annual in-situ volume of waste mined (m^3)	13,952,527	13,952,527	13,952,527	13,952,527	13,952,527	13,952,527	13,952,527	13,952,527	13,952,527	13,952,527
cumulative in-situ volume of waste mined (m^3)	153,477,800	167,430,327	181,382,855	195,335,382	209,287,909	223,240,436	237,192,964	251,145,491	265,098,018	279,050,545

Year	11	12	13	14	15	16	17	18	19	20
cumulative in-situ volume mined (m^3)	244,833,732	267,091,344	289,348,956	311,606,568	333,864,180	356,121,792	378,379,404	400,637,016	422,894,628	445,152,240
pit depth at end of year (m)	149.6	167.6	186.8	207.6	230.1	255.0	282.8	314.6	352.4	400.0
average pit road grade (%)	8.2%	8.3%	8.3%	8.4%	8.4%	8.5%	8.5%	8.6%	8.7%	8.8%
calculated road length on descent (km)	1.830	2.038	2.259	2.494	2.749	3.028	3.339	3.672	4.066	4.563
velocity on climb (kph)	12	12	12	12	12	12	12	12	12	12
velocity on descent (kph)	25	25	25	25	25	25	25	25	25	25
time to climb (min)	9.15	10.19	11.29	12.47	13.75	15.14	16.69	18.36	20.33	22.82
time to descend (min)	4.39	4.89	5.42	5.99	6.60	7.27	8.01	8.81	9.76	10.95
distance on flats between pit and dump (km)	0.9	0.9	0.9	0.9	0.9	0.9	0.9	0.9	0.9	0.9
average rolling resistance	2.5%	2.5%	2.5%	2.5%	2.5%	2.5%	2.5%	2.5%	2.5%	2.5%
velocity on flats (kph)	25	35	35	35	35	35	35	35	35	35
total time on flats - both ways (min)	4.32	3.09	3.09	3.09	3.09	3.09	3.09	3.09	3.09	3.09
total spotting time at loader and at dump (min)	1.50	1.50	1.50	1.50	1.50	1.50	1.50	1.50	1.50	1.50
queuing time at loader and dump (min)	1.00	1.00	1.00	1.00	1.00	1.00	1.00	1.00	1.00	1.00
loading time (min)	2.00	2.00	2.00	2.00	2.00	2.00	2.00	2.00	2.00	2.00
dumping time (min)	0.50	0.50	0.50	0.50	0.50	0.50	0.50	0.50	0.50	0.50
total idle time (min)	5.00	5.00	5.00	5.00	5.00	5.00	5.00	5.00	5.00	5.00
total travel time (min)	17.86	18.17	19.80	21.54	23.43	25.49	27.79	30.26	33.17	36.85
total cycle time (min)	22.86	23.17	24.80	26.54	28.43	30.49	32.79	35.26	38.17	41.85
air drag force on flats (n)	3396	6655	6655	6655	6655	6655	6655	6655	6655	6655
air drag force downhill (n)	3396	3396	3396	3396	3396	3396	3396	3396	3396	3396
air drag force uphill (n)	782	782	782	782	782	782	782	782	782	782
average rimpull on flats (n)	104774	108034	108034	108034	108034	108034	108034	108034	108034	108034
rimpull uphill (n)	599218	602015	604811	607608	610404	613201	615997	621590	627183	632776
energy required on flats (kwh)	52.4	54.0	54.0	54.0	54.0	54.0	54.0	54.0	54.0	54.0
energy required for uphill segment (kwh)	304.6	340.8	379.4	421.0	466.2	515.8	571.3	634.0	708.4	802.0
energy captured from downhill segment (kwh)	63.8	71.7	80.1	89.3	99.2	110.3	122.6	137.1	154.4	176.1
stored usable energy (kwh)	57.4	64.5	72.1	80.3	89.3	99.2	110.3	123.4	138.9	158.5
auxiliary energy (power steering, etc) (kwh)	42.3	42.9	45.9	49.1	52.6	56.4	60.7	65.2	70.6	77.4
total cycle energy (non hybrid) (kwh)	399.3	437.7	479.3	524.1	572.8	626.2	686.0	753.3	833.0	933.5
cycle fuel (non-hybrid) (l)	100.6	110.3	120.8	132.1	144.3	157.8	172.8	189.7	209.8	235.1

Year	11	12	13	14	15	16	17	18	19	20
hybrid fuel savings	23.7%	24.1%	24.3%	24.6%	24.8%	25.1%	25.3%	25.5%	25.8%	26.1%
effective fuel savings	20.5%	20.8%	21.1%	21.3%	21.6%	21.8%	22.0%	22.3%	22.6%	22.9%
cycles per day	42	41	39	36	34	31	29	27	25	23
fuel saved per cycle (l)	20.58	22.93	25.45	28.18	31.15	34.42	38.09	42.34	47.40	53.76
fuel saved per year (l)	302490	332510	344841	356666	368098	379249	390240	403528	417191	431624
cost of fuel ($/l)	$1.75	$1.80	$1.85	$1.91	$1.97	$2.03	$2.09	$2.15	$2.21	$2.28
fuel savings per year ($)	$528,477	$598,353	$639,159	$680,908	$723,815	$768,115	$814,087	$867,062	$923,311	$983,912
NPV of savings ($) per truck for life = 7 years	2,612,603	2,875,571	3,122,100	3,382,819						
NPV of savings ($) per truck for life = 10 years	4,119,632									

NPV for Purchasing and Operating Hybrid Electric Trucks to Carry Waste:

Year	1	2	3	4	5	6	7	8	9	10
cumulative volume of waste placed in dump (m^3)	20,928,791	41,857,582	62,786,373	83,715,164	104,643,955	125,572,745	146,501,536	167,430,327	188,359,118	209,287,909
cumulative area of waste dump (km^2)	10.00	10.00	10.00	10.00	10.00	10.00	10.00	10.00	10.00	10.00
distance of a square dump (km)	3.16	3.16	3.16	3.16	3.16	3.16	3.16	3.16	3.16	3.16
height of waste dump in use at end of year (m)	2.1	4.2	6.3	8.4	10.5	12.6	14.7	16.7	18.8	20.9
average dump road grade (%)	3.0%	3.3%	3.6%	3.9%	4.2%	4.5%	4.8%	5.1%	5.4%	5.7%
road length on descent in dump (km)	0.070	0.127	0.175	0.215	0.249	0.279	0.306	0.329	0.349	0.368
velocity on climb (kph)	15	15	15	15	15	15	15	15	15	15
velocity on descent (kph)	35	35	35	35	35	35	35	35	35	35
time to climb (min)	1.25	2.16	3.01	3.96	4.37	5.19	6.38	7.26	8.15	9.05
time to descend (min)	0.54	0.92	1.29	1.81	2.00	2.38	2.76	3.14	3.52	3.92
distance on flats between pit and dump (km)	4.06	4.06	4.06	4.06	4.06	4.06	4.06	4.06	4.06	4.06
average rolling resistance	2.5%	2.5%	2.5%	2.5%	2.5%	2.5%	2.5%	2.5%	2.5%	2.5%
velocity on flats (kph)	35	35	35	35	35	35	35	35	35	35

Year	1	2	3	4	5	6	7	8	9	10
total time on flats - both ways (min)	13.93	13.93	13.93	13.93	13.93	13.93	13.93	13.93	13.93	13.93
total spotting time at loader and at dump (min)	1.50	1.50	1.50	1.50	1.50	1.50	1.50	1.50	1.50	1.50
queuing time at loader and dump (min)	1.00	1.00	1.00	1.00	1.00	1.00	1.00	1.00	1.00	1.00
loading time (min)	2.00	2.00	2.00	2.00	2.00	2.00	2.00	2.00	2.00	2.00
dumping time (min)	0.50	0.50	0.50	0.50	0.50	0.50	0.50	0.50	0.50	0.50
total idle time (min)	5.00	5.00	5.00	5.00	5.00	5.00	5.00	5.00	5.00	5.00
total travel time (min)	15.71	17.01	18.22	19.70	20.30	21.50	23.06	24.32	25.60	26.90
total cycle time (min)	20.71	22.01	23.22	24.70	25.30	26.50	28.06	29.32	30.60	31.90
air drag force on flats (n)	6655	6655	6655	6655	6655	6655	6655	6655	6655	6655
air drag force downhill (n)	6655	6655	6655	6655	6655	6655	6655	6655	6655	6655
air drag force uphill (n)	1222	1222	1222	1222	1222	1222	1222	1222	1222	1222
average rimpull on flats (n)	108034	108034	108034	108034	108034	108034	108034	108034	108034	108034
rimpull uphill for waste dump (n)	308830	325608	342387	359165	375944	392723	409501	426280	443058	459837
energy required on flats (kwh)	243.8	243.8	243.8	243.8	243.8	243.8	243.8	243.8	243.8	243.8
energy required for all uphill segments (kwh)	32.8	62.9	93.0	122.7	149.9	181.4	213.8	247.2	281.9	317.9
energy captured from downhill segment (kwh)	2.9	7.5	12.6	18.8	26.5	32.9	39.6	46.8	54.4	62.4
stored usable energy (kwh)	2.6	6.8	11.4	16.9	23.8	29.6	35.7	42.1	48.9	56.1
auxiliary energy (power steering, etc) (kwh)	38.3	40.7	43.0	45.7	46.8	49.0	51.9	54.2	56.6	59.0
total cycle energy (non hybrid) (kwh)	315.0	347.4	379.8	412.2	440.5	474.2	509.5	545.3	582.3	620.7
cycle fuel (non-hybrid) (l)	79.4	87.6	95.7	103.9	111.0	119.5	128.4	137.4	146.7	156.4
hybrid fuel savings	11.7%	12.7%	13.7%	14.6%	15.8%	16.5%	17.2%	17.8%	18.5%	19.0%
effective fuel savings	7.9%	9.0%	9.9%	10.9%	12.2%	12.9%	13.6%	14.3%	14.9%	15.5%
cycles per day	46	44	41	39	38	36	34	33	31	30
fuel saved per cycle (l)	6.29	7.84	9.50	11.38	13.49	15.45	17.50	19.65	21.90	24.28
fuel saved per year (l)	102046	119722	137439	154750	179178	195833	209547	225150	240533	255747
cost of fuel ($/l)	$1.30	$1.34	$1.38	$1.42	$1.46	$1.51	$1.55	$1.60	$1.65	$1.70
fuel savings per year ($)	132,659	160,308	189,552	219,829	262,166	295,132	325,272	359,978	396,111	433,799
NPV of savings ($) per truck for life = 7 years	192,581	366,178	546,780	734,251	917,569	1,094,182	1,273,856	1,459,394	1,648,834	1,842,228
NPV of savings ($) per truck for life = 10 years	838,071	1,063,811	1,296,315	1,535,167	1,779,586	2,019,691	2,265,534	2,519,136	2,781,667	3,054,349

Year	11	12	13	14	15	16	17	18	19	20
cumulative volume of waste placed in dump (m^3)	230,216,700	251,145,491	272,074,282	293,003,073	313,931,864	334,860,655	355,789,445	376,718,236	397,647,027	418,575,818
cumulative area of waste dump (km^2)	10.00	10.00	10.00	10.00	10.00	10.00	10.00	10.00	10.00	10.00
distance of a square dump (km)	3.16	3.16	3.16	3.16	3.16	3.16	3.16	3.16	3.16	3.16
height of waste dump in use at end of year (m)	23.0	25.1	27.2	29.3	31.4	33.5	35.6	37.7	39.8	41.9
average dump road grade (%)	6.0%	6.3%	6.6%	6.9%	7.2%	7.5%	7.8%	8.1%	8.4%	8.7%
road length on descent in dump (km)	0.384	0.399	0.413	0.426	0.437	0.448	0.458	0.467	0.475	0.483
velocity on climb (kph)	14	14	14	13	13	13	12	12	12	12
velocity on descent (kph)	30	30	30	30	30	30	25	25	25	25
time to climb (min)	10.80	11.90	13.06	14.44	15.76	17.21	18.98	20.69	22.70	25.23
time to descend (min)	5.16	5.69	6.25	6.84	7.47	8.16	9.11	9.93	10.90	12.11
distance on flats between pit and dump (km)	4.06	4.06	4.06	4.06	4.06	4.06	4.06	4.06	4.06	4.06
average rolling resistance	2.5%	2.5%	2.5%	2.5%	2.5%	2.5%	2.5%	2.5%	2.5%	2.5%
velocity on flats (kph)	35	35	35	35	35	35	35	35	35	35
total time on flats - both ways (min)	13.93	13.93	13.93	13.93	13.93	13.93	13.93	13.93	13.93	13.93
total spotting time at loader and at dump (min)	1.50	1.50	1.50	1.50	1.50	1.50	1.50	1.50	1.50	1.50
queuing time at loader and dump (min)	1.00	1.00	1.00	1.00	1.00	1.00	1.00	1.00	1.00	1.00
loading time (min)	2.00	2.00	2.00	2.00	2.00	2.00	2.00	2.00	2.00	2.00
dumping time (min)	0.50	0.50	0.50	0.50	0.50	0.50	0.50	0.50	0.50	0.50
total idle time (min)	5.00	5.00	5.00	5.00	5.00	5.00	5.00	5.00	5.00	5.00
total travel time (min)	29.89	31.52	33.24	35.20	37.16	39.30	42.02	44.55	47.53	51.27
total cycle time (min)	34.89	36.52	38.24	40.20	42.16	44.30	47.02	49.55	52.53	56.27
air drag force on flats (n)	6655	6655	6655	6655	6655	6655	6655	6655	6655	6655
air drag force downhill (n)	4890	4890	4890	4890	4890	4890	3396	3396	3396	3396
air drag force uphill (n)	1065	1065	1065	918	918	918	782	782	782	782
average rimpull on flats (n)	108034	108034	108034	108034	108034	108034	108034	108034	108034	108034
rimpull uphill for waste dump (n)	476458	493237	510015	526647	543426	560204	576847	593626	610404	627183
energy required on flats (kwh)	243.8	243.8	243.8	243.8	243.8	243.8	243.8	243.8	243.8	243.8

Year	11	12	13	14	15	16	17	18	19	20
energy required for all uphill segments (kwh)	355.5	395.5	438.0	483.3	532.2	585.5	644.6	711.0	788.9	886.2
energy captured from downhill segment (kwh)	71.7	80.7	90.2	100.5	111.6	123.7	137.4	153.1	171.5	194.4
stored usable energy (kwh)	64.6	72.6	81.2	90.4	100.4	111.4	123.7	137.8	154.4	175.0
auxiliary energy (power steering, etc) (kwh)	64.5	67.6	70.7	74.4	78.0	82.0	87.0	91.7	97.2	104.1
total cycle energy (non hybrid) (kwh)	663.8	706.9	752.5	801.5	854.0	911.3	975.4	1046.4	1129.9	1234.1
cycle fuel (non-hybrid) (l)	167.3	178.1	189.6	201.9	215.1	229.6	245.7	263.6	284.6	310.8
hybrid fuel savings	19.6%	20.1%	20.6%	21.0%	21.4%	21.8%	22.2%	22.7%	23.1%	23.6%
effective fuel savings	16.2%	16.7%	17.1%	17.6%	18.0%	18.5%	18.9%	19.3%	19.8%	20.3%
cycles per day	28	26	25	24	23	22	20	19	18	17
fuel saved per cycle (l)	27.02	29.67	32.50	35.53	38.80	42.39	46.41	50.98	56.35	63.03
fuel saved per year (l)	260248	273013	285562	296950	309223	321485	331630	345668	360404	376362
cost of fuel ($/l)	$1.75	$1.80	$1.85	$1.91	$1.97	$2.03	$2.09	$2.15	$2.21	$2.28
fuel savings per year ($)	454,677	491,288	529,286	566,905	608,046	651,122	691,820	742,738	797,632	857,938
NPV of savings ($) per truck for life = 5 years	2,036,815	2,255,855	2,487,803	2,735,544						
NPV of savings ($) per truck for life = 10 years	3,339,087									