Reference Model Based Power Smoothing for Stand-alone Hybrid PV-Diesel Micro Grid

by

Yize Xu

A THESIS SUBMITTED IN PARTIAL FULFILLMENT OF

THE REQUIREMENTS FOR THE DEGREE OF

MASTER OF APPLIED SCIENCE

in

The Faculty of Graduate and Postdoctoral Studies

(Electrical and Computer Engineering)

THE UNIVERSITY OF BRITISH COLUMBIA

(Vancouver)

December 2013

Abstract

Photovoltaic (PV) Generator generates clean energy but also brings active power fluctuation to the network. The thesis investigates the frequency stability issue of a MW level stand-alone hybrid micro grid which contains PV generator, diesel generator, storage unit and loads. The PV generator can only generate as much power as the sun provides. The resulting power mismatch between PV generation and load demand needs to be compensated. The slow responding diesel generator is designed to compensate for the steady state power mismatch. The battery, as the fast responding storage unit, is set to reject the power transients.

A battery control method based on the micro grid frequency feedback and PV output feed-forward is presented to satisfy the requirement of active power compensation in transients. It will be shown that the method keeps the stand - alone micro grid frequency within a specified region and provides the diesel generators more margin of time to adjust their output for better diesel efficiency.

Preface

This thesis is original, unpublished, independent work by the author, Yize Xu.

Table of Contents

List of Tables

List of Figures

Acknowledgements

I offer my enduring gratitude to my academic supervisor Dr. W G Dunford and Dr. Djordje Garabandic.

Thanks to Schneider Electric, by which company the research was partially funded as a branch of the SE Battery Storage Project.

1. Introduction

Figure 1 - Stand- alone hybrid micro grid

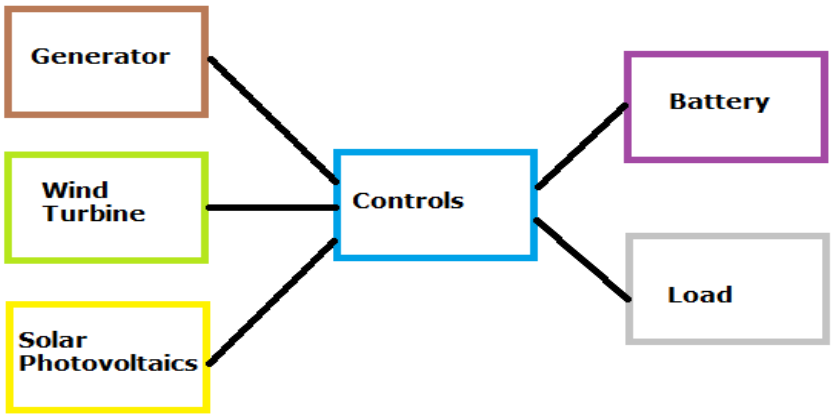

In remote areas where users have no access to the utility grid, people usually build small stand-alone micro grid powered by diesel generators [1]. As renewable technologies, such as solar, wind and tidal power generation, are catching more people's attention these days for they are environmental friendly and abundant in nature, the idea of integrating renewable generation units such as PV generators into the traditional diesel powered stand-alone micro grid becomes attractive[2][3]. Additionally, the energy storage system is introduced to offer higher power quality and stability in power fluctuations occurred in supply and loading [4]. The stand- alone hybrid micro grid is defined as an electrical system that includes multiple loads and various types of distributed energy resources that can be operated as an electrical island [5], just as shown in Figure 1.

In order to keep the system frequency within the region specified by the electric code, stand-alone hybrid micro grids have to be able to manage active power disturbances in the system quickly and accurately, since the frequency depends on the demand and supply relationship of active power. The power mismatch between the nondeterministic PV generation and the variable load demand needs to be compensated.

The slow responding diesel generator is designed to compensate for the steady state power mismatch. Usually there are multiple diesel generators sharing loads in the micro grid, and the diesel efficiency varies with the generator loading [6]. In order to maximize the diesel efficiency, it is desirable to run a number of generators in full power, and to turn off the remaining ones under low demand condition. However, the offline diesel generators take a long period of time to resynchronize and reach their full power. This time delay makes it impossible to comply with an immediate power request, which leads to severe active power deficiency in the micro grid.

The battery, as the fast responding storage unit, is set to offset the PV transients, load fluctuation and provides extra active power during diesel generator resynchronizing actions. As will be shown, with properly controlled battery storage, not only can the micro grid frequency be maintained within the specified range, but also the diesel generators could gain time margin for optimal operating point adjustment. Therefore, a reliable and effective battery storage controller design plays an important role in the design of the whole stand-alone micro grid.

The goal of the thesis is to investigate various control method for the battery energy storage system so as to find alternatives for designing an optimal battery control method that serves the islanded hybrid micro grid better. The study will focus on the battery's impact on reducing active power disturbance within the micro grid. The system frequency deviation is applied as the criterion to judge the active power stability.

In order to demonstrate the effectiveness of the proposed battery control method, the micro grid comprised of diesel generators, PV generators, battery energy storage system and loads will be modeled in Digsilent PowerFactory software [7]. The simulation will test the battery's contribution to reducing frequency excursion under various types of active power fluctuations. Parallel comparisons among different control methods will prove the proposed method that based on frequency feedback and PV output feedforward has optimal performance. Additionally, a short discussion on how to choose the battery capacity will be presented

2. Background and literature review

This chapter will first provide background information about the major components of the micro grid along with their problems. Then it will be demonstrated why the battery storage is a must in order to maintain the system stability. Subsequently, a literature review on current battery control schemes will be conducted.

2.1. Background: Summary of the stand-alone hybrid micro grid

Figure 2 - Simplified stand-alone hybrid micro grid

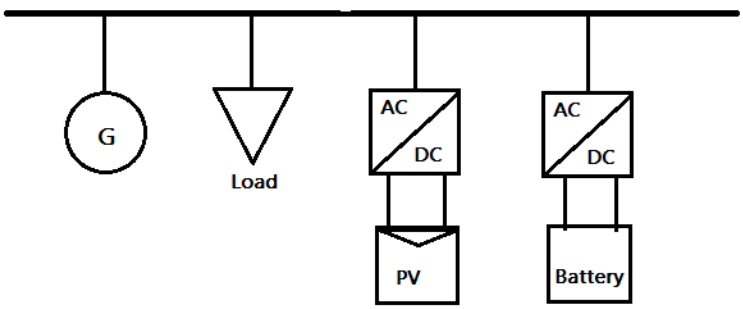

Figure 2 shows a simplified stand-alone micro grid configuration. The system is disconnected from the utility grid. It consists of a diesel generator set, PV generator, battery and load. The detailed specifications of the components will be provided in the next chapter. Now the focus is on understanding the properties of these units in general.

The Photovoltaic system:

Figure 3 - 24Hr PV output profile

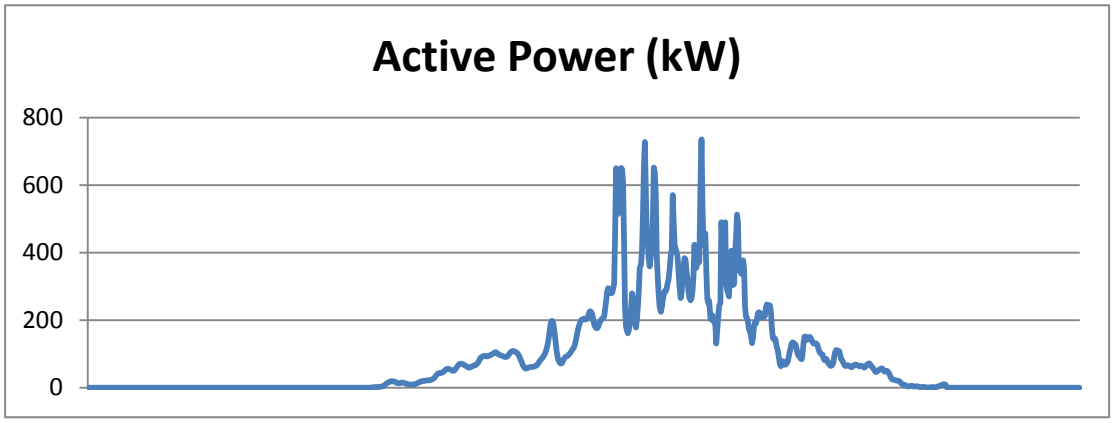

The existence of the photovoltaic system is a source of power variations which is due to the non-deterministic nature of solar irradiance. During partially cloudy days, the power curve has numerous jagged edges and spikes (Figure 3). This phenomenon additionally puts stress on how to maintain the power balance of the power system.

The Diesel generator:

Conventionally, stand-alone micro grids are powered by diesel generators. The rotor of the diesel generator not only functions as the driving unit for power generation, but the rotor itself is also a natural flywheel that delivers its stored kinetic energy to the grid in the form of electrical power at the instant of active power shortage and absorbs extra power when power generation exceeds consumption. Although generators do adjust the output power to compensate for load changes (through governor or frequency control), the responding time of these control loops ranges from seconds to minutes. This responding speed is generally slow. Transient power fluctuations are initially compensated by transferring the rotor kinetic energy to the micro grid in the form of electric power. After introducing PV generator as an additional power source, the diesel generator set should keep the active power contribution low since the fuel cost need to be minimized. However, reducing the number of diesel generators online makes the micro grid deficient in rotor

energy reserve and the frequency susceptible to frequency excursions in the case of active power fluctuation [8].

Figure 4 - Typical fuel efficiency (kWh/liter) vs. output power based on [9]

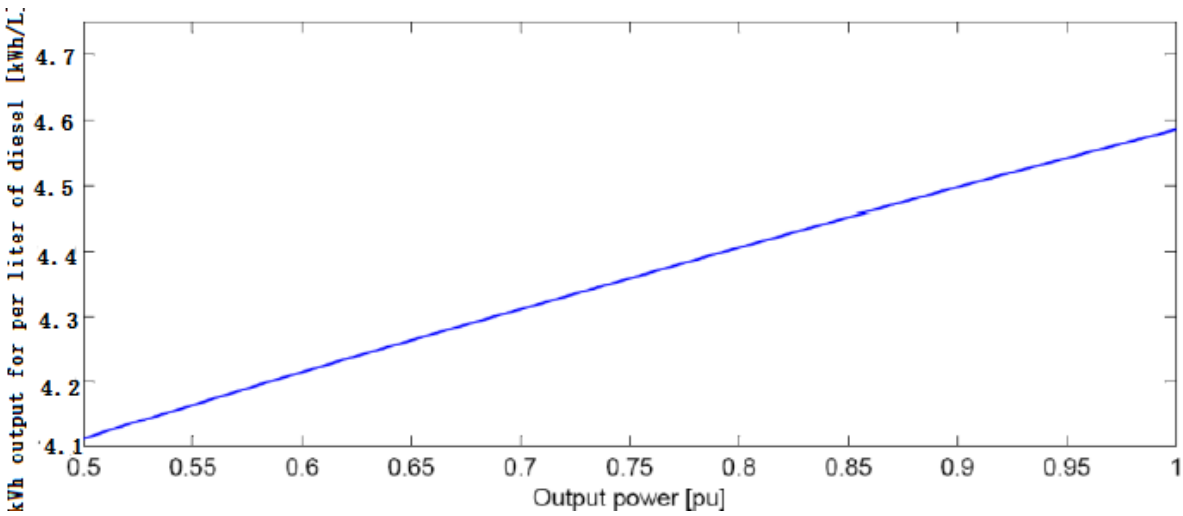

An additional factor deteriorating the active power balance comes from the diesel generator itself. Figure 4 shows the typical relationship between the amount of electricity generated by per liter diesel and the operating point of the diesel generator. It is clear that higher output power brings higher generator efficiency, so it is more desirable to have less generators operating at high MW output than more generators operating at low MW output when we have multiple diesel generators for dispatch. Therefore, redundant diesel generators are required to be turned off at low demand and back online at high demand to achieve better efficiency and longer diesel lifetime [10]. The switching action brings an additional problem to the micro grid. Rebooting and resynchronizing the diesel generator that had been shut down sometimes take as long as 5 – 10 seconds, so the micro grid frequency would drop drastically under high PV penetration level if no additional energy storage can supply the loads before the generator come back online.

The Load:

Frequency independent constant MW load is assumed. Step changes will be applied to simulate sudden load variations.

The Battery:

As being mentioned, Introducing PV into the existing network weakens the micro grid. With the aid of properly controlled battery energy storage system, high PV penetration level can be achieved without compromising micro grid active power stability. Since the diesel generators resolve the steady state power mismatch problem between generation and consumption, the role of the battery is designed only to respond to power transients. The transients specifically refer to the active power disturbances caused by PV flicker, generator switching, and load variation.

2.2. Challenges: Active power fluctuation and frequency stability

Almost every component in the hybrid micro grid can become the source of active power fluctuation. This section explains how the micro grid frequency varies with active power fluctuation and why additional energy storage is required to regulate the system frequency.

The micro grid frequency is established by the rotational speed of the rotor of the diesel generator. Equation 1 [11] describes the rate of change of the rotor speed is proportional to the power mismatch between the input and the output of the generator.

$$P_{in} - P_{out} = J\omega \frac{d\omega}{dt} \approx J\omega_s \frac{d\omega}{dt} \qquad (1)$$

Where P_{in} is the mechanical power supplied to the generator shaft; P_{out} is the electrical power delivered to the micro grid; ω_s is the nominal angular speed; ω is the rotor angular speed. J is the inertia constant of the generator.

P_{in} equals to P_{out} in steady state. P_{out} changes at the instant of active power fluctuation, while P_{in} that regulated by the diesel governor remains unchanged. The power mismatch between input and output accelerates/ decelerates the rotor, and the rate depends on the value of $J\omega_s$ given a fixed Δ P. Inertia constant J is the total moment of inertia of the rotor mass in $Kg{\cdot}m^2$. J is cumulative for multiple generators. Consequently, more and larger rotors provide higher J value, which leads to a

lower $\frac{d\omega}{dt}$ value for a fixed Δ P. Vice versa, the frequency becomes unstable in disturbances while the number of diesel generators is reduced in the micro grid.

Since only one fundamental frequency could exist in the micro grid, the frequency of the PV inverter current is controlled by the phase lock loop (PLL) such that the output frequency always follows the micro grid frequency. Unlike the diesel generator, solid state PV inverters controlled with conventional PLL have no ability to establish their own frequency, consequently it cannot provide inertia.

It is desirable to observe the frequency fluctuation under active power disturbance, because the varying frequency is an indication of the power imbalance. The frequency measurement feeds back to the governor controller of the diesel generator in order to provide reference to adjust the driving torque that matches the loading. However, the frequency excursion must be regulated within specified range.

The system frequency limit is imposed by the frequency tolerance of the load and the diesel generator together. Normally, as long as the daily average frequency of good accuracy is maintained, small scale power micro grid needs not to regulate the frequency as accurate as the utility grid, since typical loads are not sensitive to small changes in frequency [12]. Nevertheless, even rough regulation of the frequency is not easy in the diesel-PV hybrid micro grid of high PV penetration level.

Assume there is a micro grid comprising of the components that specified in Table 5 of section 4.4. The PV generator output changes from 2MW to zero abruptly due to the sun being blocked by clouds. The rate of frequency drop at the moment of the event is given in Equation 2.

$$\frac{d\omega}{dt} = \frac{\Delta P}{J\omega_s} \qquad (2)$$

Provided that J=20Kgm^2 x2 (according to MJH 400 LB4 SYM GEN datasheet in Appendix A) and ω_s=377rad/s, the rate of change of frequency is 0.021Hz/ms, that is, the frequency reduces by 1Hz every 50ms. It only takes 150ms to trigger the frequency protection if the threshold is set to 57Hz.

The high rate is unlikely to be observed in the conventional stand-alone power micro grid, as the inertia is lower and the disturbance is higher in this PV-Diesel hybrid micro grid. (The contribution of the generator governor is not considered in this calculation, since it is too slow to respond to power transients in millisecond.)

Therefore, additional storage for frequency regulation is a must in order to maintain the system stability.

2.3. Solutions: Review of battery storage control schemes

Three major types of battery inverter control method will be reviewed in this section, and each will be evaluated in terms of the ability of power compensation in transients. This information will further become the reference for designing the control scheme of our own.

2.3.1. Frequency droop control

Figure 5 - An example of Frequency droop with deadband

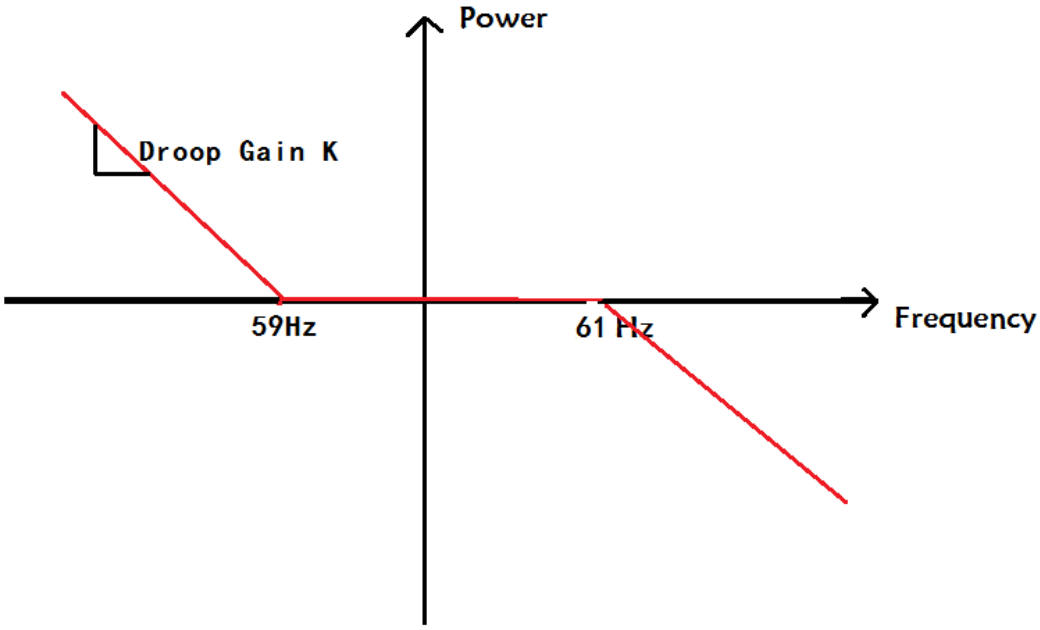

Since the net frequency deviation indicates the mismatch of generation and demand, the droop control regulates the battery to absorb/deliver active power proportional to the micro grid frequency excursion [13]. The output of the battery is

$$\mathrm{P}_{battery} = \mathrm{K} \cdot \Delta\mathrm{frequency} \tag{3}$$

Where K is the droop gain.

The deadband designed around the nominal frequency decreases the controller's sensitivity to small frequency changes, thereby reducing the usage of the battery in minor disturbances. In steady state, frequency is also hard to regulate precisely at the nominal frequency (60Hz in our case) in small scale micro grid, so the deadband prevents the battery from being depleted under constant frequency error.

Frequency droop is useful for the battery to automatically adjust its output according to the power imbalance. The battery output always counteracts the frequency excursion until a new steady state frequency point is reached. However, the problem arises when significant power disturbance appears. The droop control allows the frequency to settle at a new point that outside the deadband [14]. In that case, the battery has to keep delivering power continuously as a steady state power source, which departs from the original plan to control the battery only as a transient compensator. Furthermore, frequency droop is not very responsive to transients. It cannot provide enough power according to the severity of the contingency at the first moment. The battery output gradually rises as the frequency slides down, which makes it less capable for quick compensation.

2.3.2. Frequency derivative control

The derivative method controls the battery to absorb/deliver active power inversely proportional to the derivative of the rotor frequency.

$$P_{battery} = -K_d \frac{d\omega}{dt} \tag{4}$$

Where Kd is the derivative gain; ω is the rotor speed; $P_{battery}$ is the battery's output power.

By assigning $Kd=J\omega$ and $P_{battery}=P_{out}-P_{in}$, equation 4 becomes identical to equation 1, which suggests the battery output is regulated in a way that it absorbs/provides electrical power in the same pattern as the rotating mass of a real generator with virtual inertia constant J.

Compared with frequency droop control, this method predicts the power imbalance by detecting the rate of change and provides no power in the steady state. It delivers the battery power proportional to the significance of the disturbance instantaneously, thereby achieving more effective transient compensation.

However, this method also has its limitation. Figure 6 shows how the variation of parameter Kd influences frequency stability.

Figure 6 - Grid frequency disturbance for different Kd (shown as Kvi in the referred figure) values [15] (permission granted for republication)

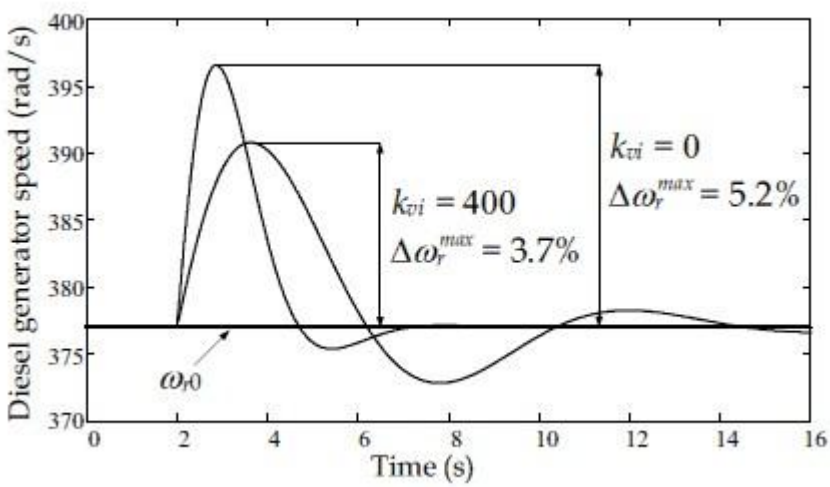

Above control experiment records the frequency deviation for different Kd values under the same active power disturbance. It is a tradeoff that increasing Kd reduces the maximum frequency excursion, but prolongs the time taken to reach the steady state. Excessively high value of Kd would cause system oscillation.

2.3.3. Virtual synchronous generator (VSG) control

Dynamic frequency variation indicates the power imbalance within the micro grid, and it is hence used by the controllers as the reference signal to adjust the output of the generation units. The ability to establish this dynamic frequency is essential for a micro grid to keep its equilibrium of the active power generation and demand. The diesel generator has the inherent ability to establish this dynamic frequency with a rotor of varying speed.

The output frequency of the battery inverter current is usually controlled by the phase lock loop (PLL) such that the output frequency always follows the grid frequency, so an unified frequency is maintained in the micro grid. However, unlike the synchronous machine, solid state inverters controlled with the PLL have no ability to establish their own frequency.

The battery inverter's ability to establish the dynamic frequency is a must when the diesel generators are shut off due to protective tripping and no grid connection is available. Without this ability, the PLL of the battery inverter and the PV generator inverter would have no external frequency to track to in the absence of diesel generator, and the whole micro grid could collapse as a result.

To solve the problem, some papers [15][16][17][18] have proposed several battery inverter control topologies to emulate the frequency characteristics and inertia behavior of the real generator, as a result, the storage could establish its own frequency and also counteract the power fluctuation using its reserved power, just like a large flywheel. Figure 7 shows the concept of this control method.

Figure 7 - Virtual synchronous generator control concept [19] (permission granted for republication)

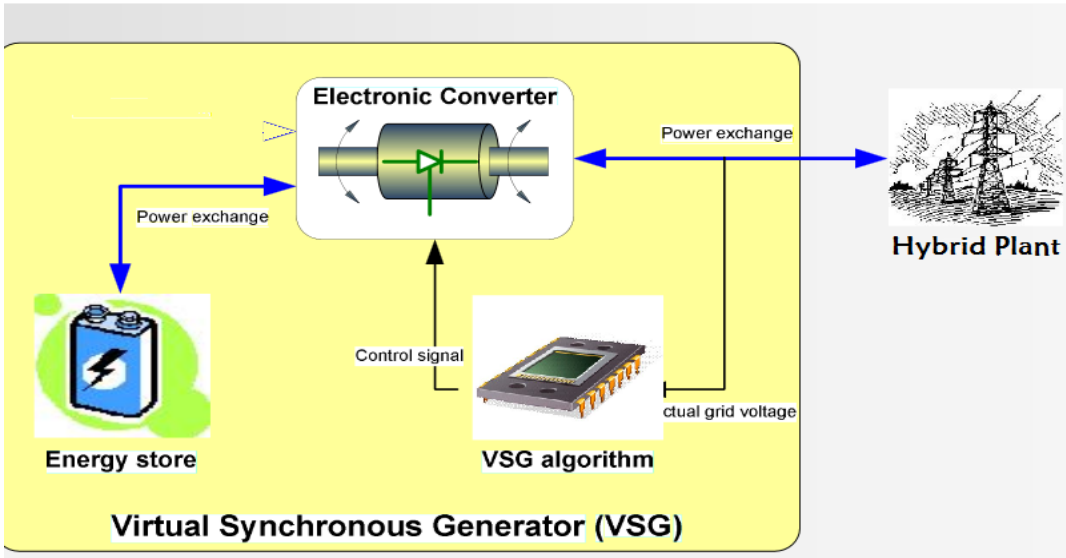

This method controls the battery inverter such that the battery behaves like one large rotating mass, which is called virtual synchronous generator (VSG) control. This section will review some of those methods.

Example 1:

This approach emulates a cylindrical rotor type synchronous machine. The scheme is shown below.

Figure 8 - Virtual synchronous generator example 1[16] (permission granted for republication)

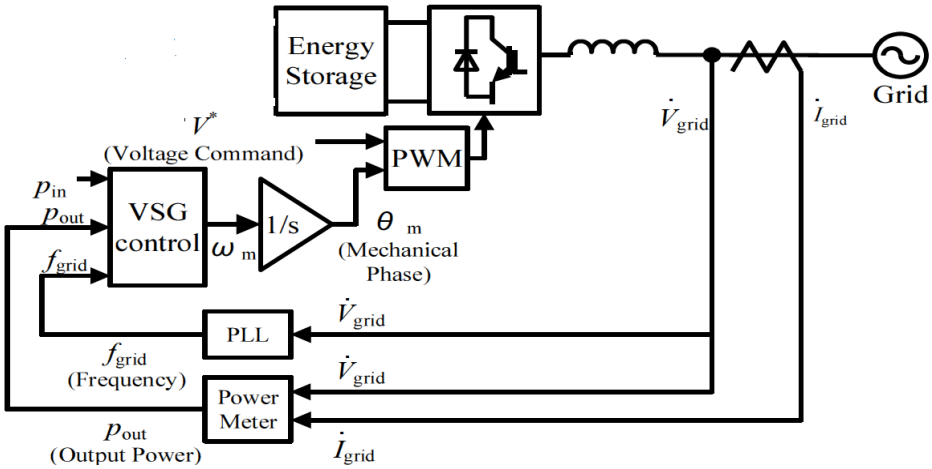

As proposed in [16], the energy storage is connected to the micro grid through the battery inverter. The controlled battery inverter generates a sinusoidal voltage just like the rotor EMF of the real synchronous machine.

Neglecting the control paths in Figure 8, the circuit composition is very similar to the simplified generator circuit in Figure 9.

Figure 9 - Simplified synchronous machine model

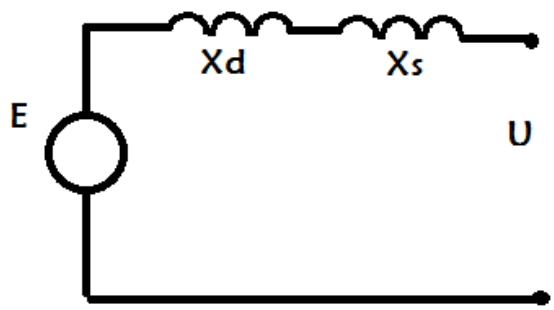

In the above model, E is the rotor EMF vector, the angle of which depends on what reference frame is chosen. U is the generator terminal voltage vector. Xd and Xs are the rotor damping reactance and the stator reactance between the generator input and output [20]. The active power being delivered is formularized as

$$P_{out} = \frac{\mathrm{E}\times\mathrm{U}}{X_{tot}} sin\delta \qquad (5)$$

Where δ is the relative angle between E and U.

The output of a real generator depends on the relative angle and the rotor EMF (E). In the VSG scheme, Vgrid is comparable to the terminal voltage U; Xd+Xs is comparable to the inductor between the inverter and the grid terminal. As long as we can emulate an E characteristic like the real rotor, the circuit could duplicate the dynamics of a real synchronous generator.

To keep it simple, the magnitude of E is assumed to be constant. It is the relative angle that determines the actual output of the system, which means that emulating the virtual rotor's rotational speed variation is our first concern. It is achieved by the inverter control circuit.

Equation 1 has already described how rotor speed changes with the change of input and output active power. This equation is programed into the VSG block, whose output is the virtual rotor speed. The speed is then integrated to generate the virtual rotor phase position that controls the inverter PWM. As a result, the inverter output E will have the dynamics just like the rotor EMF.

Pin in this case is comparable to the prime mover of the synchronous generator. It could be programed with a governor control just like a real synchronous generator.

Figure 10 - Governor used in paper [16] (permission granted for republication)

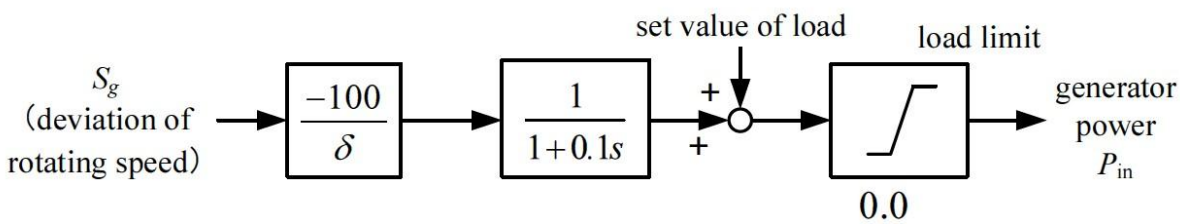

In paper [16] the governor adjusts P_{in} based on the integrated frequency error. P_{in} could equal to zero, representing a flywheel running with no load. However, it will still respond to transient frequency disturbances. If we choose not to use this virtual generator taking up loads in steady state, but only respond to transients, the battery size can be relatively small.

The idea of this model is to 'physically' build up a simplified synchronous generator by emulating the rotor dynamics only. There is another VSG model proposed in [17] where the complete generator is modeled mathematically. The model in [16] only considers the active power dynamics, but the model in [17] also considers the reactive power dynamics of the virtual generator. In [16] the inverter is controlled in voltage source mode and the virtual generator itself has the ability to establish its own frequency. The scheme could operate the battery system like a real generator (P_{in}>0) or an inertia provider (P_{in}=0).

Example 2:

This type of arrangement still emulates the round rotor type machine, but with a different approach inspired by phase lock loop (PLL) architecture.

Figure 11 - Generic PLL block diagram [21] (permission granted for republication)

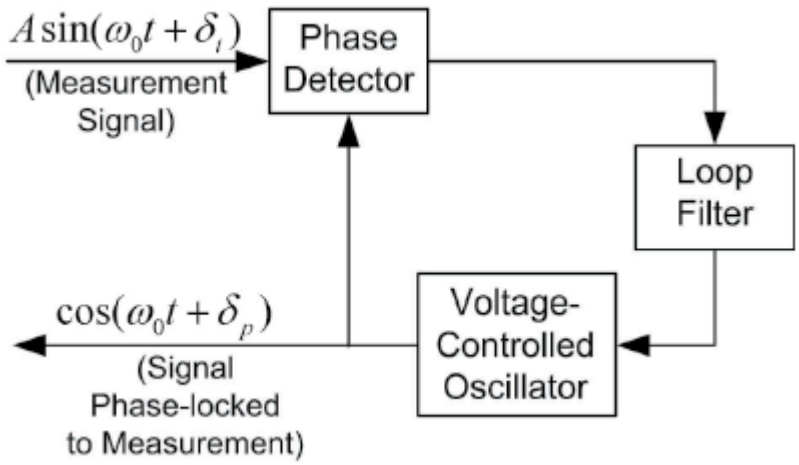

PLL is often used to synchronize the inverter output frequency and phase with the gird. As shown in Figure 11, it measures the sine grid voltage (or current) and compares it with the cosine function generated from the oscillator. The phase difference goes in to the loop filter, which could be a proportional gain, an integral or a derivative depending on the application, and then feedbacks to the VCO. The resulting output always follows the phase of the input measurement signal with an adjustable delay. [21]

The PLL is usually used by the inverters to lock its output frequency to the grid frequency. Therefore the distributed generators connected by PLL controlled inverters are not able to provide any inertia. However, this inherent PLL delay can be used to emulate the rotor dynamic when special values are assigned to the PLL loop.

Referring to the PLL block diagram in Figure 11, set the phase detector gain

$$K_d = \frac{E}{X_{tot}} \tag{6}$$

where E is rotor EMF, Xtot is the internal equivalent reactance.

Set the loop filter to be an integrator Ki/s, where

$$K_i = \frac{\omega_s}{J\omega^2} \approx \frac{1}{J\omega_s} \tag{7}$$

ω is the rotor EMF angular speed and ω_s is the generator terminal voltage frequency for a real generator. Accordingly, ω is the converter side speed and ω_s is the grid side frequency for a virtual generator. [18] The above approximation holds for small angular speed deviation.

Finally set the VCO to be an integrator 1/s.

By assigning these special values to the PLL in Figure 11, it now becomes the controller shown in the dotted line box of Figure 12.

Figure 12 - Linearized PLL block representing a generator

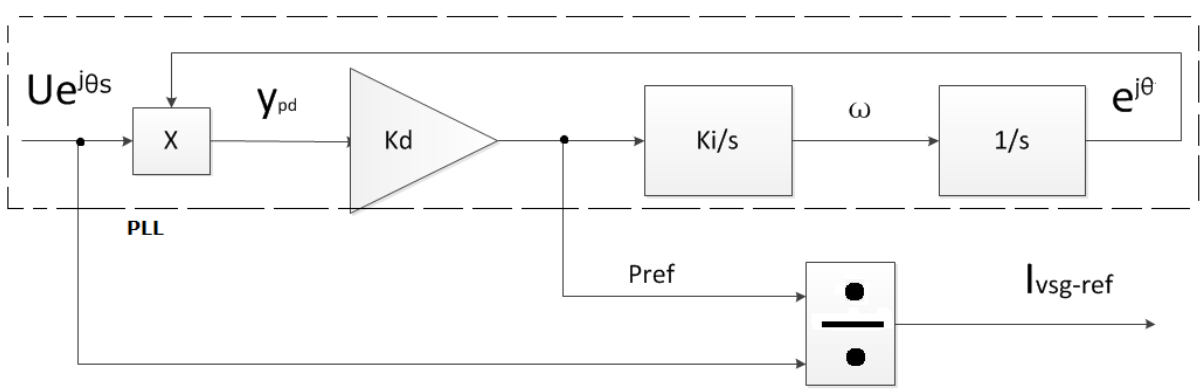

With above specifications the PLL now could represent a synchronous generator model. It can be validated by a set of equations [18].

$$y_{pd} = Im\{Ue^{j\theta s}e^{-j\theta}\} = Usin\delta \tag{8}$$

Based on equation 6, 7, and 8, it can be derived that

$$\frac{d\omega}{dt} = K_i \cdot K_d \cdot y_{pd} = \frac{EU}{x_{tot}} \sin\delta \cdot \frac{1}{J\omega s} \tag{9}$$

On the other hand, set P_{in}=0 in equation 1 and combine it with equation 5, we have

$$J\omega_s \frac{d\omega}{dt} = \frac{EgUs}{x_{tot}} \sin\delta = -P_{out} \tag{10}$$

Equation 9 describes the dynamics of the PLL, and Equation 10 is the dynamics of the real generator. By comparing equation 9 and 10, it is evident that The dynamics of PLL therefore coincides with the dynamics of a real SG without driving torque (P_{in}=0). The control turns the battery storage system into a virtual synchronous generator without steady state output.

The inverter output power is defined as

$$P_{ref} = K_i \cdot K_d = \frac{EU}{x_{tot}} \sin \delta \tag{9}$$

The result is identical to equation 5. The equation indicates the power-angle characteristic of the real generator is interpreted by the PLL loop. The control signal to the inverter contains two parts. The magnitude of the current $I_{vsg\text{-}ref}$ determines the active power output of the battery system; the phase signal θ provides a phase reference to the inverter control.

In reference [18] the inverter is controlled in current source mode. Just like example 1, the control regulates the battery system to become an inertia provider by emulating the rotor dynamics and it has the ability to establish its own frequency.

2.3.4. Comparison among above schemes

All above schemes could achieve the goal to counteract active power disturbances in the micro grid. The frequency droop control is not as responsive and accurate in power transients as the frequency derivative control. The frequency derivative method reacts instantaneously to disturbances but causes frequency oscillation. The VSG method controls the battery inverter such that the dynamics of the battery coincides with one large rotating mass.

The VSG method performs better than the frequency derivative method because the VSG method increases the kinetic energy reserve (or inertia) by emulating the dynamics of rotating mass, while the frequency derivative does not. With a higher inertia provided by VSG, the frequency oscillation that occurs in the frequency derivative method is eliminated.

3. Reference model based VSG topology for the proposed hybrid micro grid

All the battery control schemes presented in section 2.3 can be classified as feedback controls that are based on system frequency measurements (except VSG example 1).

Figure 13 - Frequency feedback control

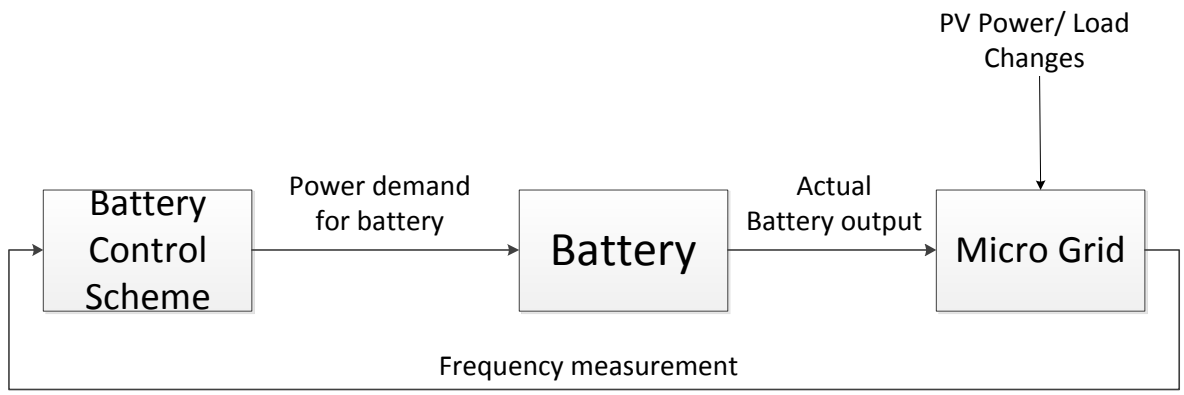

Figure 13 shows that the frequency feedback is a process in which the measured frequency about the past is applied as a reference for the battery controller to generate the battery's power demand signal that controls the battery to stabilize the system frequency in the present.

Frequency feedbacks are effective against disturbances in general, but still imperfect in the context of the PV-diesel micro grid. First, such frequency measurements do not always serve as an indicator of "regional" active power imbalance when the hybrid micro grid is connected to the utility grid through the point of common coupling. Second, the power balance can be maintained at grid level with the aid of the battery, yet the battery can't help to smooth the highly jagged PV power curve because derivative compensation is retroactive to the existing grid frequency disturbance, which means a deteriorating power quality due to frequent PV voltage variations and flicker.

The above problems can be solved by the proposed control scheme shown in Figure 14, which is a feedforward control scheme based on active power measurement of the PV generator.

Figure 14 - Feedforwad control of PV generated active power

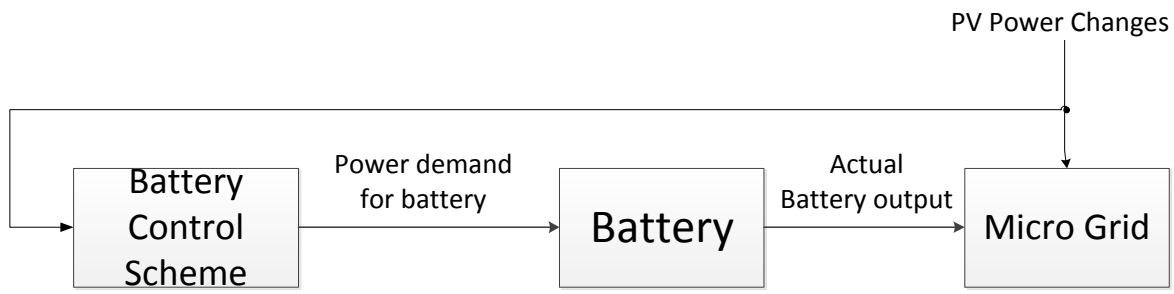

This feedforward control gives a control impact to the battery from which we are expecting a pre-defined output that counteracts the PV active power change. It is given before the power change causing any frequency change. Rather than measuring the grid frequency, this control method locally monitors the PV active power output and responds to its change in a targeted manner.

The detail of the 'Battery Control Scheme' of Figure 14 is shown in Figure 15.

Figure 15 - 'Battery Control Scheme' block from the feedforward control diagram

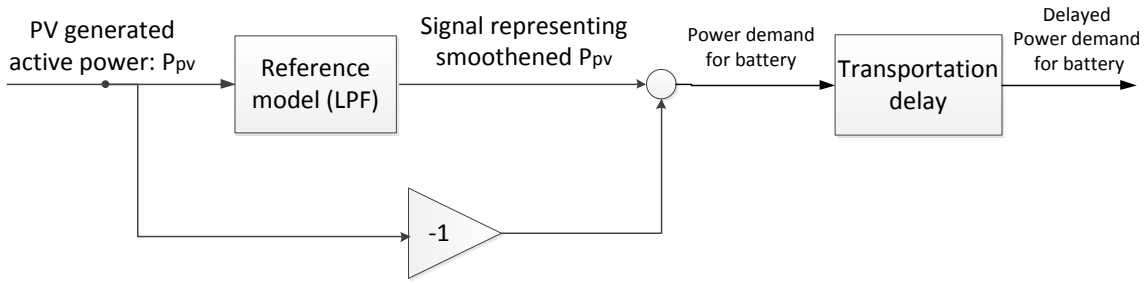

This battery control scheme smooth the PV output flicker with the help of a 'LPF (low pass filter)' block. The difference between the PV generated active power P_{pv}, and the smoothened P_{pv} becomes the power demand from the battery unit. Therefore the rectified PV power, which is the sum of P_{pv} and $P_{battery}$, follows the pre-defined wave shape of the LPF. The properties of the LPF

define the smoothness of the power output. The LPF is the Reference Model of the PV plant. The LPF path buffers the PV output flicker locally.

This Feedforwad control based on PV generated active power has two drawbacks. One is that it does not compensate for any load changes since it only measures and responds to PV output changes. The other problem is the inevitable transportation delay of the battery control signal. If multiple PV generators exist in the micro grid, the P_{pv} should be the summation of active power generated by every single PV generator. Consequently, the local active power measurements need to be collected and summed up by the centralized controller, and then the summation P_{pv} goes to the battery controller. This transportation delay causes the battery response always one step later than the PV active power change.

The frequency feedback control does not have above problems. Since each of the feedforward and feedback control has qualities which the other lacks, they can be combined and complement one another [22].

Figure 16 - Proposed battery control scheme that combines frequency feedback and PV power feedforward

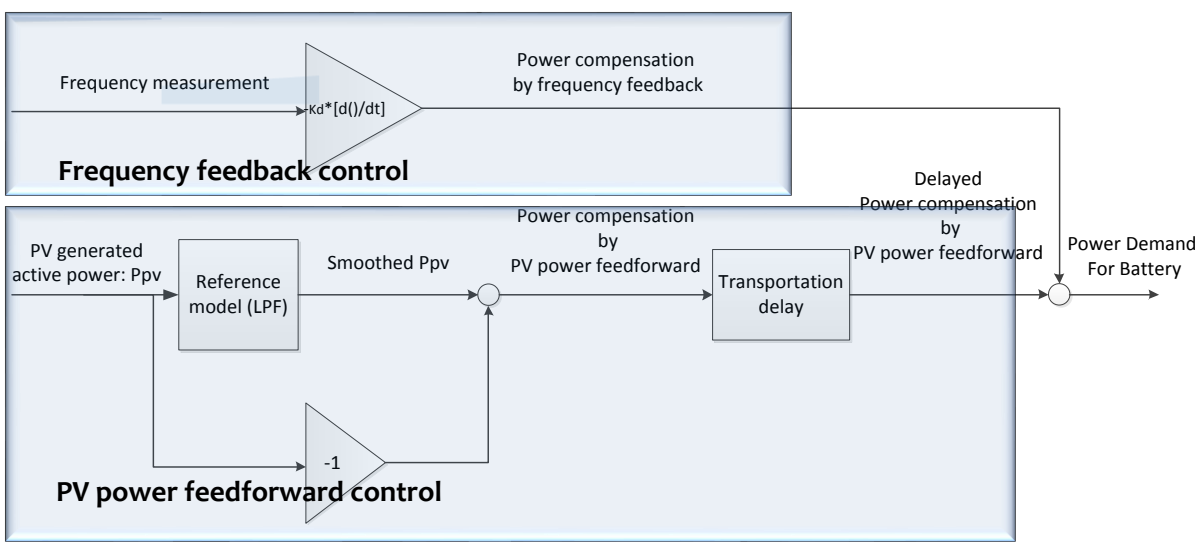

In the proposed scheme of Figure 16, there are two separate control modes. One mode is the proactive PV power feedforward control which smooth the PV output flicker locally. The other is the retroactive frequency feedback control mode which counteracts any power fluctuation that causes frequency deviation globally. Section 2.3 provides various designs of battery control schemes based on frequency measurement. The method chosen in the combined scheme is the frequency derivative method referred from [15] (the VSG method is a better choice as it produces less oscillation, but the frequency derivative method is applied to simplify the design). The frequency measurement goes through the derivative block to generate a power compensation signal for the battery.

The outputs from two modes are added up at one point. The final output "power demand for battery" responds to both frequency disturbance of the grid and PV generator output flicker at the same time.

The response of the proposed battery controller is illustrated in the simulation shown in Figure 17.

Figure 17 - Response of the proposed battery controller in the case of suddenly losing the PV generator of rated output

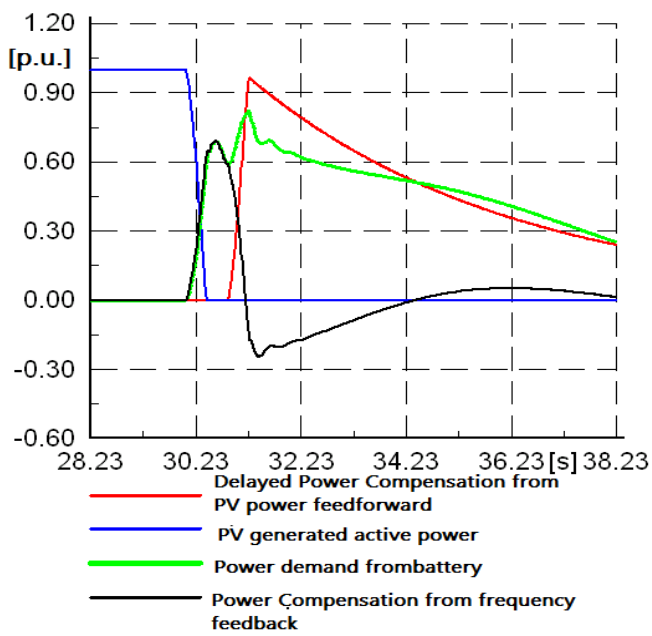

In this simulation, it can be seen the response of the battery controller in the case of suddenly losing the PV generator of rated output. The vertical axis represents the per unit power where the rated active power of the PV generator is the base value. As demonstrated above, the controller has two control modes, which are frequency feedback mode and PV power feedforward mode. The 'power demands from the battery' that generated by the two modes are noted as the 'Power compensation from frequency feedback' and the 'Delayed Power compensation from PV power feedforward' respectively. The frequency feedback mode instantaneously increases the demand from battery in proportion to the slope of frequency drop that caused by the shortage of supply. The PV power feedforward mode increases the demand from battery such that the sum of the PV generated power and the power demand from battery follows the wave shape of the LPF. The gap caused by the transportation delay is filled by the fast responding frequency mode. The output of the two modes adds up to generate the final power demand from the battery. The two modes of the battery control – frequency feedback and power feedforward – works together to stabilize grid. The different contribution of the two control modes will be thoroughly investigated through simulations in Chapter 5.

4. Modeling of the micro grid

The previous chapter proposed a battery control scheme aiming to increase the stability of the stand-alone hybrid micro grid with high PV penetration level. In this chapter we will introduce the micro grid model in order to test the performance of the battery control scheme in the context of the specified PV-Diesel micro grid.

4.1. Model of diesel generator

4.1.1. Physical description of diesel generator

Figure 18 - Diesel generator structure [19] (permission granted for republication)

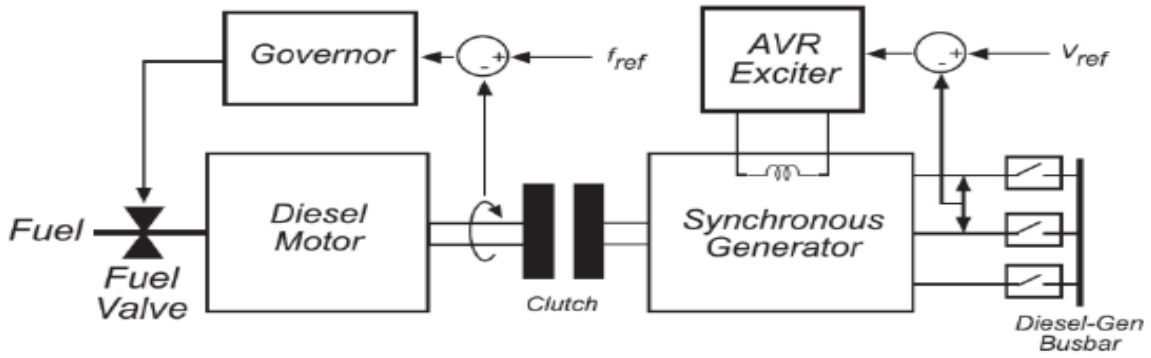

Figure 18 represents the diesel generator structure. A diesel generator is a synchronous generator whose shaft is driven by a diesel motor. Each Diesel generator has two controllers: Governor for active power control, which compares reference frequency with generator frequency, and the error is processed by the governor to determine the valve position of fuel inlet of the diesel motor; AVR for reactive power control, which compares the measured voltage with the reference value, and error is processed by the AVR to determine the excitation current of the generator exciter [23].

Above system structure is modeled as follows:

Figure 19 - Block diagram representation of the diesel generator structure

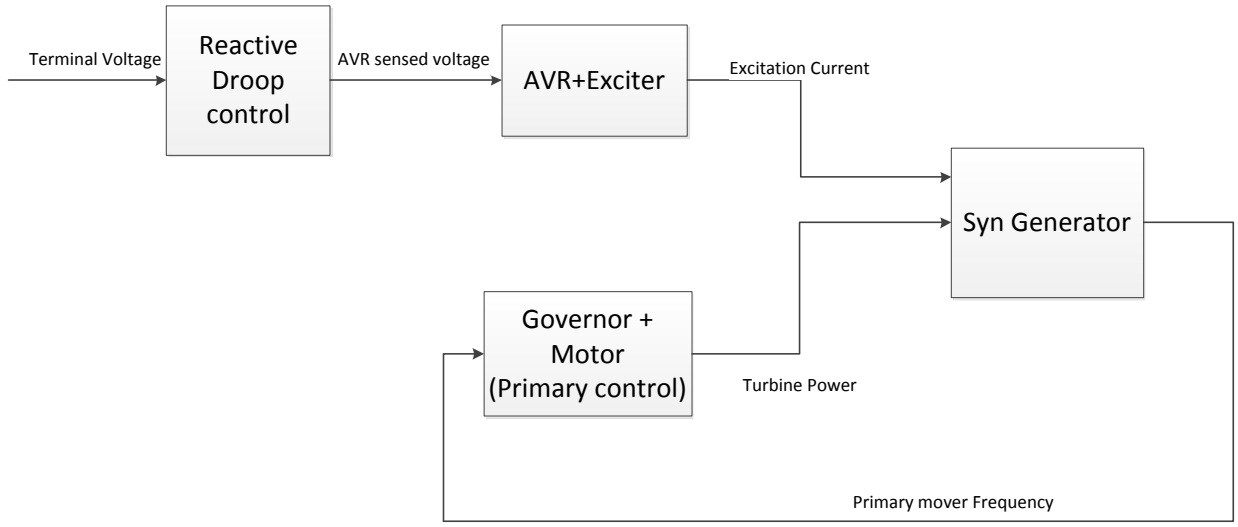

4.1.2. Governor control of diesel generator

The diesel engine provides driving power to the rotor of the synchronous machine by converting diesel energy to mechanical energy. The primary controller, which is also known as the governor, controls the level of driving power by adjusting the fuel rate to the diesel engine. Primary controller reacts to the load change in such way that it always adjusts the output power of the synchronous generator to match the load consumption. Since the system frequency is the indicator of power mismatch, the "primary mover frequency", or the "rotational speed of the rotor" is chosen as the reference of the primary control. In order to respond to the active power change as expected, the controller works by a pre-defined 'droop characteristic', where the active power output of the synchronous generator decreases as the frequency of the prime mover rises, and vice versa.

Figure 20 - Droop characteristic of Primary control

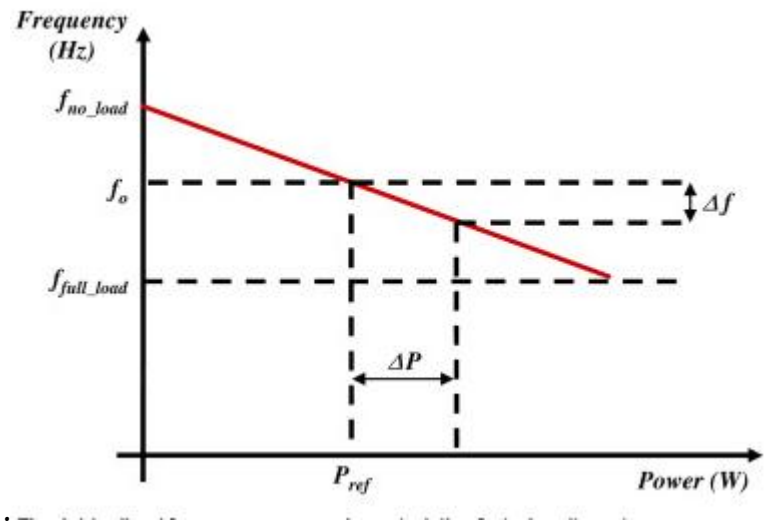

Figure 20 shows the droop characteristic applied for the primary control. The droop control produces a frequency dependent generator active power output. The droop control changes P to P+ΔP at the expense of reducing the prime mover's frequency by Δf. The slope of this line is defined as droop gain K. Each generator in parallel operation can have different droop gain, reflecting different active power contribution for a load change. Droop gain K can be as low as zero, indicating the generator output is independent of micro grid frequency. The two diesel generators in our model are set for the same droop gain, so that they response identically to any gird frequency change.

Figure 21 - Simulation of primary control of diesel generator (circuit)

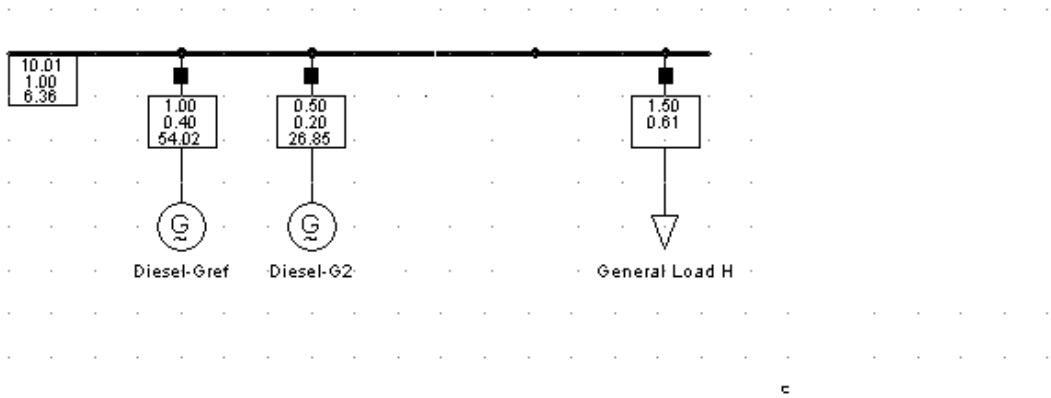

In order to study the primary control of diesel generator, a set of 2 diesel generators is modeled with a load where a step change of 25% is simulated. The model is shown in Figure 21. The data sheet used to build the diesel generator model is provided in appendix A. The droop characteristic regulates the diesel generators to compensate for the load change proportional to the system frequency excursion. The droop gain is set to 1 MW/Hz., indicating that 1 Hz frequency deviation would change the generator active power output by 1 MW.

Table 1 - Simulation of primary control of diesel generator (Summary)

Initial condition	event	Post disturbance results
Pg1=1.0MW Pg2=1.0MW Pload=2.0MW Freq=60Hz	Pload step up by 25% at 30sec	Pg1=1.25MW Pg2=1.25MW Pload=2.5MW Freq=59.85Hz

Figure 22 - Simulation of primary control of diesel generator (Waveform)

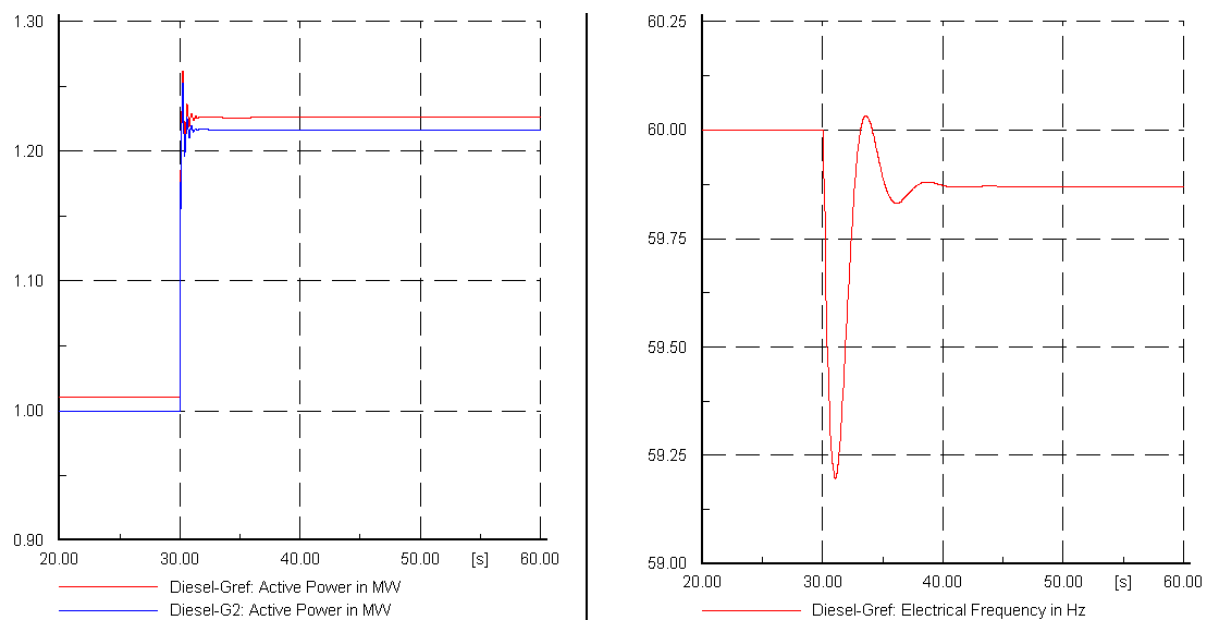

Table 1 and Figure 22 provide details of the simulation. The 2MW load demand was initially supplied by the two diesel generators, each of which providing 1MW active power. At 30sec the load demand stepped up by 25%. The frequency dropped rapidly before the governor increases the

active power of the diesel generator. The governor response is not instantaneous because of the existence of diesel combustion delay, electrical control box delay and actuator delay, yet the increased load demand is adequately supplied after the delay. It can be seen that the active power demand increment is distributed equally to each generator since the droop gains of both generators are the same. The frequency is slightly decreased in the new steady state in order to generate more active power.

4.1.3. Voltage control of diesel generator

The AVR, which is the abbreviation for automatic voltage regulator, determines the current value flowing through the rotor excitation winding of the synchronous machine by adjusting the voltage value applied across it. The thesis does not focus on the voltage regulation of the micro grid, yet the voltage control still needs to be implemented to maintain a realistic voltage level in the simulation. The AVR reacts to the load change in such way that it always adjusts the excitation current of the synchronous generator according to the voltage error between the set point and the sensed voltage, by which the generator terminal voltage is maintained at the pre-defined set point. The AVR and exciter system applied in this model is the IEEE type 1 excitation system. This type of system represents a continuously acting regulator with a rotating exciter system [8].

The generator terminal voltage is maintained at its reference value Vref by the self-adjusting AVR output, which is the reference excitation voltage of the generator. Usually the terminal voltage of the generator is chosen to be the input signal of the AVR. For paralleled generators, however, controlling the terminal voltage of each individual generator at exactly the same reference value with zero error is hard to achieve with conventional AVR. The resulting voltage mismatch between generators produces unwanted circulating current. To upgrade the voltage regulator for paralleled operation, the compensation circuit named ‘reactive droop control’ is added.

Figure 23 - Vector summation of reactive droop control

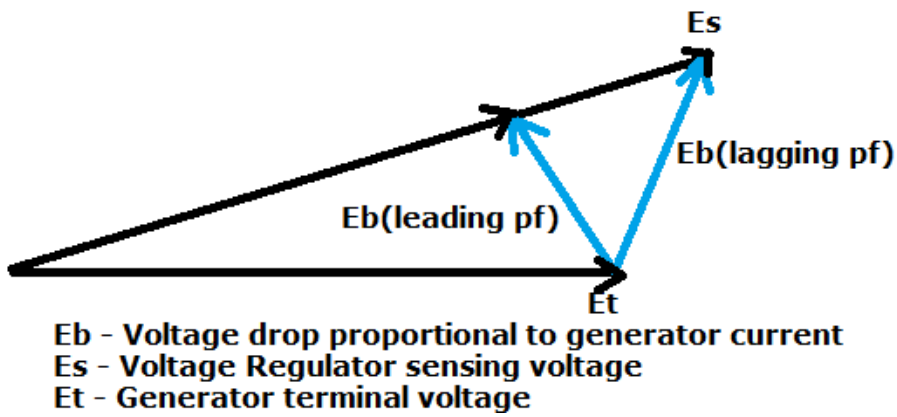

The vector diagram of this reactive droop control is shown in Figure 23. The circuit senses not only the generator terminal voltage, but also the generator current. This current combines with the voltage signal to develop a summed vector proportional to the reactive load [24]. This vector is then controlled by the AVR instead of the terminal voltage.

Figure 24 - Reactive droop curves

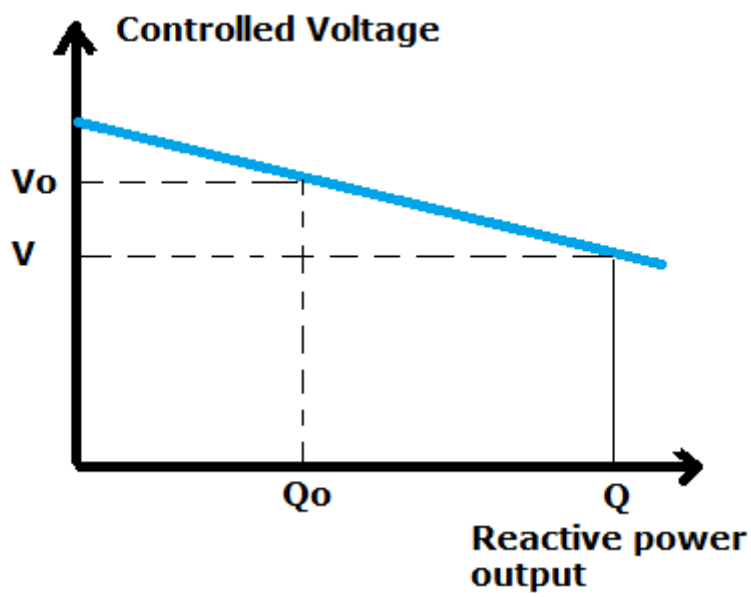

Figure 24 shows the voltage droop characteristic which describes the relationship between terminal voltage and reactive power generation. With reactive droop, the bus voltage droops with the

reactive load variation. When two generators are in parallel with the same droop gain and voltage set point, and power disturbance that would increase the reactive load on one generator or decrease the load on the other would make the droop control to change the terminal voltage in the direction to take the reactive load back to the balance point. [25] This type of control always counteracts any voltage mismatch among parallel generators, and consequently the circulating current is eliminated.

In order to study the reactive power of diesel generator, a set of 2 diesel generators is modeled with a load in the same way as the simulation circuit of the primary control (Figure 21). A step change of 0.6MVar is simulated. The droop characteristic regulates the diesel generators to compensate for the reactive load change proportional to the terminal voltage excursion.

Table 2 - Simulation of reactive droop control of diesel generator (Summary)

Initial condition	event	Post-disturbance results
Qg1=0MVar Qg2=0MVar Qload=0MVar Vbus=10kV	Qload step up to 0.6MVar at 30sec	Qg1=0.3MVar Qg2=0.3MVar Qload=0.6MVar Vbus=9.88kV

Figure 25 - Simulation of reactive droop control of diesel generator (Waveform)

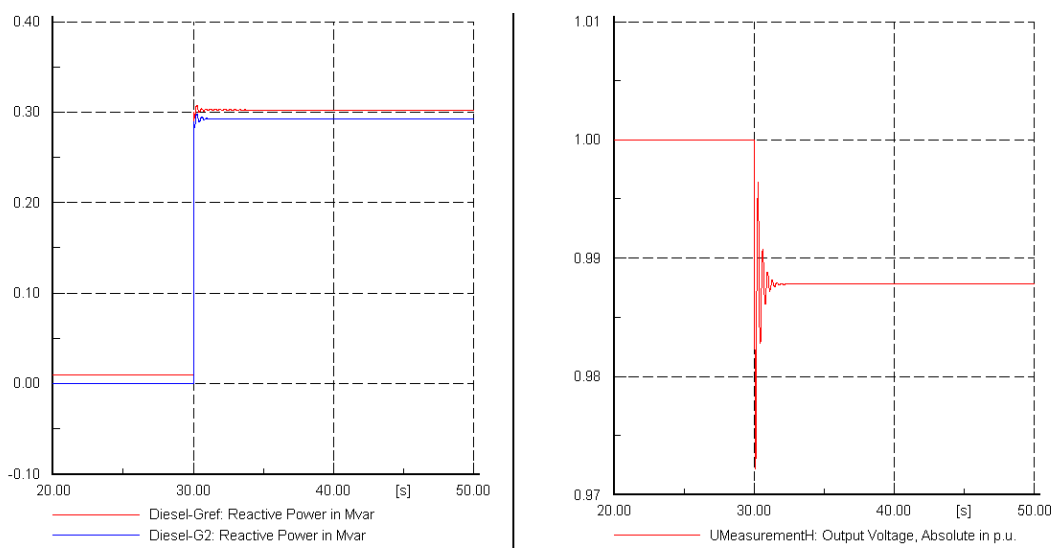

Table 2 and Figure 25 provide details of the simulation. No reactive power was initially supplied by the two diesel generators since only active loads exist in the micro grid. At 30sec the reactive load demand stepped up from zero to 0.6MVar. The reactive power supply increases promptly without obvious time delay since there is no mechanical process involved. It can be seen that the total reactive power increment is distributed equally to each generator since the droop gains are the same. The voltage is slightly decreased in order to generate more reactive power. The AVR response is similar with the active power droop control in the previous section.

4.2. Model of PV generator and battery

4.2.1. Physical description of the PV generator and the battery

Figure 26 - General structure of the PV Generator

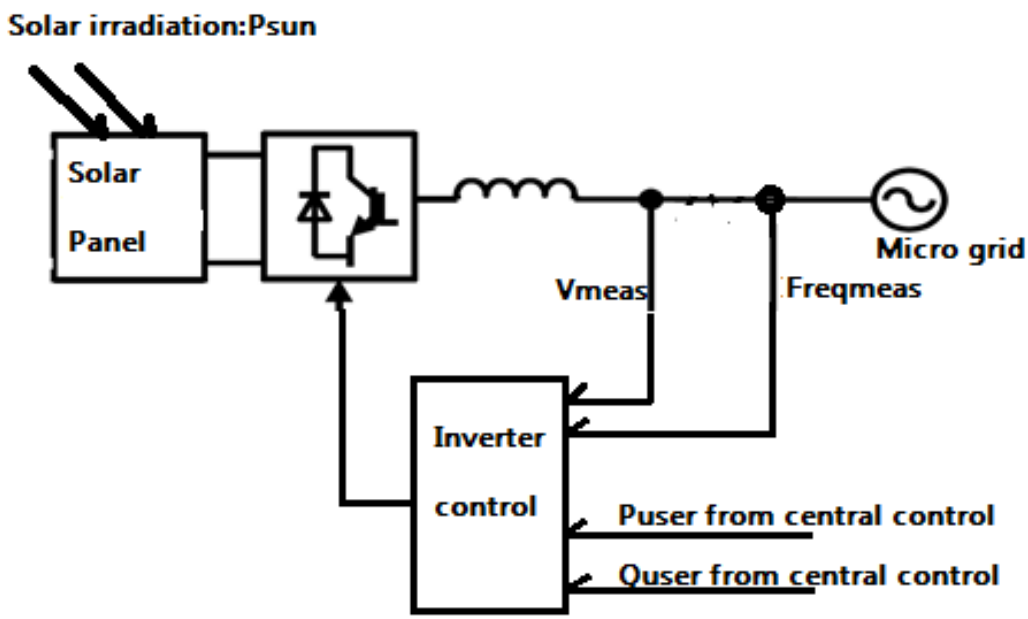

The PV Generator consists of two major components: the solar panel that converts solar energy to electric energy, and the DC-AC inverter that controls the amount of active and reactive power delivered to the micro grid. The inverter controller in this application is the SCHNEIDER CONTEXT XC 680KVA 1.5 model [26]. It measures the bus voltage and frequency locally for current control and protection functions. P_{user} and Q_{user} are user defined active power output and reactive power

output of the PV generator respectively, the values of which are usually provided by the central controller. Notice that the PV generator can only generate as much power as the sun provides, so the P_{user} value higher than P_{sun} will be limited to P_{sun}.

As for the battery, we use the same model as the PV generator, only that the limitation of P_{sun} no longer exists and negative P_{user} and Q_{user} values are introduced to enable bi-directional power flow of the battery. This model is equivalent to a PV generator with its PV panel being replaced by an infinite large battery. Consequently, the state of charge of the battery is not simulated in the context of the thesis.

4.2.2. Control signals of the inverter controller

Both the PV generator model and the battery model have P_{user} and Q_{user} as the inputs. The power output of the PV generator (or the battery) always follows the active power reference P_{user} and reactive power reference Q_{user}.

Figure 27 - The active power output P_{out} of the PV generator (or battery) controlled by the active power reference P_{user}

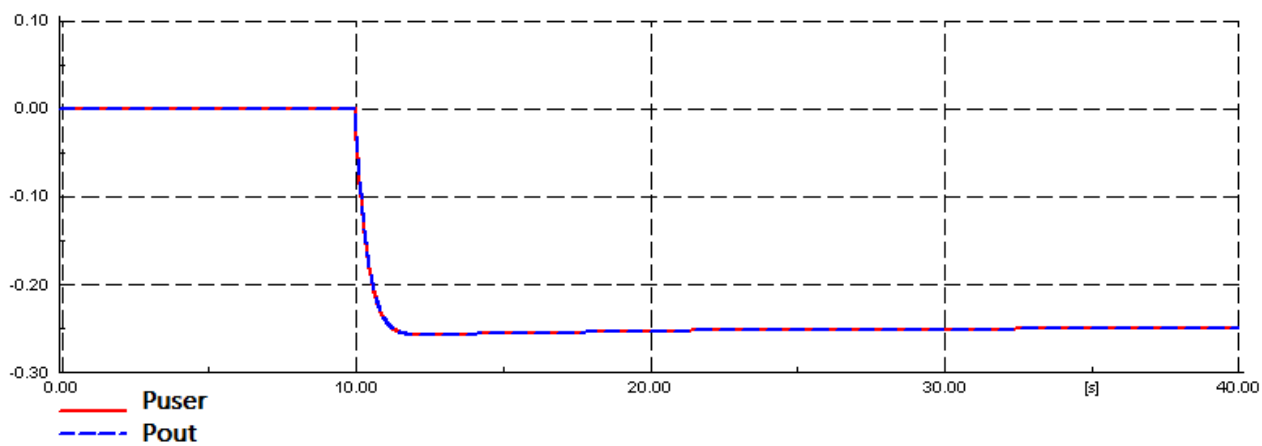

Figure 27 shows that the active power output of the PV generator (or battery) keeps in step with the active power reference P_{user}. The simulation result of Q_{user} is not presented in the text since it is similar to the P_{user} control.

Figure 28 – P_{out} reduction caused by variation of P_{sun}

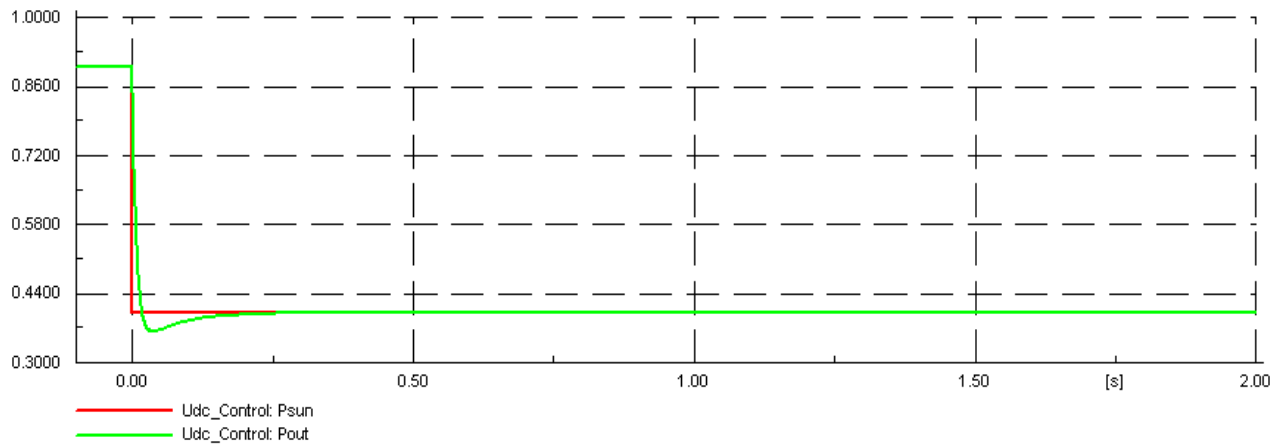

In addition to the two inputs, the PV generator has an exclusive parameter 'P_{sun}' which defines the solar irradiation level of PV. It sets up the upper limit of the active power generation capability. Figure 28 shows how the P_{sun} variation initiates the P_{out} reduction. P_{user} is set above 0.9 p.u. in the simulation, so it is not a limiting factor for P_{out}.

Figure 29 - Over frequency power reduction[26]

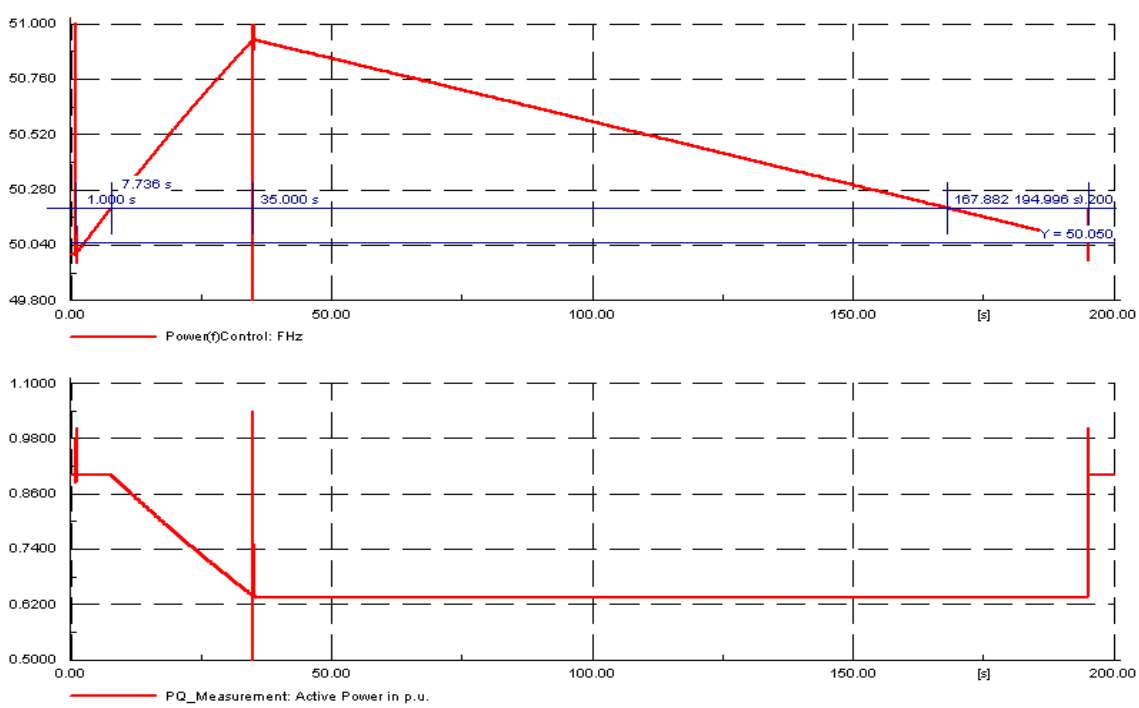

The PV model also has an inbuilt function to reduce the active power output when the grid frequency is above a certain threshold. The function of over frequency power reduction effectively decreases the risk of over frequency due to over generation.

The result provided in Figure 29 is based on 50Hz simulation. Three parameters define the characteristics of the controller – frequency at which PV begins power reduction, frequency at which PV returns to nominal operation, and the power reduction slope p.u./Hz. The PV generator is connected to the micro grid programmed with time varying grid frequency. The frequency begins to increase linearly from 50Hz at time zero. The power reduction begins when the frequency reaches the threshold 50.2Hz. The reduction amount is proportional to the frequency deviation. The active power output dose not recover gradually as the frequency recovers (30sec-190sec), but steps back to the original value as long as the frequency reaches the recovery threshold 50.05H.z

4.3. Control system structure of the micro grid

Figure 30 - Control system overview of the micro grid

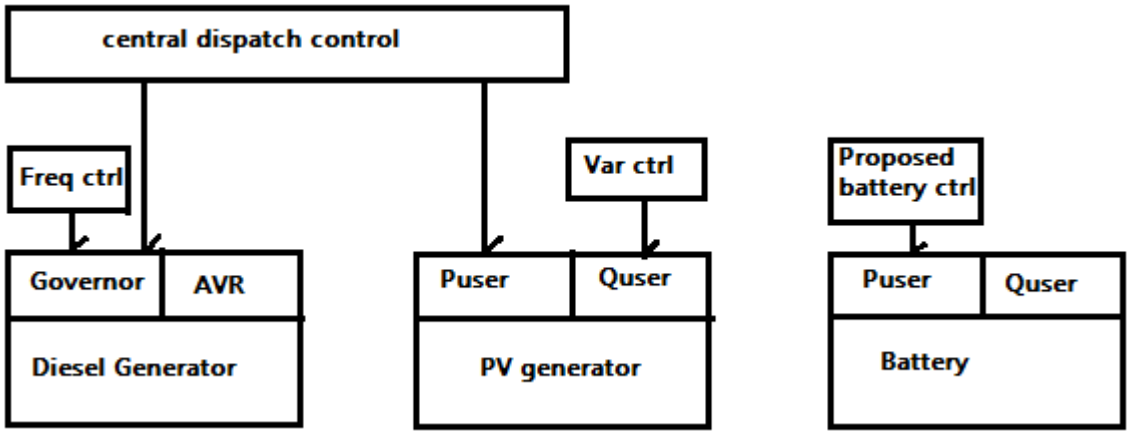

Figure 30 shows the simplified control system structure of the micro grid. Section 4.1 and 4.2 have already covered the local control systems of the diesel generator, PV generator and the battery. This section will introduce the higher level controls that provide reference to the local controls.

4.3.1. Frequency (secondary) control of the diesel generator

Primary control of the diesel generator helps retrieve the active power balance in the micro grid, but it also introduces a steady state error to the micro grid frequency. In order to recover the nominal frequency, the secondary control is introduced as a supplementary control method to the primary control. [27]

Figure 31 - Frequency (secondary) control

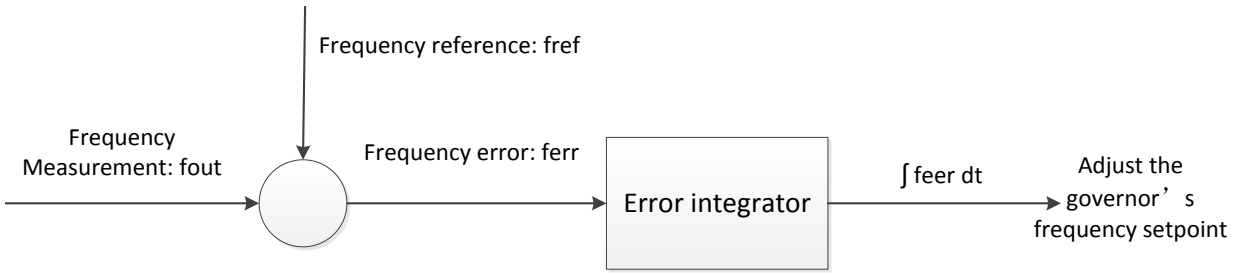

The frequency error goes into an integrator, and then the integrated signal is transmitted to the governor of each diesel generator. Subsequently, this signal modifies the frequency set point inside the governor. By changing the set point, we can adjust the active power output and bring the frequency back to the nominal value. In this case, the integrated frequency error is equally allocated to each generator, which means both generators have the same contribution in secondary control. The error can also be unevenly assigned to the diesel generators.

Figure 32 - Graphical representation of frequency control

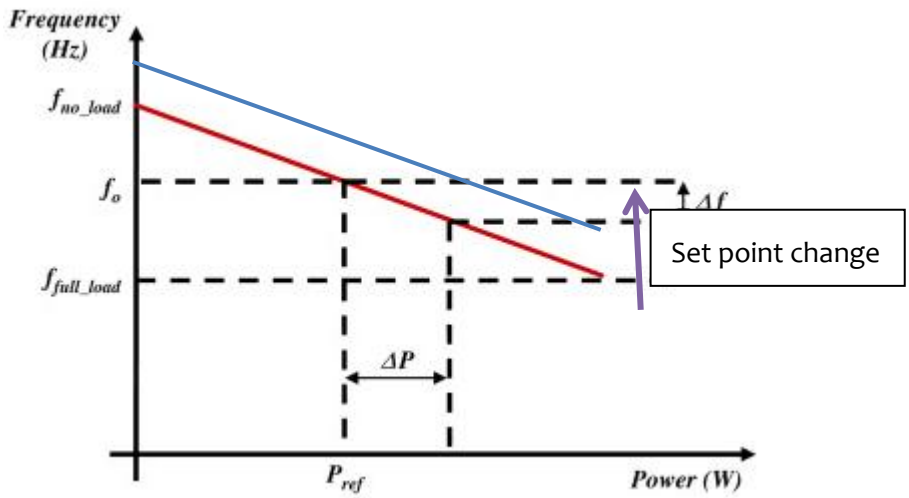

For graphical explanation, changing frequency set point means moving the droop line vertically while remaining its slope unchanged. To increase the power output by ΔP, the controller can either push down the frequency by Δf (the action of primary control), or raise the frequency set power so that the frequency remains f_o. Usually the secondary control, whose speed ranges from seconds to minutes, is slower than primary control to avoid any interaction with the primary control. Therefore, it is often observed that the frequency drops at the instant of load increase, and recovers slowly to the nominal value thereafter.

In section 4.1, the response of primary control was simulated. The secondary control simulation uses the same circuit diagram and disturbance as the primary control.

Figure 33 - Comparison between the response of the diesel generator with and without the secondary control

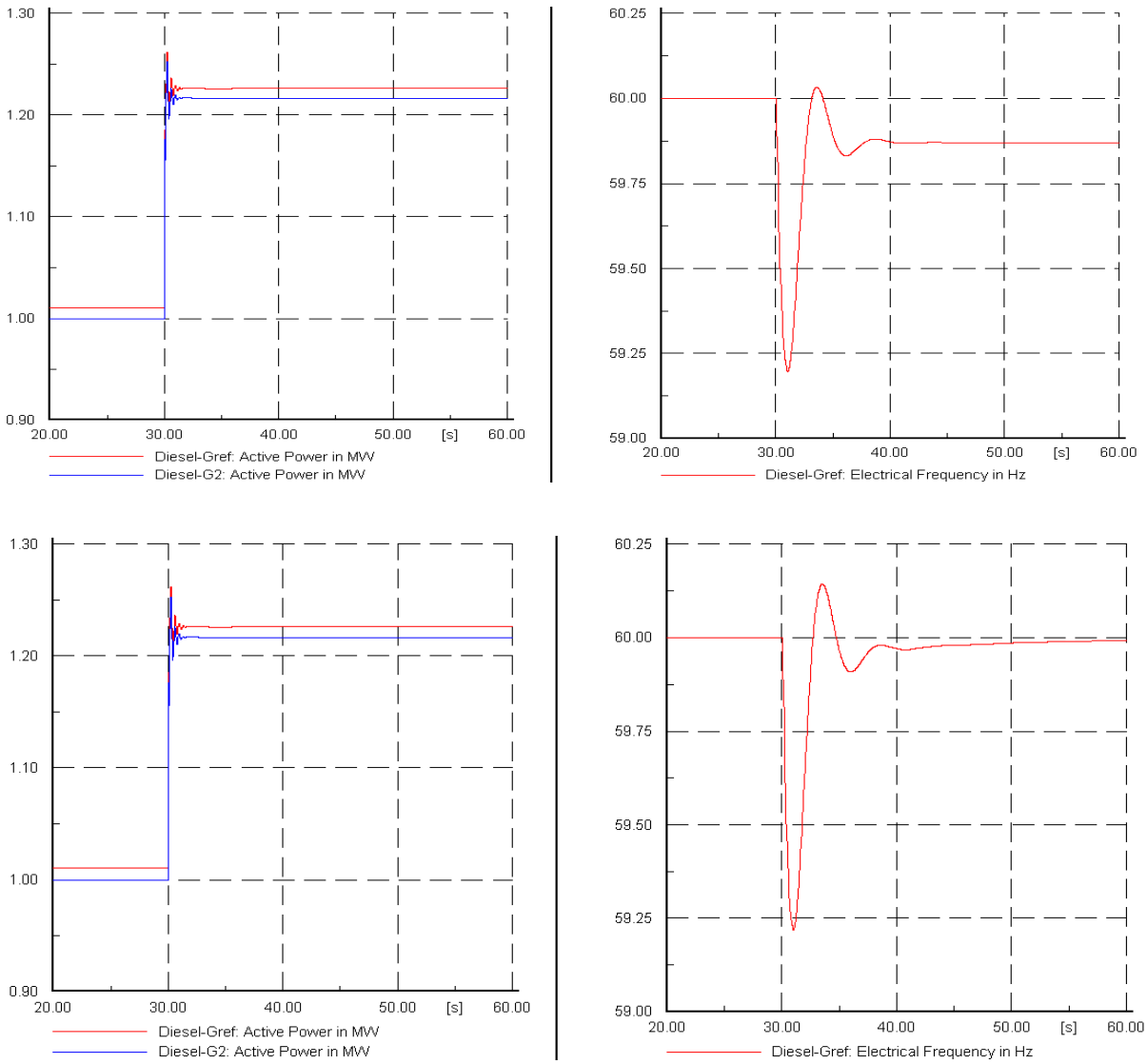

With only the primary control, the additional power demand is supplied by the diesel generators, while a steady state frequency error appears after the disturbance. When the secondary control is added, it shows no effect at the instant of the disturbance because it is slower than the primary control. However, the frequency gradually returns to the nominal value as time goes on with the help of the secondary controller.

4.3.2. Reactive power control of the PV generator

PV generator is able to provide reactive power without solar irradiance, which offers an alternative source to supply reactive power other than the diesel generators. Similar to the reactive control of the diesel generator, the control mode is still the 'reactive droop'. The implementation of reactive droop for PV generator is less complex than the diesel generator since the reactive power output is directly controlled by Q_{user} instead of the excitation voltage. As required by the droop control, the linear relationship between the terminal voltage error and PV reactive power need to be established, which is easily achieved through the command signal Q_{user}.

Figure 34 - PV Var control

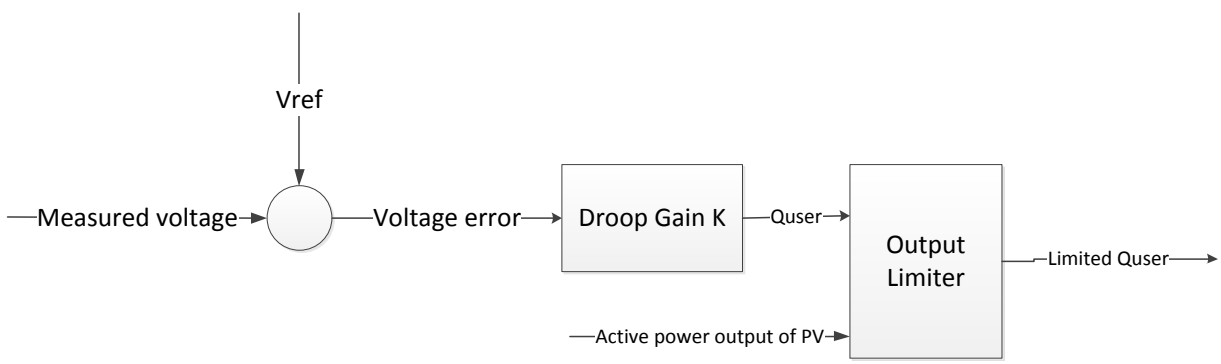

Q_{user} can be derived by simply multiplying a droop gain K to the voltage error. The actual output of the controller is limited by the MVA capacity of the PV generator. Considering other devices, such as diesel generator and SVC, could also preform reactive power compensation, the active power generation is designed to be prioritized over reactive power for the PV generator. The Quser is compared with $\sqrt{S^2 - P^2}$, and the smaller one becomes the Limited Q_{user}.

In the proposed hybrid micro grid, the PV generator and the diesel generators control the busbar voltage together with the same droop gain. In order to study the reactive power control of the PV generator and the diesel generator combined, a set of 2 diesel generators and a PV generator is modeled. The model is shown in Figure 35.

Figure 35 - Simulation of reactive power control of the PV generator and the diesel generator combined (Circuit)

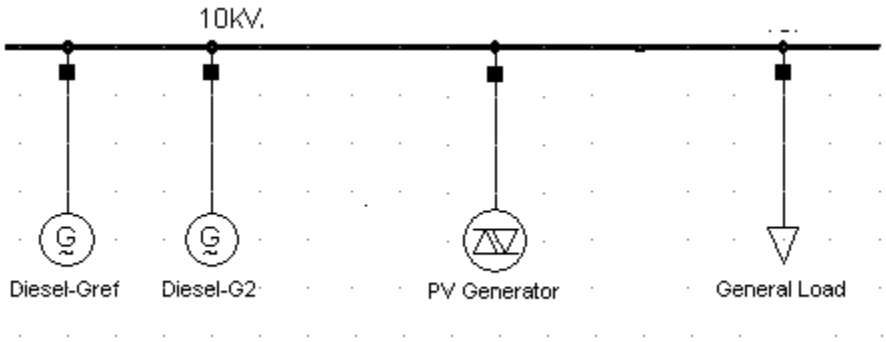

A step change of 0.6MVar is simulated. The droop characteristic regulates the PV generator and the diesel generators to compensate for the reactive load change proportional to the terminal voltage excursion.

Table 3 and Figure 36 provide details of the simulation. No reactive power was initially supplied by the PV generator or the two diesel generators. At 30sec, the reactive load demand stepped up from zero to 0.6MVar. The reactive power supply increases promptly. It can be seen that the total reactive power increment is distributed equally to the 3 units since the droop gains are the same. The voltage is slightly decreased in order to generate more reactive power.

Table 3 - Simulation of reactive power control of the PV generator and the diesel generator combined (Summary)

Initial condition	event	Steady state result
Qg1=0MVar, Qg2=0MVar Qpv=0MVar Qload=0MVar Vbus=10kV	Qload step up to 0.6MVar at 30sec	Qg1=0.2MVar, Qg2=0.2MVar Qpv=0.2MVar Qload=0.6MVar Vbus=9.92kV

Figure 36 - Simulation of reactive power control of the PV generator and the diesel generator combined (Waveform)

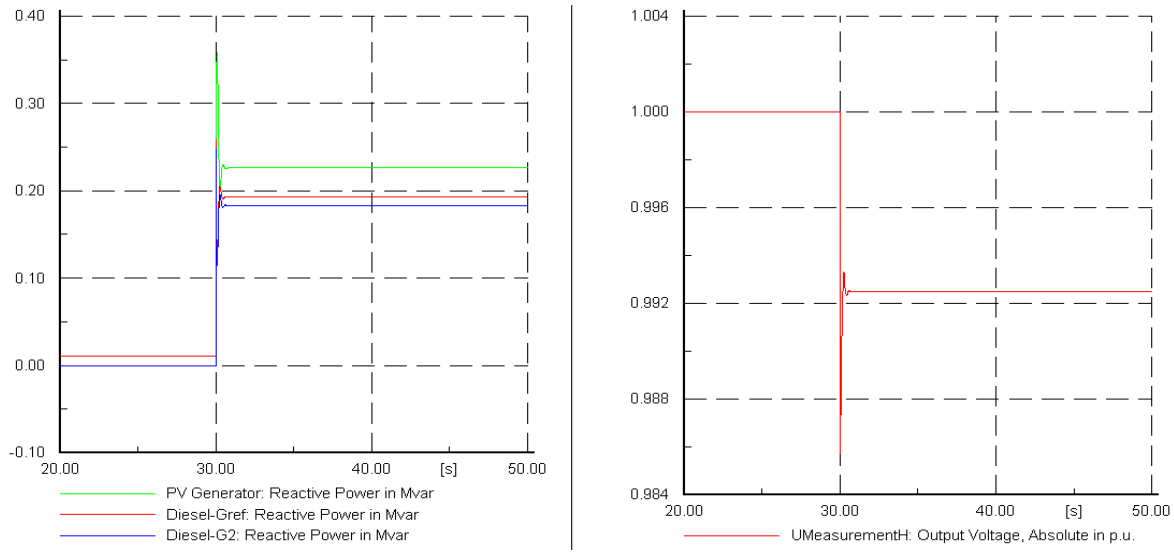

4.3.3. Dispatch (tertiary) control of the diesel and PV generator

The dispatch control, as the central controller above the primary and the secondary control, determines the share of active load between the PV generator and the diesel generator. It performs two functions. The first function is to control the on/off switch of the diesel generators. The efficiency of the diesel generator varies according to its loading. Normally maximum efficiency is achieved at its rated power and the efficiency reduces as the output power decreases. The dispatch signal turns off one generator when both generators are running at low efficiency, and turns it on again when only one generator is insufficient to supply the load. The second function of the dispatch controller is to limit the output of the PV generator when the PV becomes the dominant source of active power. PV and diesel generators share the total demand and PV always operates at its max possible power contribution. However, the domination of PV generation would amplify the detrimental effect of frequent PV output flicker on frequency stability. Therefore, a limitation is intentionally imposed on PV to keep the output of the diesel generator set not lower than 1MW.

In order to study the dispatch control, a set of 2 diesel generators and a PV generator is modeled with a load in the same way as the reactive power simulation circuit in Figure 35.

Table 4 - Simulation of the dispatch control (Summary)

Initial condition	event	Steady state result
Pg1=1MW Pg2=1MW Ppv=2MW Pload=4MW	Pload step down to 3.2 MW at 30 sec	Pg1=1.2MW Pg2=0.0MVar Ppv=2.0MW
	Pload step down to 2.4 MW at 50 sec	Pg1=1.0MW Pg2=0.0MVar Ppv=1.4MW

Figure 37 - Simulation of the dispatch control (Waveform)

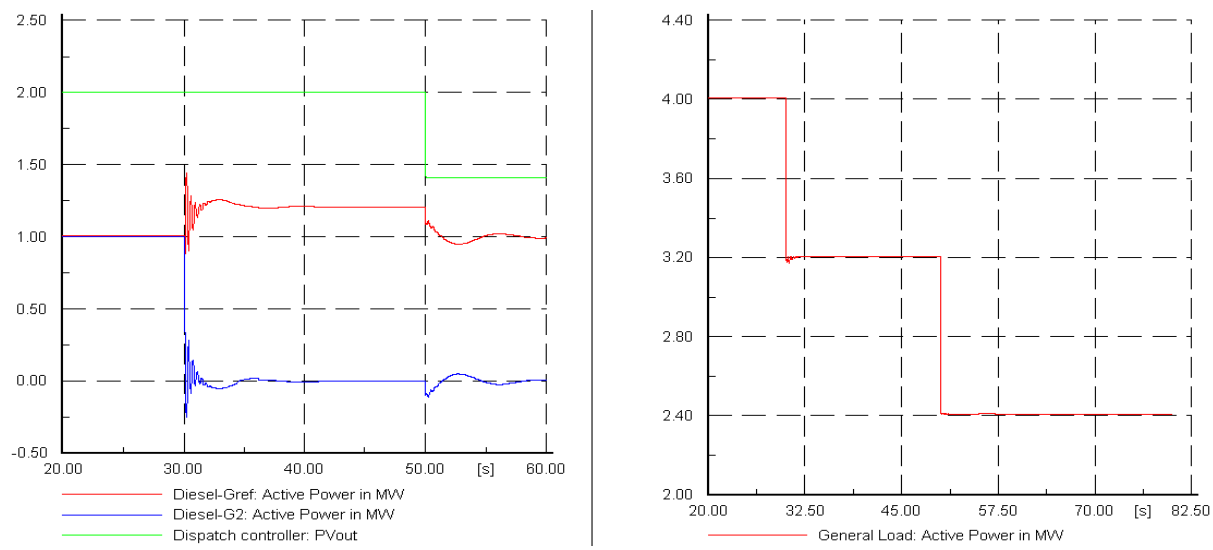

Table 4 and Figure 37 provide details of the simulation. A 4 MW active load was initially supplied by two 1MW diesel generators and one 2MW diesel generator. At 30 sec, P_{load} steps down to 3.2 MW and the corresponding total diesel generator output reduces to 1.2 MW. The generator G2 is shut down to maximize the active power output of G1, whereby the overall diesel generator efficiency is improved. The PV generator keeps operating 2 MW output at this stage. After the second demand reduction at 50sec, P_{load} steps down to 2.4 MW and the corresponding diesel generator output could have been 0.4 MW if the PV generator's output remained unchanged. As a matter of fact, the

dispatch controller reduces the PV active power output to maintain the total diesel generator output not lower than 1MW. The PV active power generation is constrained for higher grid frequency stability.

4.4. Micro grid model

Previous sections in this chapter have introduced the components and their corresponding controllers of the micro grid. Together with the battery controller proposed in Chapter 3, they complete the model of the micro grid. The micro grid model structure is shown in Figure 38 and the specifications are listed in table 5. The DC-AC inverters are integrated into the PV generator and the Battery model, so it is not clearly shown in the micro grid model presented in Figure 38.

Figure 38 - The structure of the complete hybrid micro grid model

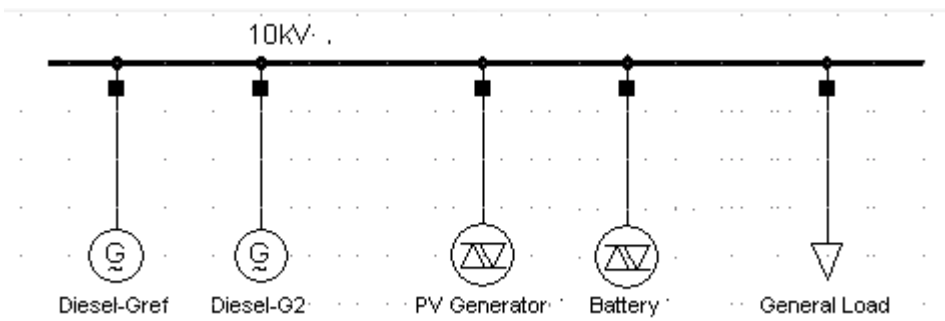

Table 5 - Components specifications of the hybrid micro grid model

Equipment type	Specifications
Diesel generator x 2	Capacity:2 MVA *2; Generator set PF: 0.8
Photovoltaic Generator	Capacity: 2MVA
Battery System	Inverter power rating: 2MW (3.6MW peak) ; Battery size: 10MW*sec
Constant Load	3MW Frequency & Voltage independent

This simplified network contains one 10kV busbar where two diesel generators, one PV generator and one battery are connected with a constant 3MW load.

The set of two diesel generators is rated in MVA at 0.8 power factor lagging. This 0.8 power factor is not the load power factor. It is a nominal power factor used to calculate the MW output of an engine to supply the power for a particular alternator. [28] The true output of each diesel generator is therefore 0.8 times 2MVA, which equals 1.6MW.

The rated power of the PV generator is 2MVA. Ideally it can generate 2MW active power when there is adequate solar irradiation, in which case the diesel generator set supplies the remaining 1MW active load. In cloudy days, when the PV generator cannot provide any active power, the 3MW active loads are fully supplied by the two diesel generators.

The steady state power rating of the battery should be at least equal to the rating of the PV generator, so that the battery is able to fully support the loads for a short period of time in the absence of PV. The instantaneous power rating and the battery size is derived by simulating the worst case disturbance in the micro grid, which will be covered in the next chapter. Ratings of the battery system are in 'MW' instead of 'MVA', because the battery only provides active power in this design.

4.5. Summary

Until this stage, the information of the devices and their controls of the stand-alone hybrid micro grid model have been fully covered. In order to supply the load optimally with the generation units of the hybrid micro grid, these devices are connected and regulated via a multi-layer control system. In order to maximize the fuel efficiency and to limit excessive PV generation, the central dispatch control regulates the active power output of the diesel generators and the PV generator. It is achieved by communicating with the local controls of the diesel generators and the PV generator. The local controls, including secondary control, primary control and battery control, adjust the

output of the generation units according to either the locally measured data or the request from the higher level controller.

The complete micro grid model is built to serve the purpose of providing a realistic dynamic response in the simulation of the proposed battery control scheme.

5. Simulation of the hybrid micro grid

The simulation in this thesis focuses on testing the effectiveness of the battery power compensation under various active power disturbances, including load demand reduction, PV power increase, load demand increase and PV power reduction. The PV penetration in full load condition is 2MW / (1.6MW*2) =62.5%, in which case, the micro grid frequency becomes highly unstable due to reduced inertia versus generating capability. It will be shown that the stability is maintained with the support of the battery controlled by the proposed scheme. The micro grid arrangement and specifications for the test is shown in Figure 38. In Chapter 3, it has been stated that the battery control scheme applies two control modes to stabilize the micro grid – the PV power feedforward mode and the frequency feedback mode. In order to explicitly demonstrate the effect of each control mode for micro grid frequency stabilization, the simulation will follow the order of 1) simulating the disturbance without battery control, 2) only with the frequency feedback control mode, 3) only with the power feedforward control mode, 4) with both modes operating together. The detail is shown in Figure 39. Notice that the generator on/off switch of the dispatch control is disabled for all the following simulations in order not to introduce additional unpredicted power disturbance during the simulation.

Figure 39 - The order of simulation of different battery control modes

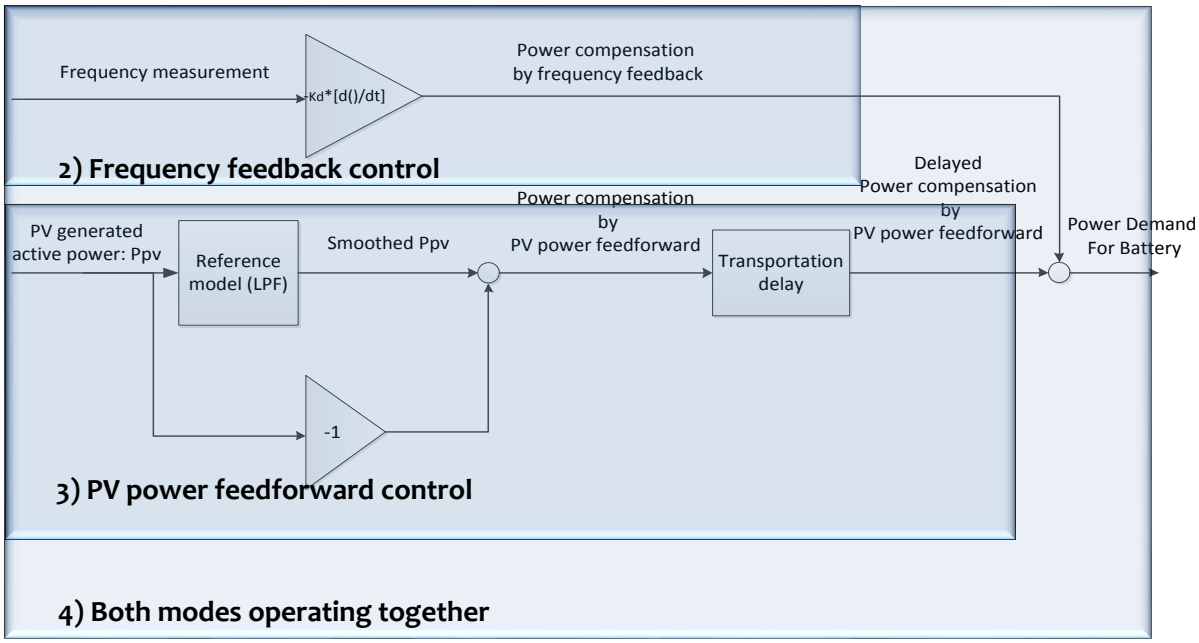

5.1. Case 1: PV output reduction

Figure 40 - Simulation 1: PV output reduction without the battery support

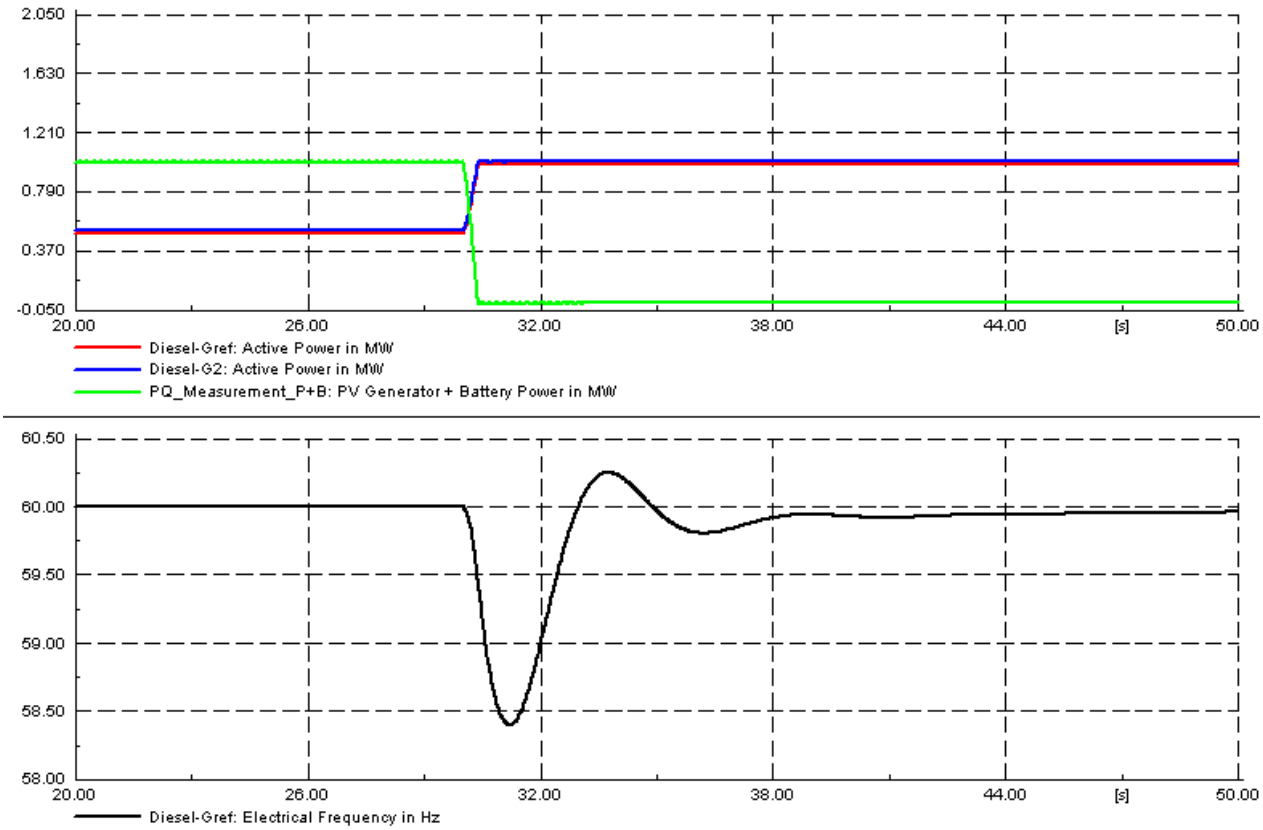

The first case examines how the system responses to 1 MW active power reduction of PV generator. It happens very often in practice in cloudy days. Initially the PV generator is running at 1MW output and the diesel generators at 0.5MW each. The PV power steps down at 30sec and the generators' output step up instantaneously to supply the active power shortage (Figure 40). It takes a few seconds for the diesel generators to increase its driving torque of the rotor when the demand suddenly goes high. The problem is severer when one of the two generators is shut off to achieve higher diesel efficiency, in which case, it takes as long as 5 to 10 seconds to resynchronize the machine and reach the generator's full power.

The required extra power is provided by the kinetic energy reserve of the rotating mass in the first few seconds. Consuming the kinetic energy reserve slows down the rotor and decreases the grid

frequency. The frequency recovers later due to the control action of the primary and secondary controller. The first simulation is performed without the battery support, so the extra active power demand is totally supplied by the diesel generators.

Without the support of the battery, the maximum frequency excursion is 1.4 Hz.

Figure 41 - Simulation 2: PV output reduction supported by the frequency feedback control mode of the battery

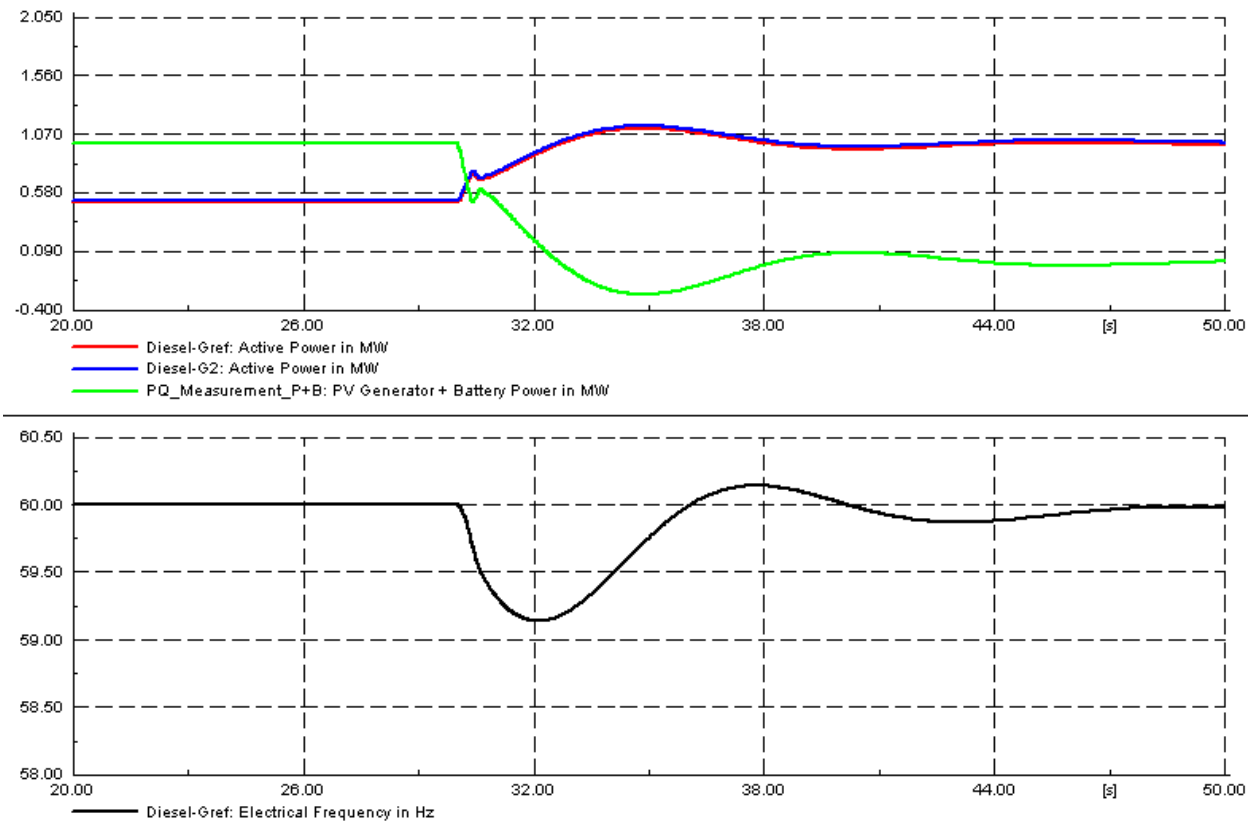

The same simulation is repeated with the frequency feedback mode of the battery controller enabled (Figure 41). The battery provides additional power proportional to the frequency derivative at the instant of the PV power reduction. The "PV generator + Battery power" curve is the summation of PV and battery active power output. The battery supplements the fast declining PV power and the combined output decays slower than not having the battery support. Consequently,

the frequency excursion is smaller when a portion of the extra load is supplied by the battery instead of the kinetic energy reserve.

With the frequency feedback control of the battery, the maximum frequency excursion is 0.8 Hz. The settling time is about 10 seconds. The derivative gain Kd is set to 0.5 in the simulation. Further increasing the gain leads to smaller frequency excursion but longer settling time.

Figure 42 - Simulation 3: PV output reduction supported by the PV power feedforward control mode of the battery

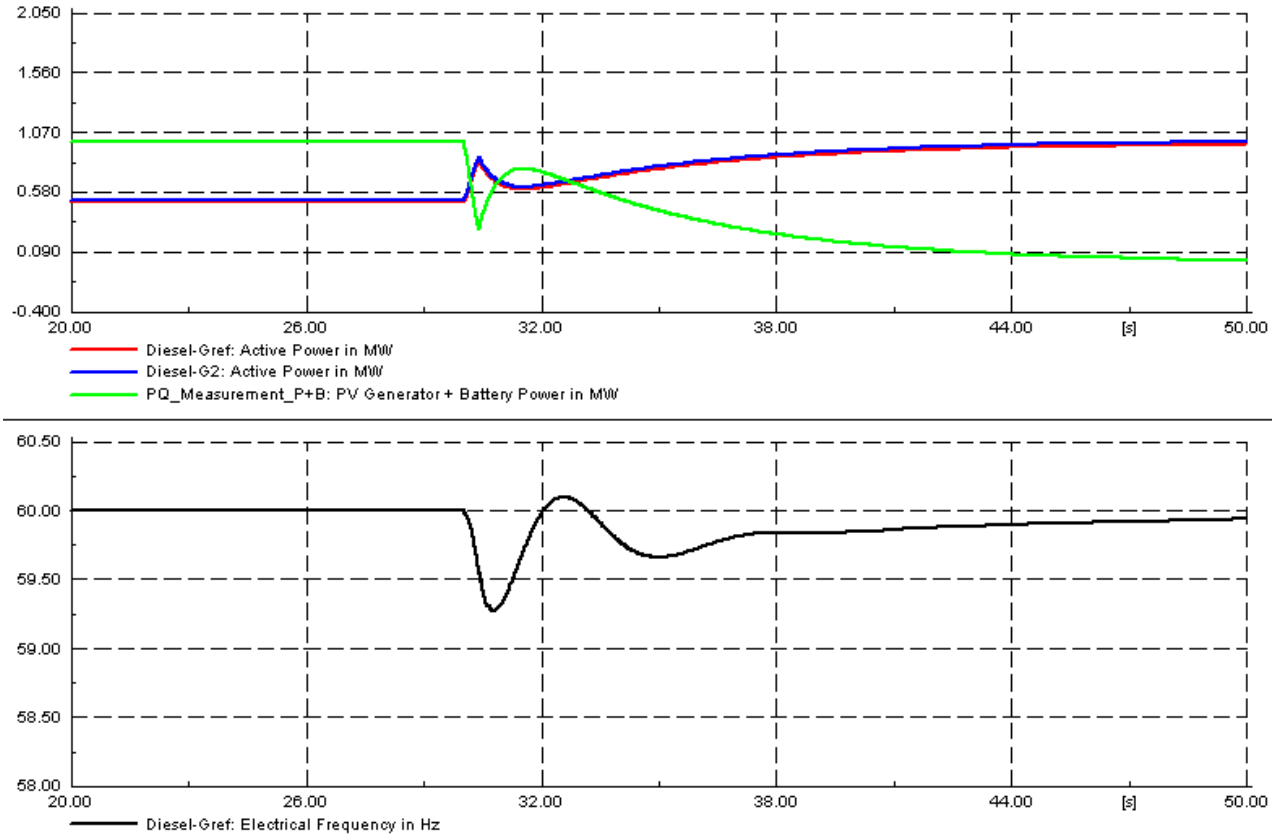

The same simulation is repeated again with the PV power feedforward mode of the battery controller enabled (Figure 42). This mode measures the active power output at the PV terminal and sends the measurement to the battery controller. Subsequently, the battery supplies additional power to smooth the discontinuous step change of PV power. The rectified PV power, shown as the

“PV generator + Battery power” curve, follows the pre-defined wave shape of the LPF. The properties of the LPF define the smoothness of the power output. The battery supplements the fast declining PV power and the combined output decays slower than not having the battery support. The slow power reduction gives the diesel generators extra time for the diesel generators to increase its input mechanical power, so the generators do not need to spend too much of their kinetic energy reserve in the first few seconds to feed the extra loads. There is still an instantaneous frequency drop at the moment of PV power stepping down, because the transportation delay of the measured signal from the PV power meter and the battery slows the action of the battery when one device is located separately to the other. It can be observed in the above figure that the rectified PV power does not follow the pre-defined wave shape of LPF perfectly due to the delay of battery action.

With the PV power feedforward control of the battery, the maximum frequency excursion is 0.7Hz. The frequency recovers faster than having the frequency feedback control mode alone.

Figure 43 - Simulation 4: PV output reduction supported by both the PV power feedforward control mode and the frequency feedback control mode of the battery

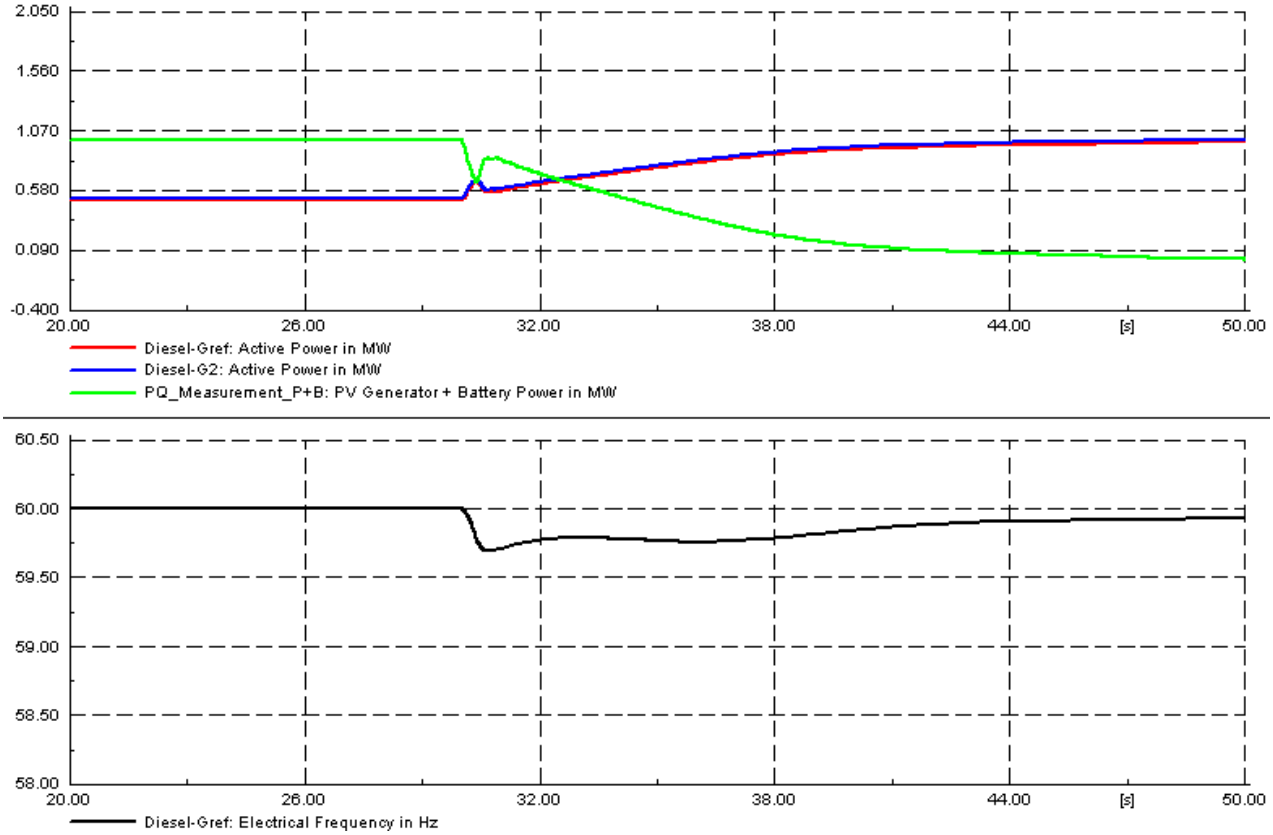

The two control modes are based on different principles, but they both acts towards the same goal of reducing the frequency excursion. It can be expected combining the two control modes gives better performance than using either control path alone.

The result (Figure 43) validates the assumption that combing both modes gives us the minimum frequency excursion ever compared to the earlier tests. The frequency freedback mode responds to disturbances promptly but it introduces oscillations; the PV power feedforward mode has a slower response but it does not introduce oscillations. The two modes complement one another perfectly. The "PV generation + battery power" curve in above Figure shows that the rectified PV power closely approximates to the pre-defined wave shape of LPF.

With the support of the battery, the frequency stability is strengthened, and therefore longer delay is allowed to adjust the diesel generators. When the micro grid is suddenly short of active power

supply, the loads would not drain the kinetic energy reserve or create severe frequency excursion. The frequency of the micro grid is mainly supported by the battery power in transient disturbances. The rectified PV power supported by the battery declines so slow that the primary control of the diesel generator has enough time to increase its mechanical input slowly and steadily. As a result, the operator can freely shut off one of the diesel generators at low loading condition to achieve higher diesel efficiency without worrying about the rebooting delay at high loading condition

With both control modes enabled, the maximum frequency excursion is 0.3 Hz.

5.2. Case 2: Load demand reduction

Figure 44 - Simulation 1: Load demand reduction without the battery support

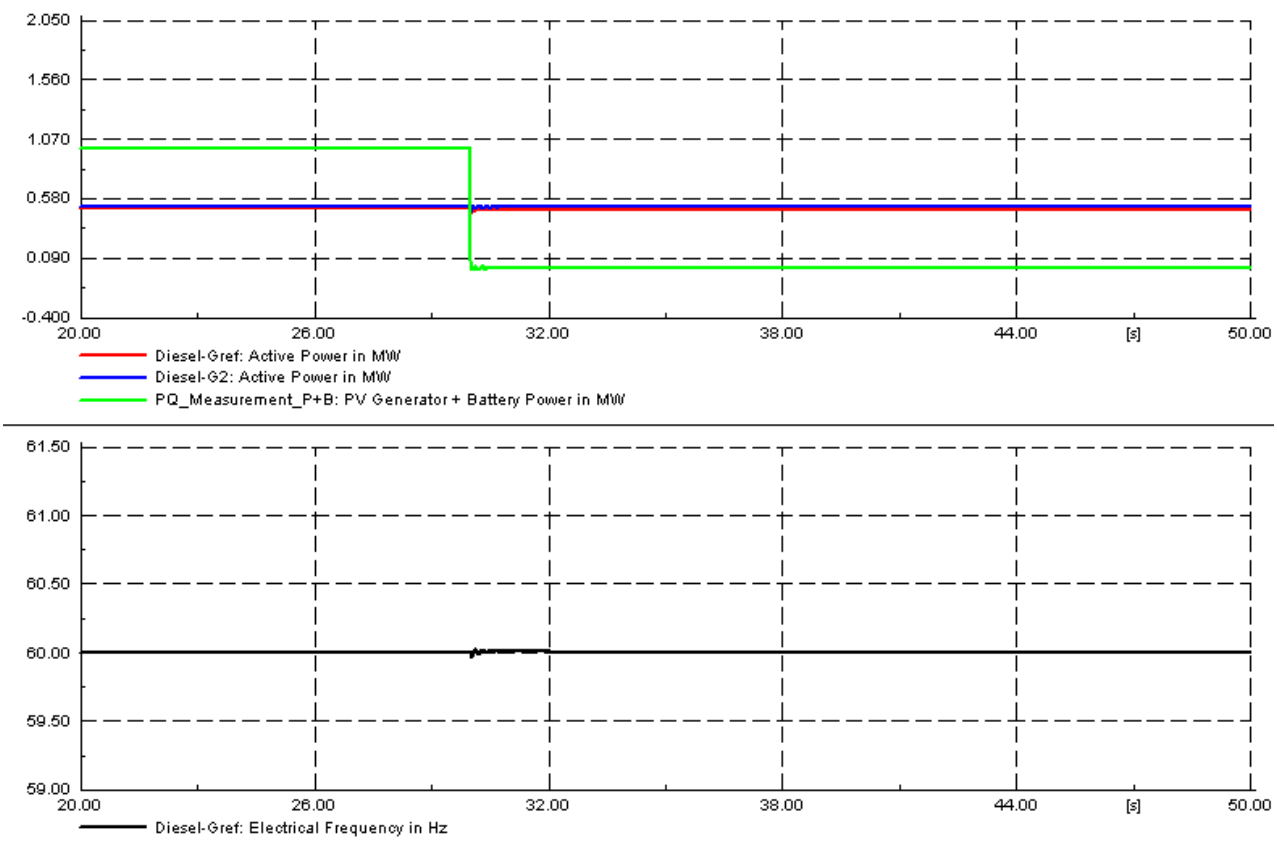

The second case examines how the system responses to 1MW active load reduction. Initially, the two diesel generators deliver approximately 0.5 MW each and the PV delivers 1MW. The load reduces by 1MW at 30sec. In order to match the generation with the reduced power consumption,

the PV power steps down by 1MW instantaneously. This is achieved by the control action of the central dispatch controller (Section 4.3.3). The dispatch controller limits the output of the PV generators such that the output level of total diesel generation is maintained not lower than 1MW. This is to avoid amplifying detrimental effect of frequent PV output flicker on the frequency stability. Since the diesel generation totals 1MW at time zero, it cannot decrease further for this load reduction. Consequently, only the PV output steps down to prevent over generation.

Without the support of the battery, the frequency excursion is 0 Hz owing to the prompt response of the PV generator.

Figure 45 - Simulation 2: load reduction supported by the frequency feedback control mode of the battery

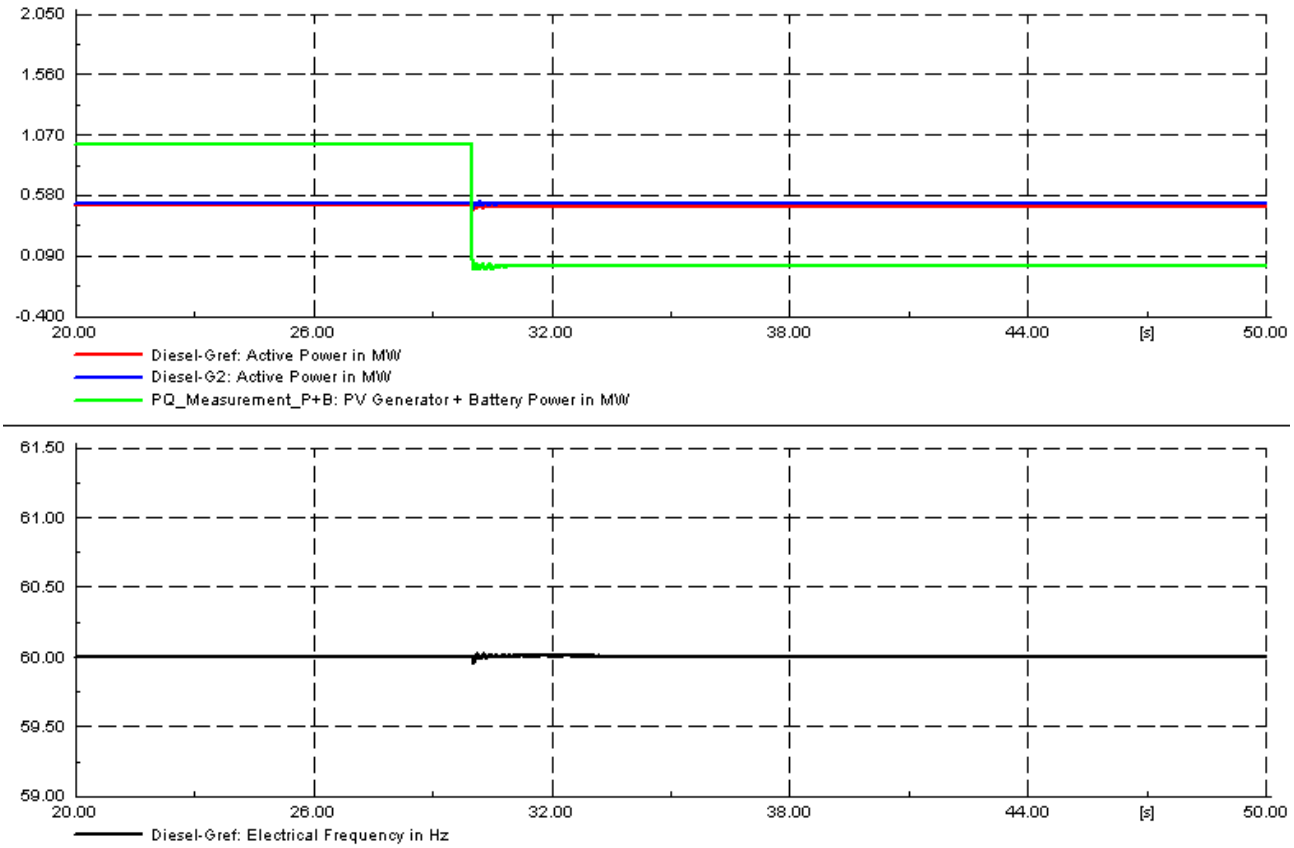

The same simulation is repeated with the frequency feedback mode of the battery controller enabled (Figure 45). The simulation results are identical to the results without battery support because the frequency is unchanged in the case of load reduction.

Figure 46 - Simulation 3: load reduction supported by the PV power feedforward control mode of the battery

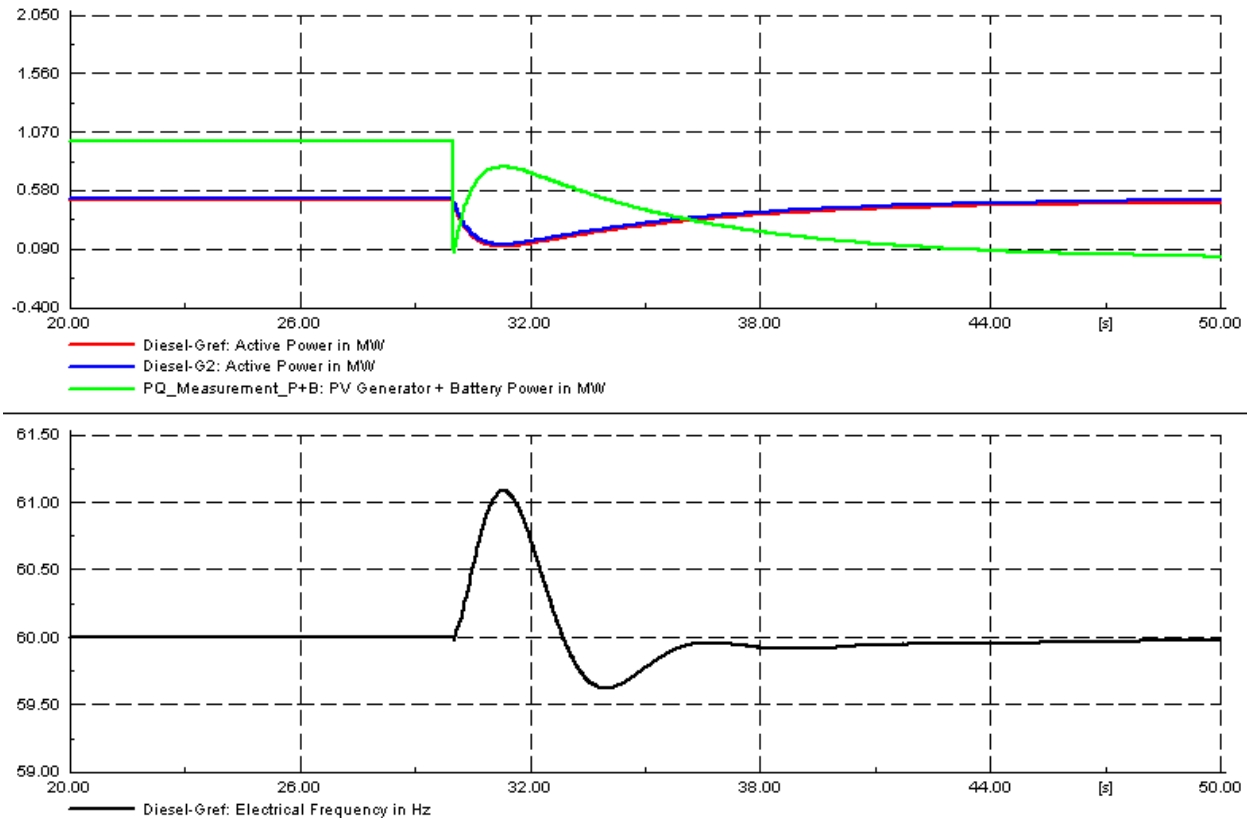

The same simulation is repeated again with the PV power feedforward mode of the battery controller enabled (Figure 46). The feedforward mode has only negative effect on stabilizing the micro grid frequency in this case. The central dispatch controller tries to step down the PV output instantly when the load reduces its demand, but the battery controller slows down the power reduction. Rather than a step, the rectified PV power, shown as the "PV generator + Battery power" curve, decays slowly following the pre-defined wave shape of the LPF. The over generated energy

from the battery is absorbed by the diesel generators, which leads to the acceleration of the generator rotor and therefore the rise of grid frequency.

With the PV power feedforward control of the battery, the maximum frequency excursion is 1.1 Hz.

Figure 47 - Simulation 4: load reduction supported by both the PV power feedforward control mode and the frequency feedback control mode of the battery

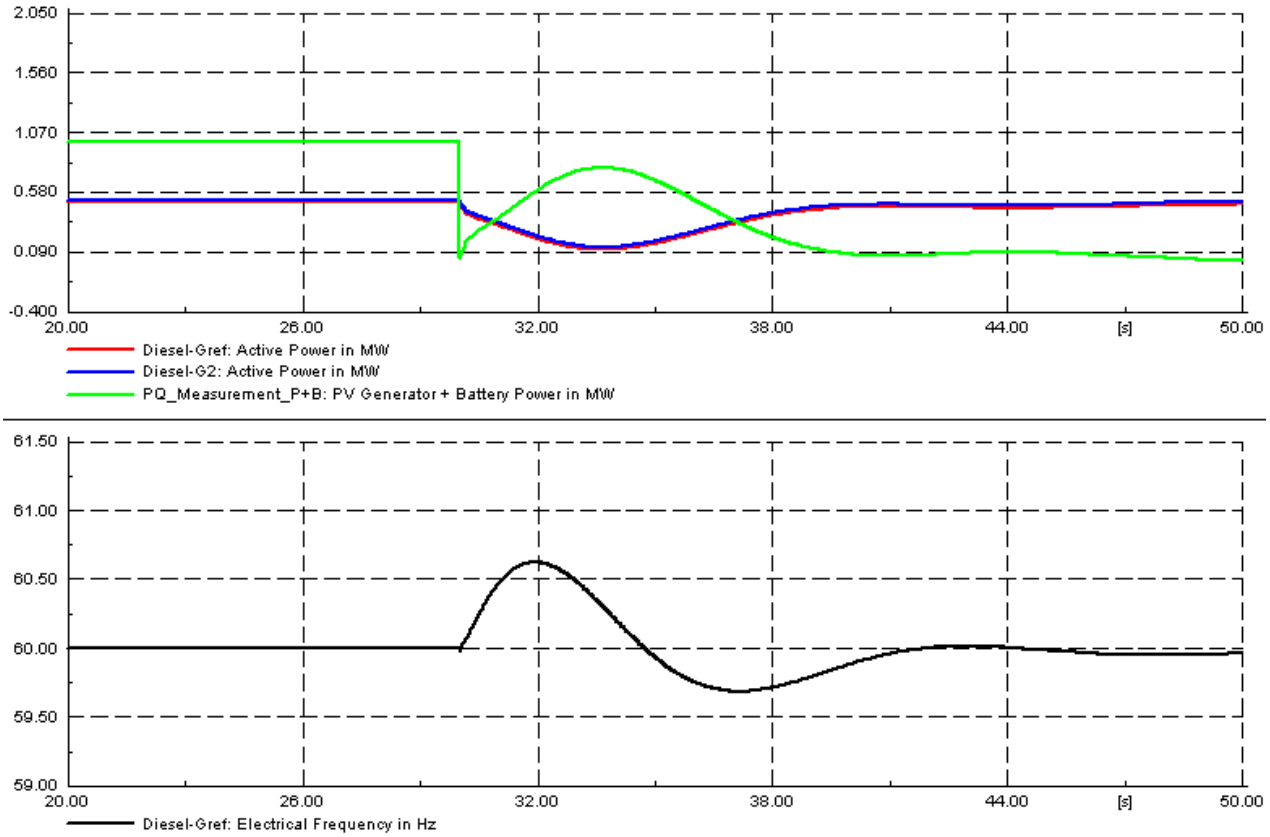

The last simulation combines both the feedback and the feedforward control mode of the battery (Figure 47). The frequency feedback control mitigates the frequency rise caused by the power feedforward control. Consequently, the frequency excursion in this simulation is smaller than in the feedforward simulation. In the case of load reduction, the PV power feedforward control has only negative effect on frequency stabilization, and the combined effect of the two control modes is still negative.

Some logic that detects the disturbance caused by demand reduction can be applied here to disable the PV power feedforward mode temporarily to avoid this side effect. The thesis suggest to use an AND logic to disable the power feedforward mode. The mode is disabled when the measured frequency is 1) not below 60 Hz AND 2) the PV output is not rising. The 60 Hz threshold can tell the case of over generation from over load. The rising edge trigger can tell whether the over generation is caused by demand reduction or PV generation increase. The power feedforward mode should only be disabled in the demand reduction case.

With both control modes enabled, the maximum frequency excursion is 0.6 Hz.

5.3. Case 3: PV output increase

Figure 48 - Simulation 1: PV output increase without the battery support

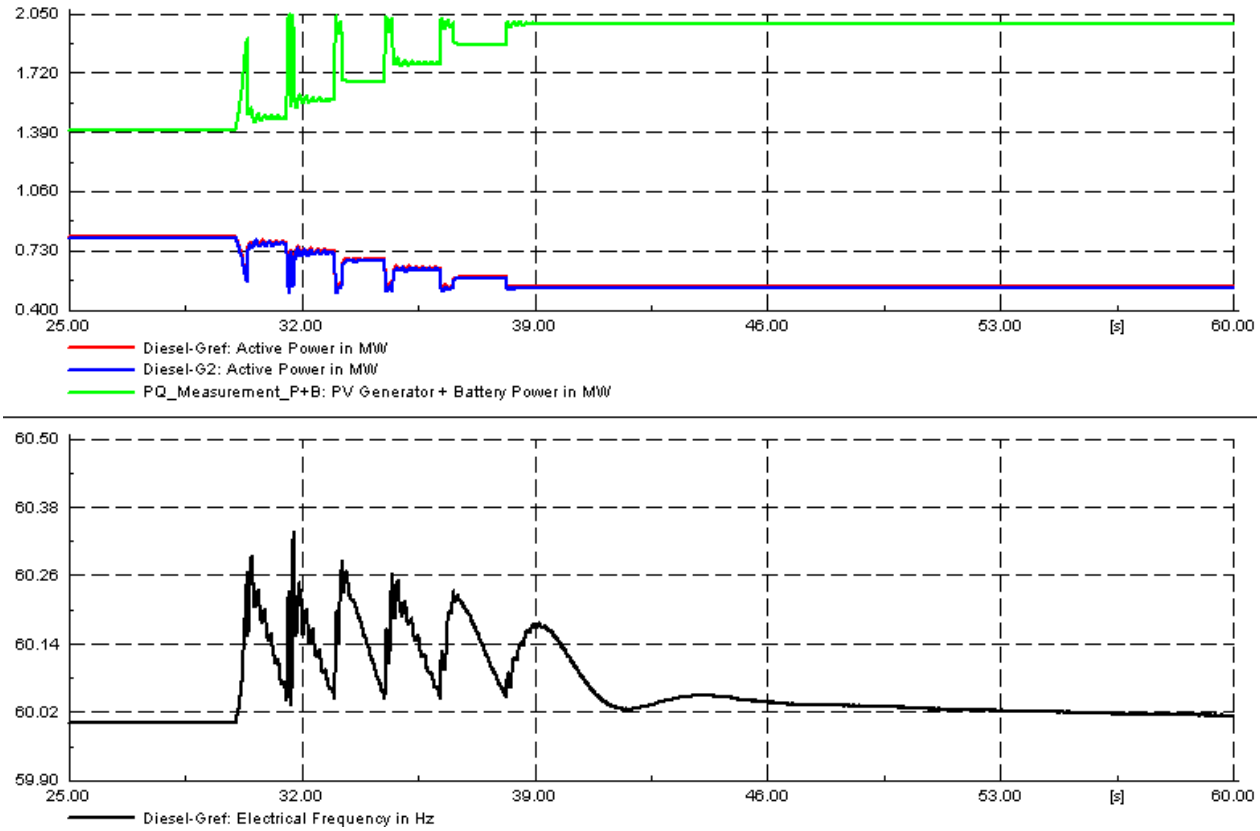

In this case, the 3MW active load is supplied by the PV generator of 1.4MW and the diesel generator of 1.6MW initially. Then the output steps up to its rated power 2MW due to the sudden increase of

solar irradiation at 30sec (Figure 48). The micro grid is dealing with excessive energy generated by PV. Ideally the PV generator should remain its rated power, and diesel generators decrease the output power to reduce the diesel consumption. However, the power reduction of diesel generators cannot be achieved instantaneously by the slow responding regulator. As a result, the diesel generators absorb the over generated energy from PV and accelerates the rotor. Without the existence of the battery, the frequency rise is taken care of by the repetitive operation of the over frequency protection of PV. The PV generator has an inbuilt over frequency power reduction that is set to engage at 60.2Hz and disengages at 60.05Hz. The protection is triggered multiple times during the disturbance. Triggering the protection reduces the PV output power and recovers the micro grid frequency, which disengages the protection. However, the frequency rises again at the instant of the protection disengaging. The protection repeats the on/off actions to stabilize the grid frequency until the output of the diesel generators are fully down regulated. The on/off actions of the PV protection produce the saw tooth frequency waveform.

Without the support of the battery, the maximum frequency excursion is 0.3 Hz, and the over frequency protection is triggered 6 times.

Figure 49 - Simulation 2: PV output increase supported by the frequency feedback control mode of the battery

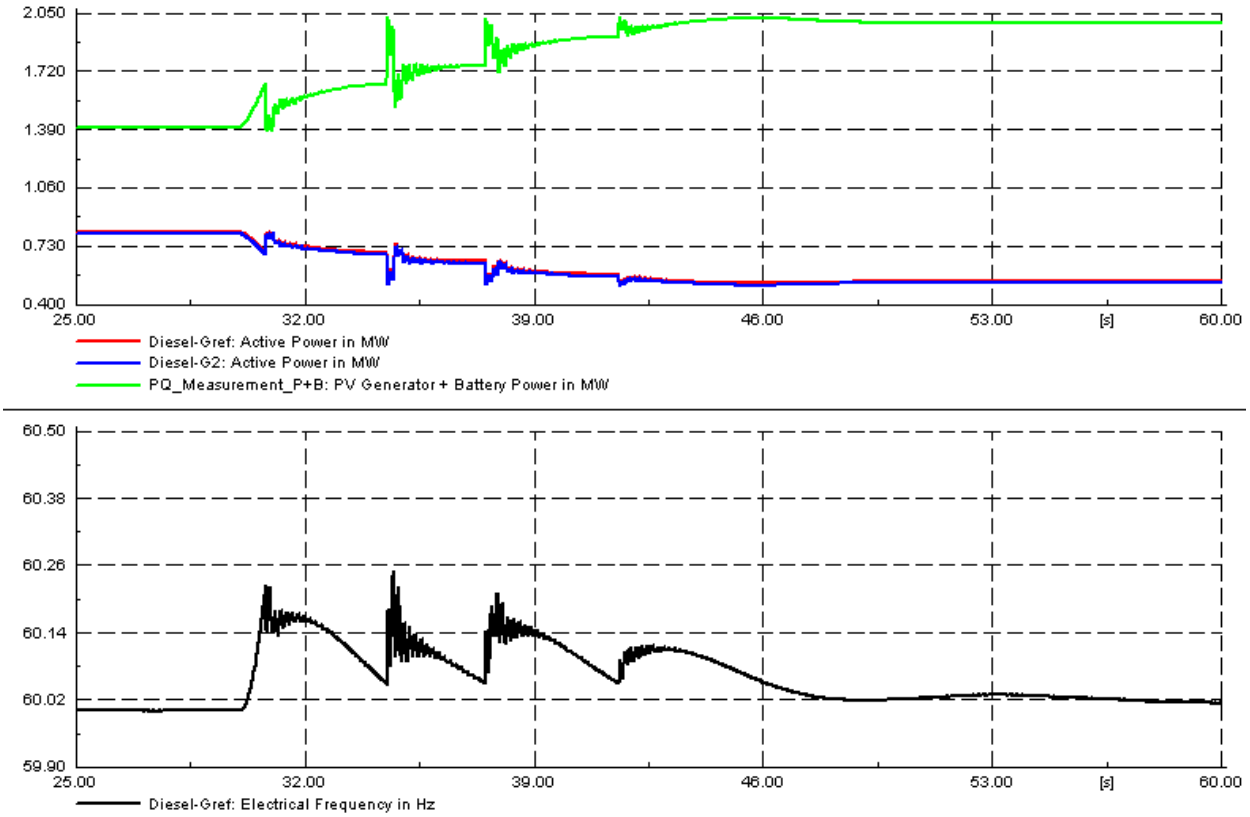

The same simulation is repeated with the frequency feedback mode of the battery controller enabled (Figure 49). The battery provides additional power proportional to the frequency derivative in order to counteract the disturbance. The "PV generator + Battery power" curve is the summation of PV and battery active power output. The rectified PV power, yet containing discontinuity, becomes smoother than without the battery support. This time the action of PV protection is less frequent. The frequency feedback control mode cooperates with the PV protection to stabilize the micro grid.

With the frequency feedback control of the battery, the maximum frequency excursion is 0.2 Hz, and the over frequency protection is triggered 6 times.

Figure 50 - Simulation 3: PV output increase supported by the PV power feedforward control mode of the battery

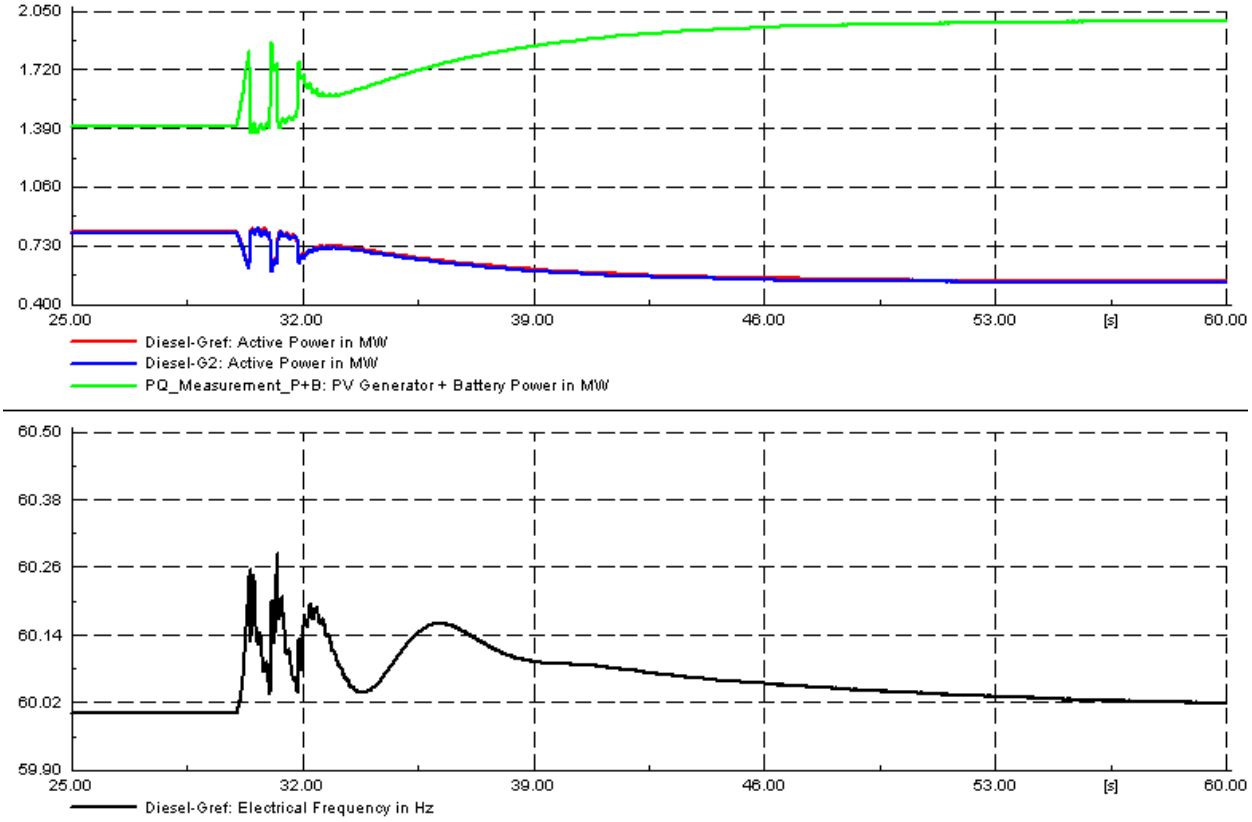

The same simulation is repeated again with the PV power feedforward mode of the battery controller enabled (Figure 50). This mode measures the active power output at the PV terminal and smooth the PV output with the battery power. The rectified PV power, shown as the "PV generator + Battery power" curve, contains less and lower spikes compared to the curve without the battery support. The action of PV protection is also less frequent. The power feedforward control mode cooperates with the PV protection to stabilize the micro grid.

With the frequency feedback control of the battery, the maximum frequency excursion is 0.25 Hz, and the over frequency protection is triggered 3 times.

Figure 51 - Simulation 4: PV output increase supported by both the PV power feedforward control mode and the frequency feedback control mode of the battery

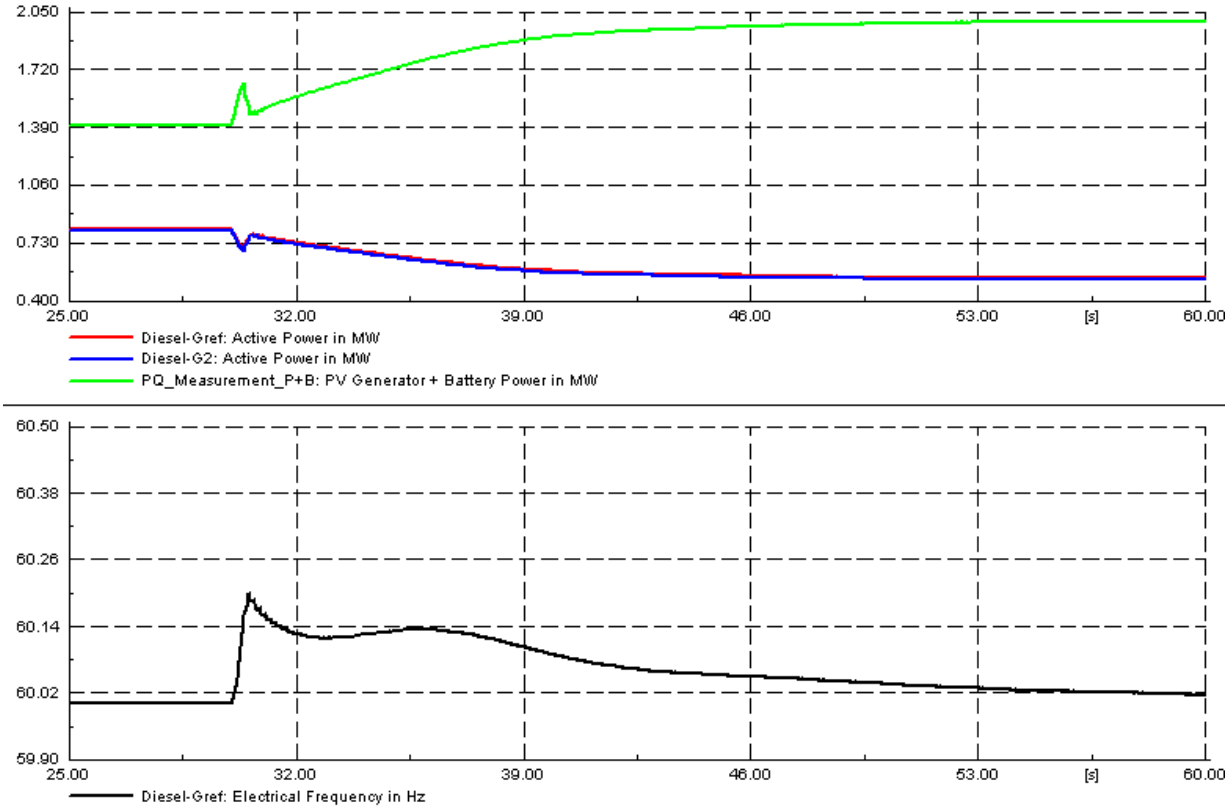

Both control modes act towards the same goal of reducing the actions of PV protection and the frequency overshoot. When both modes are enabled, it comes as no surprise that the rectified PV output is smoother than with either battery control mode alone (Figure 51). The control method of the battery achieves steady and smooth load transition from the diesel generators to the PV generator when there is a PV power increase.

With both control modes enabled, the maximum frequency excursion is 0.2 Hz, and the over frequency protection is not triggered.

5.4. Case 4: Load demand increase

Figure 52 - Simulation 1: load demand increase without the battery support

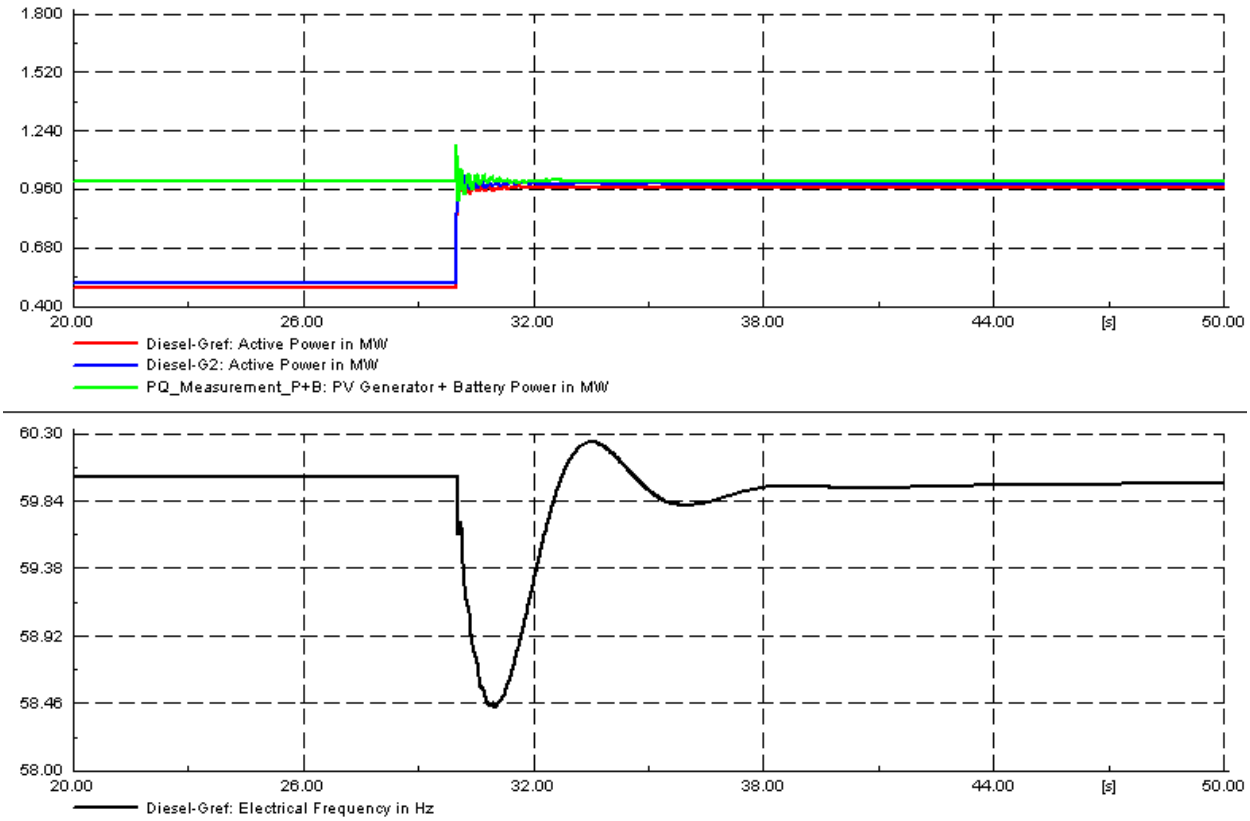

PV generator, whose output is limited by the solar irradiance level, is not able to increase its output power actively when the demand increases. All the extra loads have to be supplied by the diesel generators. In this case, the micro grid responses to a step up load transient. Initially the PV generator supplies 1MW and the each diesel generator supplies 0.5MW to a 2MW load. The load steps up by 1MW at 30sec and the generators' output step up instantaneously to supply the active power shortage (Figure 52). The frequency drops due to the kinetic energy consumed by the new load, and then recovers due to the control action of the frequency regulator of the diesel generators. This process is similar to the PV power step down transient, since there is no difference seen by the diesel generators whether the new load is resulted from the PV power reduction or load demand increase.

Without the support of the battery, the maximum frequency excursion is 1.6 Hz.

Figure 53 - Simulation 2: load demand increase supported by the frequency feedback control mode of the battery

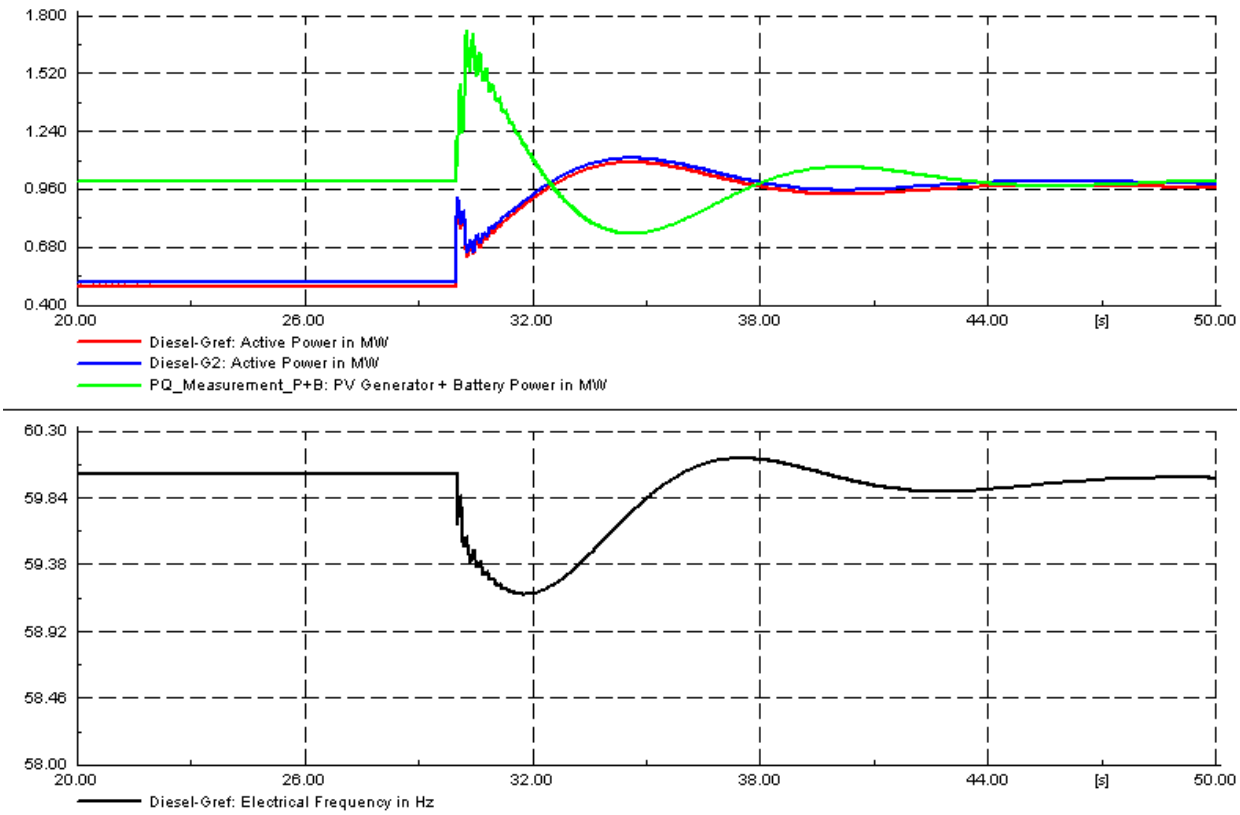

The same simulation is repeated with the frequency feedback mode of the battery controller enabled (Figure 53). Although the PV is not able generate extra power to feed the loads, the load can be supplied by the battery in transient proportional to the frequency derivative. The "PV generator + Battery power" curve is the summation of PV and battery active power output. The PV maintains constant output of 1MW, so the overshoot appeared in the waveform is the active power supplied by the battery. Consequently, the frequency excursion is smaller when a portion of the extra load is supplied by the battery instead of the kinetic energy reserve.

With the frequency feedback control of the battery, the maximum frequency excursion is 0.9 Hz.

Figure 54 - Simulation 3: load demand increase supported by the PV power feedforward control mode of the battery

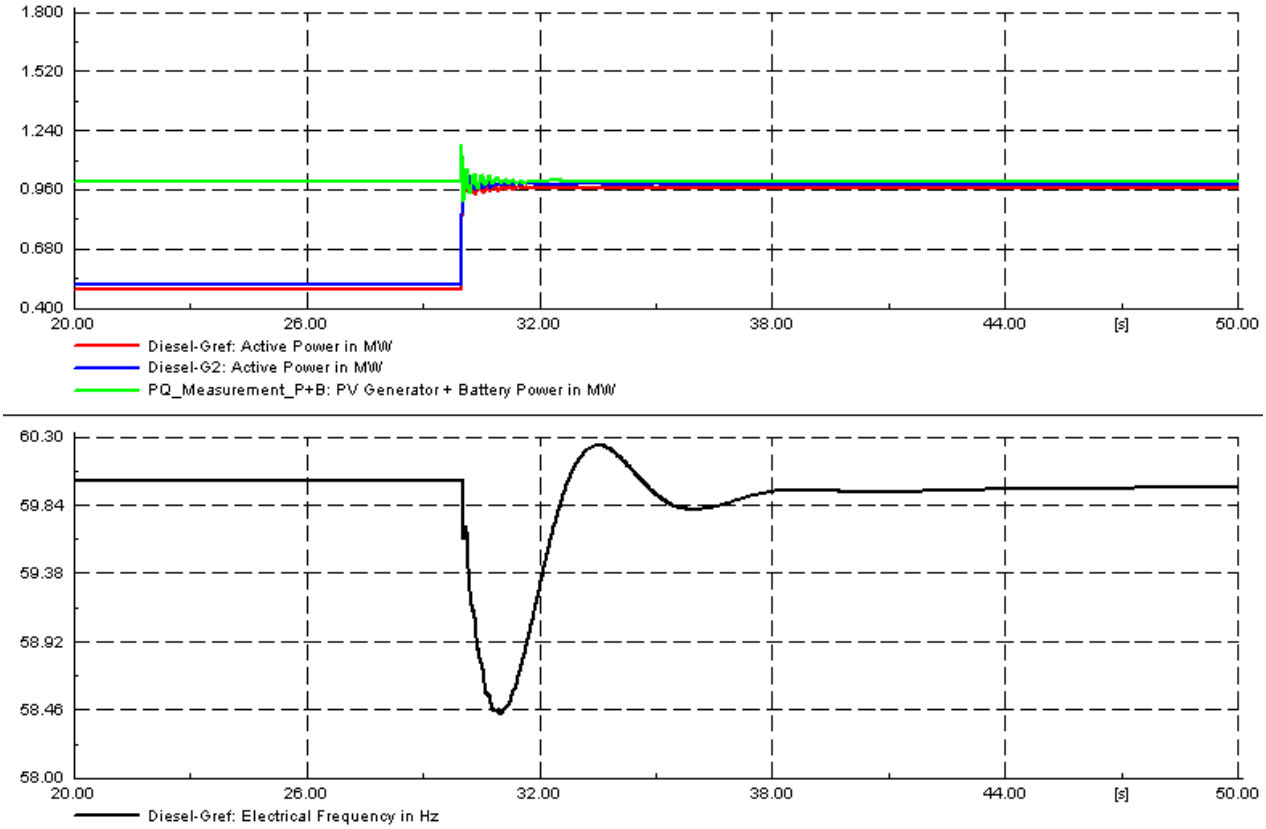

The same simulation is repeated again with the PV power feedforward mode of the battery controller enabled (Figure 54). This mode uses battery power to smooth the PV output, but the smoothing function does not make any contribution in this simulation since the PV output keeps unchanged. It can be seen that the simulation results with the PV power feedforward control mode identical to the results with no battery support.

With the PV power feedforward control of the battery, the maximum frequency excursion is 1.6Hz.

Figure 55 - Simulation 4: load demand increase supported by both the PV power feedforward control mode and the frequency feedback control mode of the battery

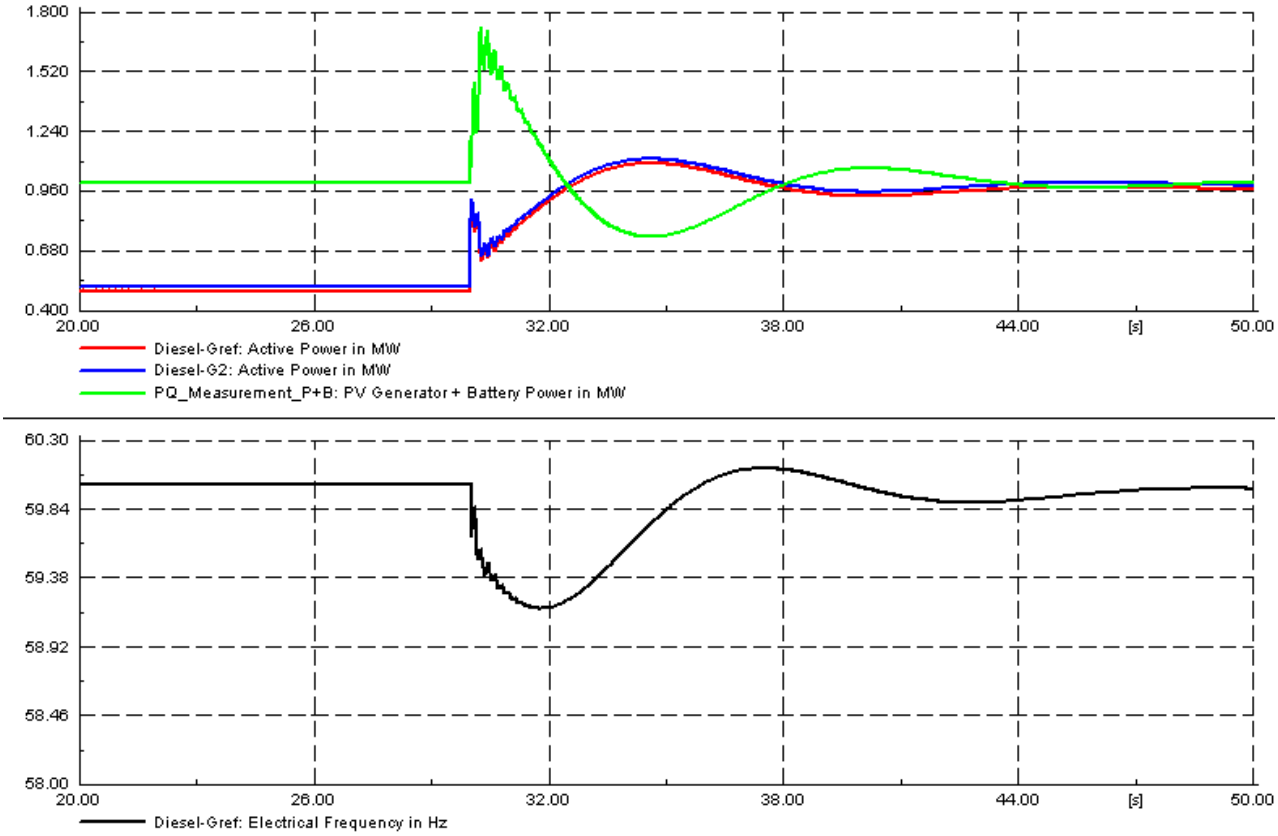

When both control modes are enabled, the frequency response is identical to the one simulated in the frequency feedback mode, because the power feedforward has no effect in improving the load transients in this simulation. However, the battery still effectively rejects disturbances only with the frequency feedback control mode.

With both control modes enabled, the maximum frequency excursion is 0.9 Hz.

5.5. Size of the battery

The size of the battery depends on the purpose it serves. Battery for storage purpose needs to supply the loads for hours in the absence of PV. As a result, the battery size has to be large. For the case of the thesis, the battery only responses to transient disturbances, therefore the battery size

could be much smaller compared to that for the storage purpose. The battery size for this particular purpose can be determined by the marginal test.

Figure 56 - Abnormal frequency withstand times from different generator manufactures [29] (permission granted for republication)

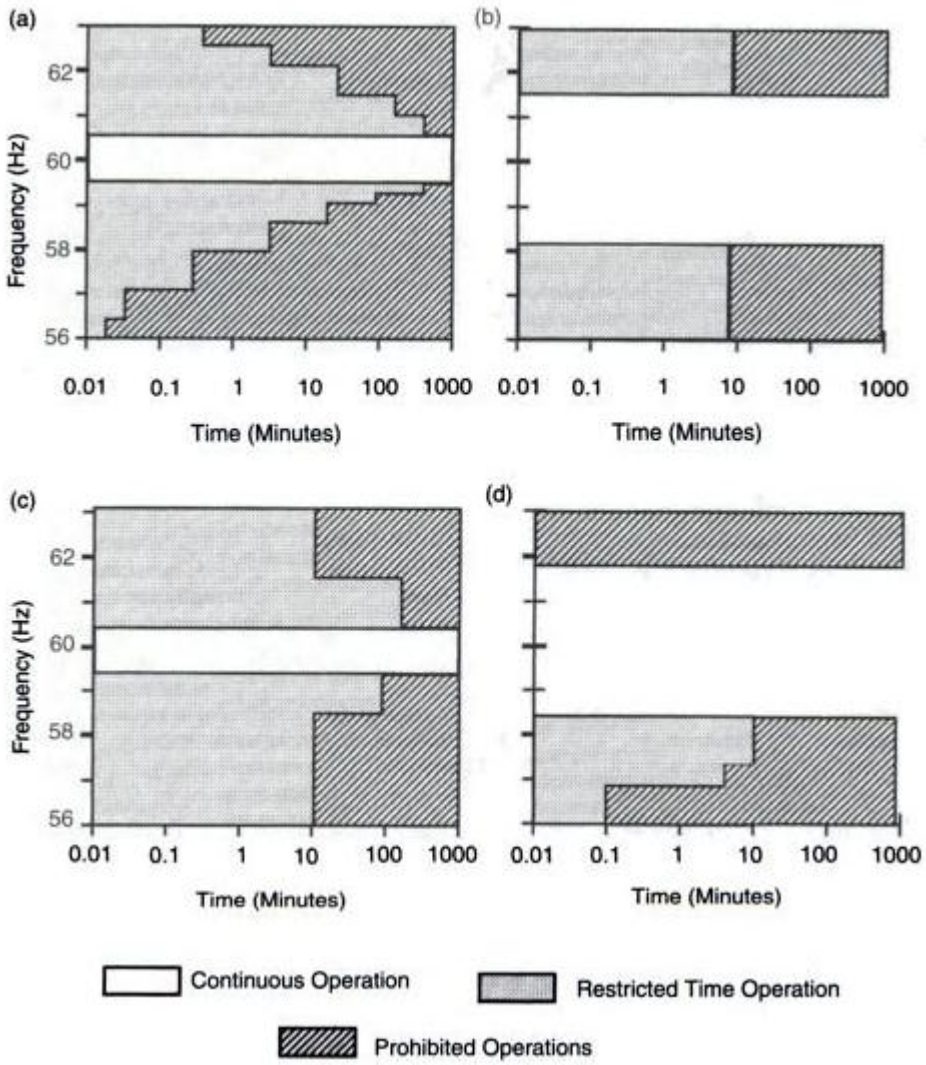

The battery control system has to keep the micro grid frequency within a specified range. Common types of load do not need to maintain a strict operating frequency, but the diesel generator does. Usually there is a standard to determine the generator's safe operational frequency range. The standard (Figure 56) specifies the generator lifetime for over and under frequency operation. The

withstand times shown are cumulative within the given frequency band. Exceeding the time limit would damage the generator. Taking Figure 56 (a) as example, if a generator operates in 61-61.5Hz band for 60 seconds, future operation in that frequency band must not exceed 30 seconds, provided that the total lifetime in that band is 90 seconds.[29] The generator still remains 100 percent lifetime in all other frequency bands. Operating above 63Hz or below 56Hz would be an instant trip. The data is usually provided by the manufacturers and varies with different types of generator. If we have (b) or (d) type generators in the grid, moderate frequency excursion won't shorten the lifetime. If dealing with (a) or (c) type, we need to set a more strict limit on permissible frequency excursion.

For the case described in the thesis, the battery storage should be large enough to keep the micro grid frequency not lower than the preset limit in the event that the PV generator at full power suddenly steps down to zero. This is a quite practical case caused by the cloud completely blocking the sunlight. The frequency upper limit is not quite a concern in determining the storage size since the over frequency excursion can be taken care of by the inbuilt PV power reduction.

Figure 57 - Battery output curve in p.u. in the case of suddenly losing 2MW PV generator (2MW base)

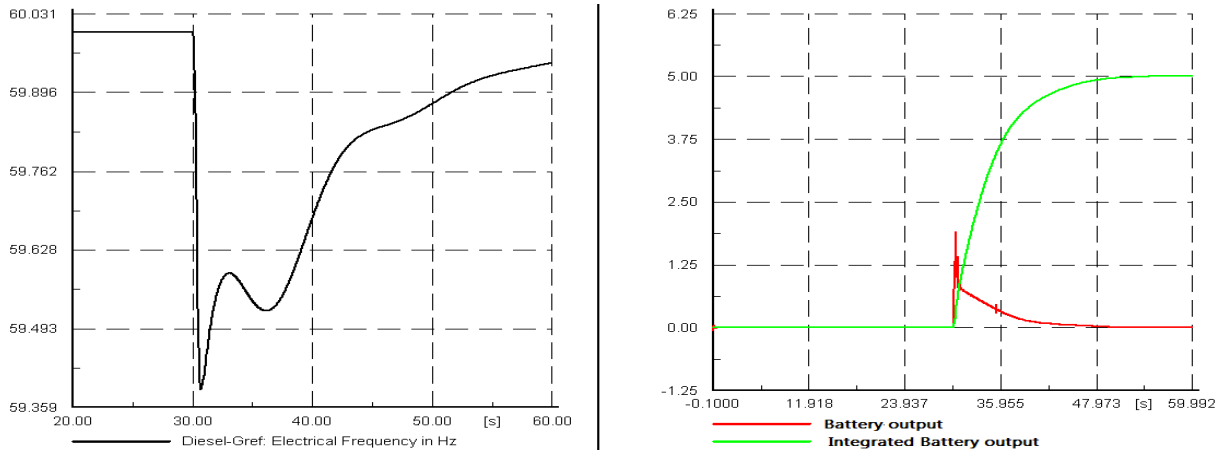

In Figure 57, it is an example of how the battery specifications are determined by the worst case simulation, which is suddenly losing the PV power supply at 2MW rated power. The simulation results indicate 1) the instantaneous Battery output is about 1.8 p.u. (3.6 MW), so we need to choose a battery inverter that is able to withstand this instantaneous output; 2) the required

battery size should be at least equal to the value of the accumulated battery output which is 10MW*sec; 3) the frequency is maintained above 59.3Hz with the battery support.

The simulation chooses the derivative gain K=0.5 and the time constant of the first order LPF T=5 for the battery controller. This parameter setting can keep the frequency excursion very small during a severe power disturbance. The performance is even acceptable for a very stringent frequency limitation like Figure 56(a). One can also try to adjust K and T to meet different design requirements. Both K and T are negatively correlated to the maximum frequency excursion, and positively correlated to the battery size and instantaneous output power. The relationship among T, K, the frequency excursion and the battery size is summarized in Table 6 and Table 7.

Table 6 - Micro grid frequency and battery response under a 2MW PV output reduction for different T values (K=0.5)

T	0.1	1	3	5	10
Max Grid Frequency Excursion (Hz)	1.7	1.3	0.7	0.6	0.6
Total Energy delivered by Battery (MW*sec)	1.8	3.2	6	10	20
Battery Max Instant Power (MW)	3.0	3.7	3.8	3.8	3.8

Table 7 - Grid frequency and battery response under a 2MW PV output reduction for different K values (T=5)

K	0.1	0.2	0.5	1	2
Max Grid Frequency Excursion (Hz)	1.1	0.9	0.6	0.6	0.6
Total Energy delivered by Battery (MW*sec)	10	10	10	10.6	10
Battery Max Instant Power (MW)	2.5	3.0	3.8	4.4	4.6

The result shows that the parameter T has more influence on determining the total energy delivered by the battery and K has more influence on determining the battery's maximum instantaneous power.

6. Conclusion

This thesis proposed a battery control method based on conventional frequency feedback control. The proposed method incorporates a reference model in the form of a low pass filter (LPF). It effectively damps the active power disturbances in the stand-alone hybrid micro grid. Moreover, it is particular effective in rejecting disturbances introduced by the non-deterministic output power of a PV generator.

The proposed controller has two control modes: one is the frequency feedback mode that differentiates the measured frequency; the other is the PV power feed-forward mode that filters the PV generator's output. Each control mode shows its own advantage in different tests in terms of stabilizing the grid frequency. Table 8 summarizes the contribution of each control mode under various types of disturbances.

It shows that the overall performance of the proposed control architecture is superior in suppressing frequency disturbances in comparison to the conventional frequency feedback control only.

With strengthened micro grid frequency stability, not only higher PV penetration level is allowed, but also could the diesel generators be provided with more margin of time to regulate their output for better diesel efficiency.

The battery size required for this control mode is much smaller comparing with the battery for long term storage purpose. The results provided in the thesis also indicates the combination of slow responding diesel generators and fast responding small battery are a good combination for stabilizing any type of distributed generator with highly volatile power output. It is also a cheaper solution than installing a large battery.

This report uses a first order LPF to smooth the PV output. Further researches may look into using other filters to replace the first order LPF for better performance.

Table 8 - The effect of different control modes under different disturbances

Disturbance type / control mode	PV output reduction	Load demand reduction	PV output increase	Load demand increase
Frequency derivative mode	reduce frequency excursion by 0.6Hz	reduce frequency excursion by 0Hz	reduce frequency excursion by 0.1Hz; frequency protection triggered 2 times less	reduce frequency excursion by 0.7Hz;
PV power feed forward mode	reduce frequency excursion by 0.7Hz	increase frequency excursion by 1.1Hz	reduce frequency excursion by 0.1Hz; frequency protection triggered 3 times less	reduce frequency excursion by 0Hz;
Both modes combined	reduce frequency excursion by 1.1Hz	increase frequency excursion by 0.6Hz	reduce frequency excursion by 0.1Hz; frequency protection triggered 6 times less	reduce frequency excursion by 0.7Hz;

Bibliography

[1] Canever, D., Dudgeon, G. J. W., Massucco, S., McDonald, J. R., & Silvestro, F. (2001). Model validation and coordinated operation of a photovoltaic array and a diesel power plant for distributed generation. In *Power Engineering Society Summer Meeting, 2001* (Vol. 1, pp. 626-631). IEEE.

[2] Wu, G., Kodama, S., Ono, Y., & Monma, Y. (2012, November). A hybrid microgrid system including renewable power generations and energy storages for supplying both the DC and AC loads. In *Renewable Energy Research and Applications (ICRERA), 2012 International Conference on* (pp. 1-5). IEEE.

[3] Kroposki, B., Lasseter, R., Ise, T., Morozumi, S., Papatlianassiou, S., & Hatziargyriou, N. (2008). Making microgrids work. *Power and Energy Magazine, IEEE*, *6*(3), 40-53.

[4] Divya, K. C., & Østergaard, J. (2009). Battery energy storage technology for power systems—An overview. *Electric Power Systems Research* (pp. 511-520).

[5] Jeevan, A. (2013). Microgrid inverter operation in three phase grid-connected and disconnected modes. *International Journal of Engineering Science*, *5*(11), 1817. Retrieved from http://www.ijest.info/docs/IJEST13-05-11-056.pdf

[6] Ashari, M., & Nayar, C. V. (1999). An optimum dispatch strategy using set points for a photovoltaic (PV)–diesel–battery hybrid power system. *Solar Energy*, 66(1), 1-9.

[7] *Digsilent product overview*. (2013). Retrieved from http://www.digsilent.de/index.php/products-powerfactory-overview.html

[8] Kundur, P. (1994). *Power system stability and control*. (pp. 582-600 & pp. 533-539). California: McGraw-Hill,Inc.

[9] Idlbi, B. (2012). *Dynamic simulation of a pv-diesel-battery hybrid micro grid for off grid electricity supply*. (Master's thesis).

[10] Manwell, J. F., Stein, W. A., Rogers, A., & McGowan, J. G. (1992). An investigation of variable speed operation of diesel generators in hybrid energy systems. *Renewable energy*, *2*(6), 563-571.

[11] Machowski, J., Bialek, J., & Bumby, J. (2011). *Power system dynamics: stability and control*. (pp. 170-172). John Wiley & Sons.

[12] Donald, F., & Beaty, H. (1978). *Standard handbook for electrical engineers*. (11th ed., pp. 16.15-16.21). New York: McGraw-Hill,Inc.

[13] De Brabandere, K., Bolsens, B., Van den Keybus, J., Woyte, A., Driesen, J., & Belmans, R. (2007). A voltage and frequency droop control method for parallel inverters. *Power Electronics, IEEE Transactions* on, *22*(4), 1107-1115.

[14] *Droop control*. (n.d.). Retrieved from http://www.openelectrical.org/wiki/index.php?title=Droop_Control

[15] Torres, M., & Lopes, L. A. (2009). Virtual synchronous generator control in autonomous wind-diesel power systems. In *Electrical Power & Energy Conference (EPEC), 2009 IEEE* (pp. 1-6). IEEE.

[16] Sakimoto, K., Miura, Y., & Ise, T. (2011, May). Stabilization of a power system with a distributed generator by a Virtual Synchronous Generator function. In *Power Electronics and ECCE Asia (ICPE & ECCE), 2011 IEEE 8th International Conference on* (pp. 1498-1505). IEEE.

[17] Zhong, Q. C., & Weiss, G. (2009, March). Static synchronous generators for distributed generation and renewable energy. In *Power Systems Conference and Exposition, 2009. PSCE'09. IEEE/PES* (pp. 1-6). IEEE.

[18] Van Wesenbeeck, M. P. N., De Haan, S. W. H., Varela, P., & Visscher, K. (2009, June). Grid tied converter with virtual kinetic storage. In PowerTech, *2009 IEEE Bucharest* (pp. 1-7). IEEE.

[19] Sedaghat, B., Jalilvand, A., & Noroozian, R. (2012). Design of a multilevel control strategy for integration of stand-alone wind/diesel system. *International Journal of Electrical Power & Energy Systems*, 35(1), (pp. 123-137).

[20] Chapman, S. J. (2005). *Chapman, s. j. (2004). electric machinery fundamentals*. (4th ed., p. 277). McGraw-Hill,Inc.

[21] Hiskens, I. A., & Fleming, E. M. (2008, June). Control of inverter-connected sources in autonomous microgrids. In *American Control Conference, 2008* (pp. 586-590). IEEE.

[22] *feedforward control*. (2013). Informally published manuscript, Ben Gurion University, Retrieved from http://www.bgu.ac.il/chem_eng/pages/Courses/oren courses/Chapter_9.pdf

[23] Jerkovic, V., Miklosevic, K., & Zeljko, S. *Excitation system models of synchronous generator*. Informally published manuscript, Faculy of Electrical Engineering Osijek, Croatia, Retrieved from http://bib.irb.hr/datoteka/475822.Final_paper_-_SiP2010_Jerkovic.pdf

[24] Schaefer, R., & McMullen, S., & Rao, P. (2012). The effect of reactive compensators and coordination with Volts/Hertz limiting. *Pulp and Paper Industry Technical Conference (PPIC), Conference Record of 2012 Annual IEEE* (pp. 123-137). IEEE

[25] Basler Electric Company. *Voltage regulator and parallel operation*. Retrieved from http://www.basler.com/downloads/VR_parallel.pdf

[26] Digsilent powerfactory PV model: Schneider context xc 80KVA 1.5

[27] Machowski, J., Bialek, J. W., & Bumby, J. R. (1997). *Power System Dynamics*. (p. 341). Jhone Wiley and Sons,.

[28] *Generator set power factor explained*. (2011, March). Retrieved from http://www.fgwilson.ie/assets/files/technical_papers/generator-set-power-factor-explained.pdf

[29] Reimert, D. (2010). *Protective relaying for power generation systems*. (p. 240). CRC Press.

Appendices

Appendix A: Generator datasheet

MarelliGenerators®

THREE PHASE SYNCRONOUS GENERATOR

MJH 400 LB4

CONTINUOUS DUTY

4 poles
50 Hz - 1500 rpm

AMBIENT TEMPERATURE	**40°C**		Number of leads	**6**
INSULATION CLASS	**F**	**WINDING DATA**	Winding pitch	**5/6**
POWER FACTOR	**0,8**			

TEMPERATURE RISE		**105/40 cl.F**	**80/40 cl.B**
VOLTAGE Star	**V**	**3000**	
RATING	**kVA**	**1020**	**890**
	kW	***816***	***712***
EFFICIENCY [%] @ 0,8 p.f.	**4/4**	94,9	94,8
	3/4	94,9	94,8
	2/4	94,5	94,3
EFFICIENCY [%] @ 1 p.f.	**4/4**	96,0	95,9
	3/4	96,0	95,9
	2/4	95,7	95,5
SHORT CIRCUIT RATIO	SCR	0,56	0,64
REACTANCES [%]			
Direct axis synchronous	Xd	225	196
Quadrature axis synchronous	Xq	122	106
Direct axis transient	X'd	20,0	17,5
Direct axis subtransient	X"d	9,0	7,9
Quadrature axis subtransient	X"q	10,0	8,7
Negative sequence	X_2	9,0	7,9
Zero sequence	X_0	2,4	2,1
TIME CONSTANTS [s]			
Open circuit	T'do	2,43	
Transient	T'd	0,19	
Subtransient	T"d	0,016	
Armature	T_a	0,025	

MECHANICAL CHARACTERISTICS

D-end bearing/Lubrication		6324 C3 / With grease nipple
N-end bearing/Lubrication		6318 Z C3 / Prelubricated
Overspeed [r.p.m.]		2250
Inertia (J) [kgm2]	Refer to B34 construction	20
Weight [kg]	Refer to B34 construction	3000
Method of cooling		IC01
Cooling air required [m3/s]		1,30
Degree of protection		IP23
Types of construction available		B2 (SAE) - IM B34 - IM B20
Direction of rotation (Standard)		CW

OTHER DATA

Overloads	10% for 1 hour every 12 hours
3-phase short circuit sustained current	≥ 300 % (3 In) with VARICOMP device
Voltage regulation accuracy	± 1% In steady state condition
Radio interference	EN 55011 - Class B Group 1
Wave form THF	< 5%
Total harmonic content	< 3% - At no load

STANDARDS

IEC 60034-1; CEI 2-3; BS 4999-5000; VDE 0530; NF 51-100,111; OVE M-10, NEMA MG 1.22.