VULNERABILITY AND RISK ANALYSIS OF THE GUADELOUPE ISLAND FOR DISASTER SCENARIOS USING THE MODIFIED I2SIM TOOLBOX

by

Justin Wang

B.A.Sc., The University of British Columbia, 2010

A THESIS SUBMITTED IN PARTIAL FULFILLMENT OF
THE REQUIREMENTS FOR THE DEGREE OF

MASTER OF APPLIED SCIENCE

in

The Faculty of Graduate Studies

(Electrical and Computer Engineering)

THE UNIVERSITY OF BRITISH COLUMBIA

(Vancouver)

January 2013

Abstract

Relationships between system components can be simple but interdependencies among different systems can sometimes be complex. Interdependencies among systems are the purpose of the I2Sim simulator developed by Dr. José R Martí and the UBC Power Group. As part of this thesis, the I2Sim simulator is used to conduct vulnerabilities and risks analysis for two different test cases in the event of a disaster: The Sendai case in Japan and the Guadeloupe Island case in the French West Indies. The two study cases are part of two separate projects: the DR-NEP project and the MATRIX project, respectively.

With the completion of the Sendai study case there was a need to modify the I2Sim toolbox in order to increase its robustness and the flexibilities of its components. A major part of this thesis is the modification of the channel cell and the storage cell in the I2Sim toolbox.

The Guadeloupe Island test case is part of a collaborative effort with BRGM of France. In order to define a disaster scenario that is meaningful and realistic we adopted the ARMAGEDOM methodology to determine the magnitude of the earthquake and the effect it had on different areas of the Island. Damage data for infrastructures as well as affected population are generated according to the approach outlined in the RISK-UE project. Combined with data collected through publications the I2Sim model of the Guadeloupe Island was constructed. By running different simulations for different evacuation policies and resource distributions the interdependencies between different systems were revealed. The study also found the vulnerable points in the system and the results are used for risks analysis and assessments for other parts of the project.

Table of Contents

List of Tables

List of Figures

Acknowledgements

This thesis would not have been possible without the help and guidance of many individuals. At the top of that list is my supervisor José R Martí to whom I want to give my sincere gratitude for his mentorship and for giving me the opportunity to work on many interesting projects. He also challenged me to think outside the realm of a typical electrical engineer and broadened my knowledge in many aspects of the industry. I feel very grateful to have been under his supervision. I also want to thank Professor K.D. Srivastava and Dr. Hermann W. Dommel for taking the time to be part of my examination committee. Even though my interaction with Professor Srivastava has been limited, I have always enjoyed the lively topics he brings to our weekly meetings and his knowledge of the industry is greatly appreciated.

I am also very thankful for my colleagues who have helped me with my work: Tiange Wang, for working with me on the Sendai Japan model that he constructed; César López, for helping me with all my questions regarding the programming of the I2Sim toolbox; Hugón Juárez and Yukari Iwasa, for their contribution to the Japan study case; Dr. Paul Lusina, for his great project management skills which allowed the projects to be carried out smoothly; Nicolas Desramaut, for his collaborative work on the MATRIX project and for being an amazing host while I was in Orléans, France.

Next, I want to thank all my peers for making my time in the lab an unforgettable experience. Through the last two and half years I have become friends with many of them. I am amazed at how kind and gracious everyone has been to me and I feel very lucky to be in their company. I will remember and cherish all the wonderful memories and hope our friendships will continue in the future.

Above all I want to thank my parents for their unconditional love. Without them I would not be in Canada right now let alone have the opportunity to complete my Master's degree. I am eternally grateful for their sacrifices to provide a better life for me. Last but not least, I want to thank my wonderful girlfriend Pamela for supporting me through all these years and helping me to become a better person.

Dedicated to my parents

1 Introductions

1.1 Goal and Purpose

The main purpose of this thesis is to use the modified I2Sim toolbox to conduct disaster response studies in order to assess the impact of complex multiple disaster events as part of the MATRIX (Multi-Hazard and Multi-Risk Assessment Methods for Europe) project. The main testing site is the Guadeloupe Island in the French West Indies. The model is constructed using the Infrastructure Interdependencies Simulator (I2Sim) toolbox developed by the UBC Power Group team led by Dr. José R Martí. But first the thesis will investigate the historical event verification study performed on the recent disaster events in Sendai, Japan as part of the DR-NEP (Disaster Response Network Enabled Platform) project. In order to more accurately represent the interdependencies among different infrastructure networks, the channel and storage cells in the I2Sim toolbox were improved to add more functionality. Part of this thesis will focus on the development of these components and their application to the project. The following chapters will go into detail of the I2Sim simulator and how it will be used to create the model needed for the study.

1.2 Motivation

In the wake of major disasters across the world, from the earth quake in China and Haiti to the combined events of earthquake and tsunami in Japan, the importance of disaster planning and response cannot be over stated. Even though there have been much advancement in understanding natural disasters and predicting them, methods have not yet been developed to accurately forecasting disastrous events. Therefore the best way to prepare for a disaster is to understand the risks and consequences of such an event. Disaster planning and response are part of a bigger effort called emergency management. It is described as strategic management processes aimed at saving human lives and protect critical assets of an organization during a disaster or catastrophic event [1]. Once a good understand of the damages caused by a disaster is obtained, improvements for existing systems are needed to increase robustness and resiliency. Vulnerability studies are one of the most effective methods to detect the weak points in a system.

The European continent is subjected to a variety of natural disasters such as earthquakes, tsunamis, volcano eruptions, landslides, floods and storms. But the policy makers and scientists who study these events often treat them are separate, unrelated phenomena [3]. Doing so ignores the fact that these events are dependent on each other, and understanding how these events affect different systems allows the decision makers to reduce losses whether they are human lives or other critical assets. The island of Guadeloupe is used as a test case which is subjected to many natural disasters. It is crucial to understand the cascading effects of these events on the physical, social and functional system. The I2Sim toolbox allows us to accurately construct different physical systems and study their interdependencies.

2 Infrastructure Interdependencies Simulator (I2Sim)

2.1 I2Sim methodology

The Infrastructure Interdependencies Simulator (I2Sim) was created under the Joint Infrastructure Interdependencies Research Program (JIIRP) [5]. Due to the nature of increasing interconnections and interdependencies with today's infrastructures, it is very difficult to fully understand the relationships between all the systems. I2Sim provides a platform to represent all critical infrastructures and their operating interdependencies. Figure 1 shows a simple system containing a power station, a water station, a hospital and a residential area. The power station is distributing electricity to the hospital, water station and the residential area while the water station is distributing fresh water to the hospital and the residential area. Even though it is a simple system it is a system with feedback loops and certain interdependencies. Under normal operation it is easy to fulfill all the resource requirements for different infrastructures to function properly. It doesn't require significant coordination between systems because resources are abundant and operations are not time critical other than at the hospitals.

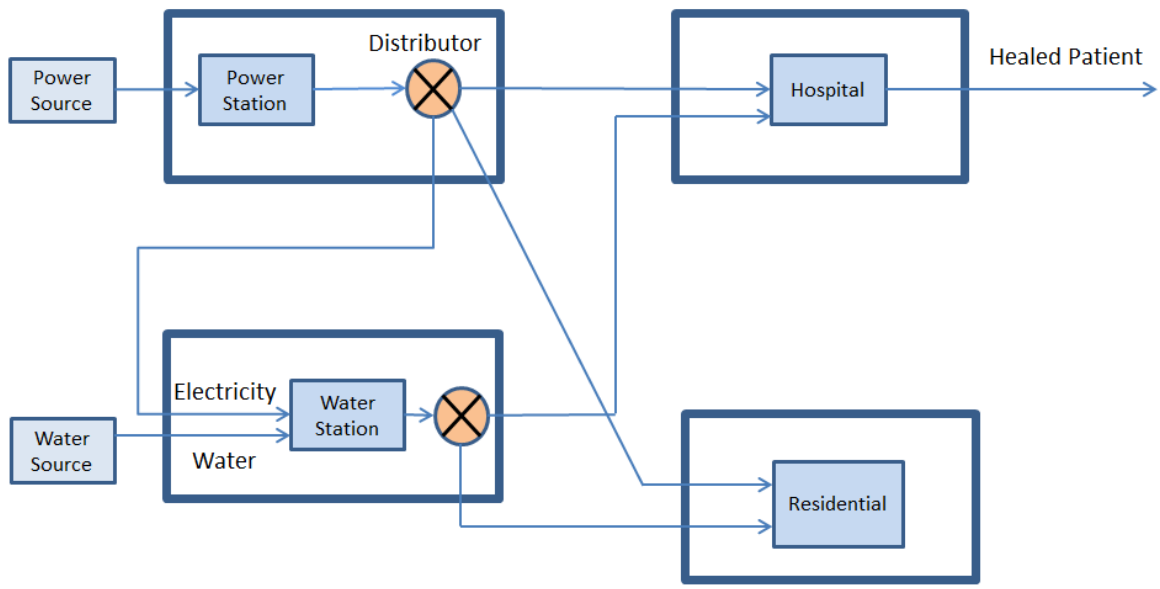

Figure 1. I2Sim Concept Model under Normal Operating Conditions

After a catastrophic event has happened many infrastructures are damaged and operating at lowered capacities. During these times resource allocation and response time are critical. Imagine a damaged system in figure 2 where the power station is operating at low capacity. With limited output the power plant operator needs to know how to distribute the electricity. The initial intuition is to first fulfill the need of the hospital because the number of patient will dramatically increase after a disaster. Doing so might cause several unforeseen circumstances. Fulfilling the hospital needs leads to insufficient supply to the water station which could result in lower amount of water being pumped out of the station to the hospital and residential area. This

might cause the hospital to operate at a lower capacity and therefore not being able to use the electricity it receives effectively. Similarly, if the water need at the residential area is not met it might cause people to become ill and therefore increasing the amount of patients at the hospital.

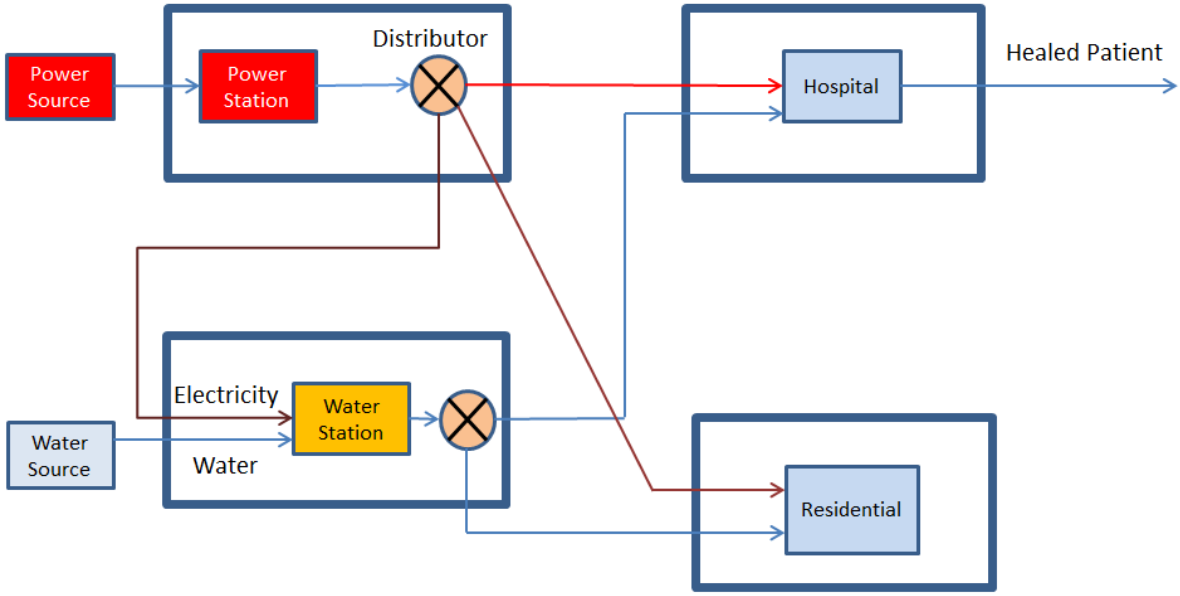

Figure 2. I2Sim Concept Model after Sustaining Damages

The simple scenario previously described only begins to show the complex interdependencies amount different systems. When an entire geographic area is under study the complexity grows exponentially and can no long be solved by common sense. I2Sim has the functionality to capture these relationship to discover vulnerabilities in the system and aids as a decision making tool for policy makers. The actual toolbox is described in the section below.

2.2 I2Sim Components Ontology

The I2Sim toolbox contains numerous components in order to successfully simulate different types of complex systems. These components can be categorized into the following groups based on functionalities [2]:

(1) Tokens represent resources or information transmitted between different infrastructures or units. For example, tokens can be the output power of an electric substation distributed to a hospital. In essence, tokens are all the inputs and outputs of systems modelled in I2Sim.
(2) Cells represent physical entities that contain specific functionalities such as a hospital or a power plant. The cells act as transfer functions that relate input tokens to output tokens.
(3) Channels provide means of transportation for tokens. The channel doesn't change the property of the token. Depending on the nature of the model a loss or delay factor can be implemented.

(4) Control elements such as the distributor are decision nodes in the model, allowing for resources allocation, and possess the ability to communicate with the decision layer.
(5) Visualization elements in I2Sim have the ability to probe any node in the model. This provides the ability to collect data for analysis and visualization.

2.3I2Sim Components Functionalities

The Infrastructure interdependencies simulator is implemented as a custom toolbox in MATLAB Simulink. The full library of components is show in figure 3. The library is divided into two categories: basic elements and visualization and control panel. The functionality of each block is described in the following section.

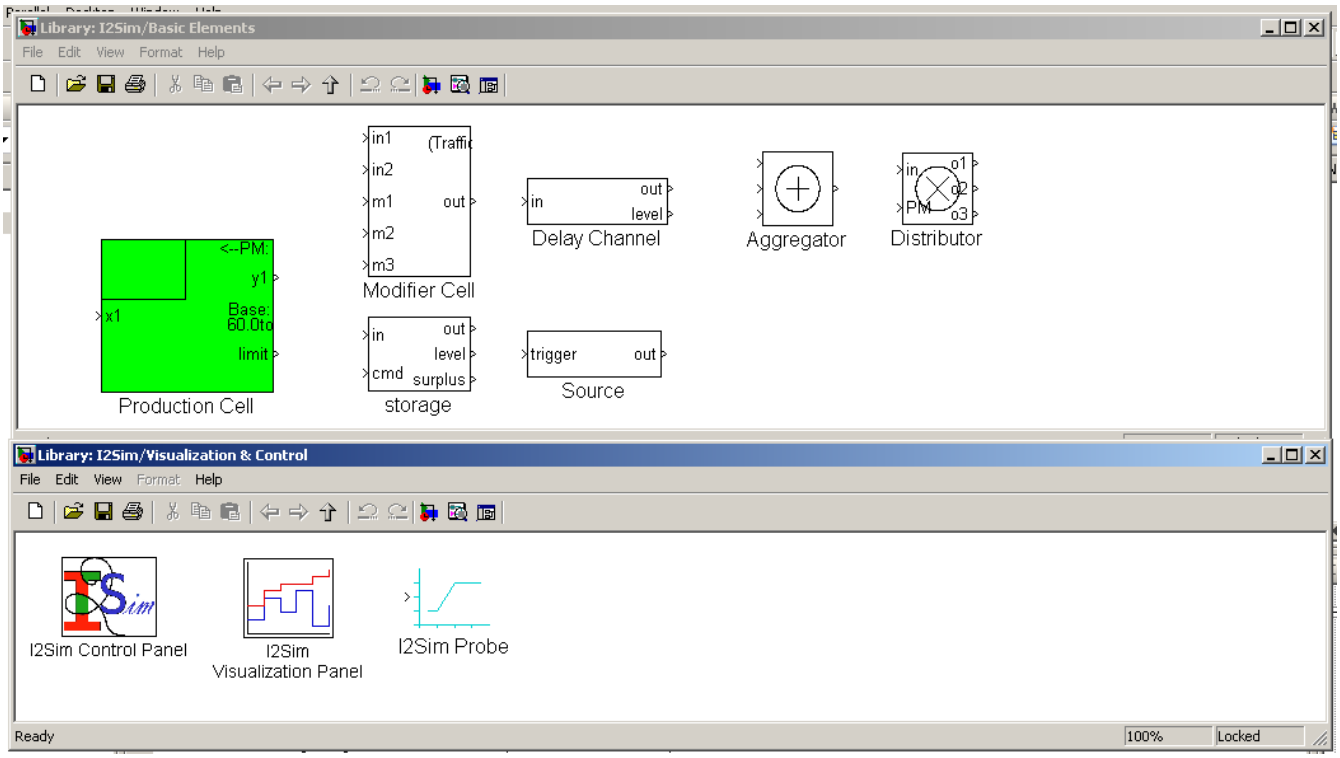

Figure 3. I2sim Library Shown in MATLAB Simulink

2.3.1 Production Cell

The Production Cell is the most important block in the I2Sim toolbox. Its function is to model all physical infrastructures. It receives in-coming tokens for processing and output the corresponding tokens. Figure 4 shows the Production Cell and its graphic user interface. Depending on the infrastructure being modeled the input and output can be the same type of tokens. For example, a substation's main input is electricity. The same electricity will appear in the output ready for distribution. On the other hand, in order to generate power a power station

will need inputs that are the sources of power which could be water, wind or nuclear fuel. In this case the input and output are completely different types of tokens. The Production Cell is able to relate any input to an output with the help of a Human Readable Table (HRT).

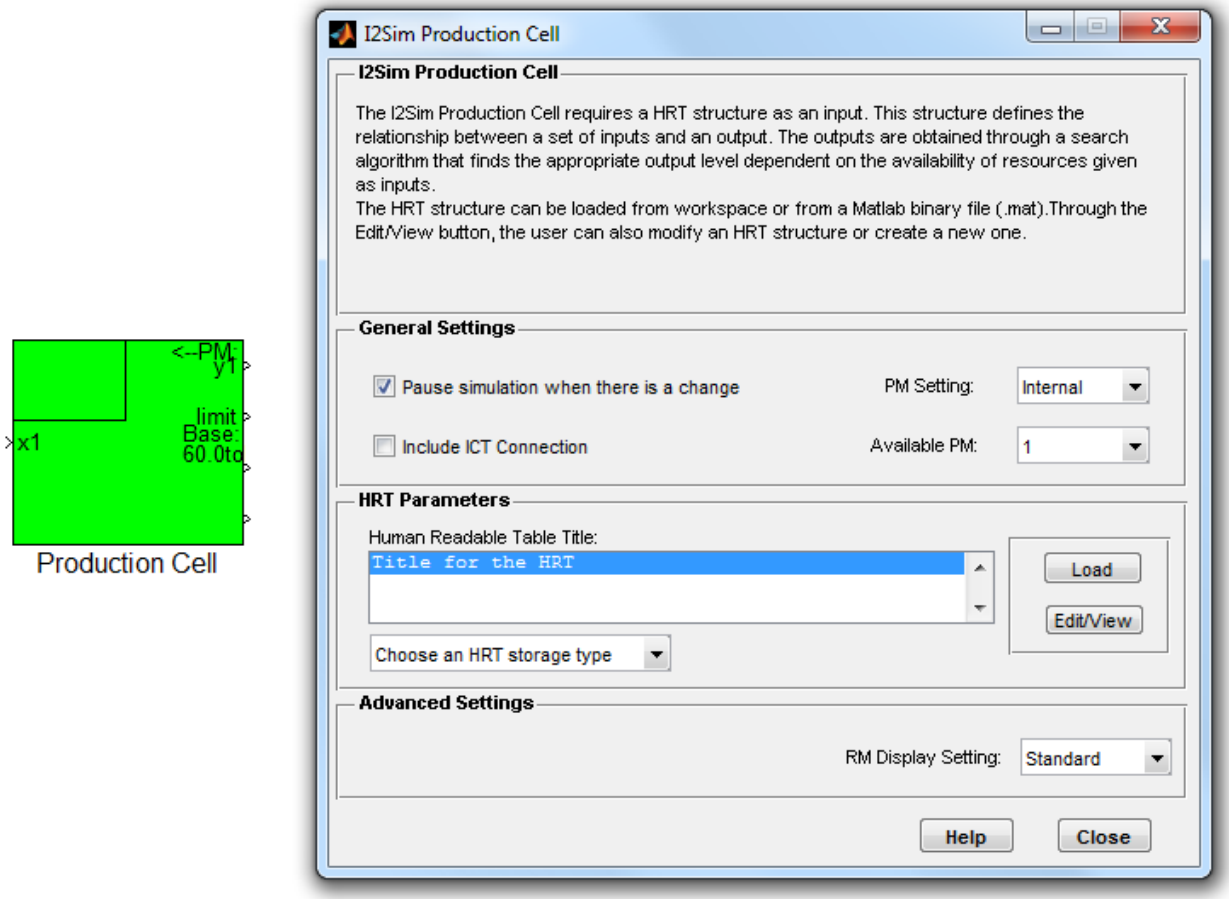

Figure 4. Production Cell Block and Graphic User Interface

2.3.1.1 Human Readable Table (HRT)

The Human Readable Table is a dynamic matrix that relates multiple inputs to a single output that can be describe by the equation:

$$Y_i = f_k(x_{i1}, x_{i2}, x_{i3} \dots . x_{ij})$$

The output Y_i for the row i is a function of all the inputs in that row. For any functional infrastructure the outputs are divided into five discrete levels from 100% capacity to 0% capacity. At the same time, inputs are also divided into five level ranging from 100% available resources to 0% resources in order to produce the correspond output. Table 1 shows an example of a HRT for a water station. It can be observed that in order to produce a certain amount of water for distribution two inputs are required: water from a source and electricity needed to operate the machines in the water station.

Water Output (KL/Hour)	Water Input (KL/Hour)	Electricity (MW)
65	68	20
49	51	15
32	34	10
16	17	5
0	0	0

Table 1. Human Readable Table for a Water Station

2.3.1.2 Physical Mode and Resource Mode

The concept of resource mode is derived from the operating nature of the Human Readable Table. A particular resource mode is reached depending on the status of the input resources. Therefore the number of resource mode is the number of input levels and thus number of rows in the HRT. An output level or resource mode is reached given sufficient levels for all the inputs. For example, to output 49 KL of water 51 KL of water and 15 KW of electricity are required as inputs. If one or more of the resource is lacking then it is not possible to operate at that particular row. This means the lacking resource will act as a limiting threshold for the output of the HRT. In table 2, it is shown that a water station has sufficient water to operate at the first row of the HRT. But due to insufficient electricity the water station is not able to successfully pump all the water through the station. Therefore the result is that the station is only able to operate at the third row of the HRT with electricity acts as a limiting factor. In this case the resource mode is 3.

Water Output (KL/Hour)	Water Input (KL/Hour)	Electricity (MW)
65	68	20
49	51	15
32	34	10
16	17	5
0	0	0

Table 2. HRT Resource Mode Concept

Physical Mode is derived in a similar fashion. Each physical infrastructure can be represented with five discrete different physical states ranging from 100% functional for no damages to 0% functional meaning the infrastructure has been completely destroyed. Each Physical Mode has its own associated HRT shown in table 3 for the water station example.

Physical Mode 1 (100% Functional)		
Water Output (KL/Hour)	Water Input (KL/Hour)	Electricity (MW)
65	68	20
49	51	15
32	34	10
16	17	5
0	0	0

Physical Mode 2 (75% Functional)		
Water Output (KL/Hour)	Water Input (KL/Hour)	Electricity (MW)
49	51	15
32	34	10
16	17	5
0	0	0

Physical Mode 3 (50% Functional)		
Water Output (KL/Hour)	Water Input (KL/Hour)	Electricity (MW)
32	34	10
16	17	5
0	0	0

Physical Mode 4 (25% Functional)		
Water Output (KL/Hour)	Water Input (KL/Hour)	Electricity (MW)
16	17	5
0	0	0

Physical Mode 5 (0% Functional)		
Water Output (KL/Hour)	Water Input (KL/Hour)	Electricity (MW)
0	0	0

Table 3. Physical Mode with associated HRTs

As functionality decreases, the productivity decreases and this is reflected in the HRTs. In physical mode 1, the water station is able to produce 65KL of water per hour for maximum productivity. But as physical mode increases the water station is not able produce 65KL of water anymore due to physical damage and therefore the top row is removed because even if resource mode is 100% it is not possible to achieve that level of productivity. This idea carries over to the other physical modes and ends with 0% functionality for physical mode 5. Please note that the Resource Mode does not have to have one less row for each increasing Physical Mode. This is true for some infrastructures which others can have a completely different set of operating condition for different Physical Modes.

2.3.1.3 Color Coded Production Cell Mask

Given the 5 levels of Physical Modes and Resource Modes, it is important to be able to visually identify which mode the Production Cell is operating in. To do this I2Sim adopts a color scheme that assigns colors to each Physical and Resource Mode [4]. The color scheme and its associated operating range are shown in figure 5. Also shown in the figure are examples of the Production Cell mask showing the colors of the corresponding Physical Mode and Resource Mode.

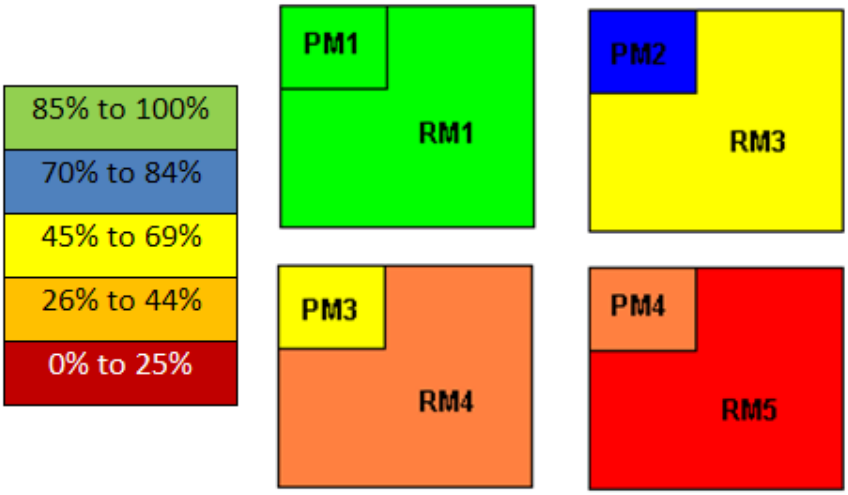

Figure 5. PM and RM color code on Production Cell Mask

The top left square represent the Physical Mode where the rest of the block represents the color of the Resource Mode. This feature allows viewer to have a quick understanding of the physical and resource state of each infrastructure. The graphic user interface shown in figure 4 allows us to edit the HRT for a particular Production Cell as well as loading a pre-defined one. While the Resource Mode is determined by the inputs, the GUI allows for several control options for the Physical Mode. These include internal manual selection and external definition. The outputs of the Production Cell also include the limiting resource that is causing it to operate at a lower Resource Mode.

2.3.2 Distributor

The distributor is closely associated with the Production Cell and is the most important control element in I2Sim. The main function of the distributor is to distribute resource tokens based on a decision that is made whether it is how much water to send to different geographic area or how traffic are divided at an intersection. The user has the ability to change the distribution ratio based on different situations. For example, a substation has a pre-determined distribution ratio during normal operation. During a disaster with limited resources the substation will need to change its distribution ratio giving different priorities to different infrastructures.

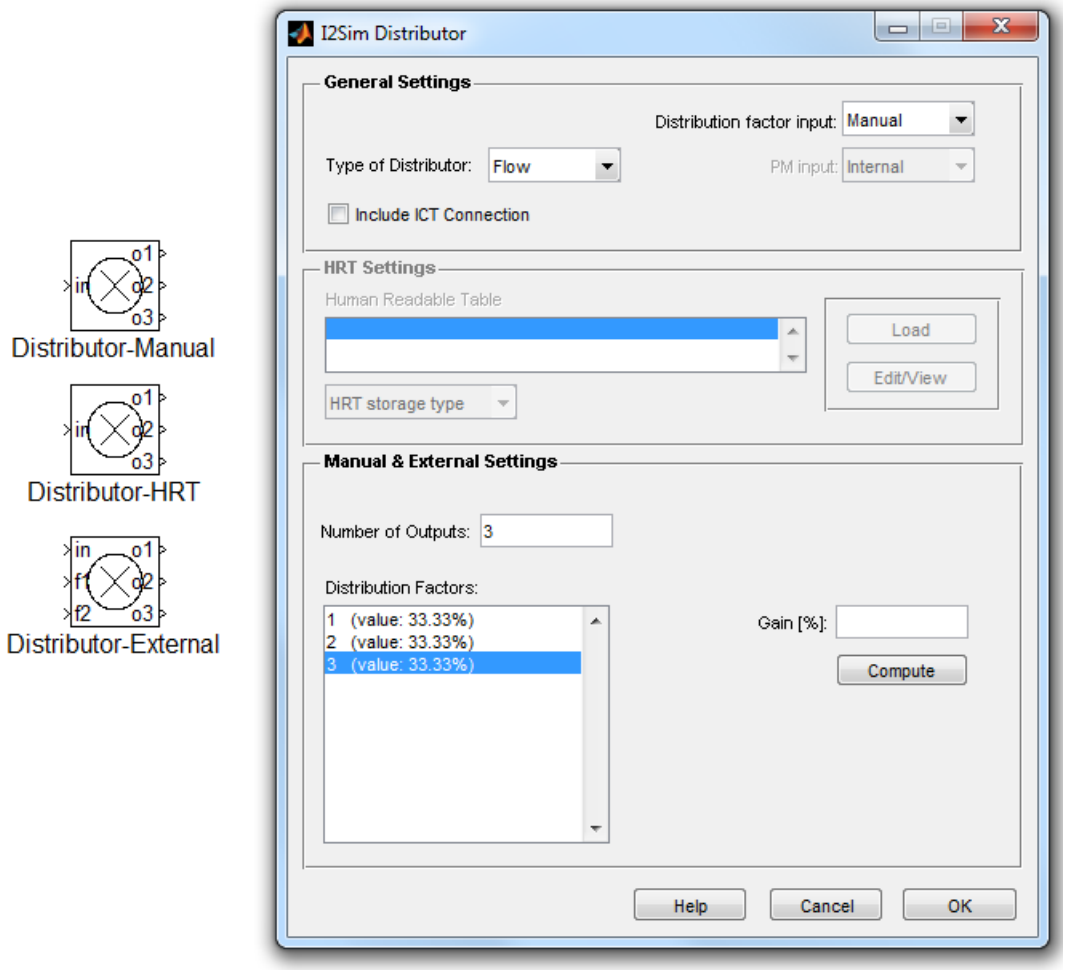

Figure 6. Distributor Mask and Graphic User Interface

Figure 6 shows three ways to control the distribution ratio. First is to internally define the ratio. This simple method allows for quick split of tokens but is unable to change dynamically during a simulation. The next method is using an HRT based on the Physical Mode of the distributor. The last method is to externally define the ratio.

2.3.3 Aggregator

The aggregator combines different tokens of the same kind and discharge them as one single token. Its function is opposite to that of the distributor but it is not considered a control element. The figure below shows the mask and GUI for the aggregator.

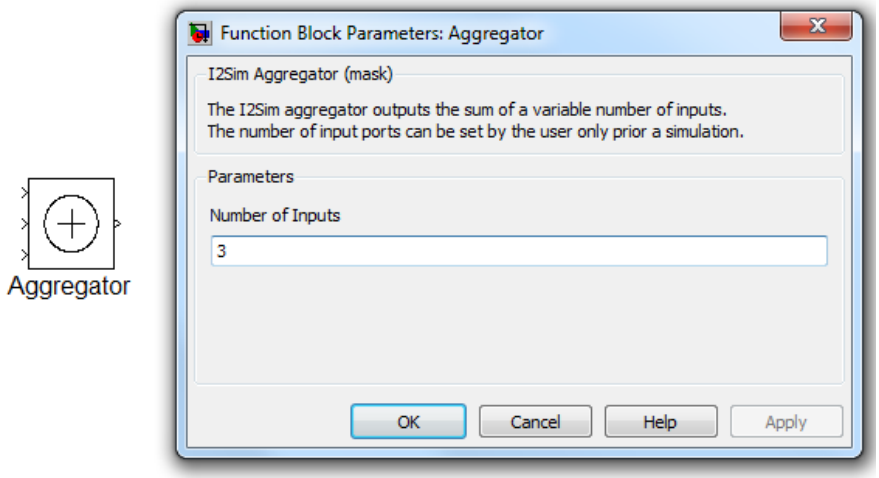

Figure 7. Aggregator Mask and Graphic User Interface

2.3.4 Source

The source block is used to generate tokens such as water or electricity. (Figure 8) There are two token types depending on the type the signal produced: Flow or Countable. For example vehicles are countable tokens because each token is one whole entity and can't be further broken down. On the other hand water is a flow token since it can be distributed into fractions. The output of the source block can either be a constant value for the entire simulation, a trigger controlled by an external signal or an event table for different output at different time during a simulation.

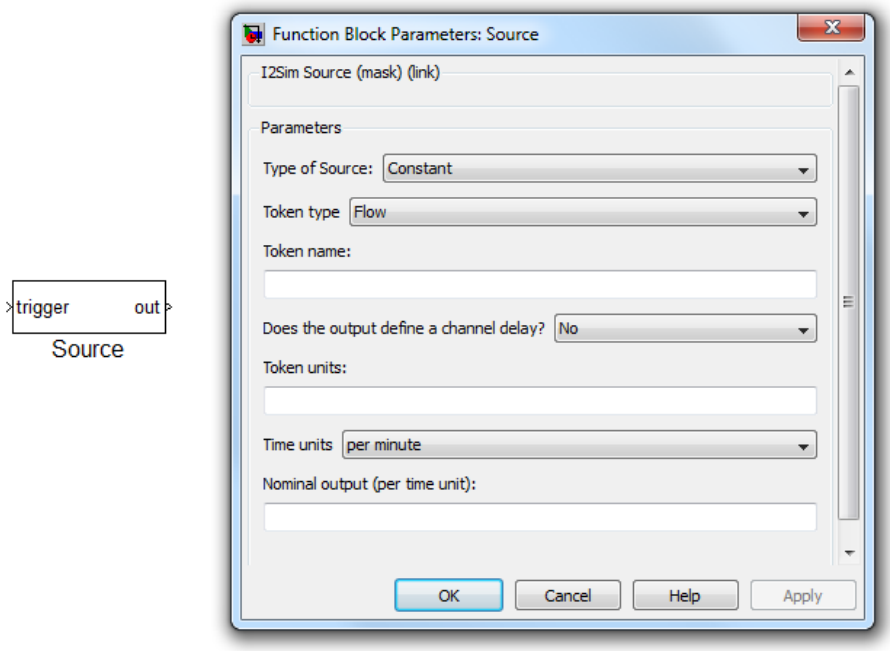

Figure 8. Source Mask and Graphic User Interface

2.3.5 Storage Cell

The storage cell takes in-coming tokens and stores them in a pool. These tokens are released to the output by a trigger command. Looking at figure 9, the user has the options to set maximum storage level as well as minimum storage level where no tokens will be released once this point is reached. It is also possible to set initial storage level and sampling time. The inputs of the cell include the in-coming tokens and the command signal that releases the tokens. Beside the realised tokens the outputs of the cell also include the currently level of the storage tank and the surplus which is the number of tokens above the maximum level. This way we can observe how many tokens are wasted. Having these features in place allows the user to use the storage cell to model many different elements from a water tank to a waiting room at a hospital.

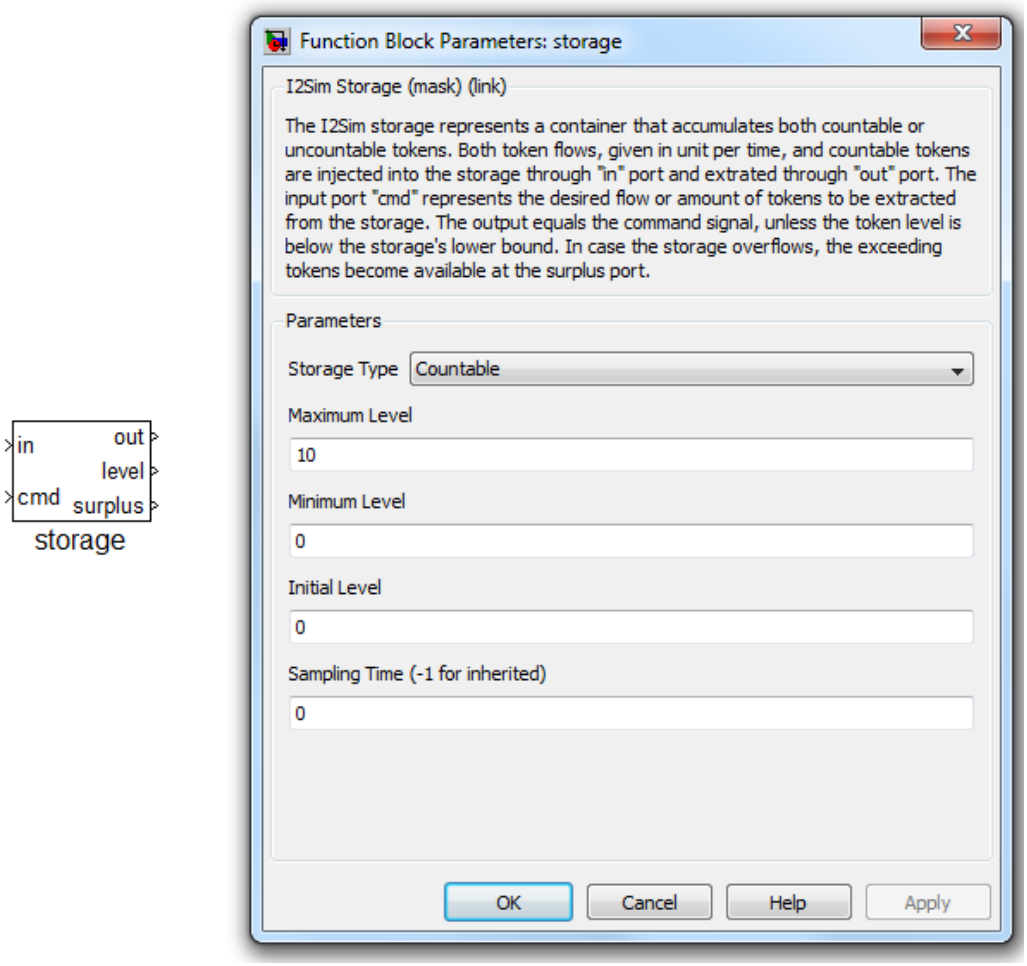

Figure 9. Storage Cell Mask and Graphic User Interface

2.3.6 Channel Cell

The channel cell is designed to carry tokens between different cells and blocks. Depending on the modelling need a delay can be applied to the channel in three ways. One way is to use a manual input which applies a constant delay to the tokens. Another way is using the Physical Mode principle where five different delays can be applied depending on the physical damage of the channel. The last method is using an external input. The following figure shows the current channel mask and GUI. The modification performed on the channel cell will be discussed in later sections due to the fact that the study presented in the next chapter was done with the current channel model.

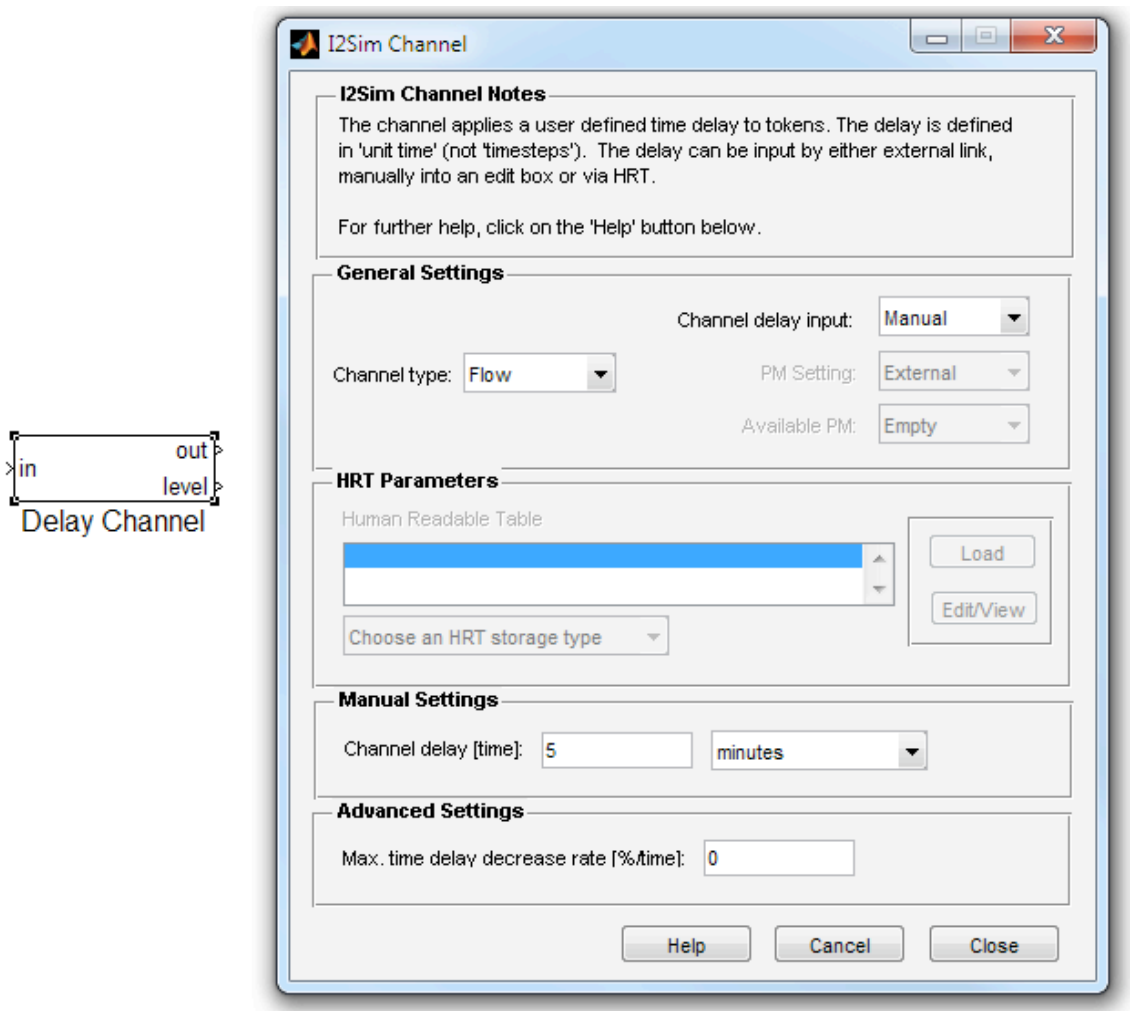

Figure 10. Channel Mask and Graphic User Interface

3 Sendai Japan Earthquake and Tsunami Case Study

3.1 Historical Event Overview

The Tōhoku earthquake and tsunami occurred on the 11 of March, 2011. The magnitude of the earthquake was 8.9 M_M and it was the most powerful earthquake to ever hit Japan. The earthquake triggered powerful tsunami that greatly affected the Miyako prefecture and travelled up to 10km inland. The National Police Agency of Japan has confirmed around 15870 deaths, 6114 injured and 2814 missing people across the region of Tōhoku. Significant damages to infrastructures are also recorded.[6] The following study aim to conduct scenario analysis using the I2Sim toolbox.

3.2 Scenario Definition

The affected areas in Sendai which are named “Impact Zones” for the study are shown in the figure below. [8] These areas are comprised of Miyagino Ward and Wakabayashi

Figure 11. Map of Sendai Showing Three Impact Zones

Ward. Miyagino Ward is further divided into the northern and southern regions because of the river that separates the two areas. The estimated population that was affected by the disaster are broken down as follow:

- Impact zone 1: Wakabayashi (675)
- Impact zone 2: Miyagino 30 % (385)
- Impact zone 3: Miyagino 70 % (898)

Figure 12 shows the areas under study which extends beyond the Impact Zones. An Evacuation Zone and Shelter Zone are also created. During the disaster, survivors are brought to the Evacuation Zone either by ambulances or on foot. They are then triaged and ready to be transported to either the hospital or the Shelter Zone.

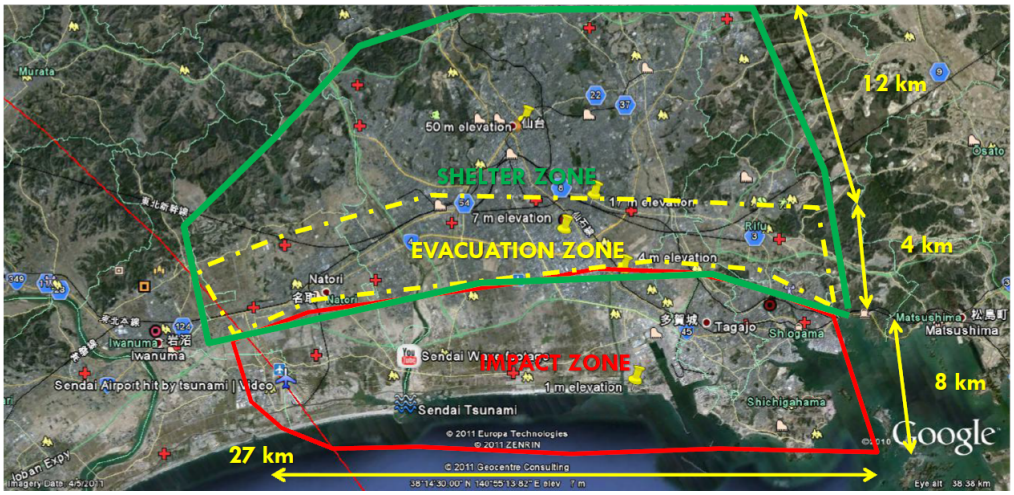

Figure 12. Map of Sendai Showing Areas Under Study

The transportation of the survivors is modelled by assigning designated routes from the Impact Zones to different hospitals. These routes are shown in the Figure 13. The map on the left identifies the designated routes to extract survivors out of Impact Zone 1 and 2 where the map on the right shows the route for Impact Zone 3. The estimated time of travel is summarized in Table 4. The blank cells in the table mean that particular route was not used in the study. The hospital type defines two different types of hospital: Serious Injury Hospital (SIH) and Light Injury Hospital (LIH). Depending on the severity of injuries survivors will be sent to one of these two types of hospitals. The transportation speed is assumed to be constant. Finally the timeline of the event is summarized in table 5 and time 0 represents the instance where the earthquake occurred. There are three types of events in the table. “Facts” are the events that have been confirmed to have happened and “assumptions” are events that have high probability of occurring based on past experience and policies. Lastly, “scenarios” are created for study purposes.

Hospital Name	Hospital Type	Distance in KM			Speed	Travel Time in Minutes		
		Impact Zone 1	Impact Zone 2	Impact Zone 3		Impact Zone 1	Impact Zone 2	Impact Zone 3
Sendai Municipal	SIH 1	14.0	14.5	14.4	75 km/hr	11.2	11.6	11.5
Tohoku University	SIH 2	10.8	10.9	14.0		8.6	8.7	11.2
JR Sendai	LIH 1	11.2	10.2	--		9.0	8.2	--
Sendai Teishin	LIH 2	11.6	11.5	--		9.3	9.2	--
Sendai Medical Center	LIH 3	10.6	8.8	--		8.5	7.0	--
Sendai Open	LIH 4	--	--	11.3		--	--	9.0

Table 4. Estimated Travel Time from Impact Zone to Various Hospitals

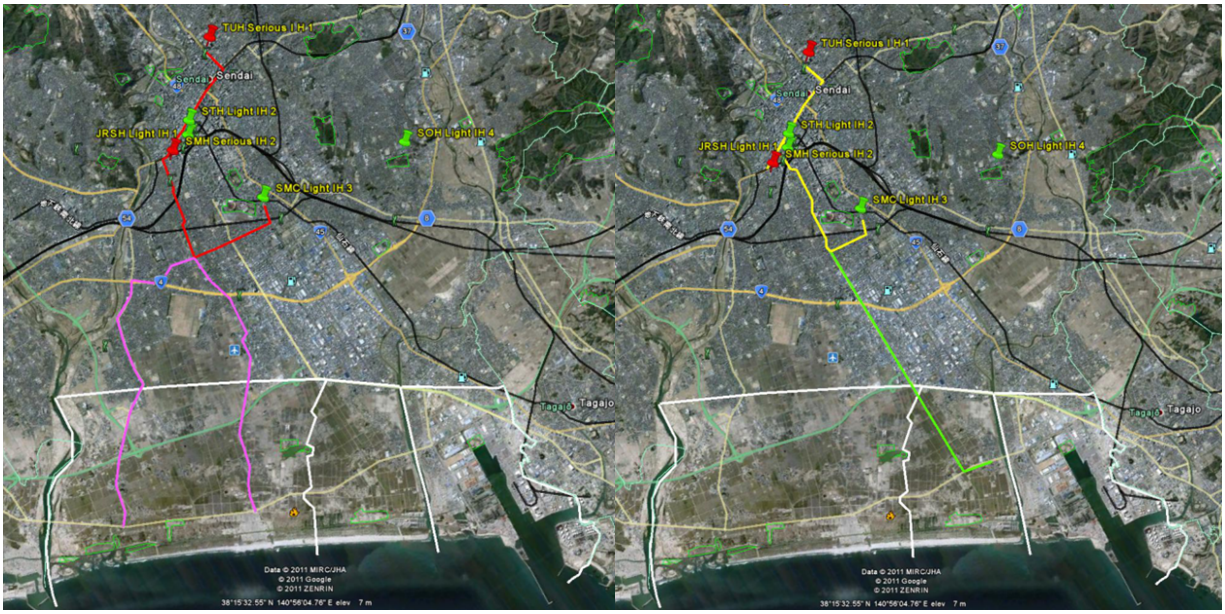

Figure 13.Map of Extraction Route from Impact Zone to Hospitals

No	time (min)	Event
1	0	Normal conditions (fact)
2	45	Earthquake M = 9.0 (fact)
3	53	A Tsunami warning is issued for the coastal area of Japan (fact)
4	54	An evacuation process is going on (fact)
5	75	The first tsunami wave hits the impact zone (fact)
7	160	Survivors start evacuating the impact zones (assumption)
8	220	Roads are prepared to begin the triage, search and rescue process (assumption)
9	221	The process for transportation of survivors and casualties begins (assumption)
10	300	Ambulance dispatch goes down (Scenario)
11	400	Ambulance dispatch restored (Scenario)
12	500	Medical supplies depleted at serious injury hospitals (Scenario)
13	600	Additional medical supplies provided to serious injury hospitals (Scenario)

Table 5. Timeline of Events Considered for the Study

3.3 I2Sim Sendai Modelling Components

The following sections discuss components that have been constructed to represent the Sendai model. The critical systems constructed are: Electrical System, Water System, Transportation System, Emergency Response, Hospital and Shelter.

3.3.1 Electrical and Water Systems

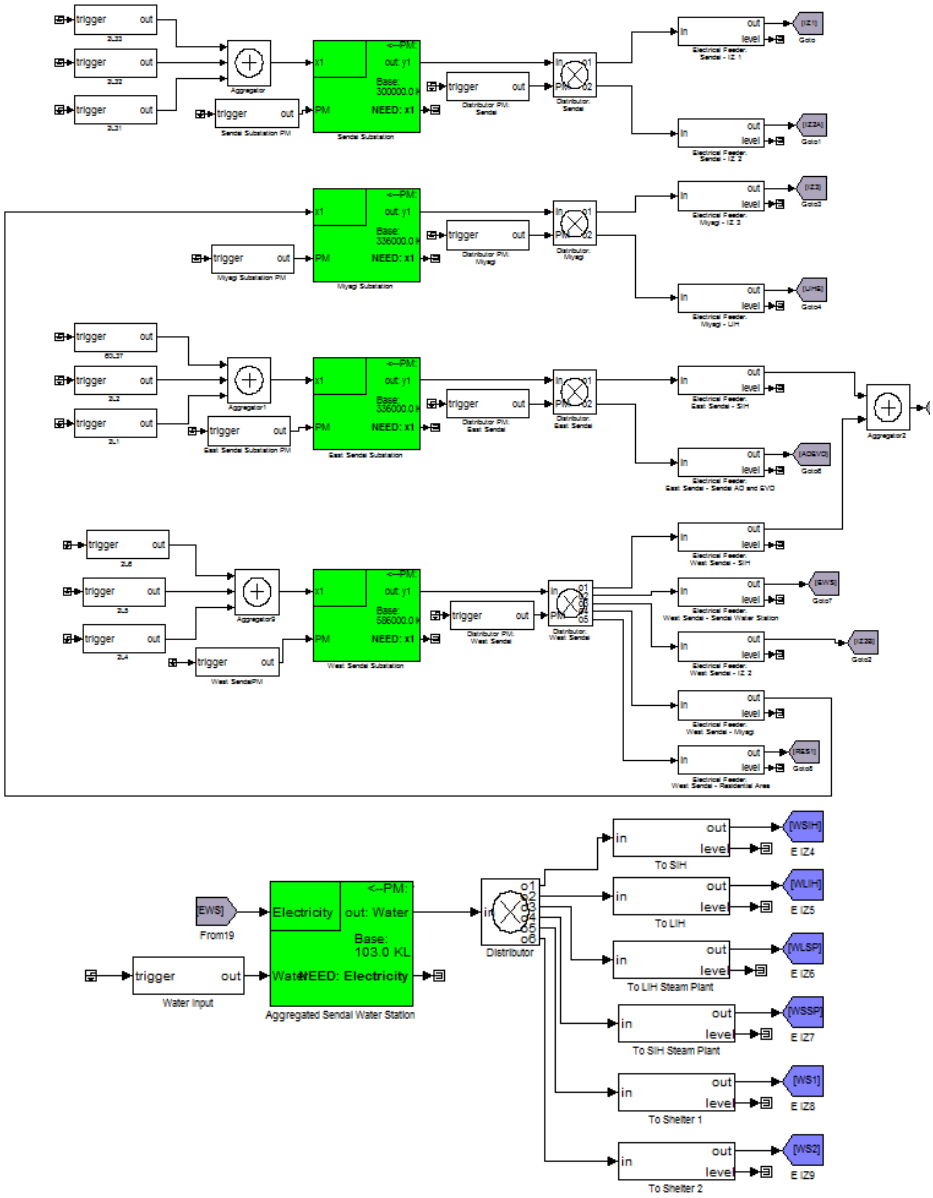

Figure 14.Substation and Water station Implementation

There are four electrical substations in the Sendai region and one aggregated water station which are represented by Production Cells. The power plants and water sources in which supply those substations and the water station are represented by Source blocks. The electricity generated is distributed to the hospitals, water station, shelter, emergency dispatch and the Impact Zones. It is important to note that West Sendai substation is also the supplier of Miyagi substation. In a similar fashion water is sent to shelters, hospitals, and steam plants at the hospital. [7] The power and water system is shown in figure 14.

3.3.2 Emergency Vehicle and Ambulance Dispatch

The implementation of the ambulance and emergency vehicle dispatch is shown in Figure 15. Both systems are very similar and comprise of two main components: a Production Cell and Storage. The Storage acts as a pool where the vehicles are stored. The Production Cell functions as the command input to the Storage and therefore controls the release of the vehicles. The Production Cell has three inputs: Electricity, Dispatch and Physical Mode. Depending on the resource availabilities the Production Cell will output the number of vehicle which can be release at each time step. A Channel estimates the travel time to and back from the Impact Zones and a Distributor controls how many vehicles are sent to each Impact Zone.

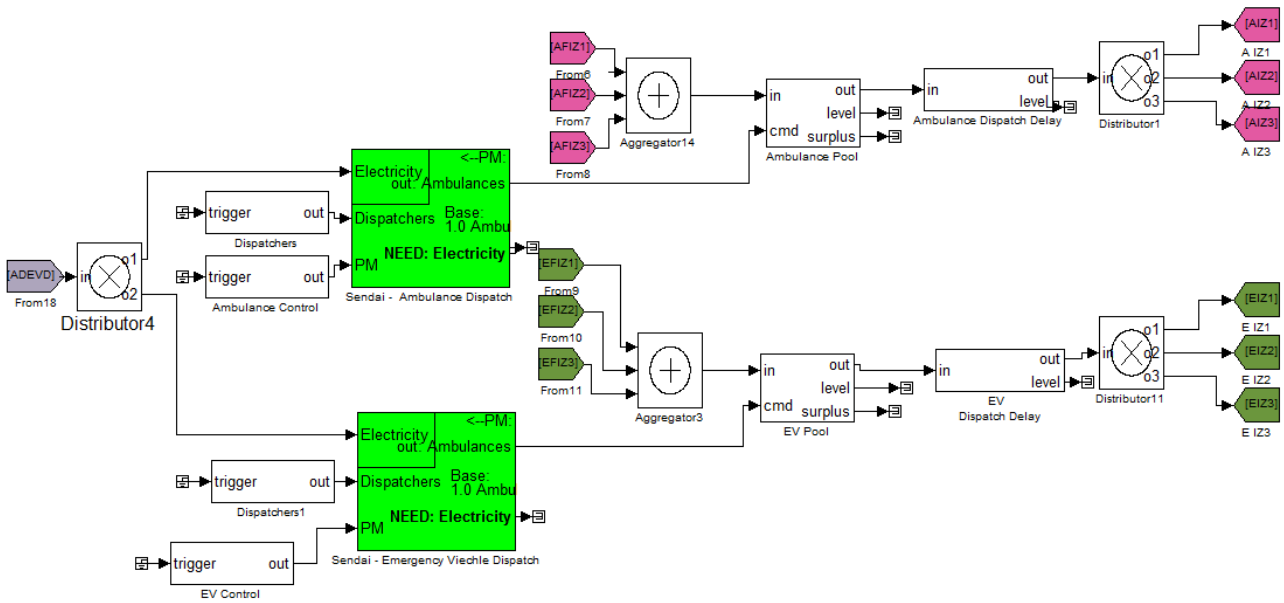

Figure 15. Ambulance and Emergency Vehicle Dispatch Implementation

3.3.3 Impact Zone and Triage Process

The next critical component is the Impact Zone. As described in section 3.2 the affected area of the disaster are broken into three Impact Zones and the I2Sim model is shown in figure 16. All Impact Zones are modelled in the same way and its main components are a Production Cell and a Storage Cell. The Storage represents the amount of people who are trapped inside the area that needs to be rescued. The Production Cell on the other hand represents the physical state of the Impact Zone and dictates the amount of people which can be rescued at each time step based on the following factors:

- Electricity
- Demographic
- Guidance

- Rapid Response
- Layout
- Emergency Information
- Physical Mode

The Physical Mode input simulates the physical state of the impact zone to represent the earthquake and tsunami events. Depending on the timeline of events the Impact Zone will be in one of 5 states and they are listed in Table 6. Regardless of the other inputs the physical mode will have the most impact on the rate of survivors leaving the area. The output of the storage is connected to a distributor that output the survivors to either the shelter or the triage area. This might seem unrealistic since survivors need to be triaged before sending to the shelter. This is true as Figure 17 demonstrates that the "Triage Distributor" will send people to either the shelter or the hospital. The purpose of the Distributor in Figure 16 has another purpose, which is to attempts to model the behaviour of people instead of being used as a decision making node. As seen in table 5, after the earthquake there is a window of time before the tsunami hits. During this time it is assumed that a large number of people who are not harmed would attempt to move to the Evacuation Zone or Shelter Zone. Once tsunami hits people who are still inside the Impact Zones are either trapped or injured and we can assume at this point very few people have the ability to leave the Impact Zone by themselves unharmed.

Physical Mode	State of Impact Zone
1	Prior to Disaster
2	After Earthquake
3	After Tsunami
4	During Earthquake
5	During Tsunami

Table 6. Impact Zone Physical Mode Mapping

The next section of the model is the triage area where the rescued survivors would be sent to. This process is shown in Figure 17. There are two Channels of survivors leaving the Impact Zones as discussed in the section before. "From IZ1 To Shelter" represent the unharmed survivors who were able to evacuate out of the Impact Zone 1 on their own and they will directly go to the Shelter Zone. On the other hand, "From IZ1 To Triage" represents the survivors that were trapped inside Impact Zone 1 and needed to be rescued. These survivors will go to the "Triage Distributor" to determine if they need to go to a hospital or can go straight to the shelters. People going to the hospital are then sent into a storage where the release command is governed by the ambulance dispatch signal discussed in section 3.3.2. Another distributor is constructed to send patients to either the Seroius Injury Hopstial or Light Injury Hospital. The people who are going to the shelter area are stored in a similar fashion and the release command is controlled by the emergency vehicle dispatch signal.

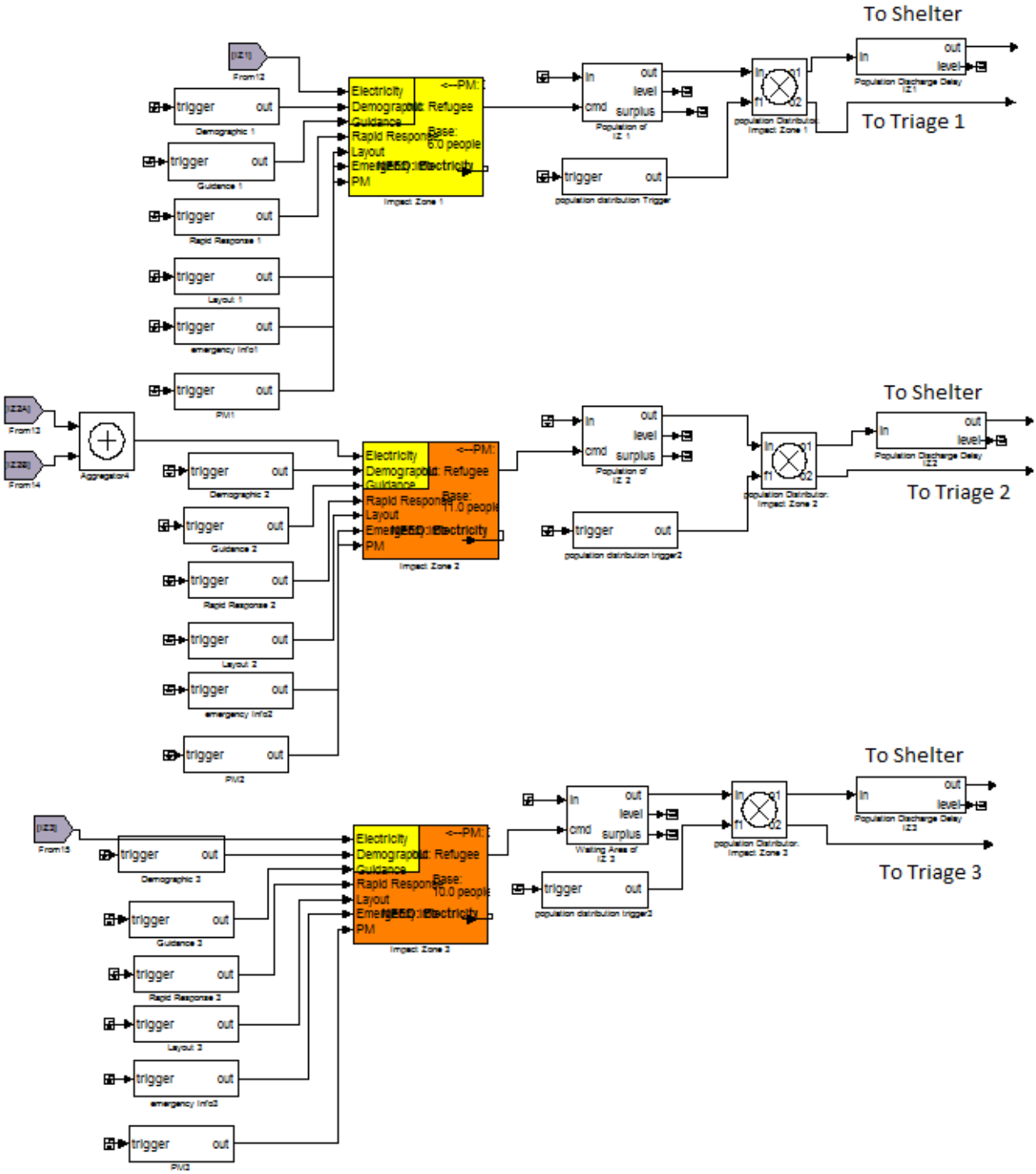

Figure 16. Impact Zone Implementation

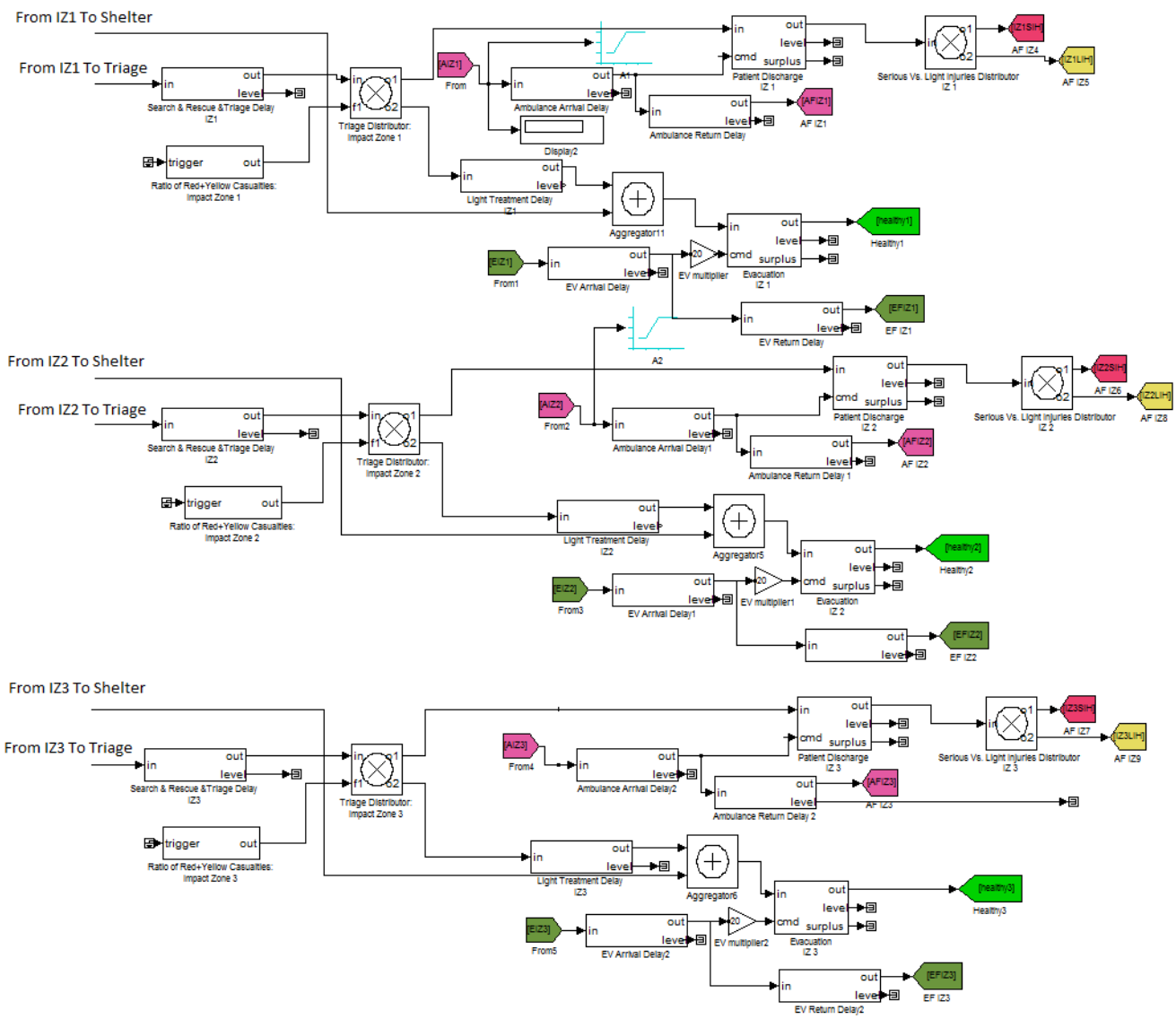

Figure 17. Triage Process Implementation

3.3.4 Shelter Zone and Residential Area

Healthy survivors are brought to one of two Shelter Zones. Each Shelter is represented by a Storage Cell for incoming survivors and a Production Cell to represent the state of the shelter which is shown in Figure 18.The inputs to the Shelter are Water, Medicine, Food and Physical Mode. The output of the Shelter is the amount of people it is able to sustain being healthy. A lack of resource or over capacity will cause people to become ill. A mechanic is created in the model so that if the level of the storage exceeds the output of the Production Cell the incoming survivors will be distributed to three different places. [7] The people will be either sent to one of the two hospitals or back home to the residential area which is shown in Figure 19. A similar mechanism for the residential

area is created to calculate how many people will become ill if insufficient resources are given to the area.

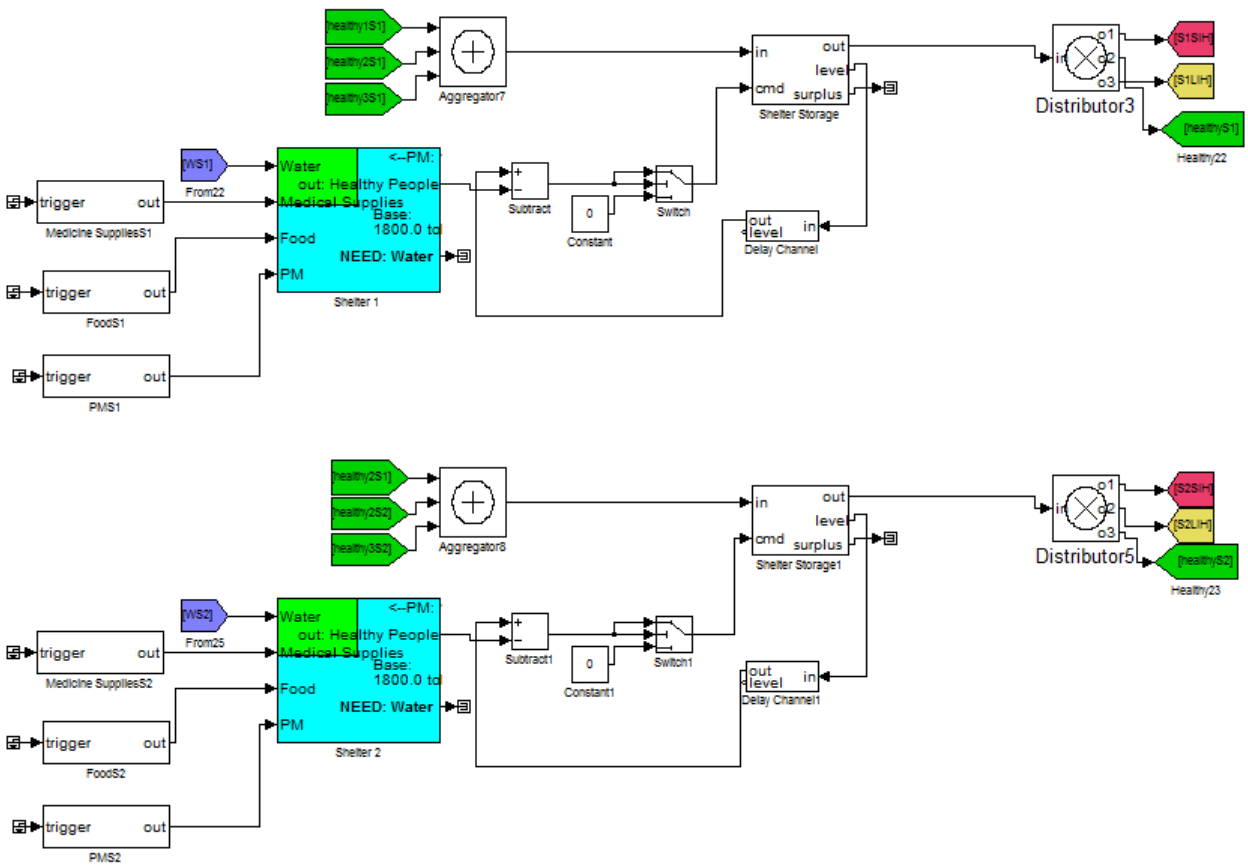

Figure 18. Shelter Zone 1 & 2 Implementation

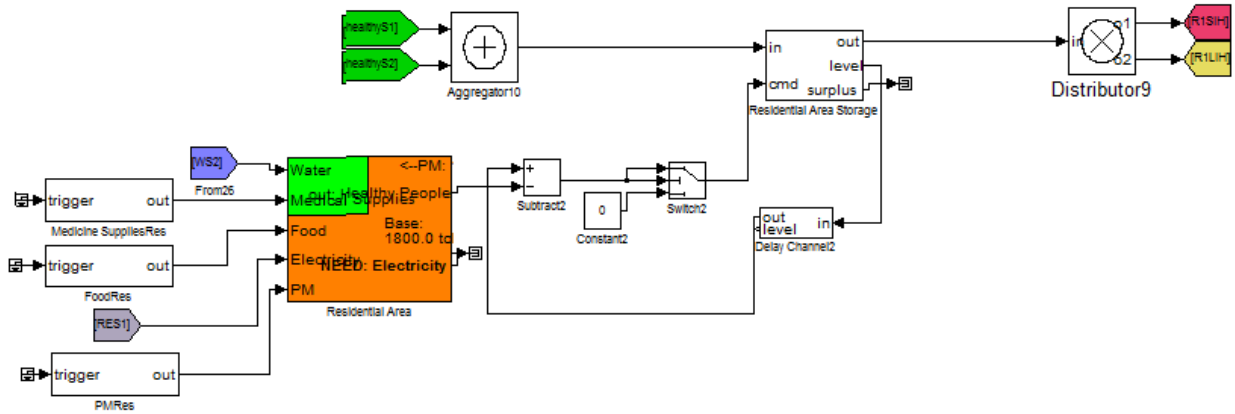

Figure 19. Residential Area Implementation

3.3.5 Serious Injury Hospital and Light Injury Hospital

The list of hospitals in Table 4 is aggregated into two types of hospitals: Serious Injury Hospital and Light Injury Hospital show in Table 7. [7]The physical states of both hospitals are represented by Production Cells with the following input parameters:

- Electricity
- Water
- Natural Gas
- Medical Supplies
- Steam
- Physical Mode

Depending on the Resource Mode of the hospital the output of the hospitals will be the discharged patients per time step. This signal acts as a release command for a Storage Cell named “Waiting Room” where patients from the impact zones are brought to. Sick people from the shelter and residential area are also brought to the hospitals. Each hospital also has its own steam production unit represented by a Production Cell with inputs of Water and Physical Mode. The implementation of the hospitals and steam plants are shown in Figures 20 and 21.

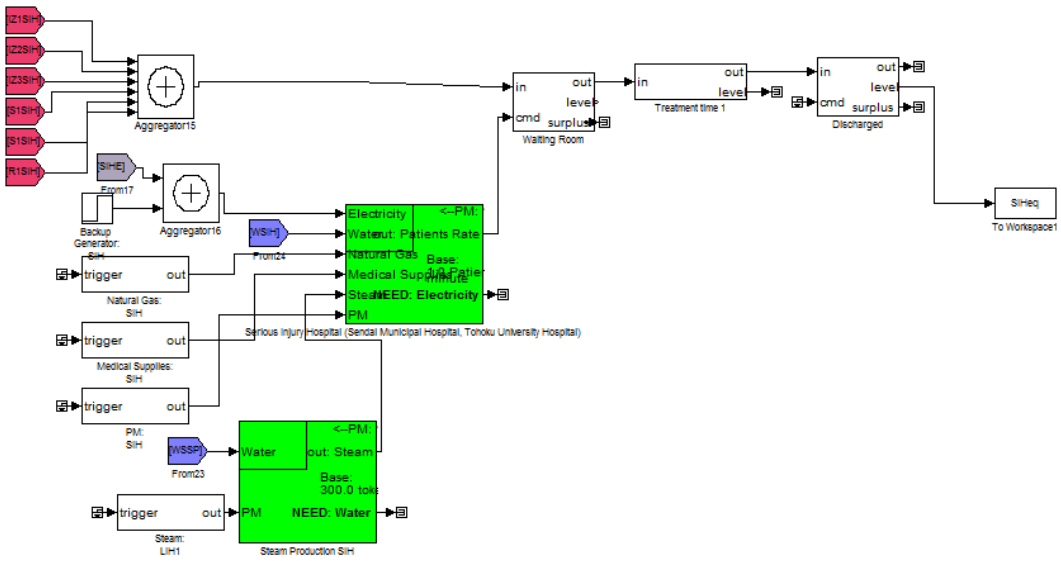

Figure 20.Serious Injury Hospital and Steam Plant Implementation

Type of Hospital	Hospital in Sendai
Serious Injury	Sendai Municipal Tohoku University
Light Injury	JR Sendai Sendai Teishin Sendai Medical Center Sendai Open

Table 7. Sendai Aggregated Hospital

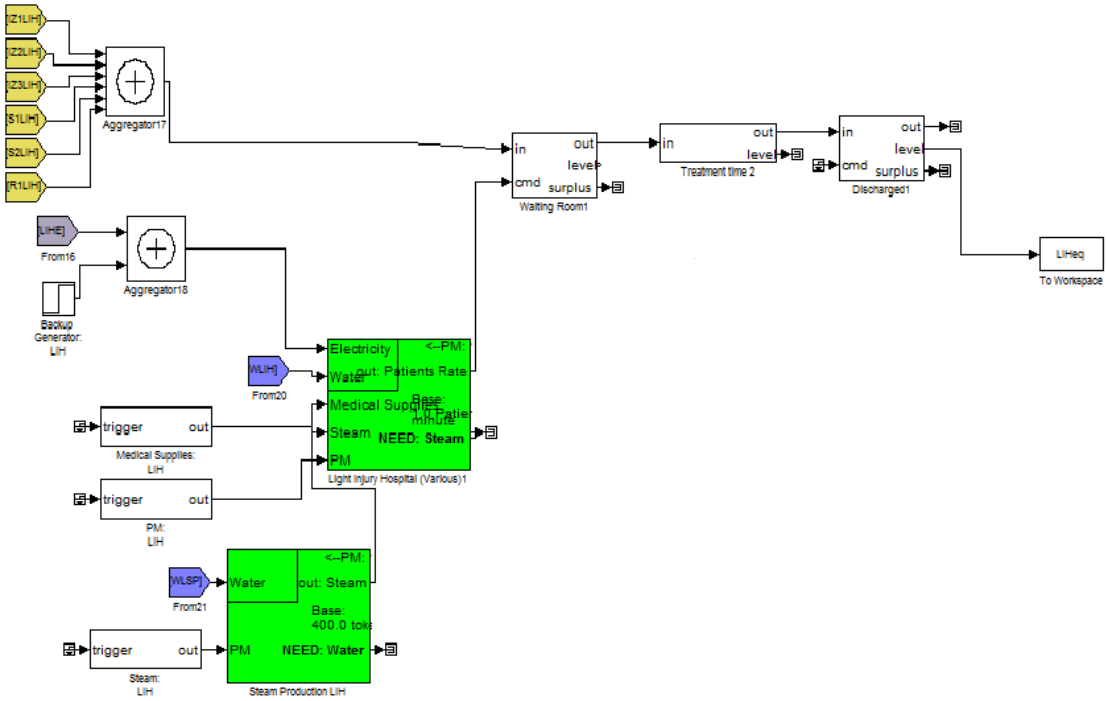

Figure 21. Light Injury Hospital and Steam Plant Implementation

3.4 Sendai Modelling Results and Conclusion

Scenario analysis is performed based on the events described in Table 5. The simulation is run for 3000 time steps with each time step represents 1 minute. Since the most important thing in disaster response is saving human lives the sensor points of the system is at the outputs of the hospitals which serves as the bases of evaluation for our strategy. As mentioned in section 3.3.3 the Physical Modes of the Impact Zones are varied to reflect the disaster events. The following table reflect the change of Physical Mode of the Impact Zones in accordance to the events in Table 5.

time (min)	Impact Zone Physical Mode
0	1
45	4
53	2
75	5
160	3

Table 8. Physical Modes of Impact Zones during Simulation

In order to observe the consequences that different strategies cause the following test cases are implemented. Before patients can be treated at the hospital they need to be extracted out of the Impact Zones. The “Ambulance Dispatch Distributor” is responsible for deciding how many ambulances should be sent to each Impact Zone. By varying this ratio based on different polices

we can observe different results at the hospital's outputs. The three different polices and its corresponding distribution ratios are show in the table below.

Strategy 1: Resources allocated equally among all evacuation zones

Resource	Evacuation Zone 1	Evacuation Zone 2	Evacuation Zone 3
Ambulance Service	33%	33%	33%

Strategy 2: Resources allocated based on the evacuation zone population

Resource	Evacuation Zone 1	Evacuation Zone 2	Evacuation Zone 3
Ambulance Service	40%	15%	45%

Strategy 3: Resources allocated based on infrastructure damage

Resource	Evacuation Zone 1	Evacuation Zone 2	Evacuation Zone 3
Ambulance Service	30%	25%	45%

Table 9. Ambulance Distribution Ratio for Three Different Strategies

Strategy 1 state that the ambulance distribution should be equal across the three areas and strategy 2 and 3 prioritize based on population density and Impact Zone damage level respectively. The plot in figure 22 shows the result of the ambulance distribution strategies for the Light Injury Hospital.

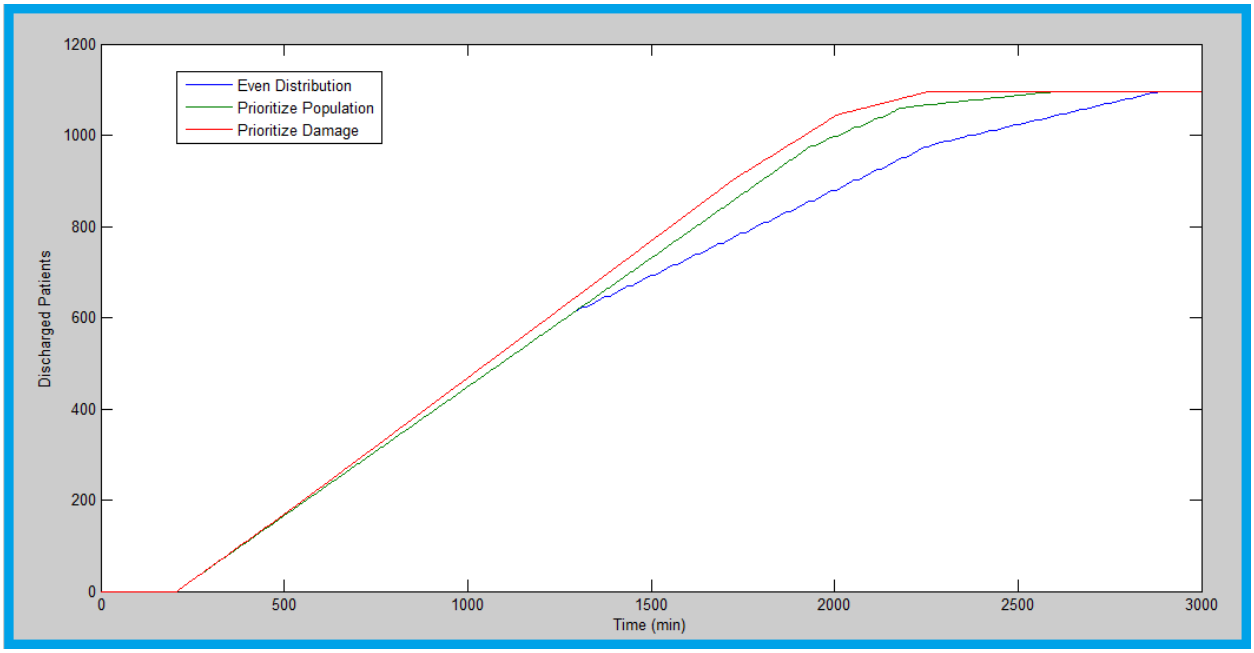

Figure 22.Number of Discharged Patient for Different Ambulance Distribution Strategies for the Light Injury Hospital

From the figure of the Light Injury Hospital plot it is apparent that initially the different strategies yield similar rates of discharged patients. But the plot that priorities according to Impact Zone damage level quickly increases in discharge speed since the method allocates more resources

to highly accessible area, which will result in higher rate of extraction. Even distribution method decreases in rate at around 1300 minutes because it doesn't consider the factors the other strategies do. The final result shows that infrastructure damage prioritization yields the faster rate of discharge while even distribution yields the lowest rate. Figure 23 shows the plot for the Serious Injury Hospital. As expected the results are similar to the Light Injury Hospital. It can be seen that by using one control element in a complex system the results can be very different. In the next chapter a test case of smaller geographic scale will be investigated. Even though the Guadeloupe Island is smaller in size compare to Sendai it gives us an opportunity to model the Island in greater detail.

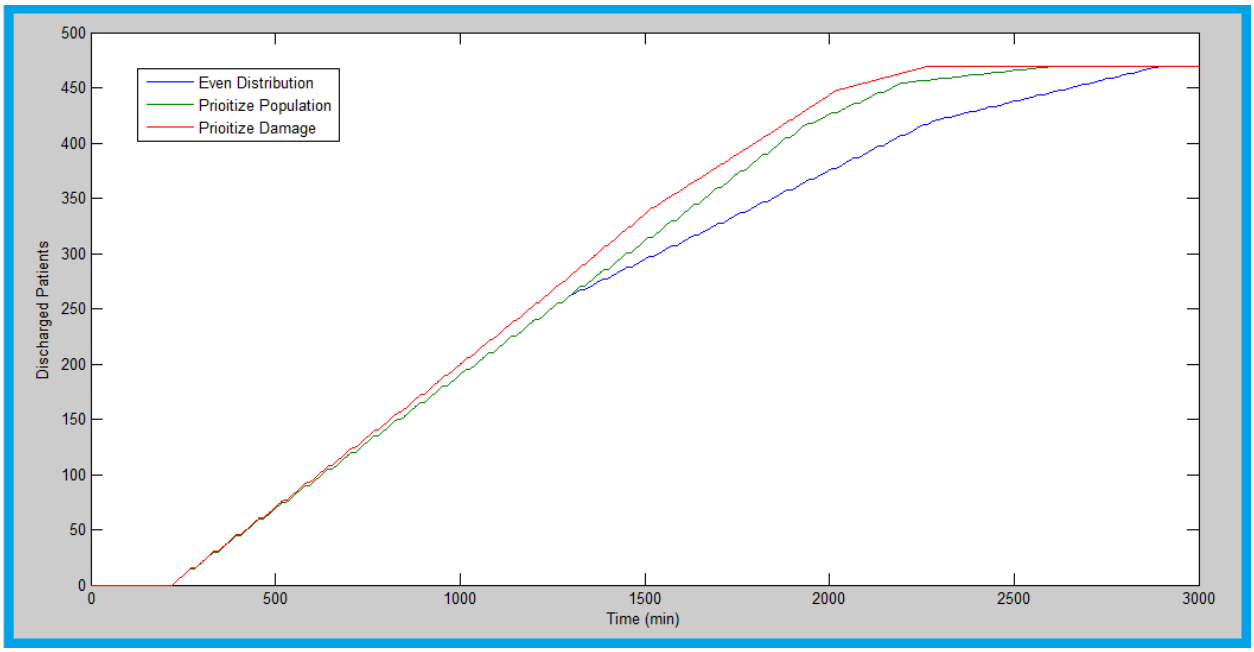

Figure 23.Number of Discharged Patient for Different Ambulance Distribution Strategies for the Serious Injury Hospital

4 MATRIX - Multi-Hazard and Multi-Risk Assessment Methods for Europe

4.1 Project Overview

The MATRIX project is designed to investigate in the areas of multiple natural disasters and risk analysis. The project addresses the following three main objectives: [3]

- Developing methodologies for integrated multi-hazard risk assessment focusing on risk comparability, cascading disaster events and time sensitive vulnerabilities.
- Comparing the multi-risk framework with single risk framework analysis.
- Setting up an information technology infrastructure to study the test cases for the multi-risk methodologies.

Figure 24. Map of Guadeloupe

In order to achieve the above goals several real test sites are chosen including Naples, Cologne and the Guadeloupe Island in the French West Indies. Guadeloupe is one of five French overseas territories with around 40200 inhabitants and covers 1632 km^2. Guadeloupe is

composed of two main islands: Grande-Terre and Basse-Terre. For the purpose of this project only Basse-Terre is considered.

Due to Guadeloupe's geographic location and geology it is highly prone to natural disasters. There has been a long history of catastrophic natural phenomena including hurricane, earthquake, volcanic eruption, landslide and tsunami. [9] Figure 25 shows the different cascading disaster events that could occur in Guadeloupe while separating them into meteorological and geological hazardous events. Events such as earthquake, volcano eruption and hurricane are defined as principal events that trigger other events such as landslide and tsunami. The following sections will detail the process of scenario definition and model construction of the Guadeloupe Island in I2Sim.

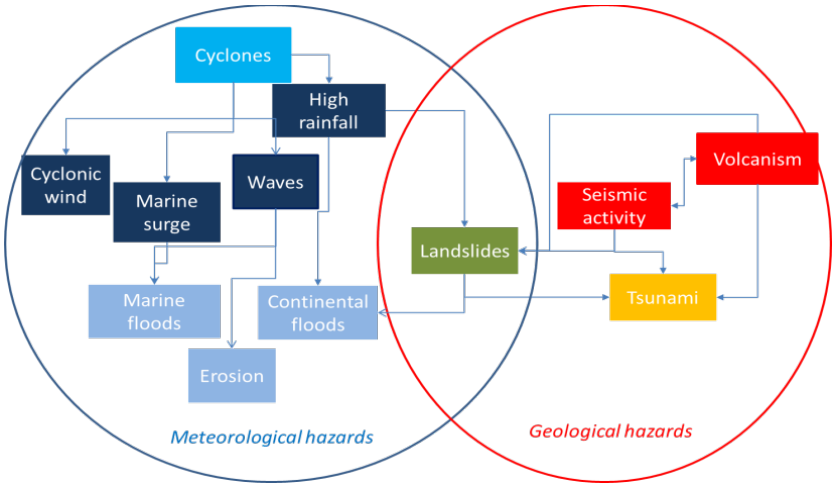

Figure 25. Relationships between Cascading Disaster Events

4.1I2Sim Block Modification

In order to more accurately model the scenarios in the Guadeloupe Island study case some blocks in the I2Sim toolbox need additional functionalities. The biggest modifications were made to the Channel Cell while other components such as the Storage Cell also needed improvements.

4.1.1 Delay Factor Modification

The fundamental wave propagation equation is shown below:

$$Y(t) = \alpha x(t - \tau) \tag{3.1}$$

The same equation can be applied to represent the Channel Cell where α represents the loss through the channel and τ is the time delay.

The existing method of using the HRT to determine time delay only allows the use of Physical Mode but not the Resource Mode, which limits the functionality of the Channel Cell. For

example, when modeling the road network not only does the physical condition influence the delay, there are other contributing factors. These include traffic condition, number of traffic lights or level of guidance during an accident. Now these factors can be included as forms of inputs for the HRT similar to that of the Production Cell with one key difference. The output of the HRT in a Production Cell is the output of the Production Cell block. For a Channel Cell the output of the HRT is the associate time delay that will be applied to the in-coming tokens. A new feature is added so the delay can be applied one of two ways when using the HRT. The user can either define the output as the total delay within a given channel or specify the delay as per unit distance. This feature is useful in modeling road networks since the delay is dictated by the distance which can be an external input. The flow chart in figure 26 shows the logic behind this implementation.

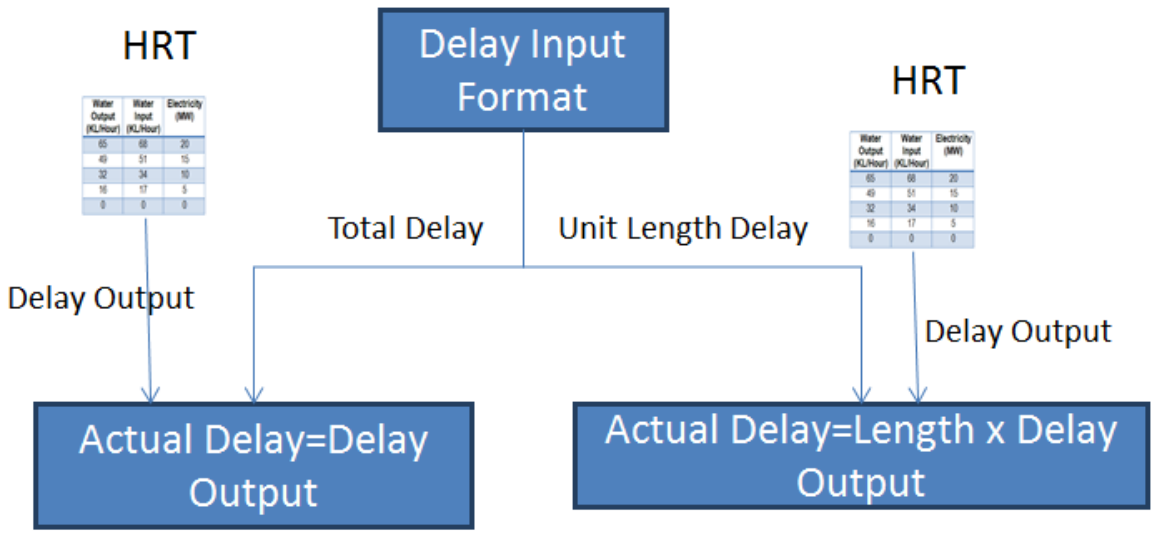

Figure 26.Calculating Actual Delay Based on Delay Input Format

4.1.2 Loss Factor Modification

The loss factor is another feature implemented for the Channel Cell to model infrastructures such as transmission lines and water pipes. The loss factor can either be entered manually or through an HRT. When the input method is using an HRT, another instance the HRT needs to be created for the same block to distinguish it from the HRT used for the delay. At every time step, the specified percentage loss is taken away from the incoming tokens. If the token type is a “flow” then the result of applying a loss factor can be in decimals, while countable token need to be rounded down to whole numbers. Figure 20 shows the flow chart for the loss factor implementation and the combined delay and loss factor logic for a Channel Cell is shown in the figure 21.

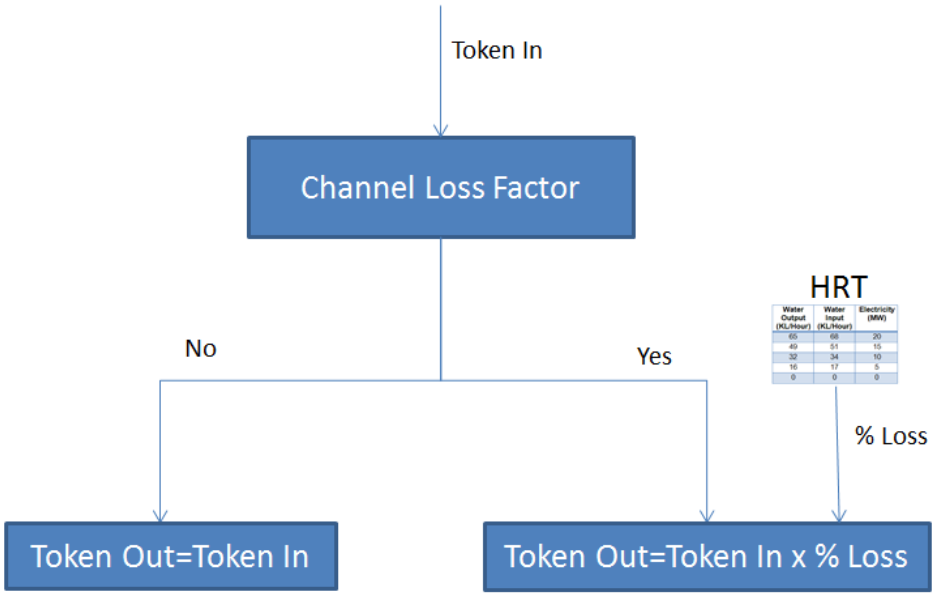

Figure 27. Loss Factor Calculation for In-Coming Tokens

If the preferred output method is using the HRT for both time delay and loss factor, there are situations where both HRTs could have the same input. For example earthquake survivors would try to move to safer ground after the disaster. In this case the tokens are the people and the Channel Cells represent the roads in which people travel to reach the shelters. In such a situation, an important input parameter is guidance. If sufficient guidance is given to the population the amount of time needed to travel to the shelters is reduced. At the same time if the survivors were told to stay away from dangerous areas, this would also reduce the loss of lives. Therefore, “Guidance” affects both, delay and loss. In this case only one input is shown instead of two on the mask of the Channel Cell in order to avoid redundancy. The complete MATLAB code is not included in the appendices due to the large amount of code involved.

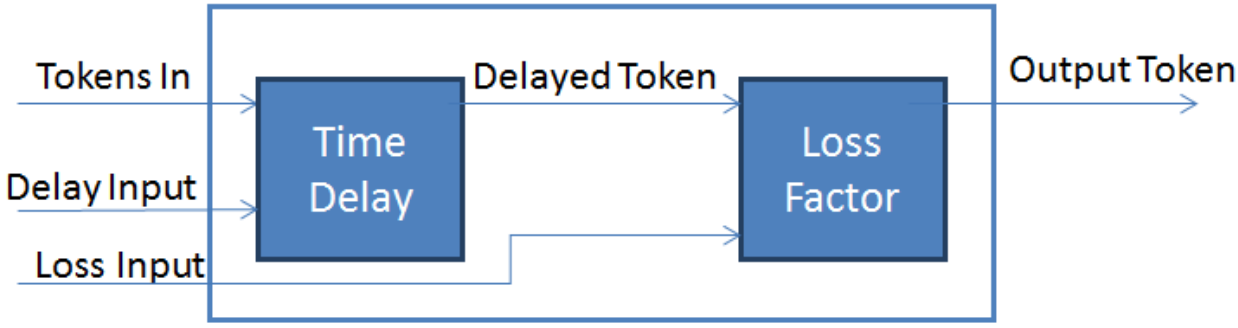

Figure 28. Channel Loss and Delay Implementation Logic

The revised Channel mask and graphic user interface is shown in figure 29. The red boxes highlight the features that have been added for the new version of the Channel Cell. Setting the “Channel Loss” to “Yes” activates a new HRT for the loss factor. All the associated inputs that are defined in this HRT will appear as inputs of the Channel Cell. Similarly if the “Delay Input

Format" is set to "Delay/Distance" then a new input port will appear requiring input for the length of the channel.

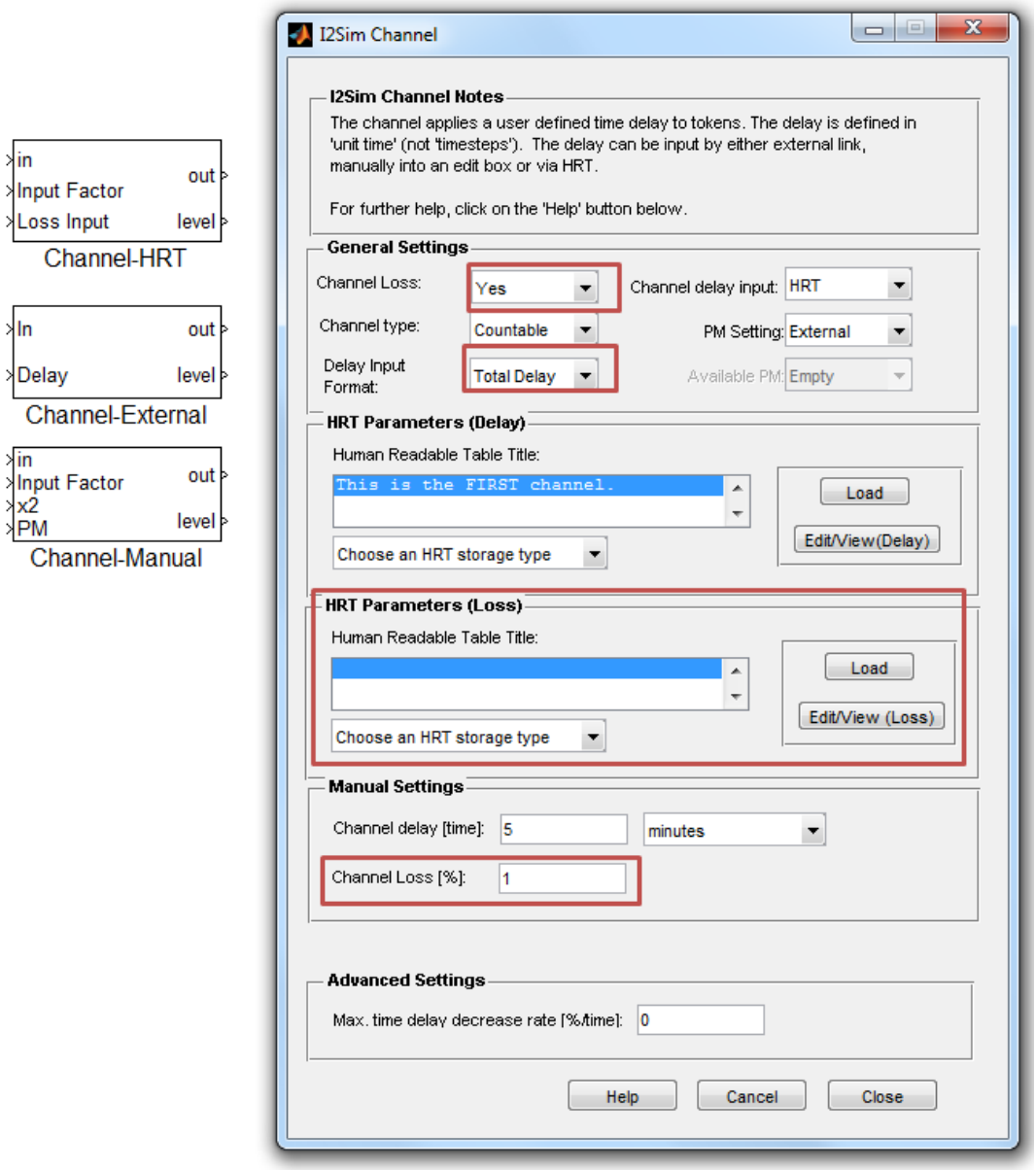

Figure 29. Modified Channel Cell Mask Graphic User Interface

4.1.3 Maximum Time Delay Modification

The maximum time delay input under "Advanced Setting" for the Channel Cell has been modified to function correctly. An input between -100 to 100 can be entered to reflect an increase or decrease in the time delay. This adds another dimension for situations where delays naturally increase or decrease with time.

4.2 Scenario Definition

In order to access the vulnerabilities of the systems located on the Island and their impacts on risk management, the scenario defined for the study needs to follow a few criteria. The magnitude of the earthquake needs to be high enough in order to induce different levels of damage across all systems and geographic areas. Cascading events such as landslides also need to be considered and, most importantly, the scenario has to be realistic.

4.2.1 Earthquake Scenario

In order to meet the desired requirements mentioned in section 4.2 a scenario from the Department Scenario of Seismic Risk in Guadeloupe has been selected [10]. The scenario is called “Bouillante-Montserrat” and it defines an earthquake located north west of the Basse-Terre Island with a magnitude of 6.2 on the Richter scale and with a depth of 10km.

The regional peak ground acceleration (PGA) is a measure of the severity of the shake in a given geographic area produced by the earthquake. It is calculated using the attenuation law defined by Young et al [11]. Given the regional peak ground acceleration, it is possible to calculate the local peak ground acceleration using two coefficients: geological and topographic site effects. [10] These two factors take into account the nature and structure of the soils at different locations that could amplify the effect of the shake. Figure 30 and figure 31 shows the maps displaying the geological and topographic site effects coefficients across the Island respectively. The local PGA can be readily calculated using the following formula:

$$PGA_{local} = PGA_{regional} * C_{geo} * C_{topo} \tag{4.1}$$

Where C_{geo}=Geological Site Effect and C_{topo}= Topographic Site Effect

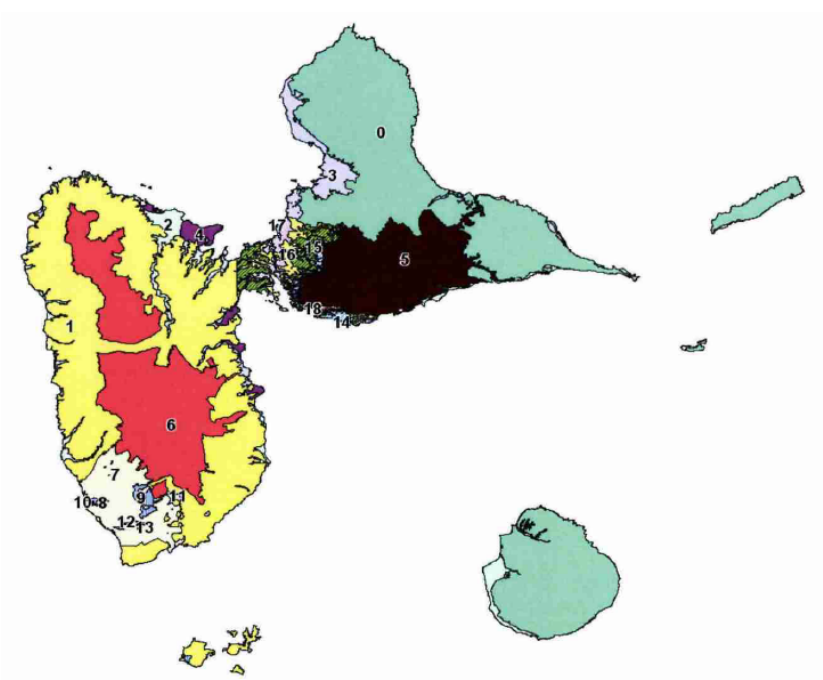

ID	Geological coefficient
0	1.00
1	1.10
2	1.05
3	1.60
4	1.50
5	1.00
6	1.10
7	1.10
8	1.15
9	1.23
10	1.38
11	1.38
12	2.15
13	1.85
14	1.00
15	1.23
16	1.60
17	1.50
18	1.50

Figure 30. Lithological Site Effect Coefficient for the Guadeloupe Island

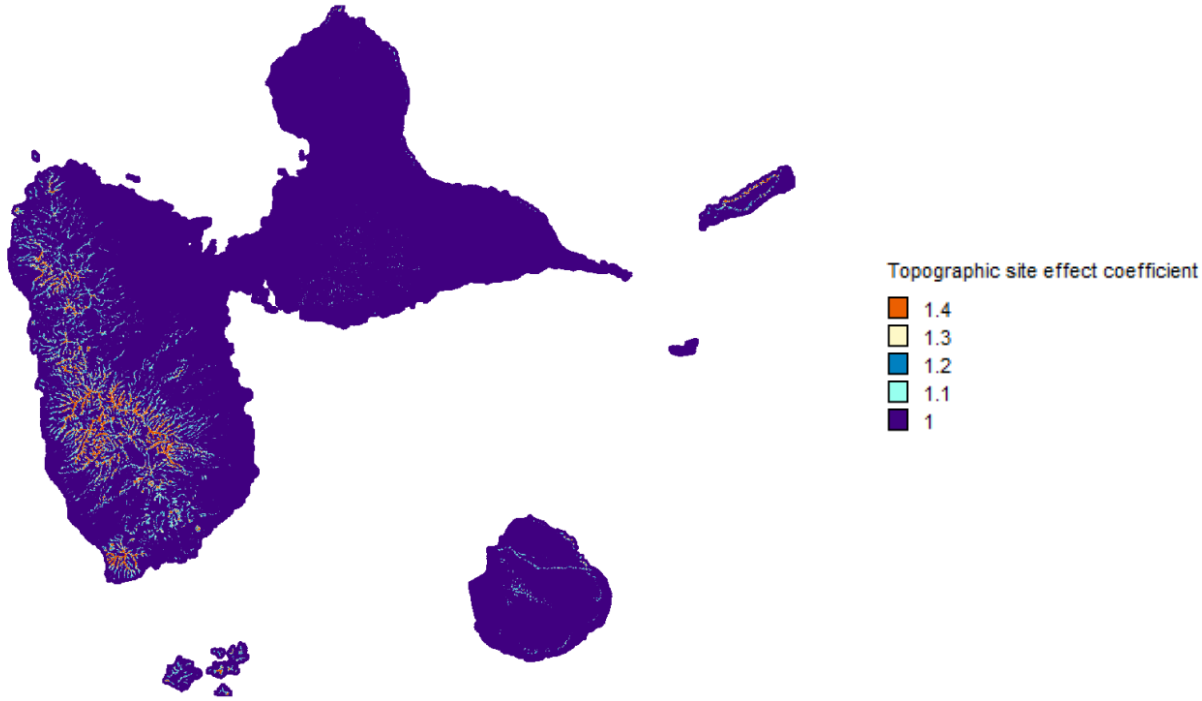

Figure 31. Topographic Site Effect Coefficient

The next step is to calculate the seismic intensities for different parts of the Island because they are required inputs in finding infrastructure damages in the next section. Since the method calls for seismic intensity instead of PGA, the relationship developed by Wald eh al. [12] is adopted for low seismic intensities (I<V) calculation, while the Atkinson and Sonley [13] method is adopted for high intensities (I ≥V). The formulas are shown below:

$$I = 7.58 + 2.20\log(PGA)\ for I < V \tag{4.2}$$
$$I = 10.18 + 4.35\log(PGA)\ for I \geq V \tag{4.3}$$

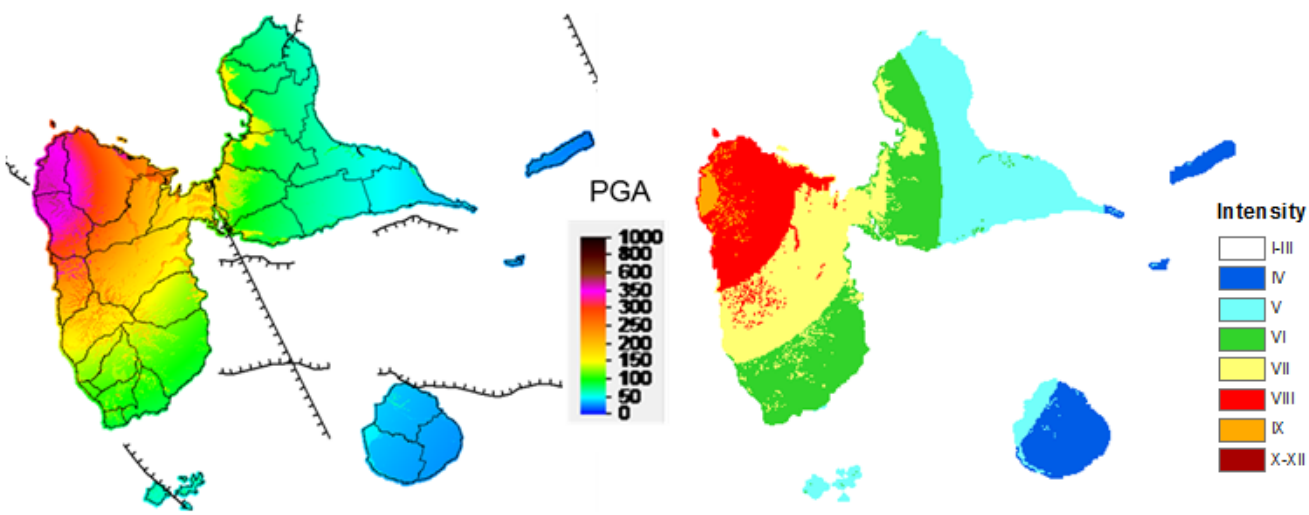

Figure 32. Local PGA (left) and Seismic Intensities (Right) for the Chosen Scenario

Figure 32 displays the earthquake magnitude in both ground peak acceleration and Richter scale intensity.

4.2.2 Landslide Scenario

The model used for landslide assessment is based on the soil slope stability analysis. [14] The method consists of analyzing the forces applied on a sliding body along a potential slip surface. The overall measure of its stability is through a safety factor in equation 4.4. In essence the sliding body is divided into slices and forces exerted on each slice are taken into account as shown in figure 33. A sliding body with a safety factor that is smaller than 1 is deemed unstable. For the purpose of this project the Morgenstern and Price method is used to compute the safety factor. [15]

$$SF = \frac{soil\ shear\ strength}{shear\ strength\ required\ for\ equilibrium} \tag{4.4}$$

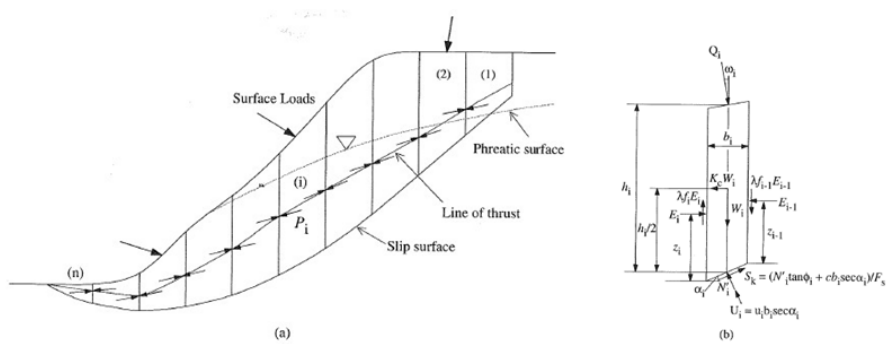

Figure 33. Landslide Calculation Approach (a) Sliding body (b) Typical Slice

The calculation of the safety factor requires geometric data of the hill slope and the soil's shear strength as well as water pressure. Since an earthquake triggered the scenario under study the GPA is also required in the safety factor calculation. Seismic movements exert horizontal forces that would be considered as static forces in the landslide model. The forces are proportional to the seismic coefficient and the weight of the sliding bodies. For the purpose of this project these forces are assumed to be half of the PGA calculated in the previous section.

The slope stability test is performed on road RD23, which is a vital component in the transportation system. It is the only road that connects the east and west side of the Island (Figure 34). This stretch of road is prone to landslide due to its geological structure and heavy rainfall. The landslide simulation performed assumed an average autumn precipitation condition as well as a static liquid pressure having a piezometric level placed 2 meter below the surface. As calculated in the earthquake scenario, the PGA along RD23 is 300mg, which corresponds to a seismic coefficient of 0.15. The simulation is conducted in a software environment called ALICE and it revealed that the western part of the road would be unstable, which in turn translated to the road being closed during disaster response. [16] Figure 35 shows the landslide study results where the highlighted areas are regions where the safety factors are smaller than 1.

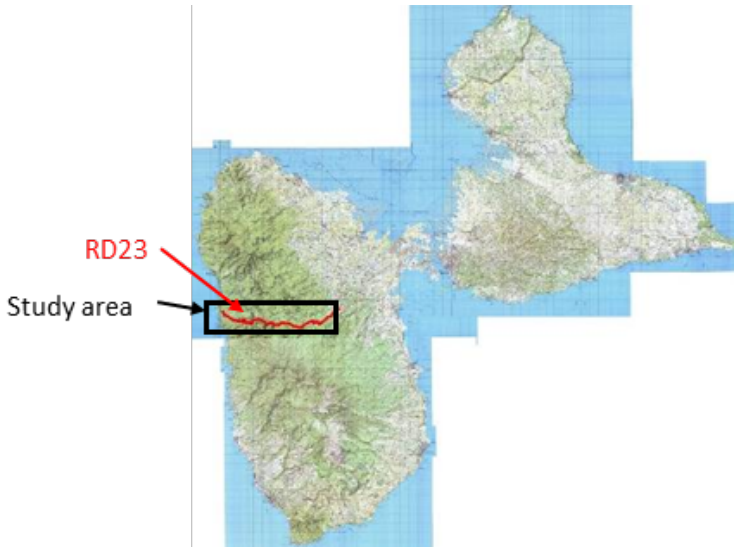

Figure 34. Area of Interest for the Landslide Study

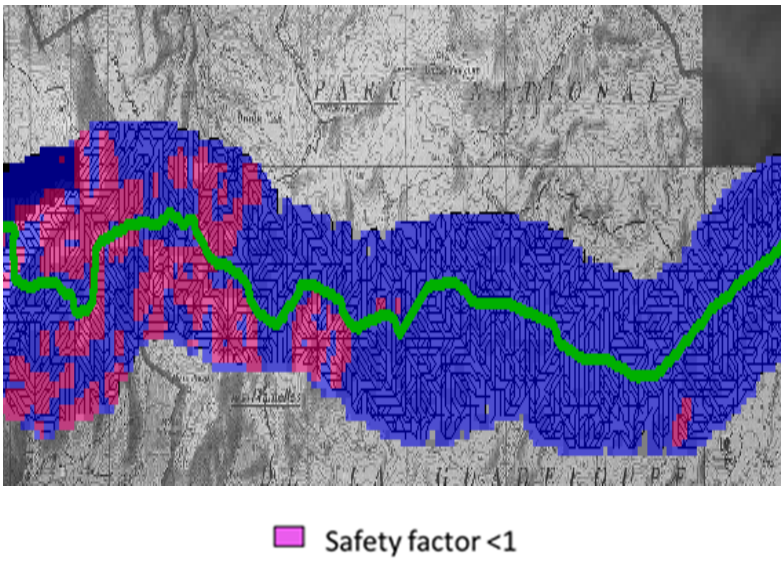

Figure 35. Landslide Simulation Results for Road Segment RD23

4.2.3 Infrastructure Damage Assessment

The accurate approach for vulnerability assessment of an infrastructure requires specific structural analysis of that particular structure. Due to the number of infrastructures involved in the study this approach is not feasible. Instead, the evaluation of infrastructures in a regional scale is based on statistical and probabilistic vulnerability functions. These functions represent the behaviour of the collection of infrastructures limited to a number of physical parameters. This is the basis of the RISK-UE methodology. [17]

Figure 36. Example of delimitation of the homogenous urban areas [20]

The method defines areas where collections of buildings are grouped into homogeneous urban areas (Figure 36) and building types are assigned according to 15 types of infrastructures defined in the RISK-UE methodology. Aerial pictures are used in order to determine the types of buildings that are present in an area. Combined with field surveys we were able to establish the distribution of different types of buildings in each urban area. The age of buildings were estimated using different topographic map editions since updated versions display new buildings in each area.

Given the above information, a vulnerability index (Vi) is defined for each building type as shown in figure 37. The Vi is used to calculate the mean damage grade (μ_D), which defines the level of damage a type of building is most likely to exert given a seismic intensity.

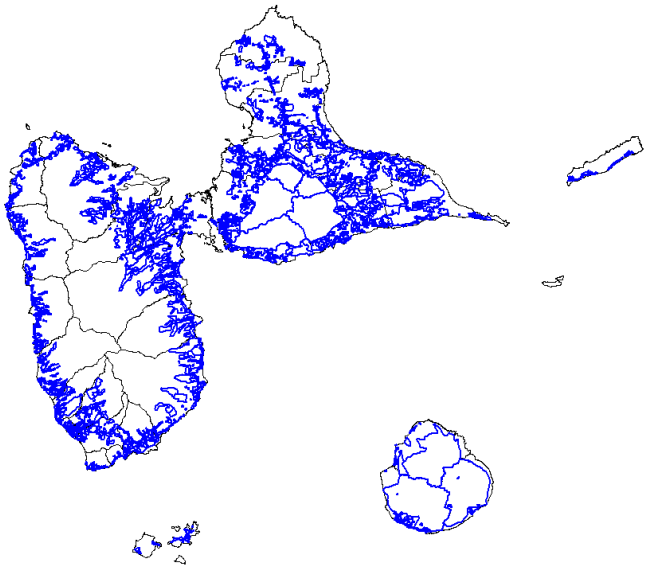

Type	Vi_final
HABFOR	1.00
MCPIER	0.94
CASTRA	0.50
VIBOIS	0.45
MCVIEU	0.78
VDR0R1	0.70
VDR2R2	0.76
VDR1PI	0.85
VDR2PI	0.90
LOTSOA	0.80
LOTSOR	0.62
COLBAN	0.51
COLPPB	0.67
COLBAT	0.84
COLURB	0.75

Figure 37. Urban Zone defined on the Island (Left) and Vulnerability Indices for Different Building Types (right)

The mean damage grade is calculated using formula 4.5 below, where V_I is the vulnerability index and I is the seismic intensity. Figure 38 shows the plot of $\mu_D$for different seismic intensities for different types of buildings.

$$\mu_D = 2.5\left[1 + \tanh\left(\frac{I + 6.25\,V_I - 13.1}{2.3}\right)\right] \tag{4.5}$$

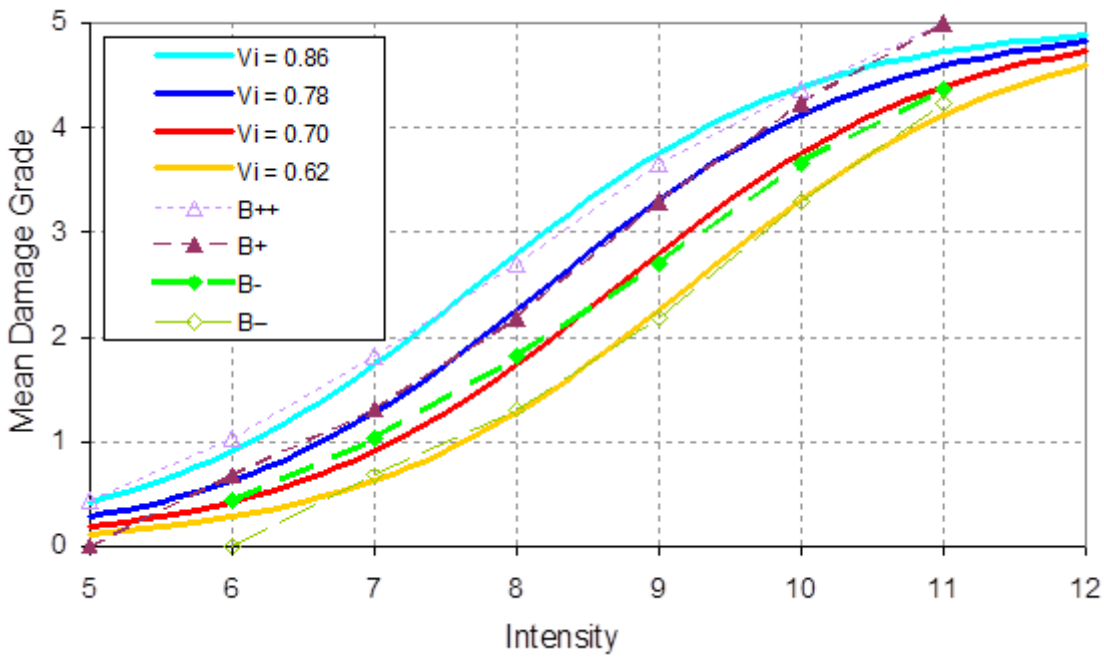

Figure 38. RISK-UE Modeling of Mean Damage Grade for Vulnerability Indices

The mean damage grade is derived from the European Macroseismic Scale, which contain 5 grades of structural damages. An example is shown in figure 39 for two different types of buildings. [19] The grades provide references for the operability of the structure. Given the mean damage grade it is possible to calculate the probability of all 5 grades of damages for a certain type of building. The probability density function defined by RISK-UE is shown below. [25]

Probability Density Function: $P_\beta = \frac{\Gamma(t)}{\Gamma(r)\Gamma(t-r)} \frac{(x-a)^{r-1}(b-x)^{t-r-1}}{(b-a)^{t-1}} \quad a \le x < b$

$$a = 0, b = 6, t = 8\; r = t(0.007{\mu_D}^3 - 0.052{\mu_D}^2 + 0.2875\mu_D) \tag{4.6}$$

Survival Function: $S(x) = 1 - P_\beta = 1 - \int_a^x p_\beta(\varepsilon)d\varepsilon$ (4.7)

Figure 40 displays the probability density function for $\mu_D = 3$. The blue curve is the plot of equation 4.7. It is the survival function and it represents the probability of damages exceeding each grade.

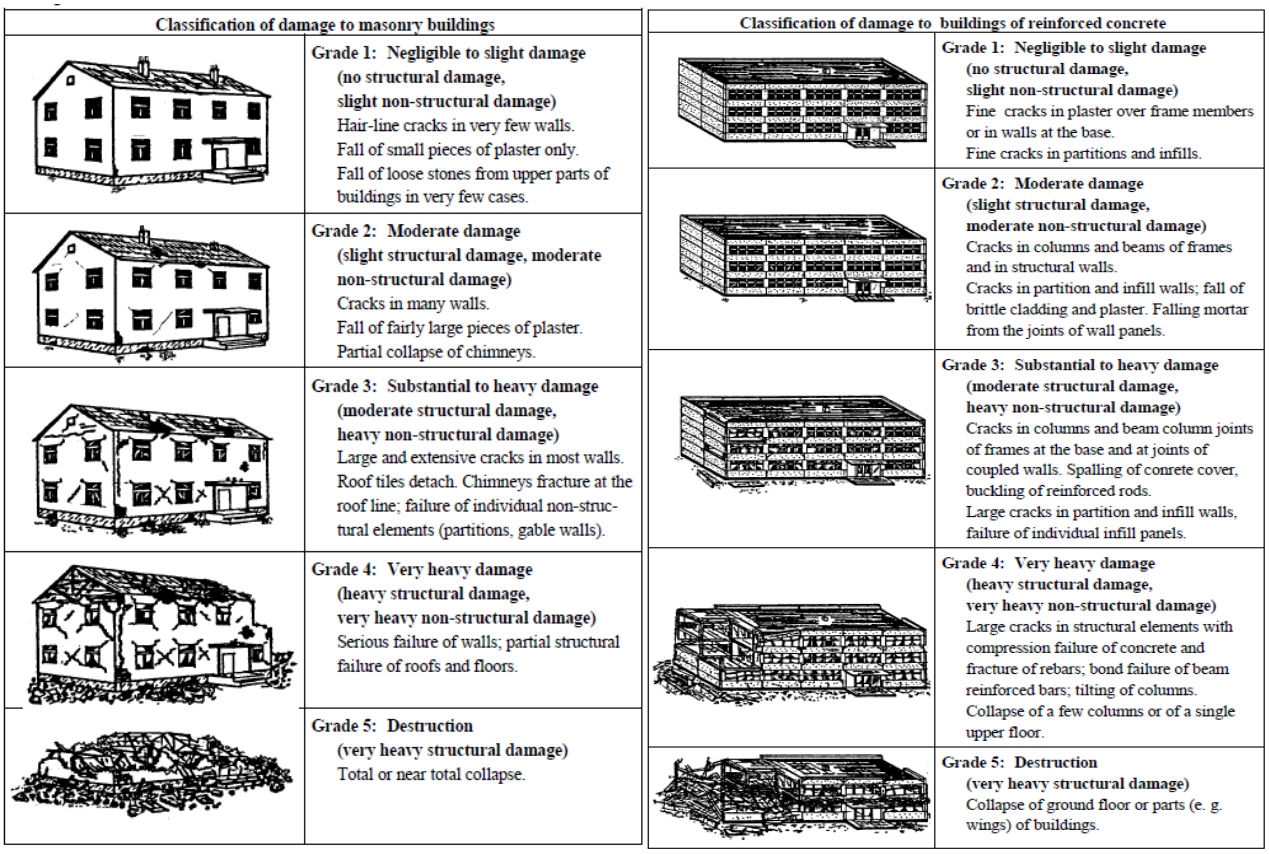

Classification of damage to masonry buildings	
	Grade 1: Negligible to slight damage (no structural damage, slight non-structural damage) Hair-line cracks in very few walls. Fall of small pieces of plaster only. Fall of loose stones from upper parts of buildings in very few cases.
	Grade 2: Moderate damage (slight structural damage, moderate non-structural damage) Cracks in many walls. Fall of fairly large pieces of plaster. Partial collapse of chimneys.
	Grade 3: Substantial to heavy damage (moderate structural damage, heavy non-structural damage) Large and extensive cracks in most walls. Roof tiles detach. Chimneys fracture at the roof line; failure of individual non-structural elements (partitions, gable walls).
	Grade 4: Very heavy damage (heavy structural damage, very heavy non-structural damage) Serious failure of walls; partial structural failure of roofs and floors.
	Grade 5: Destruction (very heavy structural damage) Total or near total collapse.

Classification of damage to buildings of reinforced concrete	
	Grade 1: Negligible to slight damage (no structural damage, slight non-structural damage) Fine cracks in plaster over frame members or in walls at the base. Fine cracks in partitions and infills.
	Grade 2: Moderate damage (slight structural damage, moderate non-structural damage) Cracks in columns and beams of frames and in structural walls. Cracks in partition and infill walls; fall of brittle cladding and plaster. Falling mortar from the joints of wall panels.
	Grade 3: Substantial to heavy damage (moderate structural damage, heavy non-structural damage) Cracks in columns and beam column joints of frames at the base and at joints of coupled walls. Spalling of conrete cover, buckling of reinforced rods. Large cracks in partition and infill walls, failure of individual infill panels.
	Grade 4: Very heavy damage (heavy structural damage, very heavy non-structural damage) Large cracks in structural elements with compression failure of concrete and fracture of rebars; bond failure of beam reinforced bars; tilting of columns. Collapse of a few columns or of a single upper floor.
	Grade 5: Destruction (very heavy structural damage) Collapse of ground floor or parts (e. g. wings) of buildings.

Figure 39. Description of Damage Grade for Masonry and Reinforced Concrete Buildings

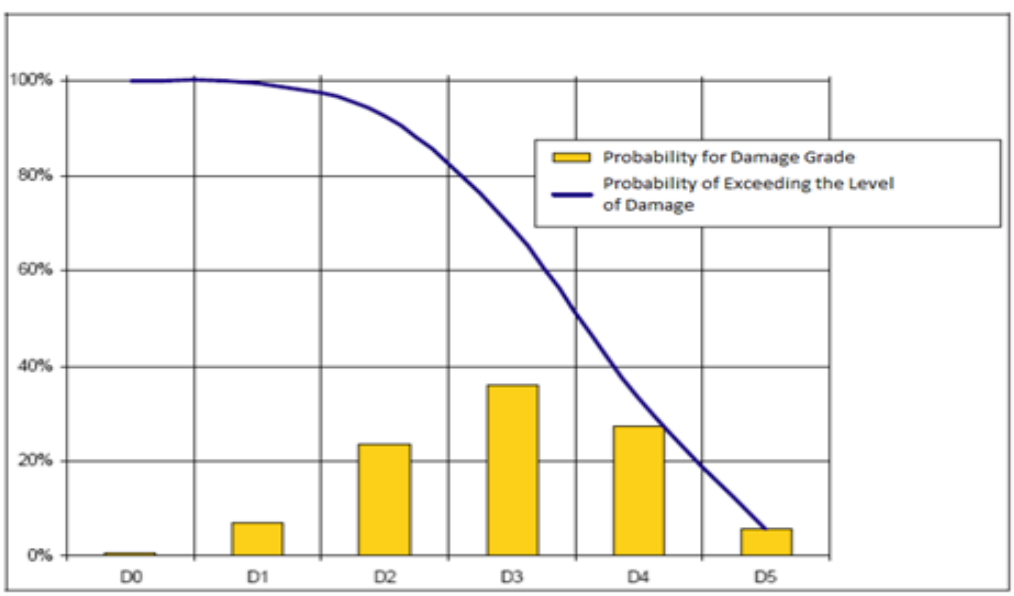

Figure 40. Distribution of Damage Grades for $\mu_D = 3$

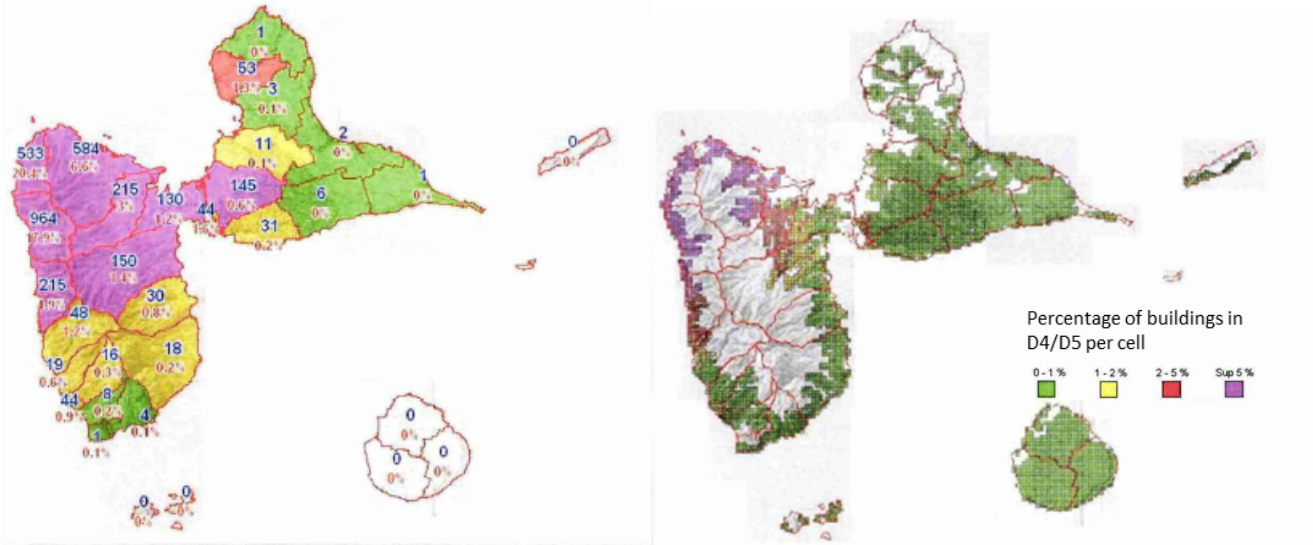

Figure 41. Damage Assessment Simulation Results

Following the described RISK-UE methodology, the number of critically damaged (grade D4 and D5) buildings on the Island can be simulated and plotted on the map on the left in figure 41. The map in the right side of the figure shows the projection of damages on a grid with 500 x 500 meter squares.

The next step is to determine how much of the population is directly affected by the damaged infrastructures. The inhabitants in each urban zone were generated by distributing people into different types of buildings according to the data from INSEE. (French National Institute for Statistic) [19]. The number of people per building for each type of building was estimated based on field observation and height of buildings. By using the matrix in figure 42, which relates the damage levels of a building to the number of affected people, it is possible to estimate the amount of injured people in each area. The severity of the injuries adopted for this method is shown in table 10. The distributed injury population is shown in figure 43.

	D0	D1	D2	D3	D4	D5
P0	1	0.999807	0.99825	0.9725	0.765	0.18
P1	0	0.000165	0.0015	0.025	0.2	0.34
P2	0	0.000022	0.0002	0.002	0.03	0.13
P3	0	0	0	0	0	0.13
P4	0	0.0000055	0.00005	0.0005	0.005	0.22

Figure 42. Human Casualties Corresponding to Building Damage Grade

Injury Index	Severity
P0	No Injury
P1	light injuries
P2	severe injuries
P3	severe injuries and trapped
P4	deaths

Table 10. Severity of Injuries

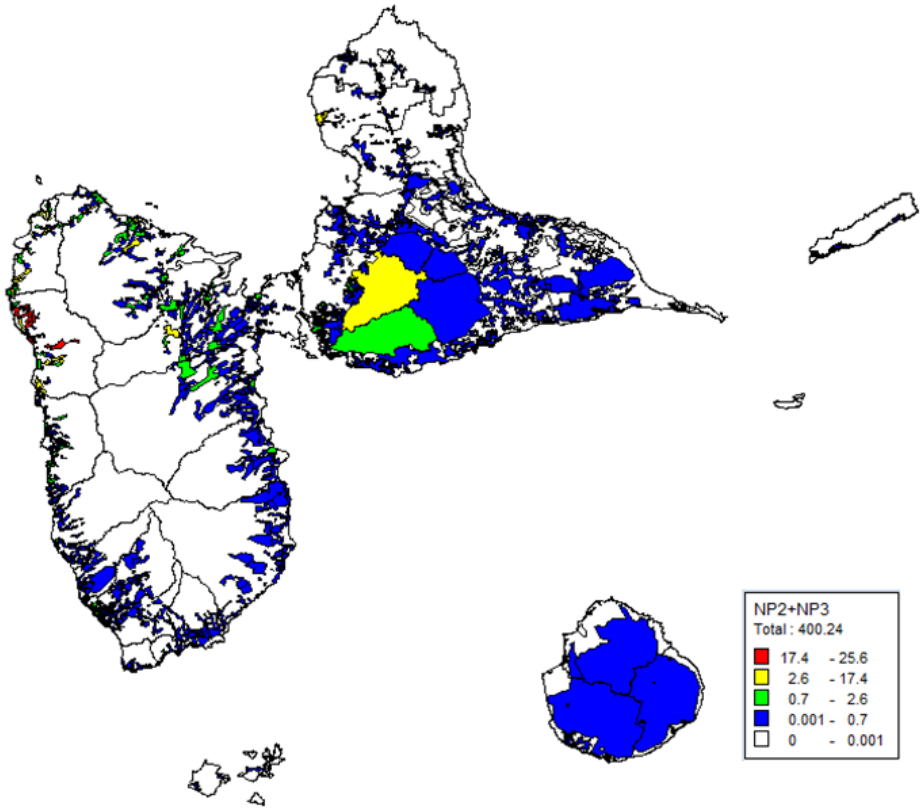

Figure 43. Injury Population Distribution

4.2.4 Lifeline Damage Assessment

The damages to the lifelines of the Guadeloupe Island were based on the damage report from section 4.2.3 as well as following the SYNER-G methodology. [21] SYNER-G defines fragility curves for different elements of different systems at different earthquake intensities. Since the locations of critical infrastructures are known, the levels of damages were estimated and summarized in figure 44. Damages to substations, water stations and hospitals were divided into 5 levels to correspond to the 5 Physical Modes in I2Sim. Power stations were simplified to either working or not working. What are not shown in the figure are the physical condition of road segments as well as the levels of congestions. This information is included in Appendix A.

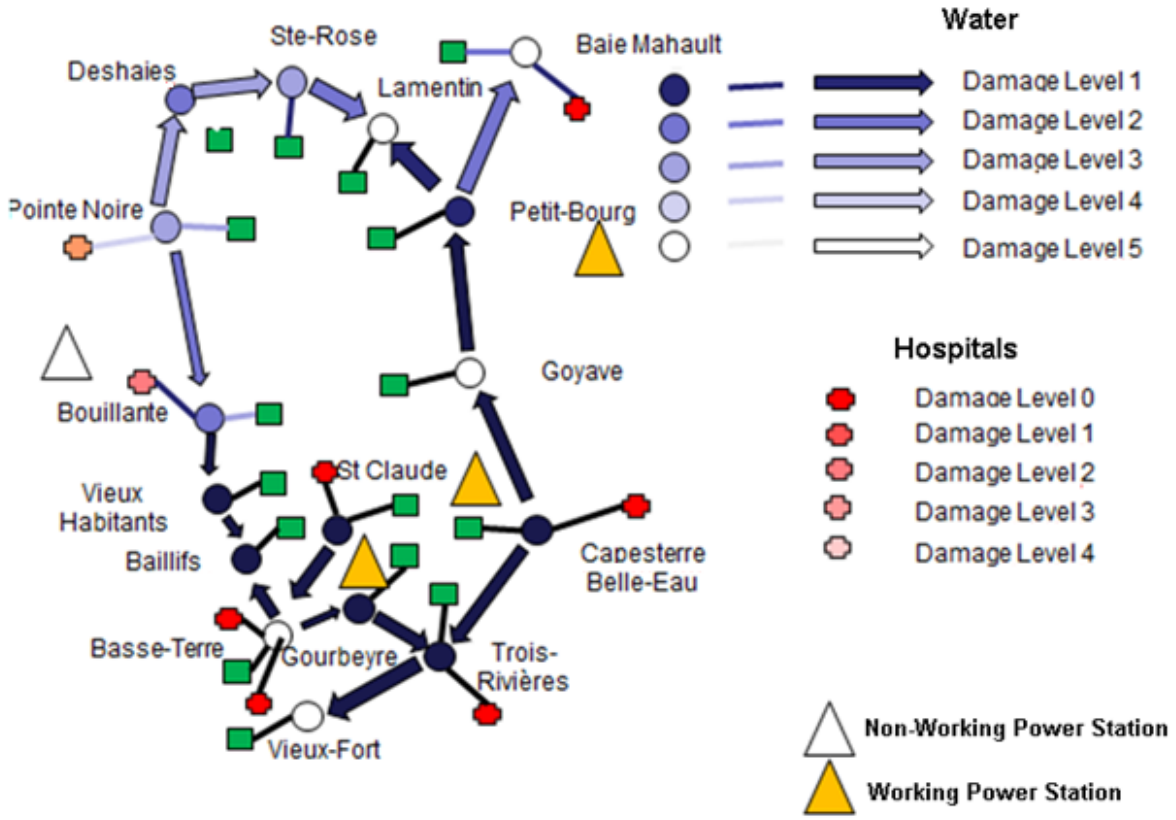

Figure 44. Damage to Life Line of Guadeloupe Island

4.2.5 Data Collection for I2Sim Modeling Components

A large amount of information was needed to populate the cells in the I2Sim model. Human readable tables were created based on several assumptions and hypothesis. The sources of information include literatures, statistics and expert judgements. Due to time constraints and limitations, no formal requests were sent to the different network providers.

The constructions of HRTs for residential areas was based on data of average consumption per inhabitant during non-disaster scenarios. The electrical and water needs were mainly collected through different publications. [17] According to the PREPURE report, the overall consumption of energy in 2006 for the residential section of the island was 808Gwh, for which 81.93% is electricity (6662Gwh). This represented a yearly average consumption of 1.76 MWh/year/inhabitant (1.44MWh/year/ inhabitant). Translating that into a daily basis, the electricity need was 3.95kWh/day which corresponded to an average consumption of 165W.

The average water needs per inhabitants was not homogenous across the Island. According to Bonnel's analysis, the daily consumption per capita for each town ranged from 0.152Litre/inhabitant/day to 0.264Litre/inhabitant/day. The complete list of water consumption for each town is shown in table 11. The HRTs were constructed based on the amount of

resources sent to the towns, which translated to how much of the population is accommodated at the output.

Town	water needs/habitants (m3/inhabitants/day)
Vieux fort	0.152
Trois-rivière	0.247
Capesterre	0.236
Goyave	0.236
Petit Bourg	0.236
Lamentin	0.164
BaieMahaut	0.236
Sainte-Rose	0.264
Deshaie	0.237
Pointe-noire	0.177
Bouillante	0.177
Vieux habitants	0.177
Baillif	0.195
Saint Claude	0.195
Basse-Terre	0.195
Gourbeyre	0.195

Table 11. Water Consumption by Town for Guadeloupe

The hospital's needs were based on average consumption per bed, while treatment capacity was said to be 3% of the total number of beds. The treatment speed for a seriously injured patient is 2 hours and one bed in an operating room requires 1kL of water and 24kW or electricity. [23] The data for water production and the number of water sources were also gathered from the Bonnel report. [18] It also stated that in order to pump 1KL/hour of water it required 18.2W of electricity.

Information regarding water station capacity and water transfer between stations were from the Bonnel report as well. [18] It stated that in order to pump 1 KL of water per hour it required 18.2 W of electrical which was based on the formula below relating hydraulic power and water flow.

$$P_w = \frac{\rho g H}{3600} \times Q = \frac{1000\ 9.81\ H}{3600} \times Q \tag{4.8}$$

P_w =Hydraulic Power (Mechanical)

ρ = Density of Water= (1000 kg/m^3)

g= Gravity= (9.81 m/s^2)

H= Height of Pumping= 5 meters

Q= flow (in kl/h)

η= Mechanical efficiency=75%

Electrical power can be calculated using the following formula. This method neglect power consumption of other facilities that exist at a water station.

$$P_{elec} = \frac{P_w}{\eta} = \frac{\rho g H}{3600 \times \eta} \times Q = 18.2 \times Q \tag{4.9}$$

Information such as location of infrastructures and connection between substations as well as plant capacities was gathered through a previous project where the data was stored in a geographic information system file. [24] Also included in the scope of that project was the transportation network of the Island, which included speed limit, and length of different roads. Once all data was collected and the I2Sim model was constructed. All of the data used in the I2Sim model are shown in Appendix B.

4.3 I2Sim Model of the Guadeloupe Island

The Guadeloupe Island model in I2Sim contains several key systems. These systems include electrical, water, transportation, health care and residential. The following sections describe the construction of the systems in detail.

4.3.1 Electrical System

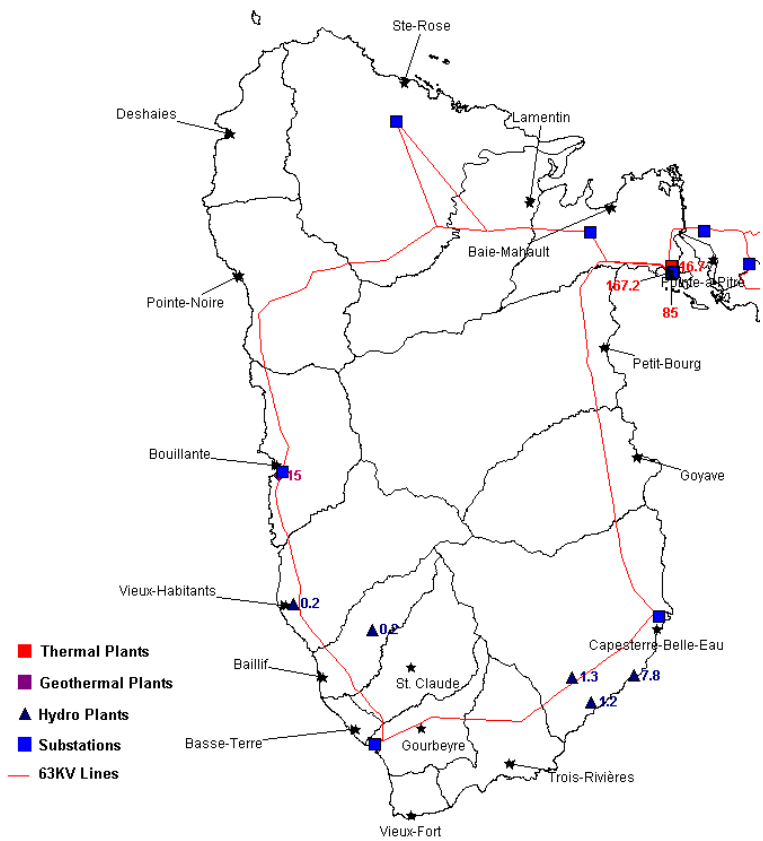

Figure 45. Electrical System of the Guadeloupe Island

There are a total of nine generating stations in Guadeloupe (Figure 44), including plants such as hydro, thermal and geothermal. A Production Cell represents each power station with an associated HRT. Resource Mode 1 of the HRT represents the full capacity of each station with each following Resource Mode operating at 25% less compared to the previous mode. The output for Bouillante geothermal station is shown in table 12.

Physical Mode	Output Power (MW)
1	15
2	11.25
3	7.5
4	3.75
5	0

Table 12. Power Output of Bouillante Geothermal Station

The nine power stations are connected to six different substations by 63 KV transmission lines but not all substations are directly connected to a power source. For example the Hydro stations in Baillif and Vieux-Habitants are feeding the Gourbeyre substation whereas the Ste-Rose substation requires power sent from other substations connected to it. Each substation is connected to at least two other substations for transmission of power under different scenario studies. In a similar fashion the substations are modeled with Production Cells with HRTs for five different Physical Modes shown in Figure 46.

MW output	MW Input
15000	15000
11250	11250
7500	7500
3750	3750
0	0

MW output	MW Input
11250	11250
7500	7500
3750	3750
0	0

MW output	MW Input
7500	7500
3750	3750
0	0

MW output	MW Input
3750	3750
0	0

MW output	MW Input
0	0

Figure 46.Human Readable Tables for Bouillante Substation

The distribution of power is accomplished by controlling the Distributor at the output of substations. Part of the electrical system is shown in figure 47 which shows three hydro plants connected to the Capesterre-Belle-Eau substation. The aggregator connected to the substation cell allows transmission of power to the substation. The distributor has the ability to send power to the nearby town, hospital and water station as well as other substation when required. The complete electrical network is shown in figure 48.

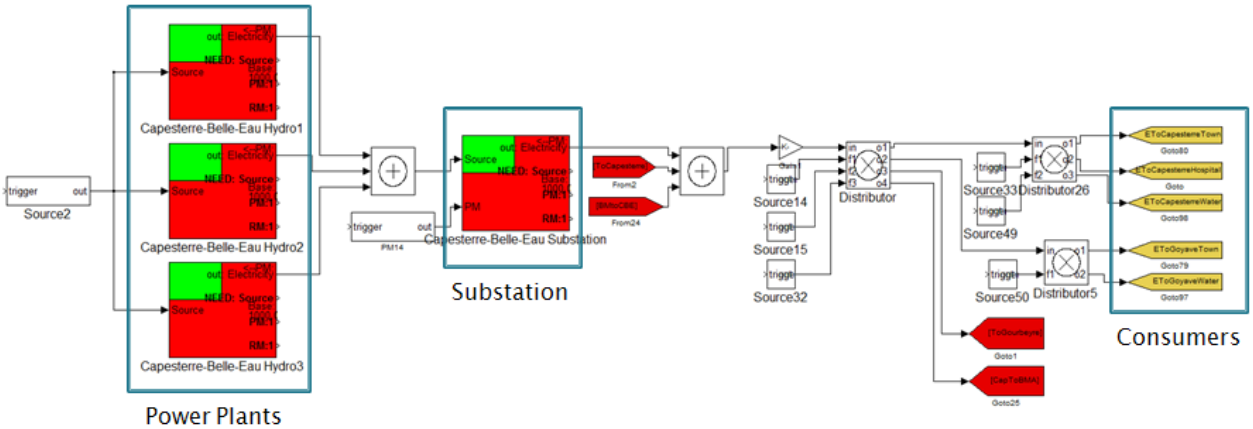

Figure 47.Electrical Power Generation and Distribution for Capesterre-Belle-eau Substation

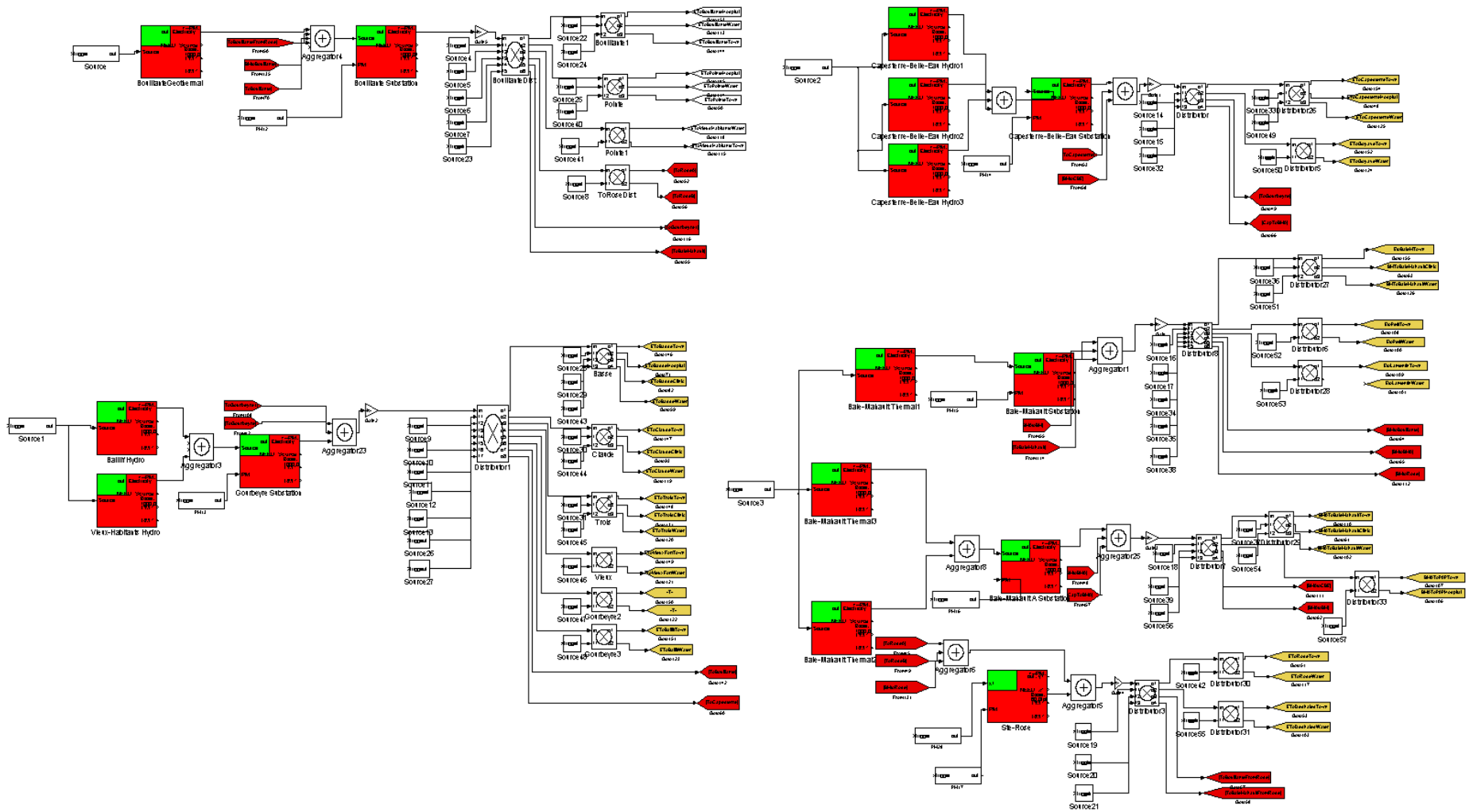

Figure 48. Electrical Network of Guadeloupe Island Model

4.3.2Water System

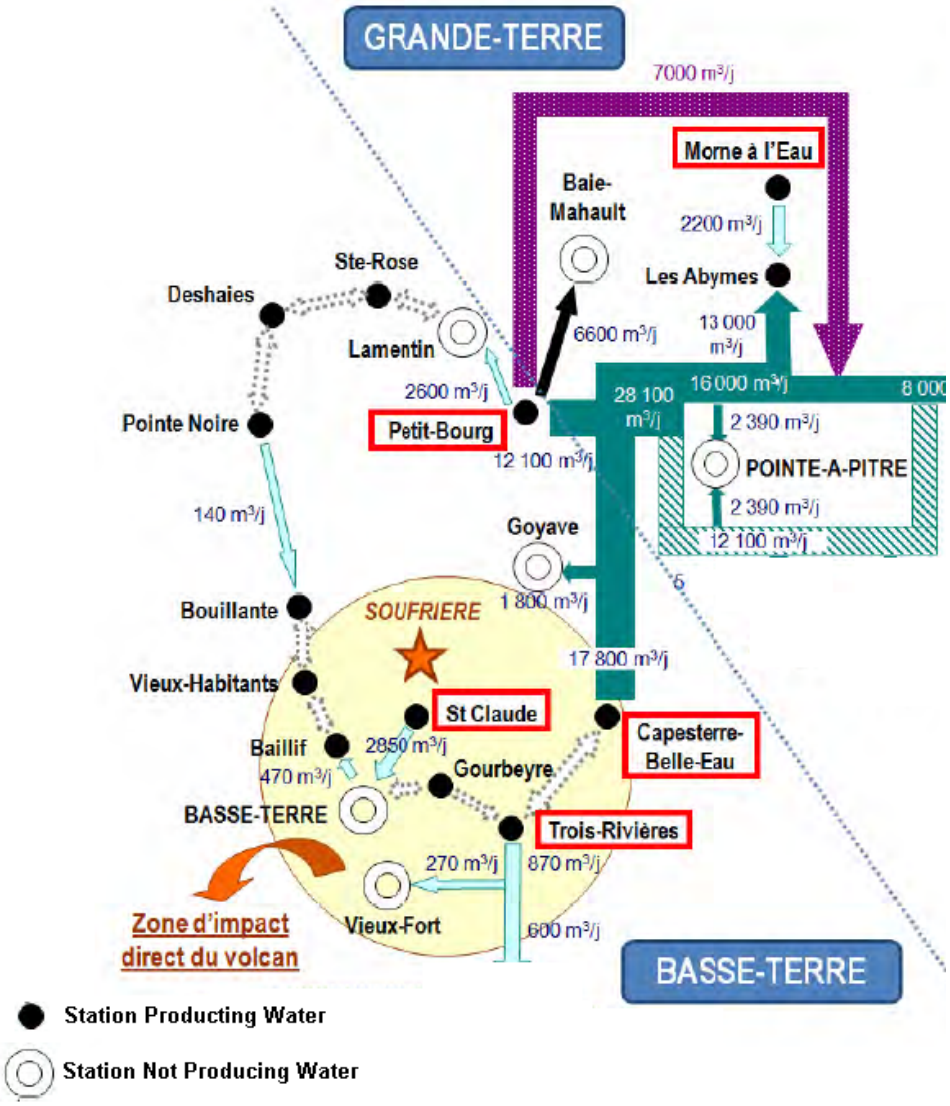

Figure 49. Water Network Overview for the Guadeloupe Island

The above figure shows an overview of the water network of the Island. The white arrows show connections between water stations where as the blue arrows signifies water transfer between water stations. Similar to the infrastructures in the electrical system, water stations are represented by Production Cells. The inputs of the cell include an unlimited water source and electricity supplied by nearby substations. An example of a water station HRT is shown in figure 50 having five Physical Modes. The output of the water station is the same as the input given enough electricity is supplied to the station while neglecting losses. Another component of the water system is the water pipe, which is modeled by the Channel cell with an associated HRT for losses shown in table 13. Figure 51 shows the water station of Deshaies and the complete water network can be seen on the following page.

Water output (KL/h)	KW Input	Water Input (KL/h)
80.9	1.5	80.9
60.7	1.1	60.7
40.5	0.7	40.5
20.2	0.4	20.2
0	0	0

Water output (KL/h)	KW Input	Water Input (KL/h)
60.7	1.1	60.7
40.5	0.7	40.5
20.2	0.4	20.2
0	0	0

Water output (KL/h)	KW Input	Water Input (KL/h)
40.5	0.7	40.5
20.2	0.4	20.2
0	0	0

Water output (KL/h)	KW Input	Water Input (KL/h)
20.2	0.4	20.2
0	0	0

Water output (KL/h)	KW Input	Water Input (KL/h)
0	0	0

Figure 50. Human Readable Table for Pointe-Noire Water Station

Physical Mode	Losses
1	0%
2	25%
3	50%
4	75%
5	100%

Table 13. Water Pipe Human Readable Table for Losses

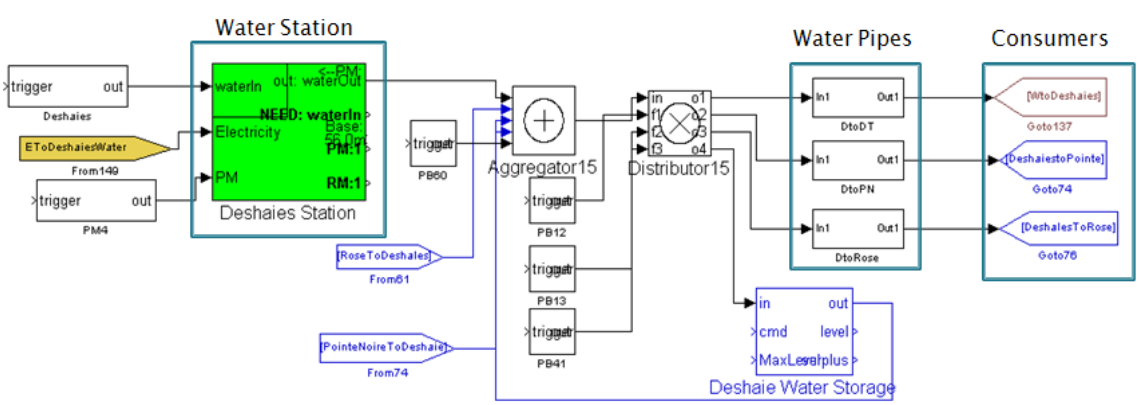

Figure 51. Deshaies Water Station Model in I2Sim

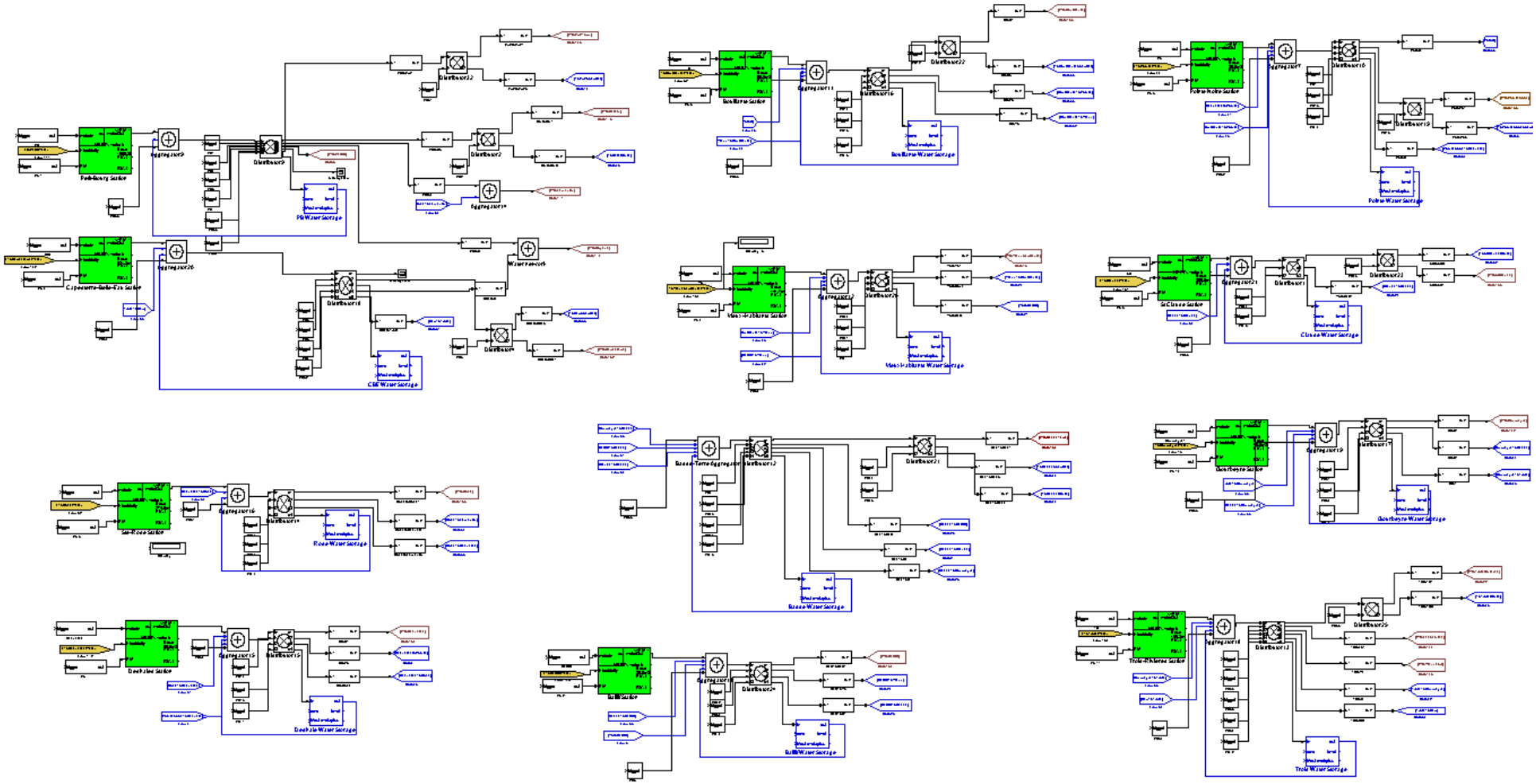

Figure 52. Water Network of Guadeloupe Island Model

4.3.3 Transportation System

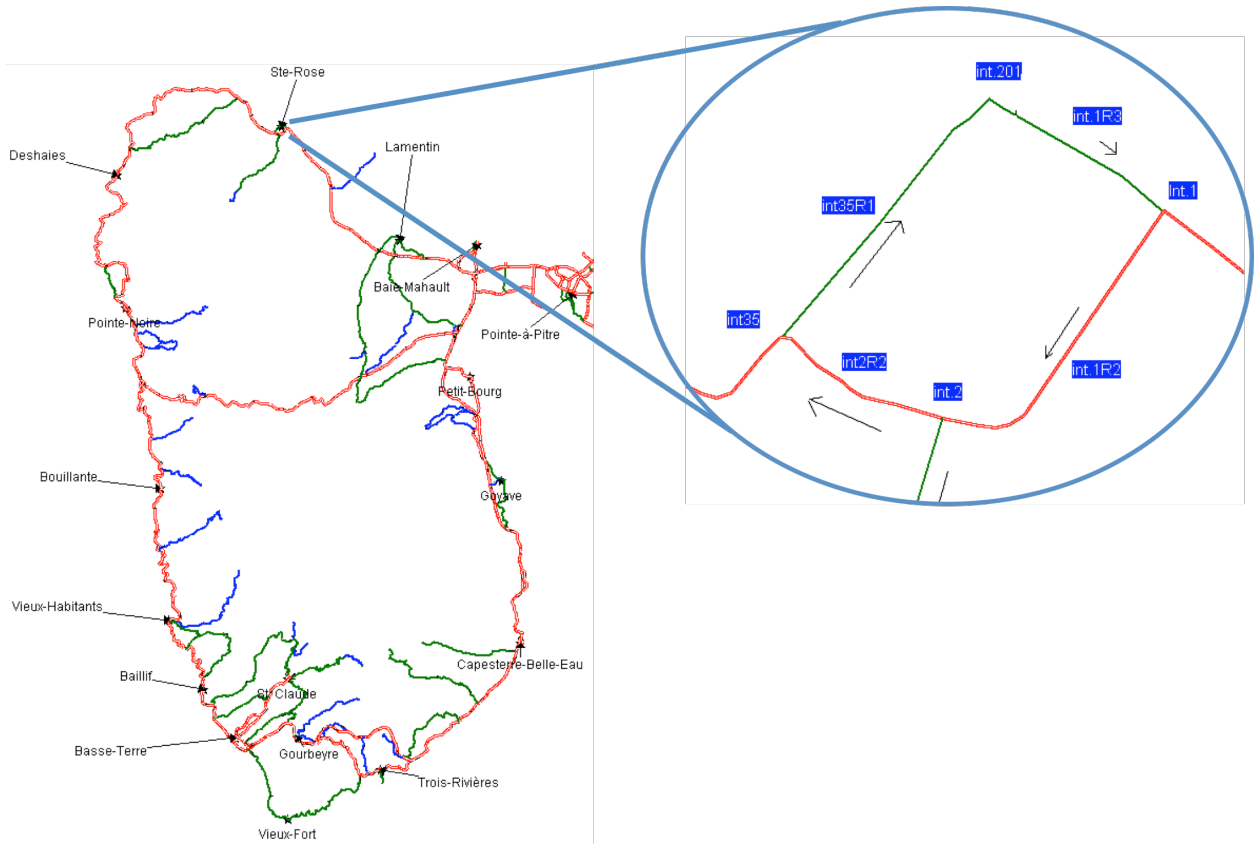

Figure 53. Road Network of Guadeloupe Island

There are two main components in the transportation system and they are roads and intersections. The Island has three different kinds of roads based on speed limit and they are shown in figure 53. Roads colored in red, blue and green represent speed limit of 90km/h, 80km/h and 50km/h respectively. Each road segment and intersection is assigned an ID and the direction of travel is identified for each road where the direction of the arrow is the “forward” traveling direction. A magnified view of a section of the road network is also shown in figure 53.

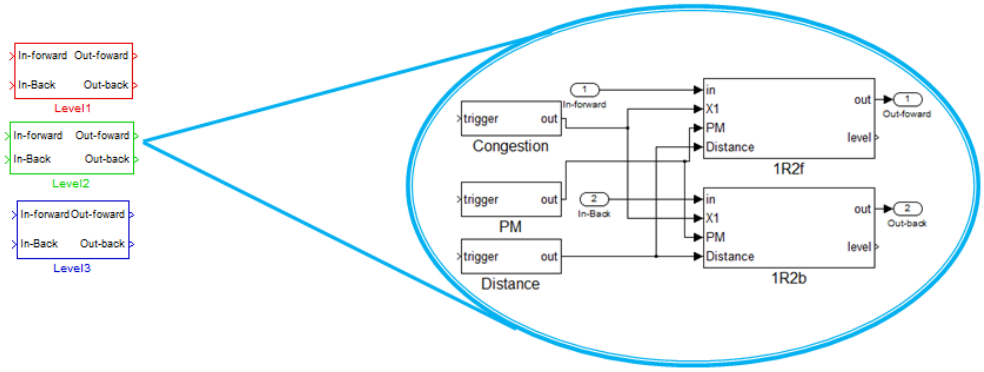

Figure 54. Road segment components in I2Sim

Road segments are modeled using Channel Cells, which have corresponding inputs of incoming vehicles, level of congestion, Physical Mode and the length of the road. Figure 54 shows the components of a road segment under its mask. As can be seen in the figure, there are two separate Channel Cells to simulate vehicles in both directions because the cell is unidirectional. Therefore the inputs to the overall road segment are “in-forward” and “in-back” with corresponding outputs of “out-forward” and “out-back”. The HRT for a level 1 road segment is shown in figure 55 containing three Physical Modes.

Delay (Minutes)	Congestion Level
0.86	1
1	2
1.5	3
3	4
6	5

Delay (Minutes)	Congestion Level
3	1
4	2
6	3
7.5	4
12	5

Delay (Minutes)	Congestion Level
∞	–

Figure 55. Human Readable Tables for Level 1 Road segments

Intersections are modelled using a combination of Distributors and Aggregators. (Figure 56) There are three different types of intersection cells based on the number of road connected to a particular intersection. For example a “4 way” intersection has 4 inputs representing the different directions a vehicle can enter the intersection. Vehicles entering from one direction have three possible directions of exiting hence each input is connected to a Distributor with three outputs. Distributor ratio acts as directional inputs and is updated through an external file. An example is given in table 14.

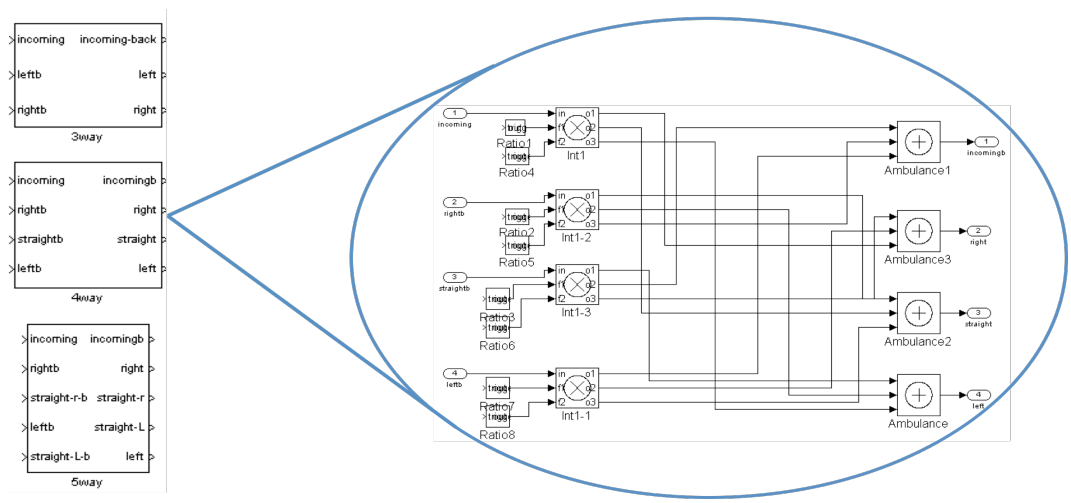

Figure 56.Types of Intersection Cell

Intersection ID	In-Coming Direction	Direction of Turning	Distributor Ratio
4	3R2	Right	0
	3R2	Straight	100
	4R1-back	Right	0
	4R1-back	Straight	0
	4R2-back	Right	0
	4R2-back	Straight	100
	4R3-back	Right	0
	4R3-back	Straight	0

Table 14. Intersection Control Table

The above table shows the control methodology for intersection 4 and the corresponding in-coming road segments are listed in column 2. For example if a vehicle travels on the road segment 3R2 and reaches intersection 4 it has three turning options: right, straight or left. If the vehicle needs to turn right then 100 needs to be entered into the Distributor ratio column on the row “Right” and similar if the vehicle needs to go straight. Note that if both the “Right” and “Straight” ratio for 3R2 is 0 then it means the vehicle decides to turn left. Same method applies to the other in-coming direction at intersection 4. Another point to note from table 14 is that “4R1-back” represents the direction of travel for 4R1 that is opposite to the “forward” direction defined in figure 31. This is the main theory behind the implementation of intersection control and it is used to guide vehicles to different point in the transportation system. A small section of the road network is shown in figure 57. The left of the figure shows the map of an intersection and the right shows its corresponding I2Sim model. Figure 57 on the next page displays the entire transportation network model in I2Sim.

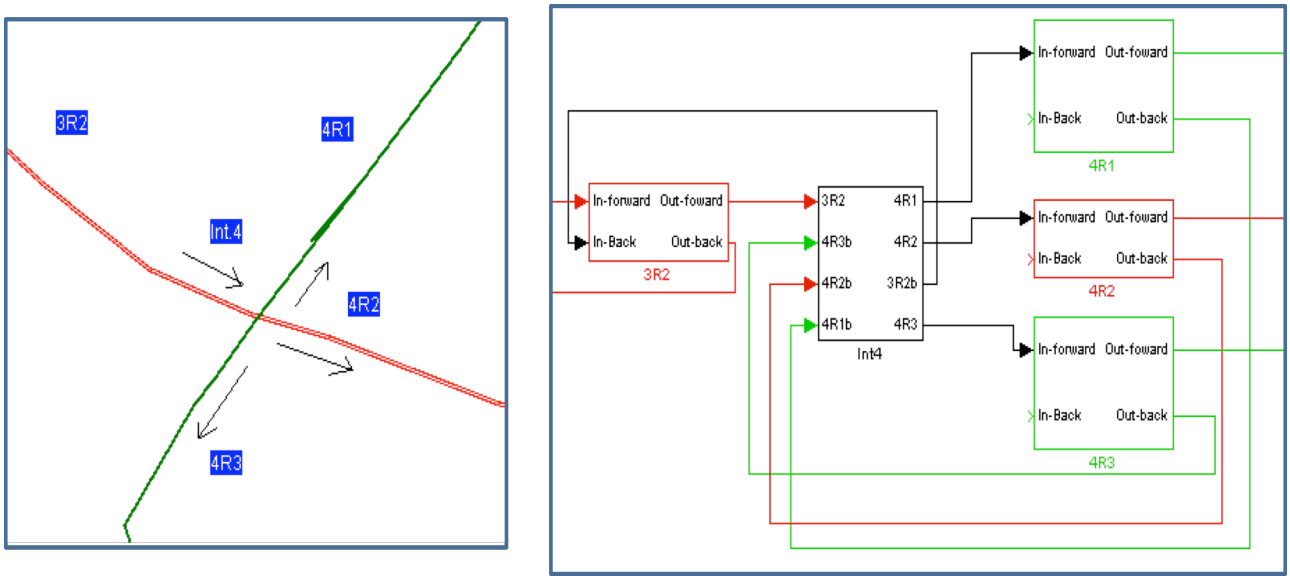

Figure 57. Intersection 4 represented in MapInfo and I2Sim

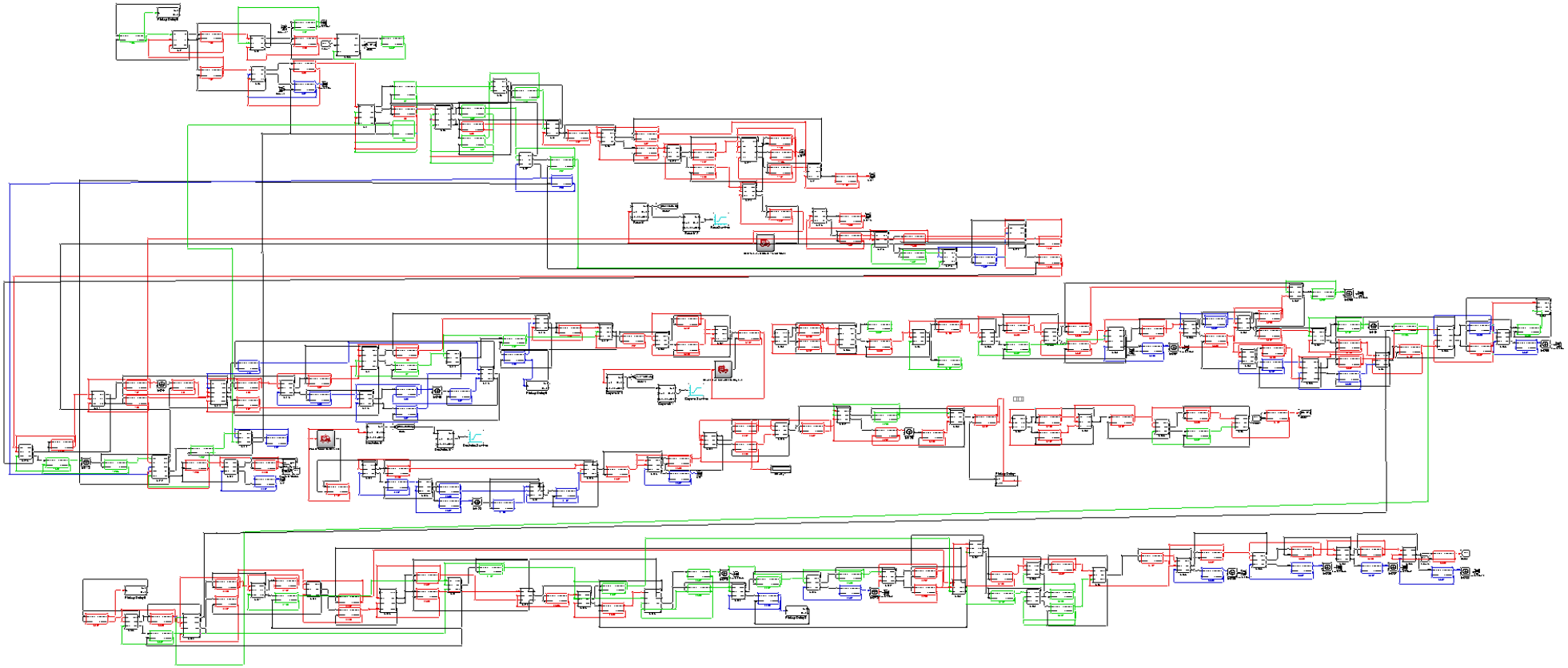

Figure 58. Transportation System Model in I2Sim

4.3.4Health Care System

There are a total of eight hospitals and clinics in the model and each infrastructure is represented by an emergency room and an accommodation area. The components of a hospital cell are shown in figure 59. Patients from the disaster areas are sent to the emergency rooms modeled by Storage Cells. The input of the Storage is the ambulances returning from the impact area carrying patients. This will be discussed further in the next section. The discharged patients from the emergency room are accommodated in the ward, which is also a storage cell. Two Production Cells represent functionality of the emergency room and the number of bed available in the accommodation given inputs of water and electrical as well as the Physical Mode of the hospital. The output of the emergency room Production Cell is the trigger to release patients from the Storage into the accommodation area. Similarly the Production Cell for the accommodation outputs the number of available beds in the hospital and dictates the maximum level of the accommodation Storage Cell. The previous version of I2Sim did not allow dynamic input for the maximum level of the Storage Cell. But this feature allows a more realistic approach because the hospital might not have enough beds to accommodate all the patients and the available number of beds can change due to many factors.

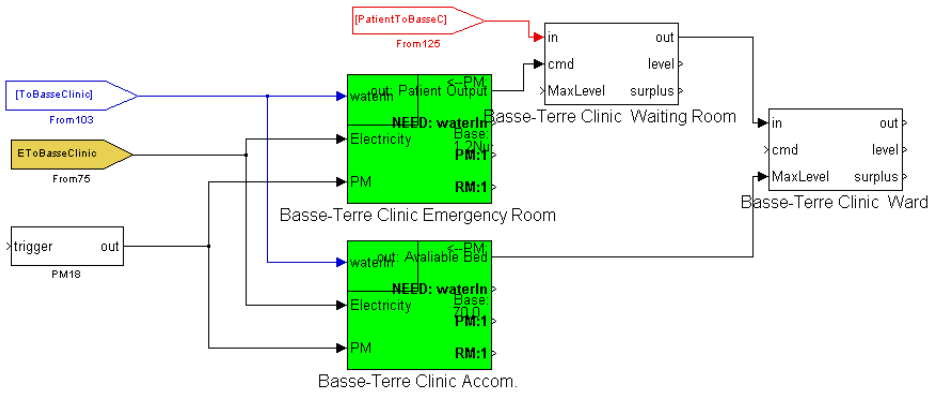

Figure 59. Basse-Terre Clinic Model Components

Basse-Terre Hospital Ward

Number of Beds	Water Input (Kl/h)	KW Input
252	164	1915
189	123	1436
126	82	958
63	41	479
0	0	0

Number of Beds	Water Input (Kl/h)	KW Input
126	164	1915
95	123	1436
63	82	958
31	41	479
0	0	0

Number of Beds	Water Input (Kl/h)	KW Input
0	0	0

Basse-Terre Hospital Emergency Room

Discharged Patients (/h)	Water Input (Kl/h)	KW Input
7.5	7.5	180
5	5	120
4	4	72
1	1	24
0	0	0

Discharged Patients (/h)	Water Input (Kl/h)	KW Input
3.75	7.5	180
2.5	5	120
1.5	4	72
0.5	1	24
6	0	0

Discharged Patients (/h)	Water Input (Kl/h)	KW Input
0	0	0

Figure 60. HRT of Emergency Room and Ward for Basse-Terre Hospital

The HRTs for the emergency room and the ward are shown in figure 60 each having three Physical Modes. The accommodation is an important component to the hospital model from a resource perspective as well. We can see from the HRT in figure 60 that the accommodation area requires significantly larger amount of resources compared to the emergency room. The hospital model has to consider more than just the emergency room's resource needs. The models of all the hospitals and clinics are shown in the figure below. Note that Trois-Rivières Clinic doesn't have the functionality to treat patients. It only has beds to accommodate survivors.

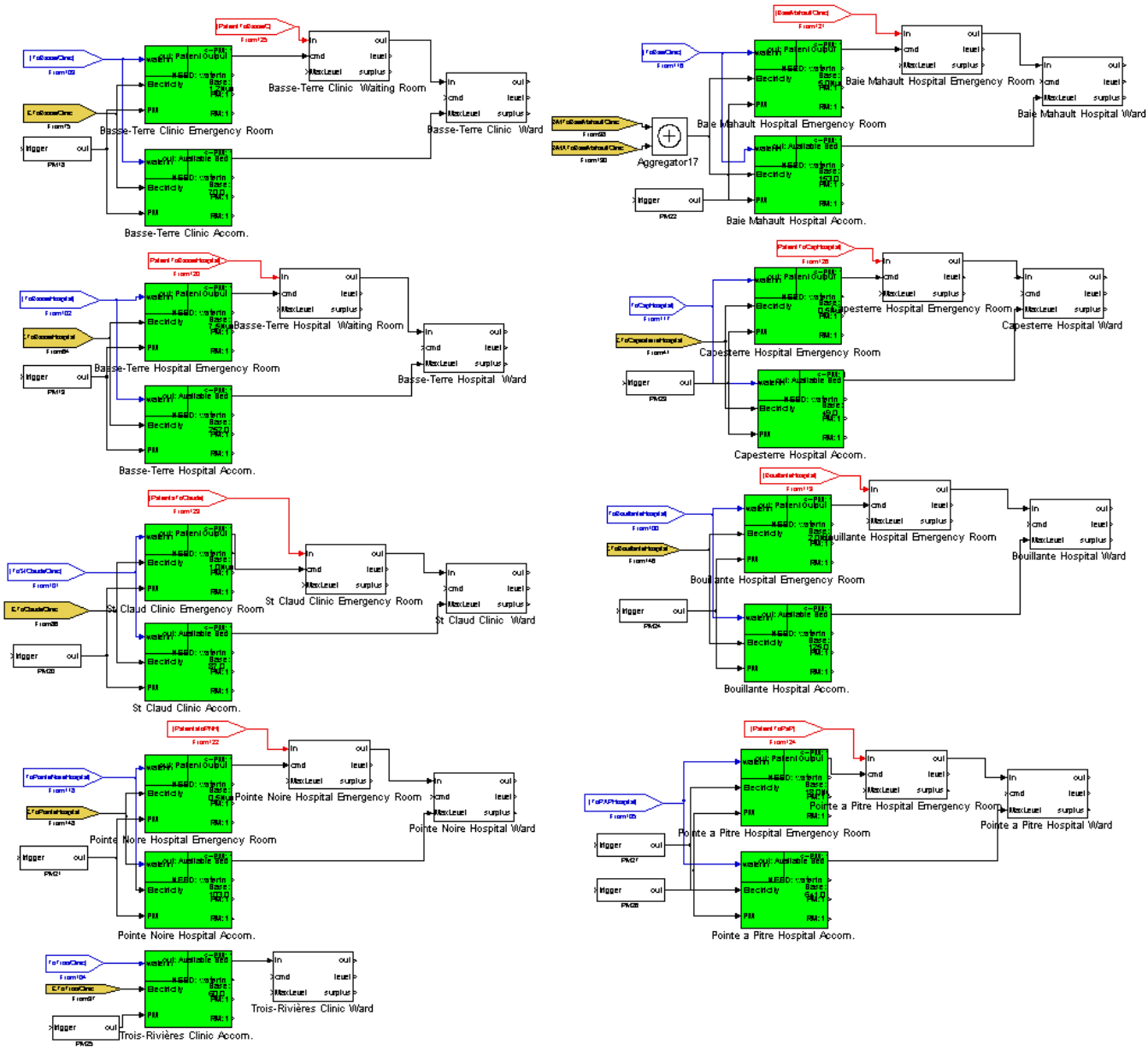

Figure 61. Complete Model of Hospital and Clinics in I2Sim

4.3.5 Ambulance Dispatch and Impact Area

Ambulances are dispatched from each hospital or clinic. A total of 50 ambulances are assumed to be present in Guadeloupe. The number of ambulances at each hospital is unknown. For the purpose of the study the 50 ambulances are distributed according to the treatment capacity of each hospital. Higher capacity hospitals are assigned more ambulances and vice versa. Table 15 shows the distribution of ambulances at each hospital.

Hospital	Number of Ambulances
Pointe-à-Pitre	23
Pointe-Noire	2
Bouillante	2
Baie-Mahault	7
Basse-Terre Clinic	2
St-Claude	2
Capesterre	2
Basse-Terre	10

Table 15. Ambulance Distribution between Hospitals and Clinics

Figure 62 explains the methodology in transporting survivors to different hospitals. Each hospital has an ambulance pool with the initial value of the number of ambulances at that particular hospital. The ambulances are injected into the transportation system and by updating the distributor value at each intersection the ambulances are sent to each impact area. Impact areas are represented by storage cells as well with the initial value being the number of seriously injured survivors. Ambulances reaching the impact area are delayed by 60 minute to accommodate for the delay in search and rescue as well as pick up time. This delay is slowly reduced because the search and rescue crew would continue to search for people as the ambulance come and go. Therefore, the time of delay should decrease, as there will be some people ready to be picked up once the ambulance returns. This delay is not totally negligible and will reach a minimum value of 27 minutes and stay constant for the rest of the simulation. The output of the delay channel is the signal to release survivors from the impact area. The ambulances carrying the patients enter the transportation system again and return to the hospitals. There are a total of 17 impact areas where survivors from each community are gathered in one place.

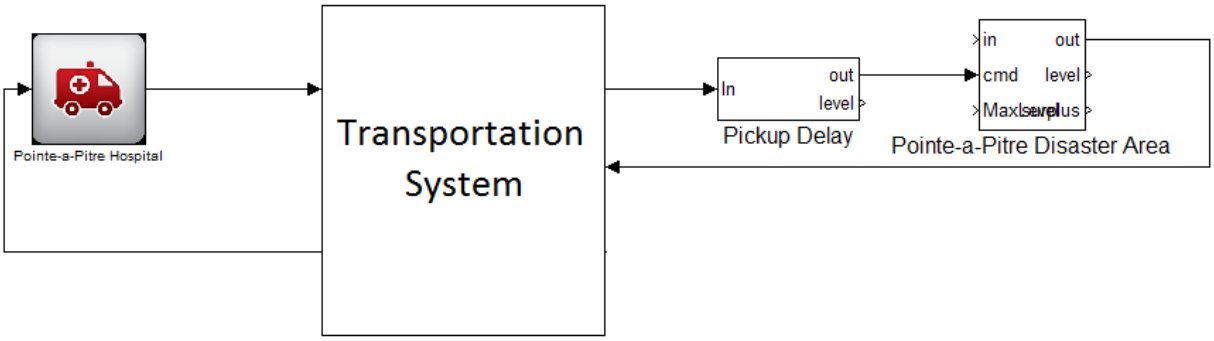

Figure 62. Ambulance Dispatch Concept Diagram

4.3.6 Residential Area

There are a total of 17 communities on the Island and each of them is modeled by a Production Cell. The HRT of a residential area is shown in table 16. The inputs for the HRTs are water and electricity representing the two basic needs of every household. Given these two inputs the output states how many people the residential area is able to accommodate. The output of the first Resource Mode is always the total population in that particular area. The goal is to maintain the Resource Mode of all residential area at one. This means there are enough water and electricity at each residential area for households to function properly. Figure 63 shows the residential area represented in I2Sim.

Accommodation	Water Input (Kl/h)	KW Input
16467	2717	1915
15101	2492	1436
14197	1863	958
10113	607	479
9870	467	412

Table 16. Human Readable Table of Lamentin's Residential Area

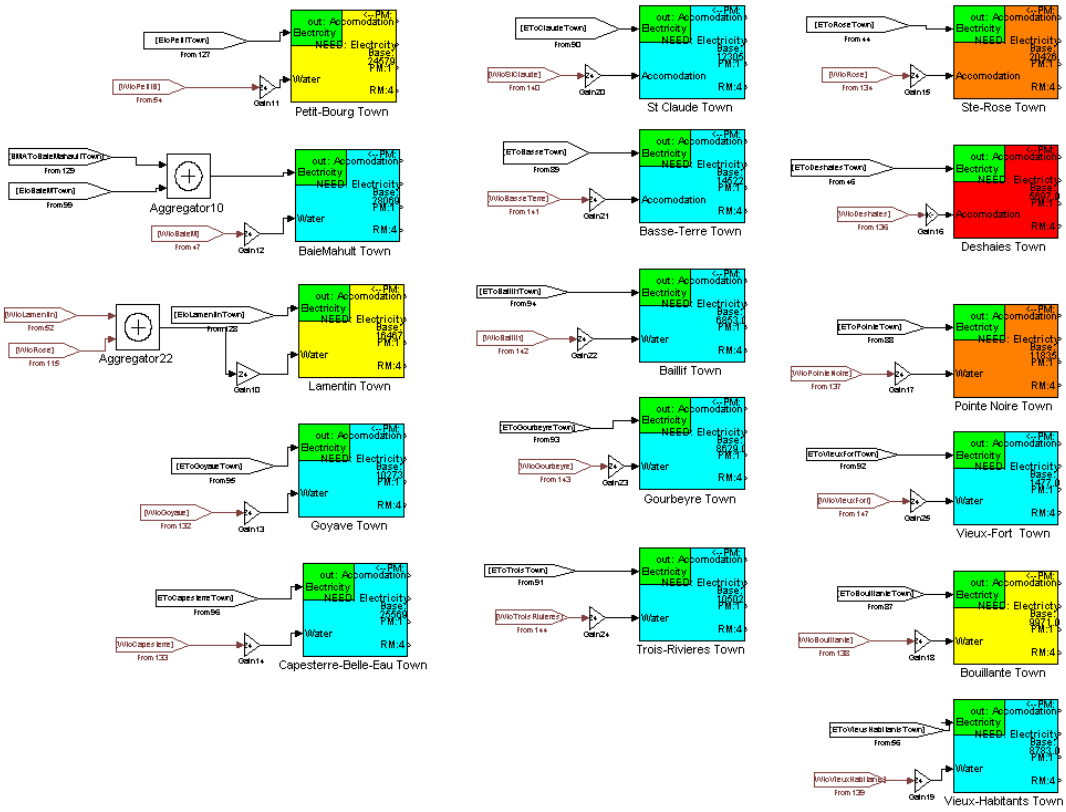

Figure 63. Complete Residential Area Model in I2Sim

4.4 Simulation and Results

Using the constructed model various simulations are conducted. Survivors will begin to gather at the designated evacuating area at t=0. Unlike the Japan model, the physical state of the impact area isn't the focus of the study. The focus is on the kind of damages the earthquake will cause to the Island by using the damage data simulated in section 4.2.

4.4.1 Scenario with No Damage and Simple Evacuation Policy

A simple simulation is performed first assuming there have been no damages to any critical infrastructures. This means all Production Cells are set to Physical Mode 1 as well as all Channel Cells. All resources are abundant and, therefore, all Production Cells are operating at Resource Mode 1. Electricity and water are distributed to each infrastructure to satisfy the demands. The complete distribution ratio for this scenario can be found in Appendix B. This situation gives us an overview of how efficient the systems are for emergency response for best case scenario.

There are three main points of observation in the system. These are: seriously injured people transported out of the impact areas, patients discharged from the emergency rooms, and the states of the residential areas. The initial policy requires each hospital to only send ambulances to nearby areas.

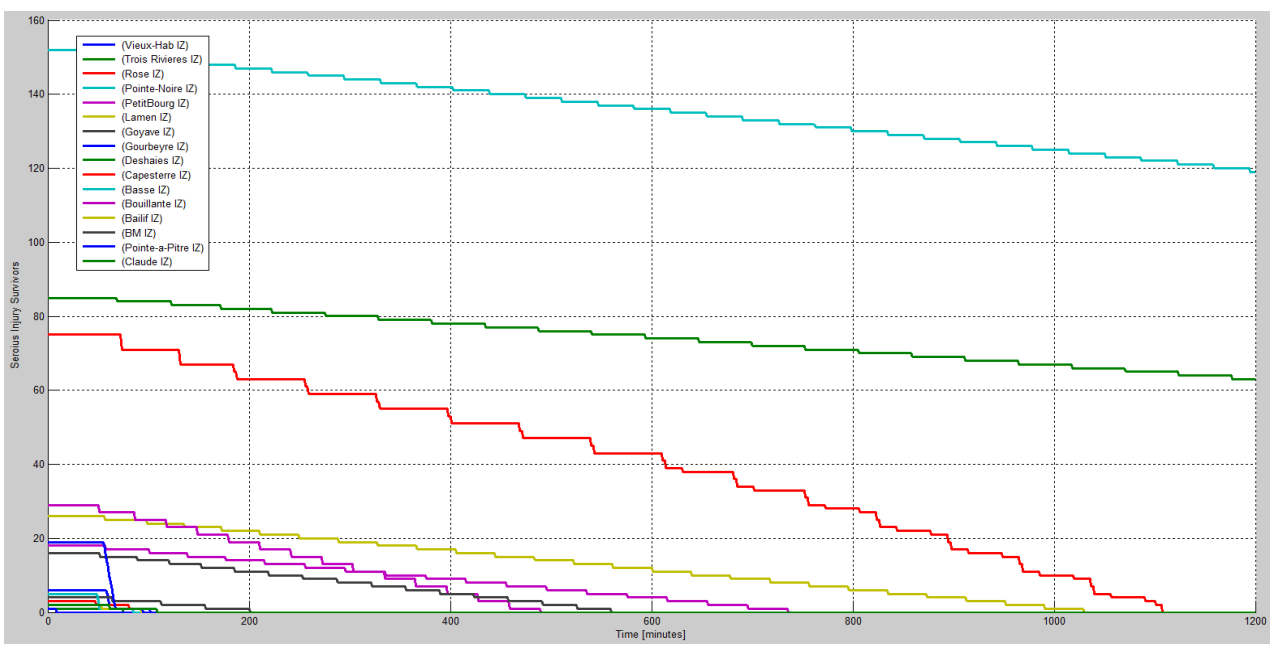

Figure 64. Survivor Evacuation Plot for Basic Scenario 1 Simulation

Figure 64 shows the plot of survivors evacuating the impact areas. As expected, the policy produces very fast evacuation in some areas while very slow in others. Noticeably, the town of Pointe-Noire (Blue) and Deshaies (Green) as well as Ste-Rose (Red) were evacuated extremely slowly. This is due to having small capacity hospitals in areas with high number of seriously injured survivors. A different policy needs to be implemented.

4.4.2Scenario with No Damage and Modified Evacuation Policy

From the above section it is realized that coordination between the different hospitals is a very important factor in disaster response policy. A more realistic approach would be for each hospital and clinic to evacuate the seriously injured survivors in their own areas first and then send help to other areas. In order to implement the proposed policy a couple of elements need to be added to the model.

The first modification to the model is for the ambulance dispatch to be aware of whether all the survivors have been rescued. Figure 65 shows the necessary components needed to add this function. As ambulances return to the hospitals they will attend to their initially assigned impact areas until the number of survivors reaches zero. Then the ambulance will be reassigned to another impact area. This is achieved using a switch and Distributor block.

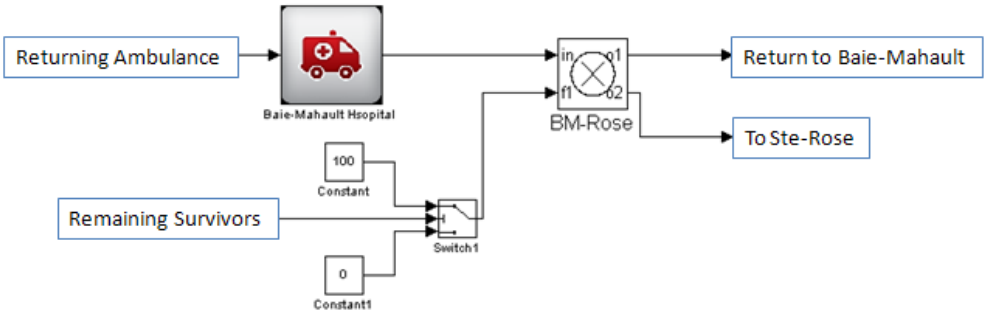

Figure 65. Components for Dynamic Ambulance Distribution

Another necessary change is in the impact area. Referring back to figure 62, we can see that the impact area is represented by a Storage block and the release of the survivors is controlled by the in-coming ambulances. A problem arises when ambulances from more than one hospital arrive at the same impact area. While survivors are released to the output of the Storage Cells, there is no way of distinguishing which hospital the ambulances came from at any particular instance. The mechanism shown in figure 66 aims to solve this problem. The figure shows ambulances from four different hospitals evacuating one impact area. In order to distinguish how many ambulances are sent from each hospital we need to calculate the percentage of ambulances at any given time that belong to each hospital. This is achieved by dividing the number of ambulances over the sum of all the ambulances from the four hospitals. The resulting percentage controls the ratio for a Distributor at the output. A switch is needed to prevent a singularity if there happens to be no ambulance entering the impact area at a given moment.

With the above changes implemented the model is ready to simulate the proposed policy change.

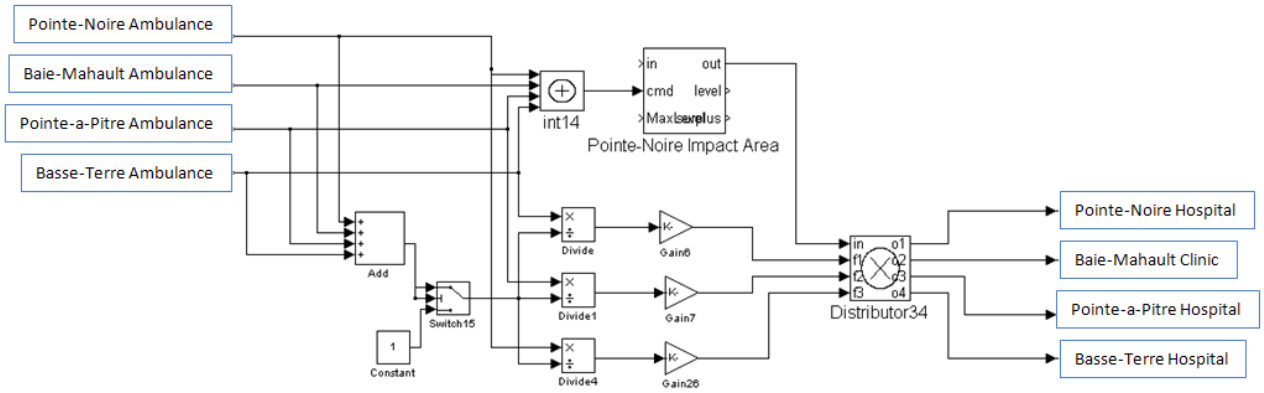

Figure 66. Mechanism Separating Ambulance Exiting the Impact Area

4.4.3 Survivors Leaving the Impact Area with the Modified Evacuation Policy

Figure 67 shows the map of the Island with the locations of the hospitals and the evacuation areas for each town. First the slow evacuation at Ste-Rose is investigated. The clinic in Baie-Mahault is responsible evacuating areas including of Baie-Mahault, Lamentin, Petit-Bourg and Ste-Rose. Since there are only five ambulances at the Baie-Mahault Clinic, even with the proposed policy it will still take a significant amount of time to evacuate all the survivors, especially at the town of Ste-Rose.

Pointe-à-Pitre Hospital is the biggest hospital on the entire Island. With only 19 survivors to evacuate, the ambulances at the hospital quickly become available. The light blue plot in figure 68 is the result of having ambulances from Pointe-à-Pitre Hospital sent to Ste-Rose, since it is a more populated impact area than the Baie-Mahault Clinic is responsible for. Comparing the results in figure 64, we can see that the evacuation time of Ste-Rose decreased from 1100 minutes a little more than 500 minutes.

Also shown in figure 68, there are the other impact areas that Baie-Mahault Clinic is sending ambulances to and they are all evacuated in a timely manner. It can also be seen that the impact area of Pointe-à-Pitre is evacuated very quickly compared to the others since the ambulances are sent to their own areas first. To improve on this discrepancy and, therefore, on the overall performance of this area, a better method is for both hospitals to coordinate at the beginning of the disaster and pool together all of their ambulance and distribute them accordingly to the amount of survivors at each area. Even though this can slow down the evacuation process at Pointe-à-Pitre it could increase the overall speed across the six different areas. Figure 69 shows the result from this adjustment. In this simulation, the Baie-Mahault

hospital is assigned to Lamentin and Petit-Bourg while the Pointe-a-Pitre Hospital will send ambulances to Pointe-a-Pitre, Baie-Mahault and Ste-Rose. As expected, the impact area of Pointe-a-Pitre is evacuated slower than before, but the overall evacuation time of all other impact areas improves, as all but one impact area are cleared by 350 minutes. Ste-Rose, which is the highest populated area, is also improved compared to the previous result.

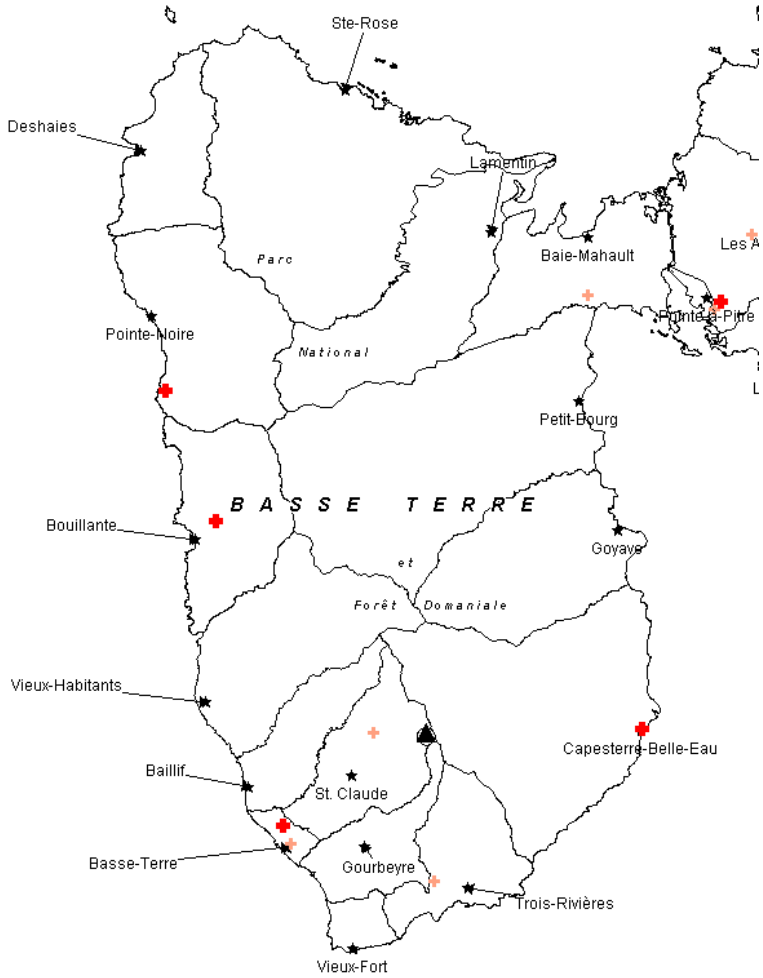

Figure 67. Map of Guadeloupe Island Showing Hospital and Disaster Area

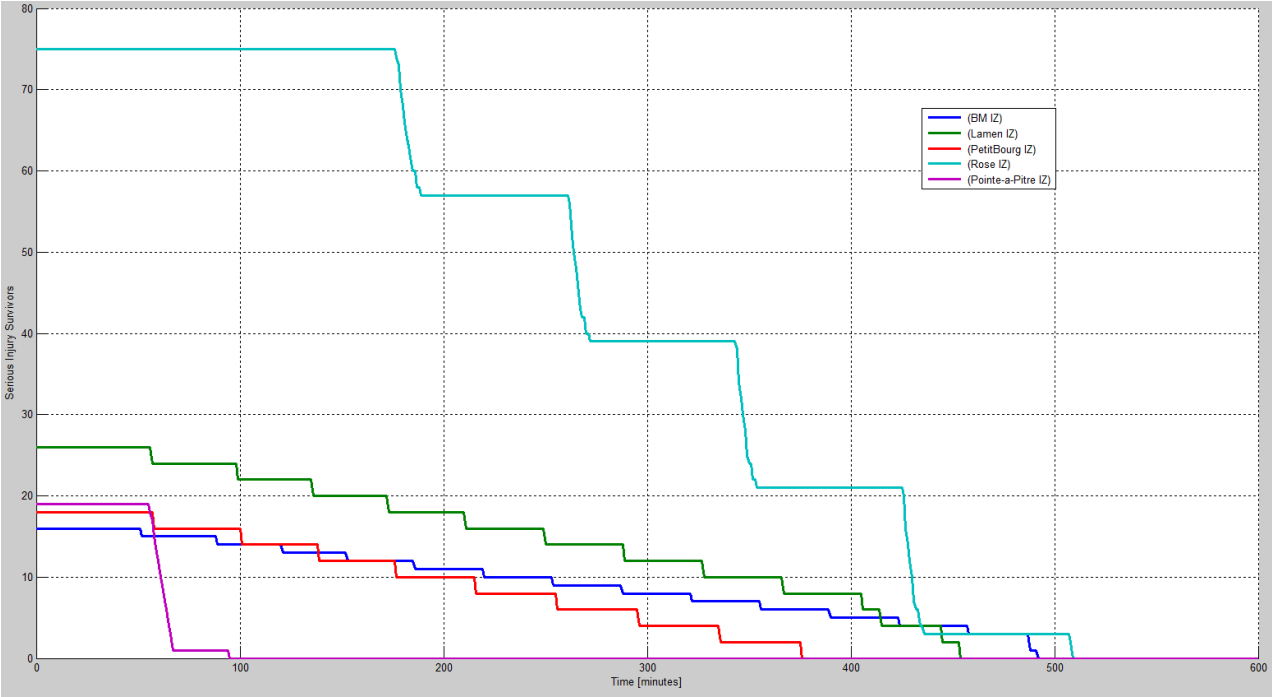

Figure 68. Simulation Results of Impact Area for Baie-Mahault Clinic and Pointe-à-Pitre Hospital

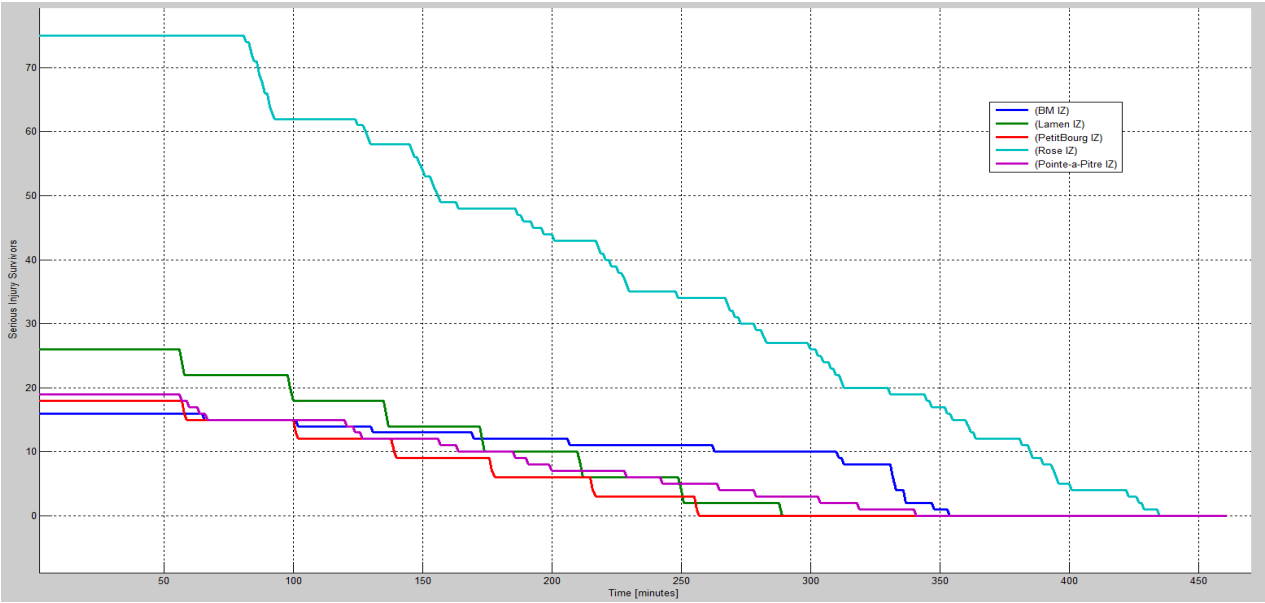

Figure 69. Distributed Ambulance Method Simulation Results of Impact Area for Baie-Mahault Clinic and Pointe-à-Pitre Hospital

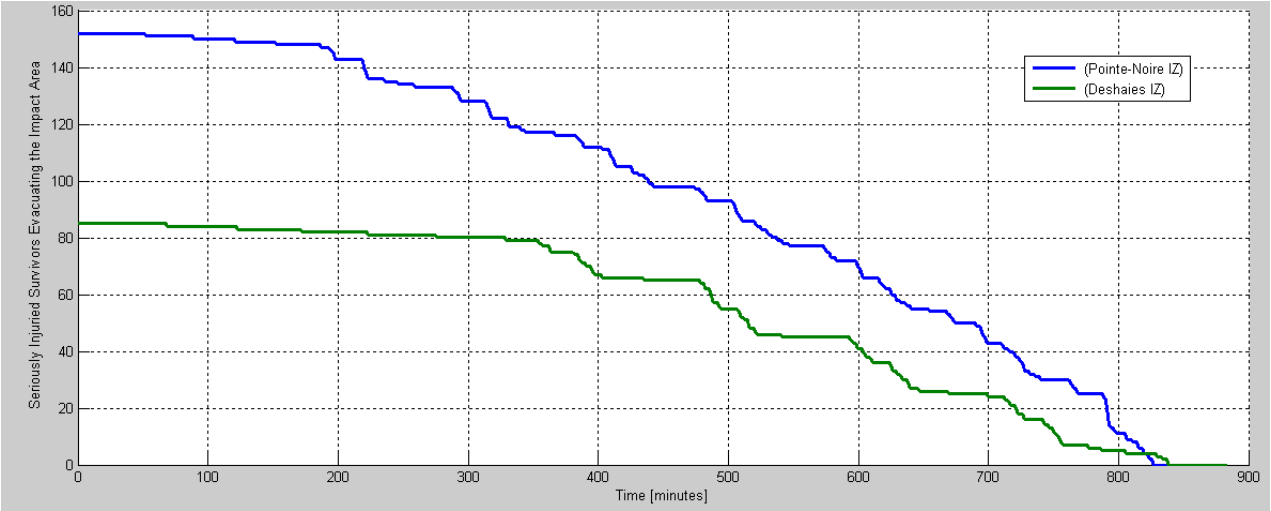

Figure 70. Modified Evacuation Policy Results of Impact Area for Pointe-Noire and Deshaies

The other two troubled areas from the initial simulation are Pointe-Noire and Deshaies. By referring back to the map in figure 67, we can see that the hospitals that are close to these two impact areas are Pointe-Noire Hospital, Bouillante Hospital, Basse-Terre Hospital and Basse-Terre Clinic. Since these two areas combined account for the largest amount of seriously injured survivors, help should be given to them whenever possible and no ambulance should be left idling. Pointe-à-Pitre Hospital also joins the effort in evacuating these two areas even if it has to travel much longer distances compared to the other hospitals. The large number of ambulances and high treatment capacity of Pointe-à-Pitre Hospital should make a significant difference in the evacuation process. The results of this implementation are show in figure 70. Both areas are evacuated in 830 minutes, which is a huge improvement compared to figure 64.

4.4.4 Discharged Patients at the Hospitals for the Modified Evacuation Policy

The evacuated survivors from the impact areas are sent to the different hospitals. The speed at which patients are treated depends on the capacities of the hospitals. In figure 71, the number of patients discharged from the emergency rooms is plotted. Pointe-Noire and Basse-Terre Hospital process the most patients since they have the highest capacities. They also have the most contribution in helping other impact areas. The plot also shows that no hospitals are left idling which means all hospital are processing patients throughout the duration of the simulation.

Another important factor is to make sure each hospital and clinic has enough beds to accommodate the patients coming out of the emergency room. Since the assumption of no damages is made for this simulation all hospitals are able to accommodate their patients.

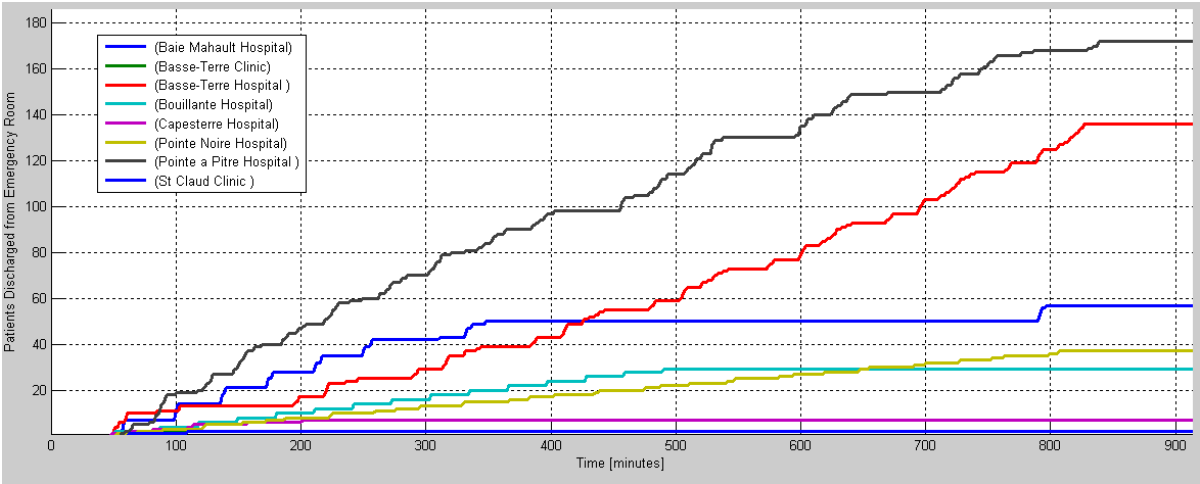

Figure 71. Number of Patient Leaving the Emergency Room

4.4.5 Survivors Leaving the Impact Areas for the Damage Scenario

After establishing an efficient response policy in the last section, a second scenario is simulated considering damages to the different systems in the model. Similarly to the case with no damages, we can separate the problem into two parts and improve the efficiency of both the evacuation speed and the treatment speed, one at a time. Figure 72 shows the plots of survivors leaving the impact areas. It is evident that the speed of evacuation has slowed down due to damages and congestions to the roads. The main concerns are once again the evacuation speeds of the three major impact areas. In order to improve the speed we need to investigate the location of congestions and find alternative routes when possible. The delay of each road segment can be calculated in the external file generate for the road segments. The goal is to attempt, as much as possible, to find detours around congestion points while staying on the route chosen initially. Investigation reveals several congested spots but there are very few areas where detours are possible because of the simple nature of the road network. Figure 73 shows the results of the evacuation process after the routes have been modified.

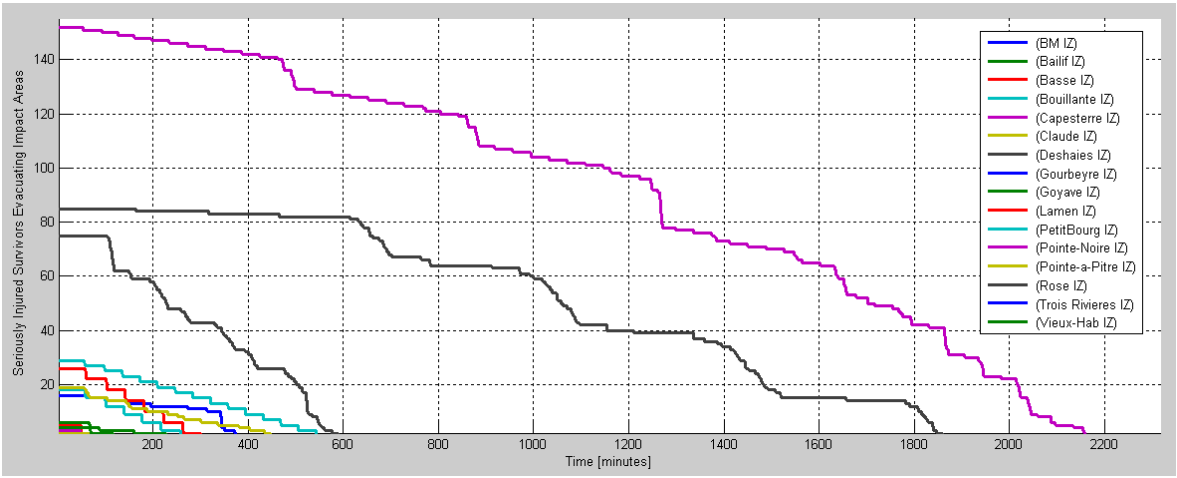

Figure 72.Seriously Injured Survivors Leaving Impact Areas for Damage Scenario Simulation

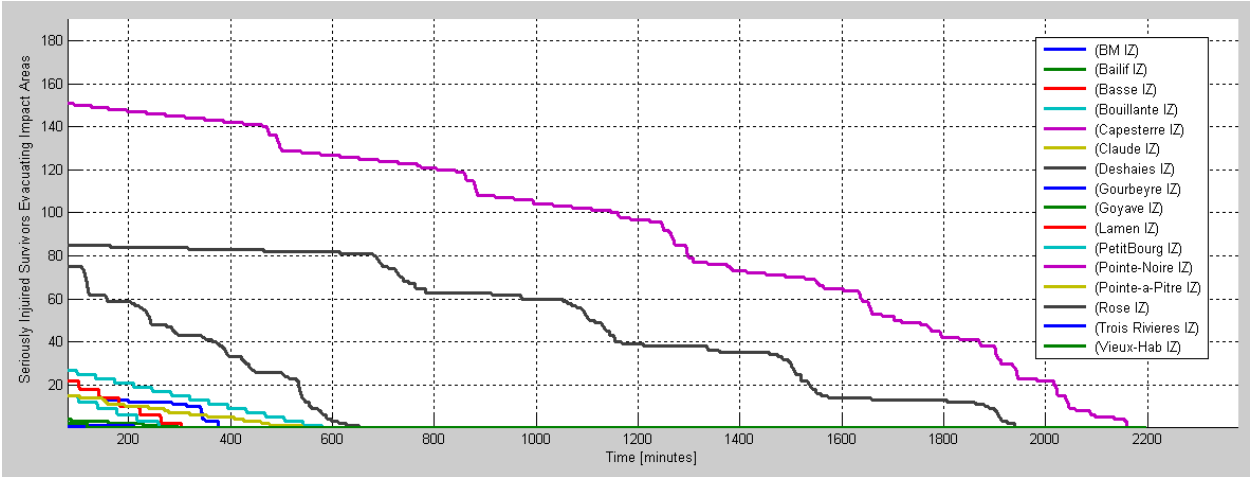

Figure 73.Seriously Injured Survivors Leaving Impact Areas for Modified Route

The results do not yield significant changes. In fact the evacuation speed for the top 3 impact areas has decreased. This is because even though the routes are changed to alternative roads with less damage, the increase in travel distances cancels the effect of the increase in speed.

Another approach is to choose a completely different route to evacuate Pointe-Noire and Deshaies. Given the layout of the road network, only one other possibility could yield better results and it is shown on the map in figure 74. The right of the figure shows the original route chosen for the simulation. The left of the figure shows the new route proposed. But as discussed in section 4.2.2 the landslide will cause the road to be closed for the duration of the simulation. This leaves the initial route as the desired choice.

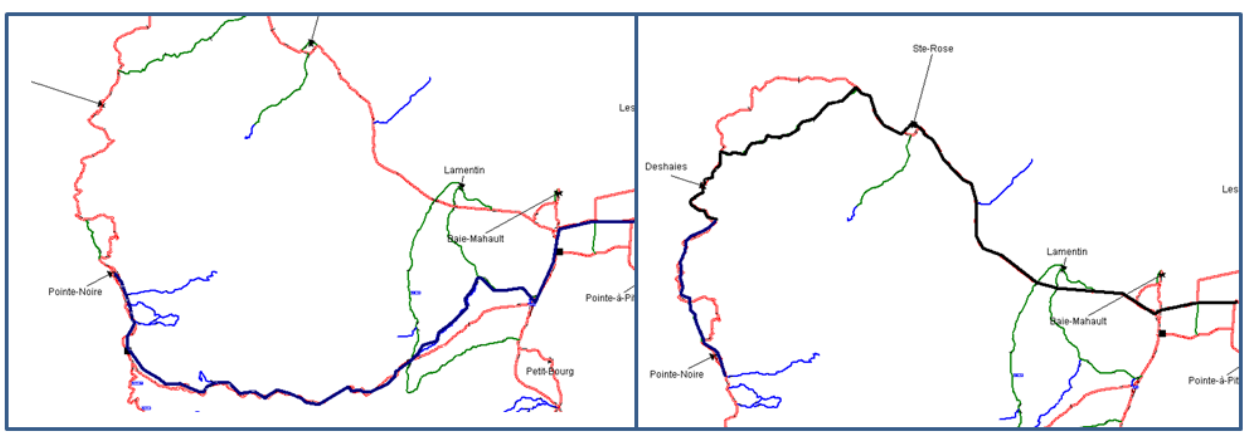

Figure 74. Different Routes Taken to Reach Pointe-Noire Impact Area

4.4.6 Patients Discharged at Hospitals for Damage Scenario

Discharge speed certainly slows down because of the increased in evacuation rate but the damages to infrastructures should also have an effect. Figure 76 displays the I2Sim environment during the simulation. The I2Sim interface shows the infrastructures that are affected by the earthquake by displaying the color of the Physical Mode and the Resource Mode. Most of the substations and power plants do not sustain damage except for substation of Ste-Rose and Bouillante, since they are closer to the location of the earthquake. Around half of the water stations sustain physical damage and are operating at lower capacity. Combined with the reduced input of electricity, only two of the water stations are operating at full capacity. The reduced outputs at the substations and water stations cause half of the emergency rooms to lower their productivity as well as reducing the number of hospital beds available. Most of the residential areas also lack resources to accommodate their residents.

Figure 75 shows the process of discharging patients at the hospitals if the policy for resource allocation does not change from the previous scenario. Since the Pointe-à-Pitre Hospital contributes the most in the evacuation process, it discharges the most patients. All the major hospitals have been reassigned to help different areas during the evacuation process and this can be seen by the continuous increase in the amount of patients discharged at those hospitals. Hospital and clinics that have limited treatment capacities and are far away from major impact areas did not participate in the treatments of patients from those areas. Instead the ambulance from these hospitals and clinics are simply sent to other bigger hospitals to increase the number of ambulances there. Since those hospitals are closer and have higher capacities, this proves to be a more efficient policy. The next step is to validate if having different electrical and water distribution ratios would improve the performance of the hospitals and the residential areas.

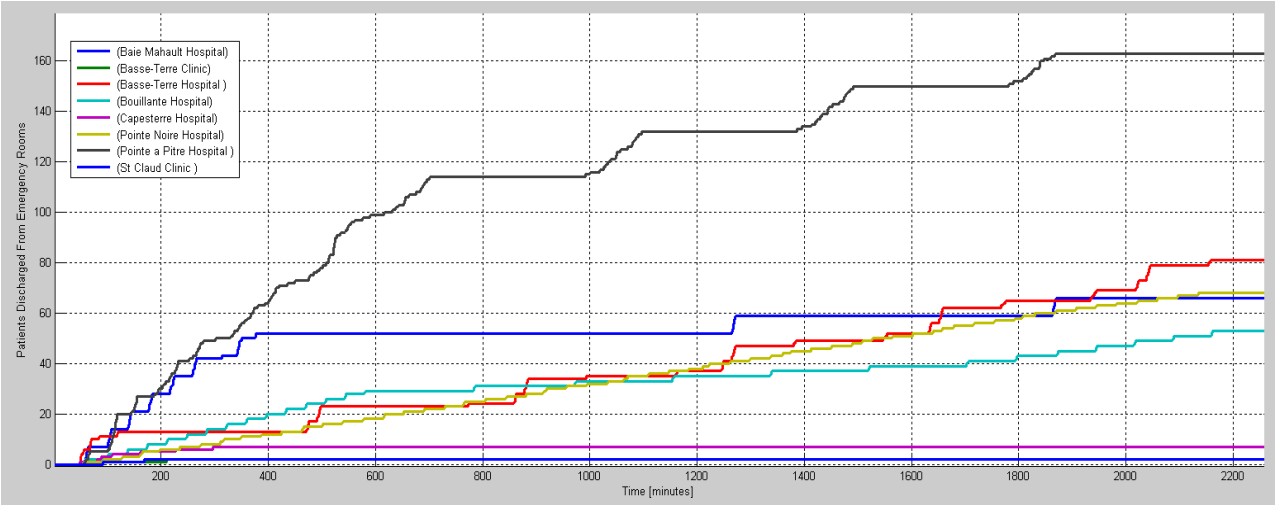

Figure 75.Discharged Patients from the Emergency Rooms

4.4.7 Modified Power Distribution Ratios for the Damage Scenario

While physical damages cannot be restored during the duration of the simulation, allocation of resources is essential to efficiently utilize the available resources. The I2Sim Production Cell is not only able to display the states of the infrastructures it can also show the resource that is lacking. Having this information is critical in improving resources allocation.

The only damage to the electrical system occurs at the Ste-Rose and Bouillante substations. Since Ste-Rose substation satisfies its load by receiving power from neighboring substations, more power needs to be transmitted because Ste-Rose is operating at lower capacity and efficiency. The Bouillante Substation operates in a similar fashion despite of having a geothermal plant nearby as shown in figure 45. In reality the plant has not been active for the past year and Bouillante Substation has been receiving power from power stations in Baie-Mahault. With this information in hand the new electrical distribution ratio is compiled while keeping in mind that damaged water stations and hospitals would require less electricity.

4.4.8 Modified Water Distribution Ratio for the Damage Scenario

Given limited capacity of a number of the water stations caused by damages, the goal is to allocated resources to first ensure productivity of the hospital's emergency rooms. The rest of the hospital is not as high priority as long as enough beds are available to accommodate the discharged patients from the emergency units. The needs of the residential areas cannot be ignored either. Therefore the policy is to maximize treatment capacities of hospitals while accommodating at least 50% of the residents until all patients are treated. The new electrical and water distribution ratios can be found in Appendix C.

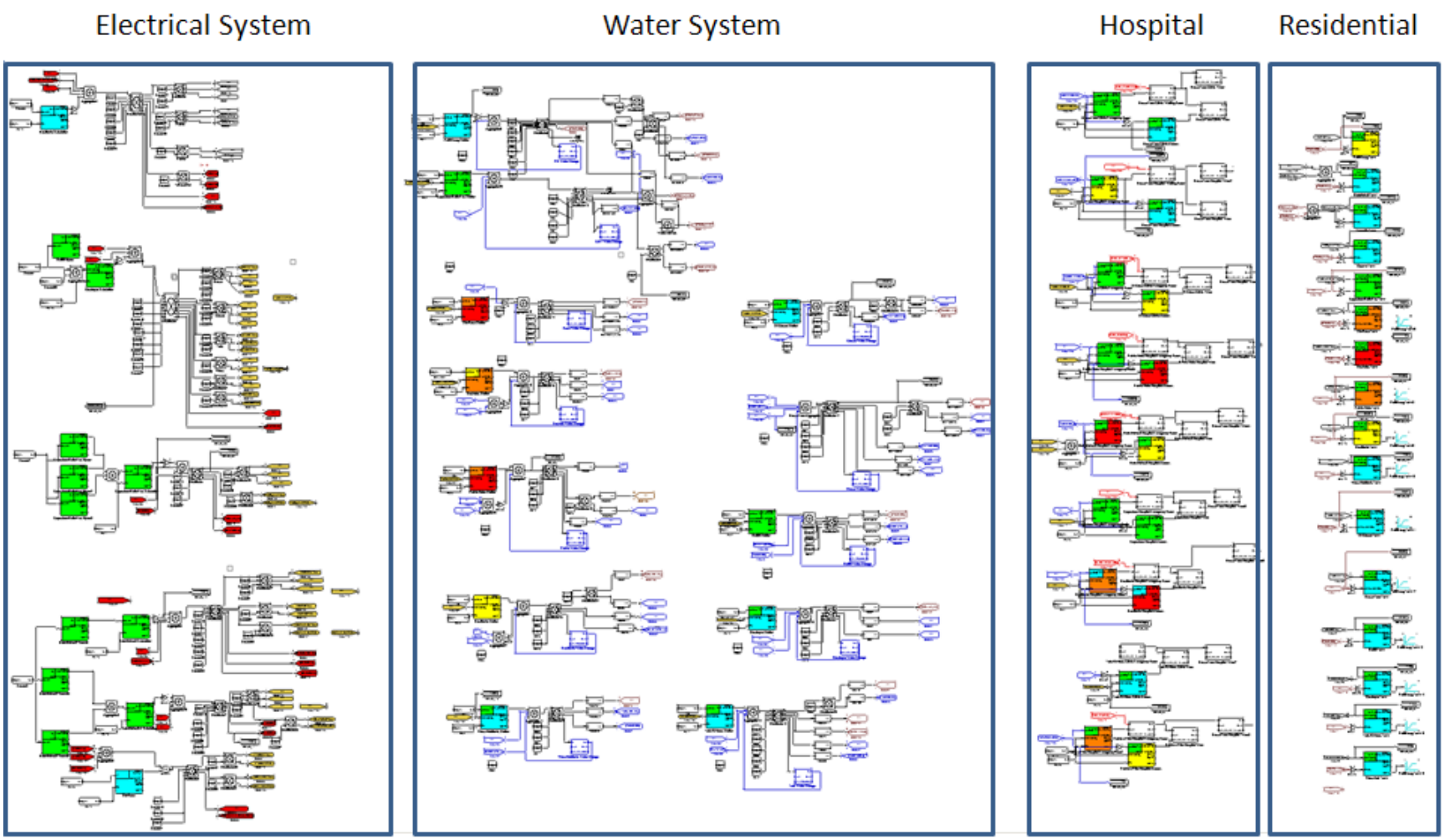

Figure 76.Snapshot of Simulation for Damage Scenario in I2Sim Environment

4.4.9Simulation Results for the Modified Distribution Ratio

Following the above methods, the simulation is conducted once again. Figure 77 shows the I2Sim environment snap shot. Improvements can be seen by the colors of the Production Cells when compared to figure 76. All the water stations and substations are given sufficient resources to function at their respective capacities. The damages to water stations and water pipes have proven to have an effect on the hospitals, as there is not enough water to be sent to the hospitals in Bouillante, Baie-Mahault and Pointe-à-Pitre. As a result, these hospitals operate at lower capacities. A similar situation arises for the residential areas. While some areas are able to supply the full population, others can only satisfy a fraction of the people living there. This is due to the combination of damages to both the water stations and the water pipes. Table 17 summarizes the percentage of residents accommodated by each town.

Another point of comparison is at the hospital. Figure 79 shows the patients discharged for the modified distribution ratio simulation. It is important to note that there are virtually no differences when compared to figure 75. This is due to the extensive delay that results from the damages to the transportation system. Since survivors are arriving at the hospital at a slower rate the full capacity of the hospitals are not utilized to realize their benefits.

Town	% of People Accommodated
Pointe-Noire	27%
Bouillante	56%
Deshaies	51%
Baie-Mahault	94%
Ste-Rose	48%
Le Lamentin	100%
Goyave	86%
Basse-Terre	100%
St-Claude	100%
Gourbeyre	100%
Vieux-Fort	100%
Trois-Rivières	100%
Capesterre-Belle-Eau	100%
Baillif	100%
Petit-Bourg	74%
Vieux-Habitants	100%

Table 17 Percentage of Population Accommodated for Each Town

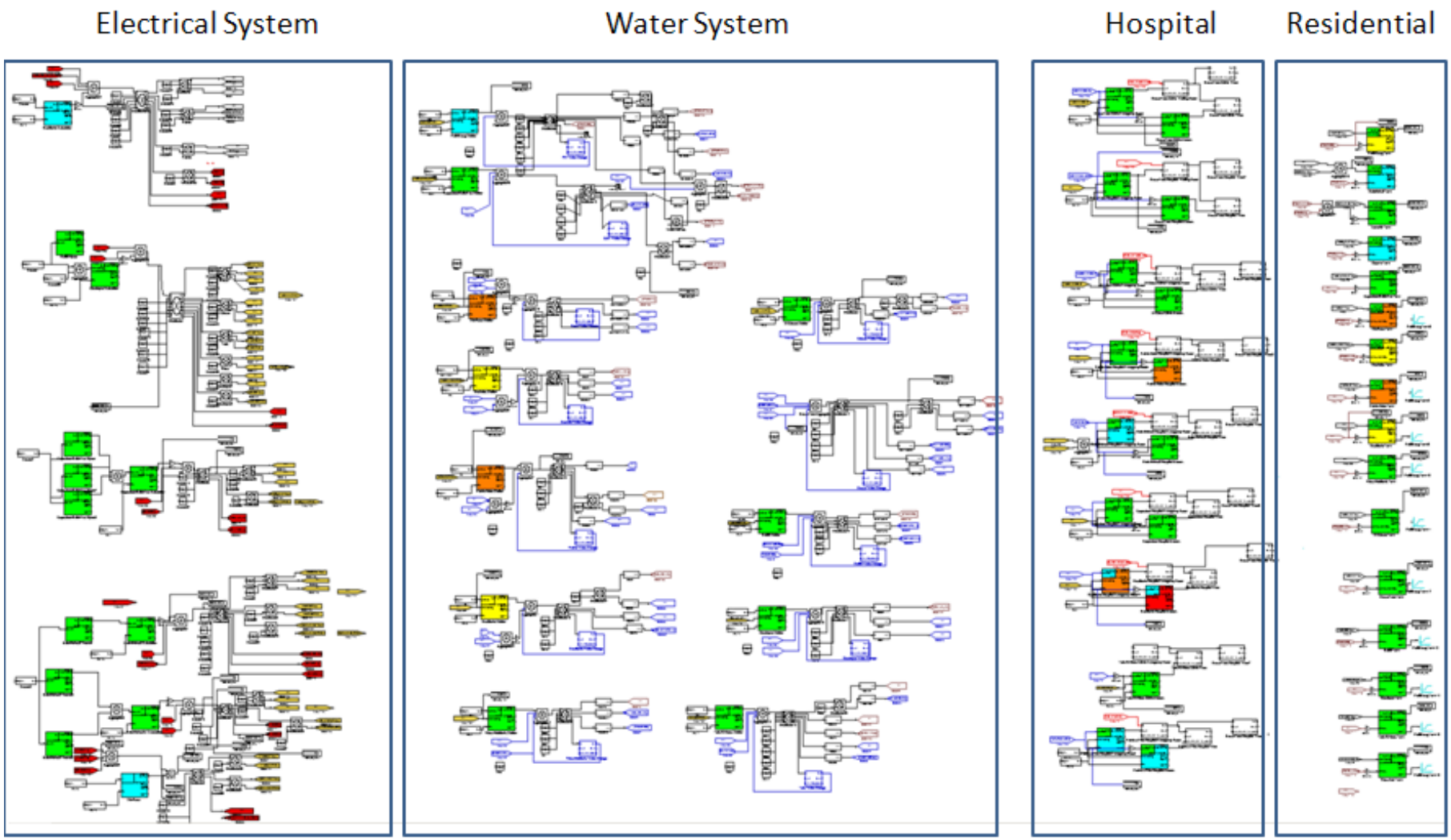

Figure 77.Snapshot of Simulation for Modified Distribution Ratio in I2Sim Environment

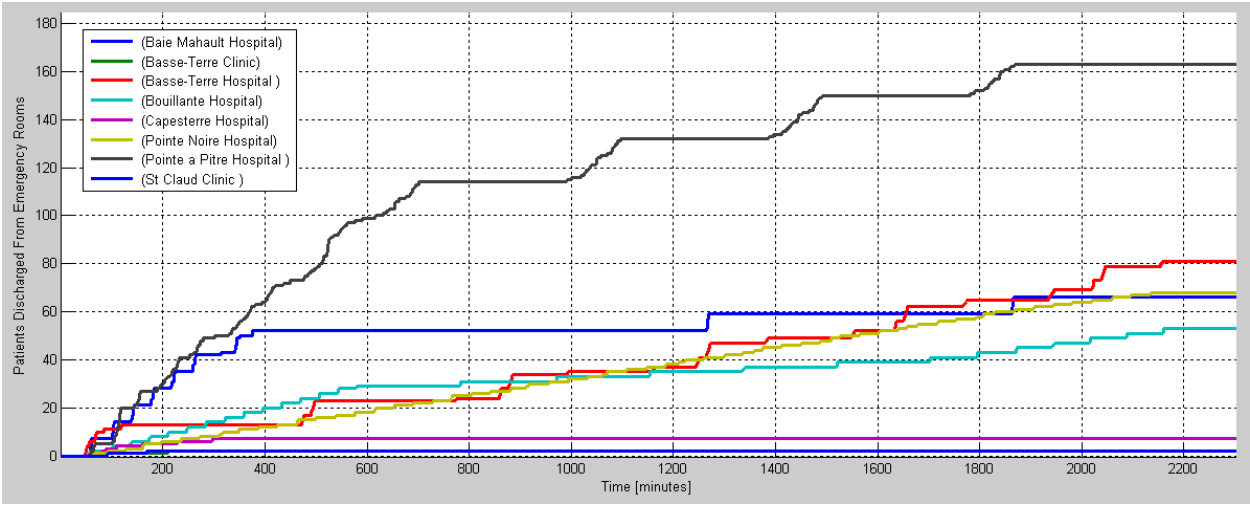

Figure 78. Discharged Patients from Emergency Rooms for Modified Distribution Ratio

4.5 Simulation Conclusion

By examining all the simulation results obtained in section 4 several conclusions can be made for the particular earthquake scenario simulated. The transportation system in Guadeloupe has proven to be a major weak point during disasters response. The only route connecting the east side and the west side of the Island is vulnerable to landslides. The simulations prove that, combined with the increased level of congestion, the evacuation speed decreases dramatically with virtually no remedy available.

The Island's electrical system is well constructed for meeting the demands even when some substations are damaged. The power productions at the two plants in Baie-Mahault are large enough to supply the entire island on their own. Even though from a resources point of view the electrical system provides more than enough power, problems arise when one or more transmission lines are damaged. Also there are only five substations supplying the entire Island, which means each substation is responsible for distributing power to a large area. If a substation is totally damaged then the area it supplies will be out of power assuming no back up components are available.

The water system showed vulnerability as damages to pipes and stations caused shortage of supplies to different loads especially the residential areas. Theoretically, the water system should be very resilient since there is a water station for each town and most of the stations produce water. The reason the system could not meet the demand was because the total production of water barely meets the demand during normal operations. Therefore it is very hard for the system to supply sufficient water under a damaged state.

There are many small hospitals around the island and larger hospitals are not too far away to respond to emergencies. But in the end the main concern is the transportation system that hinders the speed of patients getting to the hospitals, which in turn can mean increased loss of human lives.

5 Conclusion

5.1 Contribution

This thesis presented the contribution to the DR-NEP and the MATRIX project by conducting disaster response studies using the I2Sim interdependencies simulator on two test cases: Sendai, Japan, and the Guadeloupe Island, in the French West Indies. After the Sendai study case was finished it was apparent that several additions to the toolbox were needed. The main modification to the toolbox was developing an enhanced Human Readable Table for the Channel Cell, for both loss and delay factors. Several other minor modifications were implemented to increase robustness of other components.

The improved I2Sim toolbox allowed for more sophisticated modeling of the Guadeloupe Island. First a disaster scenario was simulated using several methodologies to present a realistic earthquake and landslide scenario. The results were translated into data for the I2Sim model. At the same time information gathering was also important in order to accurately populate the cells and channels in the model. After conducting the simulation the system's strength and weakness were revealed. Some systems were very resilient while others were vulnerable during disaster situations. In the end the results contributed to other parts of the MATRIX project and can be used as consideration for future changes to improve on the existing systems.

5.2 Future Work

The research work also brings forth several areas of continuation work. The performance speed of the model is very poor as the average simulation time reaches around 50 minutes. This is mainly due to the large scale of the model particularly for the transportation system. A more sophisticated traffic model can be developed, since the transportation system is essential to all disaster response modeling. Also, other disaster scenarios can be simulated to implement different levels of damages to different areas of the system. Lastly, an optimization tool can be implemented in order to arrive at the optimal distribution ratios since in this work most of the decision making has been done by hand.

Bibliography

[1] Haddow, George D.; Jane A Bullock (2003). Introduction to emergency management. Amsterdam: Butterworth-Heinemann. ISBN 0-7506-7689-2.

[2] César López, "Multi-energy Systems Simulator for Hourly Management and Optimization of GHG Emissions and Fuel Costs," UBC, MASC Thesis 2011.

[3] Zschau, J. (2010). MATRIX - New Multi-Hazard and Multi-Risk Assessment Methods for Europe. SEVENTH FRAMEWORK PROGRAMME.

[4] HyunJung Lee, "Infrastructure Interdependencies Simulation (I2Sim) System Model and Toolbox," UBC, Master Thesis, 2007.

[5] Lu Liu, "Prototyping and Cells Modeling of the Infrastructure Interdependencies," UBC, MASC Thesis 2007.

[6] 2011 Tōhoku earthquake and tsunami. (2012, October 03). Retrieved October 05, 2012,from Wikipedia: http://en.wikipedia.org/wiki/2011_T%C5%8Dhoku_earthquake_and_tsunami

[7] Tiange Wang, "A Web Service Based Disaster Response Interface for The DRNEP Platform," UBC, MASC Thesis 2012.

[8] Hugón Juárez, (2011, December, 19). "I2SIM CONEPT MODEL," Retrieved October 05, Power Point Presentation

[9] (2012, November, 26)."Guadeloupe – Disaster Statistics," [Online]. Available: www.preventionweb.net/english/counties/statistics/?cid=217

[10] Bertil D., (2009.)"Scénarios Départementaux de Risque Sismique en Guadeloupe," Report BRGM/RP-57488-FR, 88p. (in French)

[11] Youngs R.R., ChiouS. J., Silva W.J., Humphrey J.R. , (1997). "Strong ground motion attenuation relationships for subduction zone earthquakes," Seismological Research Letters, 68(1) p. 58–73.

[12] Wald D.J., Quitoriano V., Heaton T.H., Kanamori H., Scrivner C.W. and Worden C.B., 1999.TriNet "Shake Maps": Rapid generation of instrumental ground motion and intensity maps for earthquakes in Southern California, Earthquake Spectra, 15 p. 537-555.

[13] Atkinson G.M., Sonely E., 2000, Empirical relationships between modified Mercali intensity and response spectra, *Bulletin of the seismological Society of America*, 90(2), p. 537-544.

[14] Yun Zhou, "Geotechnical Engineering: Slope Stability," *CED Engineering*, vol. 1, pp. 6-32, December 2006.

[15] Duncan J.M., Wright S.G. 2005. Soil strength and slope stability.John Wiley & Sons, Inc.

[16] Sedan, O. (2011). Logiciel ALICE version 7 – Guide Utilisateur. BRGM report.RP-60004-FR. 31p. (In French)

[17] Pierre Mouroux and Benoit Le Brun, "Presentation of RISK-UE Project," Bull Earthquake Eng, vol. 4, pp. 323-339, September 2006.

[18] Christophe Bonnel, "Impact des chutes de cendres sur le réseau d'adduction d'eau potable de Guadeloupe," Institue of Earth Physics of Paris, Paris, 2011.

[19] Sedan O., Terrier M., Negulescu C., Winter T., Roullé A., Douglas J., Rohmer., Bès-de-Berc S., De Martin F., Arnal C., Dewez T., Fontaine M., 2008 - Scénario départemental de risque sismi-que- Méthodologie et processus de réalisation. Report BRGM/RP-55415-FR, 459p (in French)

[20] Bertil D., Roussillon P., Bes de Berc, S., 2006, Etude Préliminaire à la mise en place des scénarios départementaux de Risques Sismique en Guadeloupe, Report BRGM RP 55187-FR, 79p. (in French)

[21] SAFELAND, 2011. Deliverable 2.1, General Methodology for systemic vulnerability assessment, Report FP7-Safeland project, 219p

[22] PRERURE, 2006, Plan énergétique regional pluriannuel de prospection et d'exploitation des energies renouvelabes et d'utilisation rationnelle de l'énergie de la Guadeloupe à l'horizon 2020.Report, http://www.guadeloupe-energie.gp/wp-content/uploads/RapportFinal_Prerure.pdf . (in French)

[23] Dr. Jan de Boer, *ORDER IN CHAOS Modelling Medical Disaster Management*. Amsterdam, The Netherlands: Free Univeristy Hospital, 1999.

[24] Fontaine M., Sedan O., Stieltjes L., 2007, Caractérisation des enjeux aux Antilles, Report BRGM/RP-55530-FR, 87 p.(in French)

[25] Milutinovic Z., Trendafiloski G., 2003. WP4: Vulnerability of current buildings, Report RISK-UE project.

Appendices

Appendix A: Human Readable Tables and Other Gathered Information

Bouillante Substation	
MW Output	MW Input
15000	15000
11250	11250
7500	7500
3750	3750
0	0

Gourbeyre Substation	
MW Output	MW Input
0.4	0.4
0.3	0.3
0.2	0.2
0.1	0.1
0	0

Capesterre Substation	
MW Output	MW Input
10.3	10.3
7.725	7.725
5.15	5.15
2.575	2.575
0	0

Baie-Mahualt Substation	
MW Output	MW Input
16.7	16.7
12.525	12.525
8.35	8.35
4.175	4.175
0	0

Ste-Rose Substation	
MW Output	MW Input
1	1
0.75	0.75
0.5	0.5
0.25	0.25
0	0

Deshaies Water Station	
Water Output (kL/hour)	Electrical Input(kW)
56.0	1.0
33.6	0.6
28.0	0.5
11.2	0.2
0.0	0.0

Pointe-Noire Water Station	
Water Output (kL/hour)	Electrical Input(kW)
80.9	1.5
60.7	1.1
40.5	0.7
20.2	0.4
0.0	0.0

Sainte-Rose Water Station	
Water Output (kL/hour)	Electrical Input(kW)
274.0	5.0
182.6	3.3
91.3	1.7
45.7	0.8
0.0	0.0

Bouillante Water Station	
Water Output (kL/hour)	Electrical Input(kW)
50.0	0.9
33.3	0.6
25.0	0.5
10	0.2
0	0.0

Vieux-Habitants Water Station	
Water Output (kL/hour)	Electrical Input(kW)
141.7	2.6
106.3	1.9
70.9	1.3
35.4	0.6
0.0	0.0

Baillif Water Station	
Water Output (kL/hour)	Electrical Input(kW)
30.0	0.5
22.5	0.4
15.0	0.3
7.5	0.1
0.0	0.0

Saint-Claude Station	
Water Output (kL/hour)	Electrical Input(kW)
350.0	6.4
262.5	4.8
175.0	3.2
87.5	1.6
0.0	0.0

Gourbeyre Water Station	
Water Output (kL/hour)	Electrical Input(kW)
75.0	1.4
56.3	1.0
37.5	0.7
18.8	0.3
0.0	0.0

Pointe-a-Pitre Emergency Room		
Patient Output	Water Input (kL)	Electrical Input (kW)
18	18	432
15	15	360
10	10	240
5	5	120
0	0	0

Pointe-a-Pitre Accommodation		
Beds	Water Input (kL)	Electrical Input (kW)
641	417	4872
481	312	3654
321	208	2436
160	104	1218
0	0	0

Pointe-Noire Emergency Room		
Patient Output	Water Input (kL)	Electrical Input (kW)
0.5	0.5	12
0.4	0.4	9.6
0.3	0.3	7.2
0.2	0.2	4.8
0	0	0

Pointe-Noire Accommodation		
Beds	Water Input (kL)	Electrical Input (kW)
103	67	783
77	50	587
52	33	391
26	17	196
0	0	0

Baie-Mahault Emergency Room		
Patient Output	Water Input (kL)	Electrical Input (kW)
5	5	120
4	4	96
3	3	72
1	1	24
0	0	0

Baie-Mahault Accommodation		
Beds	Water Input (kL)	Electrical Input (kW)
153	99	1163
115	75	872
77	50	581
38	25	291
0	0	0

Capesterre Emergency Room		
Patient Output	Water Input (kL)	Electrical Input (kW)
0.5	0.5	12
0.4	0.4	9.6
0.2	0.2	4.8
0.1	0.1	2.4
0	0	0

Capesterre Accommodation		
Beds	Water Input (kL)	Electrical Input (kW)
49	32	372
37	24	279
25	16	186
12	8	93
0	0	0

Bouillante Emergency Room		
Patient Output	Water Input (kL)	Electrical Input (kW)
2	2	48
1.5	1.5	36
1	1	24
0.5	0.5	12
0	0	0

Bouillante Accommodation		
Beds	Water Input (kL)	Electrical Input (kW)
125	81	950
94	61	713
63	41	475
31	20	238
0	0	0

St-Claud Emergency Room		
Patient Output	Water Input (kL)	Electrical Input (kW)
1	1	24
0.75	0.75	18
0.5	0.5	12
0.25	0.25	6
0	0	0

St-Claud Accommodation		
Beds	Water Input (kL)	Electrical Input (kW)
87	57	661
65	42	496
44	28	331
22	14	165
0	0	0

Basse-Terre Hospital Emergency Room		
Patient Output	Water Input (kL)	Electrical Input (kW)
7.5	7.5	180
5	5	120
3	3	72
1	1	24
0	0	0

Basse-Terre Hospital Accommodation		
Beds	Water Input (kL)	Electrical Input (kW)
252	164	1915
189	123	1436
126	82	958
63	41	479
0	0	0

Basse-Terre Clinic Emergency Room		
Patient Output	Water Input (kL)	Electrical Input (kW)
1.2	1.2	28.8
1	1	24
0.7	0.7	16.8
0.3	0.3	7.2
0	0	0

Basse-Terre Clinic Accommodation		
Beds	Water Input (kL)	Electrical Input (kW)
70	46	532
53	34	399
35	23	266
18	11	133
0	0	0

Trois-Rivières Accommodation		
Beds	Water Input (kL)	Electrical Input (kW)
60	39	456
45	29	342
30	20	228
15	10	114
0	0	0

Basse-Terre		
Accommodation (inhabitants)	electrical input (kW)	water input (kL/day)
14522	2396	2832
14187	2341	2767
13947	1841	2176
12446	616	747

Baie-Mahault		
Accommodation (inhabitants)	electrical input (kW)	water input (kL/day)
28069	4631	6624
27029	4460	6379
26266	3467	4959
21642	1071	1299

Goyave		
Accommodation (inhabitants)	electrical input (kW)	water input (kL/day)
10273	1695	2424
10053	1659	2372
9896	1306	1868
8819	437	529

Deshaie		
Accommodation (inhabitants)	electrical input (kW)	water input (kL/day)
5697	940	1350
3718	613	881
2900	383	550
1287	64	77

Lamentin		
Accommodation (inhabitants)	electrical input (kW)	water input (kL/day)
16467	2717	2701
15101	2492	2477
14197	1874	1863
10113	501	607

Bouillante		
Accommodation (inhabitants)	electrical input (kW)	water input (kL/day)
9971	1645	1765
8843	1459	1565
8178	1079	1158
5622	278	337

Sainte-Rose		
Accommodation (inhabitants)	electrical input (kW)	water input (kL/day)
20426	3370	5392
17402	2871	4594
15646	2065	3304
9710	481	583

Pointe-Noire		
Accommodation (inhabitants)	electrical input (kW)	water input (kL/day)
11835	1953	2095
8112	1338	1436
6508	859	921
3132	155	188

Saint-Claude		
Accommodation (inhabitants)	electrical input (kW)	water input (kL/day)
12305	2030	2399
12133	2002	2366
11996	1583	1871
10797	534	648

Capesterre		
Accommodation (inhabitants)	electrical input (kW)	water input (kL/day)
25569	4219	6034
25348	4182	5982
25168	3322	4752
23408	1159	1404

Gourbeyre		
Accommodation (inhabitants)	electrical input (kW)	water input (kL/day)
8629	1424	1683
8546	1410	1667
8481	1120	1323
7881	390	473

Baillif		
Accommodation (inhabitants)	electrical input (kW)	water input (kL/day)
6853	1131	1336
6691	1104	1305
6568	867	1025
5668	281	340

Vieux Fort		
Accommodation (inhabitants)	electrical input (kW)	water input (kL/day)
1477	244	225
1469	242	223
1463	193	178
1389	69	83

Petit-Bourg		
Accommodation (inhabitants)	electrical input (kW)	water input (kL/day)
24579	4055	5801
23478	3874	5541
22699	2996	4286
18253	904	1095

Trois-rivière		
Accommodation (inhabitants)	electrical input (kW)	water input (kL/day)
10502	1733	2594
10445	1723	2580
10396	1372	2054
9857	488	591

Vieux habitants		
Accommodation (inhabitants)	electrical input (kW)	water input (kL/day)
8783	1449	1555
8427	1391	1492
8174	1079	1157
6664	330	400

Road Segment Data

start node	end node	ID	level	speed (km/h)	Delay (min/km)	Distance(km)	Total Delay (min)	level of traffic	Physical Mode			
									state t- 0h	state 3h	state 24 h	state 7day
1	2	1R2	1	90	0.67	0.64	0.43	3	1	1	1	0
1	3	1R1	1	90	0.67	4.88	3.25	5	1	1	0	0
1	201	1R3	2	70	0.86	0.39	0.33	3	0	0	0	0
2	35	2R2	1	90	0.67	0.35	0.23	5	2	2	1	0
2	202	2R1	2	70	0.86	6.01	5.15	1	1	0	0	0
3	4	3R2	1	90	0.67	5.35	3.56	5	1	0	0	0
3	203	3R1	3	50	1.20	3.87	4.64	2	1	0	0	0
4	5	4R1	2	70	0.86	1.70	1.46	1	1	0	0	0
4	6	4R2	1	90	0.67	1.00	0.67	5	0	0	0	0
4	40	4R3	2	70	0.86	6.80	5.83	2	1	1	0	0
5	6	5R1	2	70	0.86	1.10	0.94	3	1	1	0	0
5	7	5R2	2	70	0.86	2.15	1.84	3	0	0	0	0
6	7	6R2	1	90	0.67	1.80	1.20	5	1	0	0	0
6	9	6R1	2	70	0.86	4.24	3.63	2	1	1	1	0
7	8	7R1	1	90	0.67	2.15	1.43	5	0	0	0	0
8	14	8R1	1	90	0.67	1.67	1.11	5	0	0	0	0
8	10	8R2	1	90	0.67	1.12	0.75	3	1	1	0	0
9	16	9R1	2	70	0.86	3.02	2.59	2	1	1	0	0
9	19	9R2	3	50	1.20	5.44	6.53	1	1	1	0	0
10	11	10R1	1	90	0.67	0.23	0.15	5	0	0	0	0
10	12	10R2	1	90	0.67	0.46	0.31	5	0	0	0	0
11	12	11R2	1	90	0.67	0.50	0.33	5	0	0	0	0
11	14	11R1	1	90	0.67	1.35	0.90	3	1	1	0	0
11	211	11R3	1	90	0.67	1.10	0.73	5	1	1	0	0
12	13	12R1	1	90	0.67	0.65	0.43	5	0	0	0	0

start node	end node	ID	level	speed (km/h)	Delay (min/km)	Distance(km)	Total Delay (min)	level of traffic	Physical Mode	start node	end node	ID
13	213	13R2	1	90	0.67	1.90	1.27	5	2	1	0	0
14	214	14R1	1	90	0.67	0.65	0.43		1	1	0	0
15	16	15R1	2	70	0.86	0.35	0.30	2	0	0	0	0
15	17	15R2	1	90	0.67	0.60	0.40	5	0	0	0	0
16	17	16R1	3	50	1.20	0.40	0.48	2	0	0	0	0
17	18	17R2	1	90	0.67	1.88	1.25	5	0	0	0	0
17	19	17R1	1	90	0.67	6.50	4.33	4	0	0	0	0
18	41	18R1	1	90	0.67	0.43	0.29	5	1	0	0	0
18	118	18R2	2	70	0.86	6.36	5.45	2	1	1	0	0
19	20	19R2	1	90	0.67	11.56	7.71	3	1	1	1	0
19	40	19R1	2	70	0.86	1.60	1.37	2	1	1	0	0
19	118	19R3	2	70	0.86	1.72	1.47	2	2	1	1	0
20	21	20r2	3	50	1.20	5.91	7.09	3	1	2	2	2
20	220	20r1	1	90	0.67	1.73	1.15	1	0	2	1	1
21	22	21r1	1	90	0.67	2.51	1.67	3	1	1	0	0
22	23	22r1	3	50	1.20	0.81	0.97	1	0	0	0	0
22	25	22r2	1	90	0.67	0.85	0.57	3	0	0	0	0
23	24	23r2	3	50	1.20	0.71	0.85	1	2	2	1	0
23	123	23r1	3	50	1.20	1.76	2.11	1	1	1	1	0
24	25	24r1	3	50	1.20	2.19	2.63	1	0	0	0	0
24	123	24r2	3	50	1.20	1.00	1.20	1	1	1	0	0
25	26	25r1	1	90	0.67	0.61	0.41	3	0	0	0	0
26	27	26r2	1	90	0.67	0.78	0.52	3	0	0	0	0
26	226	26r1	3	50	1.20	5.28	6.34	2	1	1	1	0
27	28	27r1	1	90	0.67	0.72	0.48	3	1	1	0	0
27	28	27r2	1	90	0.67	0.85	0.57	1	1	0	0	0
28	29	28r1	1	90	0.67	0.72	0.48	2	1	0	0	0

start node	end node	ID	level	speed (km/h)	Delay (min/km)	Distance(km)	Total Delay (min)	level of traffic	Physical Mode	start node	end node	ID
29	129	29r1	1	90	0.67	2.57	1.71	3	0	0	0	0
30	31	30r1	1	90	0.67	8.60	5.73	3	1	1	0	0
30	129	30r2	1	90	0.67	2.30	1.53	3	1	1	0	0
31	32	31r1	1	90	0.67	0.44	0.29	3	0	0	0	0
31	32	31r2	1	90	0.67	0.52	0.35	3	2	1	0	0
32	33	32r1	1	90	0.67	1.68	1.12	3	0	0	0	0
33	34	33r1	2	70	0.86	9.55	8.19	2	1	1	0	0
33	34	33r2	1	90	0.67	8.40	5.60	3	2	2	2	1
34	35	34r1	1	90	0.67	3.46	2.31	3	1	1	0	0
35	201	35r1	2	70	0.86	0.60	0.51	1	1	1	0	0
40	240	40r1	3	50	1.20	1.21	1.45	1	1	1	0	0
41	42	41r2	1	90	0.67	3.93	2.62	5	0	0	0	0
41	241	41r1	1	90	0.67	1.92	1.28	3	0	0	0	0
42	43	42r2	1	90	0.67	1.17	0.78	2	0	0	0	0
42	44	42r1	1	90	0.67	2.95	1.97	5	0	0	0	0
42	46	42r3	3	50	1.20	0.53	0.64	1	0	0	0	0
42	241	42r4	1	90	0.67	2.40	1.60	3	0	0	0	0
43	44	43r1	1	90	0.67	2.19	1.46	2	0	0	0	0
43	45	43r2	3	50	1.20	1.98	2.38	1	0	0	0	0
44	47	44r1	2	70	0.86	1.42	1.22	2	0	0	0	0
44	48	44r2	1	90	0.67	1.54	1.03	5	0	0	0	0
45	46	45r1	3	50	1.20	1.05	1.26	1	0	0	0	0
45	245	45r2	3	50	1.20	2.11	2.53	1	0	0	0	0
46	245	46r1	3	50	1.20	3.56	4.27	1	0	0	0	0
47	48	47r2	3	50	1.20	0.68	0.82	1	2	1	0	0
47	49	47r1	2	70	0.86	4.25	3.64	2	0	0	0	0
48	49	48r1	1	90	0.67	3.00	2.00	5	0	0	0	0

start node	end node	ID	level	speed (km/h)	Delay (min/km)	Distance(km)	Total Delay (min)	level of traffic	Physical Mode	start node	end node	ID
50	51	50r1	1	90	0.67	1.87	1.25	1	0	0	0	0
50	51	50r2	1	90	0.67	1.43	0.95	5	0	0	0	0
51	52	51r1	1	90	0.67	3.40	2.27	5	0	0	0	0
52	53	52r1	1	90	0.67	0.88	0.59	1	0	0	0	0
52	53	52r2	1	90	0.67	0.93	0.62	5	0	0	0	0
53	54	53r2	1	90	0.67	4.15	2.77	5	1	1	0	0
53	253	53r1	2	70	0.86	6.20	5.31	3	0	0	0	0
54	55	54r2	1	90	0.67	1.76	1.17	5	0	0	0	0
54	254	54r1	2	70	0.86	8.30	7.11	2	0	0	0	0
55	56	55r2	1	90	0.67	4.17	2.78	5	0	0	0	0
55	57	55r1	2	70	0.86	6.16	5.28	1	0	0	0	0
56	57	56r1	1	90	0.67	0.60	0.40	5	0	0	0	0
56	59	56r2	1	90	0.67	2.76	1.84	3	0	0	0	0
57	58	57r1	1	90	0.67	3.70	2.47	5	0	0	0	0
57	257	57r2	3	50	1.20	2.26	2.71	1	0	0	0	0
58	60	58r1	3	50	1.20	2.60	3.12	1	0	0	0	0
58	62	58r2	1	90	0.67	1.21	0.81	5	0	0	0	0
59	60	59r2	1	90	0.67	0.78	0.52	3	0	0	0	0
59	259	59r1	2	70	0.86	0.97	0.83	1	0	0	0	0
60	61	60r1	1	90	0.67	0.60	0.40	3	0	0	0	0
61	64	61r2	1	90	0.67	4.11	2.74	2	0	0	0	0
61	161	61r1	2	70	0.86	7.37	6.32	3	0	0	0	0
62	63	62r2	1	90	0.67	1.17	0.78	5	0	0	0	0
62	63	62r1	3	50	1.20	1.36	1.63	1	0	0	0	0
63	64	63r2	3	50	1.20	0.95	1.14	1	0	0	0	0
63	65	63r1	1	90	0.67	1.39	0.92	5	0	0	0	0
64	65	64r1	1	90	0.67	0.88	0.59	2	1	1	0	0

start node	end node	ID	level	speed (km/h)	Delay (min/km)	Distance(km)	Total Delay (min)	level of traffic	Physical Mode	start node	end node	ID
65	67	65r1	1	90	0.67	1.51	1.01	5	0	0	0	0
66	67	66r2	2	70	0.86	0.27	0.23	1	0	0	0	0
66	266	66r1	3	50	1.20	5.57	6.68	1	0	0	0	0
67	68	67r1	1	90	0.67	0.96	0.64	5	0	0	0	0
68	70	68r2	1	90	0.67	3.10	2.07	5	0	0	0	0
68	74	68r1	2	70	0.86	1.37	1.17	4	0	0	0	0
70	71	70r2	1	90	0.67	0.71	0.47	4	0	0	0	0
70	72	70r1	1	90	0.67	1.01	0.67	5	0	0	0	0
70	161	70r3	2	70	0.86	5.84	5.01	3	0	0	0	0
71	74	71r2	2	70	0.86	3.36	2.88	4	0	0	0	0
71	73	71r1	1	90	0.67	0.53	0.35	5	0	0	0	0
72	73	72r2	1	90	0.67	0.42	0.28	5	0	0	0	0
72	80	72r1	1	90	0.67	1.92	1.28	4	0	0	0	0
73	174	73r1	1	90	0.67	1.97	1.32	4	0	0	0	0
73	174	73r2	1	90	0.67	2.30	1.53	5	0	0	0	0
74	76	74r1	2	70	0.86	3.30	2.83	4	0	0	0	0
75	76	75r2	1	90	0.67	1.84	1.23	5	0	0	0	0
75	80	75r1	2	70	0.86	4.02	3.45	3	0	0	0	0
75	174	75r3	1	90	0.67	1.48	0.98	5	0	0	0	0
76	77	76r2	2	70	0.86	2.43	2.08	3	0	0	0	0
76	276	76r1	2	70	0.86	7.00	6.00	1	0	0	0	0
77	78	77r1	2	70	0.86	1.05	0.90	3	1	1	0	0
77	277	77r2	3	50	1.20	1.82	2.18	1	0	0	0	0
78	79	78r2	2	70	0.86	8.90	7.63	2	0	0	0	0
78	278	78r1	3	50	1.20	1.32	1.58	1	0	0	0	0
79	80	79r1	1	90	0.67	0.86	0.57	3	0	0	0	0
79	81	79r2	1	90	0.67	2.38	1.59	4	0	0	0	0

start node	end node	ID	level	speed (km/h)	Delay (min/km)	Distance(km)	Total Delay (min)	level of traffic	Physical Mode	start node	end node	ID
81	83	81r2	1	90	0.67	3.66	2.44	4	0	0	0	0
82	83	82r2	2	70	0.86	1.12	0.96	1	0	0	0	0
82	84	82r1	2	70	0.86	2.35	2.01	3	0	0	0	0
83	84	83r1	1	90	0.67	2.66	1.77	4	0	0	0	0
84	85	84r1	1	90	0.67	0.56	0.37	4	0	0	0	0
85	86	85r1	1	90	0.67	6.31	4.21	4	1	1	0	0
85	285	85r2	3	50	1.20	7.00	8.40	1	0	0	0	0
86	87	86r2	1	90	0.67	6.80	4.53	4	1	1	0	0
86	286	86r1	3	50	1.20	6.33	7.60	1	0	0	0	0
87	88	87r2	1	90	0.67	2.56	1.71	3	1	0	0	0
87	287	87r1	3	50	1.20	3.20	3.84	1	0	0	0	0
88	21	88r2	1	90	0.67	5.11	3.41	3	0	0	0	0
88	288	88r1	3	50	1.20	3.00	3.60	1	1	1	0	0

Water Pipe Data			
Start	Destination	ID	Physical Mode
Petit-Bourg Station	Baie-Mahault Station	PBtoBM	2
Baie-Mahault Station	Baie-Mahault Clinic	BMtoBMC	1
Baie-Mahault Station	Baie-Mahault Town	BMtoBMT	2
Petit-Bourg Station	Lamentin Station	PBtoL	1
Petit-Bourg Station	Goyave Town	PBtoG	0
Capesterre-Belle-Eau Station	Goyave Town	CBEtoG	0
Ste-Rose Station	Ste-Rose Town	RosetoRoseT	1
Ste-Rose Station	Deshaie	RosetoDeshaie	3
Ste-Rose Station	Lamentin Station	RosetoLamentin	2
Deshaie Station	Deshaie Town	DtoDT	5
Pointe-noire Station	Pointe-noire Station	DtoPN	4
Deshaie Station	Ste-Rose Station	DtoRose	3
Pointe-noire Station	Pointe-noire Town	PNtoPNT	3
Pointe-noire Station	Pointe-noire Hospital	PNtoPNH	4
Pointe-noire Station	Bouillante Station	PNtoB	2
Pointe-noire Station	Deshaie Station	PNtoD	3
Bouillante Station	Bouillante Town	BtoBT	3
Bouillante Station	Bouillante Hospital	BtoBH	1
Bouillante Station	Pointe-noire	BtoPN	1
Bouillante Station	Vieux habitants	BtoVH	1
Vieux-Habitants Station	Vieux habitants Town	VHtoVHT	1
Vieux-Habitants Station	Bouillante	VHtoBoui	1
Vieux-Habitants Station	Baillif	VHtoBail	1
St-Claude	St-Claude Town	SCtoSCT	1
Basse-Terre	Basse-Terre Town	BasToBasT	1
Basse-Terre	Basse-Terre Hospital	BasToBasH	1
Basse-Terre	Basse-Terre Clinic	BasToBasC	1
Basse-Terre	Baillif	BasToBail	1
Basse-Terre	St-Claude	BasToCl	1
Basse-Terre	Gourbeyre	BasToG	1
Baillif	Baillif Town	BailToBailT	1
Baillif	Vieux habitants	BailToVH	1
Baillif	Basse-Terre	BailToBT	1
Gourbeyre	Gourbeyre Town	GtoGT	1
Gourbeyre	Basse-Terre	GtoBT	1

Start	Destination	ID	Physical Mode
Gourbeyre	Trois-Rivieres	GtoT	1
Trois-Rivieres	Trois-Rivieres Town	TRtoTRT	1
Trois-Rivieres	Trois-Rivieres Clinic	TRtoTRC	1
Trois-Rivieres	Les Saintes	TRtoLST	1
Trois-Rivieres	Vieux fort	TRtoVF	1
Trois-Rivieres	Gourbeyre	TRtoG	1
Trois-Rivieres	Capesterre-Belle-Eau Station	TRtoCBE	1
Petit-Bourg Station	Pointe-A-Pitre Station	PBtoPAP	1
Pointe-A-Pitre Station	Pointe-A-Pitre Town	PAPtoPAPT	1
Pointe-A-Pitre Station	Pointe-A-PitreHosptal	PAPtoPAPH	1

Infrastructure Physical Mode	
Infrastructure	PM
Petit-Bourg Station (water)	2
Capesterre-Belle-Eau Station(water)	1
Ste-Rose Station (water)	4
Deshaies Station (water)	3
Pointe Noire Station (water)	4
Bouillante Station (water)	3
Vieux-Habitants Station (water)	1
St Claude Station (water)	1
Baillif Station (water)	1
Gourbeyre Station (water)	1
Trois-Rivieres Station (water)	1
Bouillante (Elec)	2
Gourbeyre(Elec)	1
Capesterre-Belle-Eau (Elec)	1
Baie-Mahault (Elec)	1
Baie-MahaultA (Elec)	1
Ste-Rose (Elec)	2
PointeaPitre(hospital)	1
PointeNoire (hospital)	1
BaieMahault(hospital)	1
Capesterre(hospital)	1
Bouillante(hospital)	2
Saint Claude(hospital)	1
Basse-Terre Hospital	1
Basse Terre clinic	1
Troisriviere clinic	1

Appendix B: Distributor Ratios

Substation Distribution Ratio (Normal Operation)			
Substation	Power Production(MW)	Destination	Ratio
Bouillante Station	15000	Bouillante	17.31
		Pointe	18.25
		Vieux habitants	9.68
		Rose Station	0.00
		Gourbeyre Station	54.77
		BaieMahaultA Station	0.00
Bouillante (area)		Bouillante Hospital	36.59
		Bouillante Water	0.04
		Bouillante Town	63.37
Pointe(area)		Pointe Hospital	28.60
		Pointe Water	0.05
		Pointe Town	71.34
Vieux habitants(area)		Vieux habitants Water	0.18
		Vieux habitants Town	99.82
Rose Station(area)		Rose Station-A	50.00
		Rose Station-B	50.00
Gourbeyre Station	12612	Basse	38.40
		Claude	21.39
		Trois	17.38
		Vieux Fort	1.93
		Gourbeyre	11.30
		Baillif	8.97
		Bouillante Station	0.00
		Capesterre Station	0.63
Basse(area)		Basse Town	49.47
		Basse Hospital	39.54
		Basse Clinic	10.98
		Basse Water	0.00
Claude(area)		Claude Town	75.26
		Claude Clinic	24.51
		Claude Water	0.24
Trois(area)		Trois Town	79.07
		Trois Clinic	20.81
		Trois Water	0.12

Vieux Fort(area)		Vieux Fort Town	100.00
		Vieus Fort Water	0.00
Gourbeyre(area)		Gourbeyre Town	99.90
		Gourbeyre Water	0.10
Baillif(area)		Baillif Town	99.96
		Baillif Water	0.04
Capesterre-Belle-Eau Station	10300	Capesterre	44.57
		Goyave	16.62
		Gourbeyre Station	38.81
		Baie-Mahault Station	0.00
Capesterre(area)		Capesterre Town	91.56
		Capesterre Hospital	8.07
		Capesterre Water	0.37
Goyave(area)		Goyave Town	100.00
		Goyave Water	0.00
Baie-Mahault Station	17961	Baie-Mahault	32.26
		Petit-Bourg	22.69
		Lamentin	15.13
		Bouillante Station	0.00
		BaieMahualt A Station	0.00
		Ste-Rose Station	29.93
Baie-Mahault(area)		Baie-Mahault Town	79.93
		Baie-Mahault Clinic	20.07
		Baie-Mahault Water	0.00
Petit-Bourg(area)		Petit-Bourg Town	99.51
		Petit-Bourg Water	0.49
Lamentin(area)		Lamentin Town	100.00
		Lamentin Water	0.00
Baie-Mahault A Station	252200	Baie-Mahault A	0.00
		Pointe-à-Pitre	1.93
		Capesterre Station	0.00
		Baie-Mahault Station	0.50
		System	98.07
Baie-Mahult A(area)		Baie-Mahault Town	0.00
		Baie-Mahault Clinic	0.00
		Baie-Mahault Water	100.00
Pointe-à-Pitre (area)		Pointe-à-Pitre Town	0.00

		Pointe-à-Pitre Hospital	100.00
Ste- Rose Station	5375.1	Ste-Rose	62.79
		Deshaies	17.51
		Bouillante Station	0.00
		Baie-Mahault Station	19.70
Ste-Rose(area)		Ste-Rose Town	99.85
		Ste-Rose Water	0.15
Deshaies(area)		Deshaies Town	99.89
		Deshaies Water	0.11

Water Station Distribution Ratio (Normal Operation)				
Water Station	Destination	Dist Ratio (%)	Need(Litre)	Production+From Others(Litre)
		1.00	1	
Petit-Bourg Station	Baie-Mahult	25.55	6744	26400
	Lamentin	10.23	2701	
	Goyave	9.18	2424	
	Petit-Bourg	21.97	5801	
	Into System	31.23	8244	
	Pointe-A-Pitre	1.64	432	
	Storage	0.20		
Baie-Mahult	Baie-Mahult Town	98.22	6624	
	Baie-Mahult Clinic	1.78	120	
Capesterre Station	Into System	72.86	16284	22350
	Capesterre	27.14	6066	
	Trois-rivière	0.00		
	Goyave	0.00		
	Storage	0.00	0	
Capesterre	Capesterre Town	99.47	6034	
	Capesterre Hospital	0.53	32	
Ste-Rose Station	Ste-Rose	82.01	5392	6575
	Lamentin	0.00		
	Deshaie	5.57	366	
	Storage	12.43	817	

Deshaie Station	Deshaie	78.95	1350	1710
	Pointe-noire	21.05	360	
	Ste-Rose	0.00		
	Storage	0.00	0	
Pointe-noire Station	Bouillante	6.08	140	2302
	Pointe-noire	93.92	2162	
	Deshaie	0.00		
	Storage	0.00	0	
Pointe-noire	Pointe-noire Town	96.90	2095	
	Pointe Noire Hospital	3.10	67	
Bouillante Station	Bouillante	100.00	1846	1846
	Pointe-noire	0.00		
	Vieux habitants	0.00		
	Storage	0.00	0	
Bouillante	Bouillante Town	95.61	1765	
	Bouillante Hospital	4.39	81	
Vieux habitants Station	Vieux habitants	45.72	1555	3401
	Bouillante	14.88	506	
	Baillif	0.00		
	Storage	39.40	1340	
St-Claude Station	St-Claude	29.36	2456	8400
	Basse-Terre	43.88	3686	
	Storage	26.76	2248	
St-Claude	St-Claude Town	97.68	2399	
	St-Claude Clinic	2.32	57	
Basse-Terre Station	Basse-Terre	83.29	3070	3686
	Baillif	16.71	616	
	St Claude	0.00		
	Gourbeyre	0.00		
	Storage	0.00	0	

Basse-Terre	Basse-Terre Town	92.25	2832	
	Basse-Terre Hospital	5.93	182	
	Basse-Terre Clinc	1.82	46	
Baillif Station	Baillif Town	100.00	1336	1336
	Vieux habitants	0.00		
	Basse-Terre	0.00		
	Storage	0.00	0	
Gourbeyre Station	Gourbeyre	93.50	1683	1800
	Basse-Terre	0.00		
	Trois-Rivieres	0.00		
	Storage	6.50	117	
Trois-Rivieres Station	Trois-Rivieres	72.73	2633	3620
	Les Saintes	16.57	600	
	Vieux-Fort	6.22	225	
	Gourbeyre	0.00		
	Capesterre-Belle-Eau	0.00		
	Storage	4.48	162	
Trois-Rivieres	Trois-Rivieres Town	98.52	2594	
	Trois-Rivieres Clinic	1.48	39	